CR- 86176

DEVELOPMENT OF A COLOR DISPLAY CAPABILITY

By Richard Gagan, Frederick Garside
Lee Metrick, and Albert Shortell

October 1968

Prepared under Contract No. NAS 12-680 by

WOLF RESEARCH AND DEVELOPMENT CORPORATION

Concord, Massachusetts

Electronics Research Center

NATIONAL AERONAUTICS AND SPACE ADMINISTRATION

Mr. David Kipping
Technical Monitor
NAS 12-680
Electronics Research Center
575 Technology Square
Cambridge, Massachusetts 02139

"Requests for copies of this report should be referred to:

NASA Scientific and Technical Information Facility
P. O. Box 39, College Park, Maryland 20740"

PRECEDING PAGE BLANK NOT FILMED.

CONTENTS

ILLUSTRATIONS

ILLUSTRATIONS CONT'D. Page

DEVELOPMENT OF
A COLOR DISPLAY
CAPABILITY

By Richard Gagan, Frederick Garside,
Lee Metrick, and Albert Shortell

Wolf Research and Development Corporation
Concord, Massachusetts

SUMMARY

A full color display capability has been developed for existing computer equipment at the NASA-ERC Computer Research Laboratory. The existing equipment included a general purpose digital computer, and a color display oscilloscope comprised of analog driving circuits and a tricolor shadow-mask cathode-ray tube. Interface equipment was designed and constructed. Connection of the equipment involved several modifications of existing equipment. Methods were developed for convenient usage in the specification of display colors. These methods accommodate color specification in terms of hue, saturation, and richness; permit incremental changes of coordinates; and provide for automatic transformation of coordinates to the three-color gun intensities required by the equipment. These methods were incorporated in computer output utility routines which were added to existing graphics software in a compatible fashion.

INTRODUCTION

Early in 1968 the Computer Research Laboratory of the National Aeronautics and Space Administration's Electronics Research Center (NASA-ERC) had a requirement to connect an existing International Telephone and Telegraph Corporation (ITT) KM906 Color Display Oscilloscope to the Information Displays, Incorporated (IDI) display controller associated with their Honeywell DDP-516 computer. Based on an unsolicited proposal, unique experience with computer-driven color displays, and proprietary color specification ideas, the Wolf Research and Development Corporation (WOLF) was awarded a sole-source contract to perform this engineering work, and to provide computer display utility programs which would be compatible with existing graphics software and which would enhance the convenience of using the color display. The work has been completed and is described in this report.

The section "ON THE USE OF COLOR DISPLAYS" discusses the problem of convenience in color specification; develops a shadow-mask cathode-ray tube (CRT)-compatible color reference system incorporating hue as one parameter; discusses alternative reference systems; and suggests an algorithmic approach for coordinate transformation. Because of its concern with a basic problem, this section should be of fairly wide interest.

The following two sections, "EQUIPMENT ENGINEERING" and "COMPUTER SOFTWARE" contain technical details which will be best appreciated by those with appropriate training or experience. Likewise, "RECOMMENDATIONS, " and the "APPENDICES" are intended for various lasses of technical readership.

The "BIBLIOGRAPHY" section cites previous work and sources of information relevant to the design and development of computer-driven color displays.

APPENDIX H cites original developments as required by the New Technology clause in the contract.

ON THE USE OF COLOR DISPLAYS

Given the computer equipment for producing color displays with a tri-color shadow-mask cathode-ray tube (the color television receiver "picture tube" used in this country), a major problem that arises is the typical inconvenience of its use.

Problem Discussion

Shadow-mask tube colors are perceptually integrated mixtures of visual output from red, green, and blue phosphor deposits. These primary color phosphors are energized by three electron guns. Intensity signals to the guns originate in circuits which may accept color specifications in an arbitrary reference system: television color signals, for example, consist of two chrominance signals and a luminance signal, the characteristics of which are designed to enhance flesh-tone reproduction, fine detail perception, and compatibility with monochrome receivers. However, in at least three of five known cases where the shadow-mask tube has been adapted for computer output, circuits for this sort of function are not provided.[1] Rather, the computer user is given direct control over gun intensities. At greater than two intensity levels per gun ("on" and "off"), a large number of color mixtures becomes possible and the need arises for a conceptually convenient reference system. Note however, that a finite set of discrete mixtures is produced by digital equipment (as suggested in the Frontispiece illustration) rather than continuous chromaticity which is characteristic of analog systems, such as television.

---

[1] The three cases being DEC equipment (installed at AFCRL and Project MAC), ITT equipment (as at NASA/ERC), and IBM experimental equipment at Kingston, New York. GE is developing color display equipment for NASA, of which the referenced statement is suspected to be true also. W. J. Beninghof of Northeastern University has modified a color TV receiver for computer display which may modulate chrominance and luminance.

Assuming that binary codes in computer display commands provide the means for gun intensity control, the assigned number of bit positions per gun determines the number of intensity levels, n, a power of two. The n^3 color mixtures may be represented graphically as lattice intersection points in a Cartesian coordinate cube, as Figure 1 illustrates for the n = 4 case. This cube concept might be useful when simultaneously color coding the values of three variables, but more frequently a one-dimensional scale will be required, as when color coding the values of one variable. Experience shows that the cube is a poor conceptual model for this use.[2] It is inadequate in respect to orientation cues, as Figure 2 suggests, and proficiency in the use of this reference system might come only after much training.

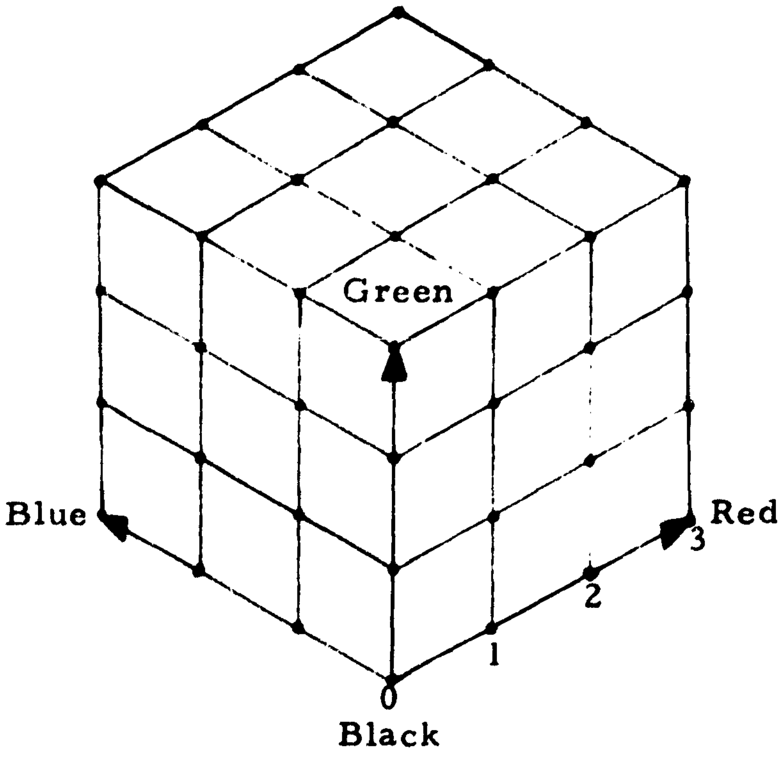

FIGURE 1. SYSTEM OF TRICOLOR INTENSITY COMBINATIONS

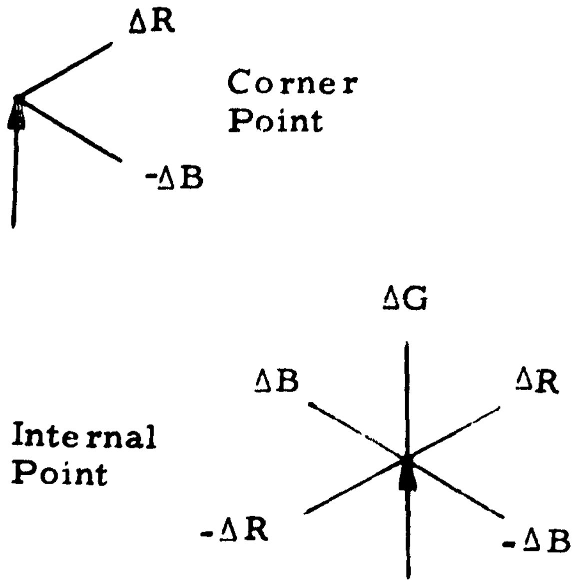

FIGURE 2. EXTREME EXAMPLES OF BRANCHING OPTIONS

---

[2] The experience cited was acquired under a series of contracts with the Dynamic Processes Branch, AFCRL, and NAS 5-9756-47 with NASA-GSFC. Several ideas inherent in the present development stem from that experience.

Perhaps the strongest color orientation cue is the hue parameter in the well-known sequence of the visible spectrum. A color reference system based on hue is shown in Figure 3. This system, like the television and cube specification schemes, is three-dimensional. It differs from the television scheme mainly in its handling of chromaticity: polar coordinates are employed to accommodate the use of hue.

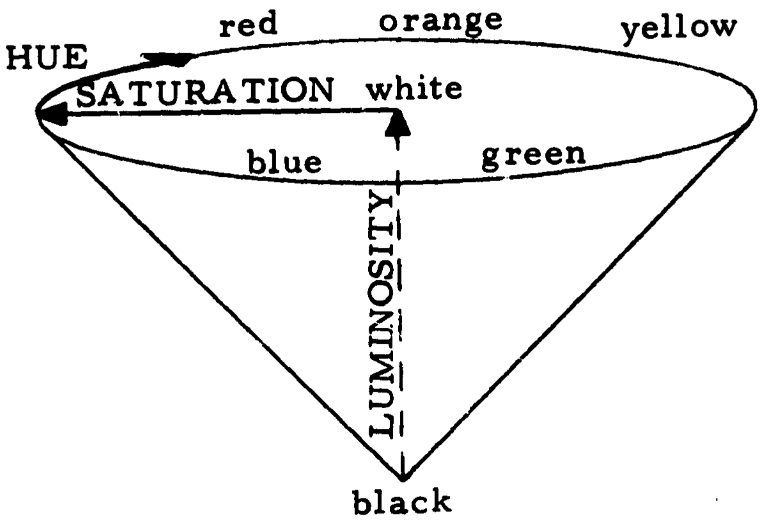

FIGURE 3. A HUE-ORIENTED COLOR REFERENCE SYSTEM

A technique has been developed to permit color specification in a hue-oriented reference system such as this, and to provide for automatic coordinate transformation to the primary color intensities required by the shadow-mask tube. The technical approach, the development of which was partially sponsored under the present contract, is further described on the next few pages. Implementation of the technique, as fully sponsored under this contract, is described in a later section.

A Reference System for Color Specification

The origin of the color cube in Figure 1 is a corner point with red, green, blue intensitities 0, 0, 0. When displayed this combination appears "black". The diagonally opposite corner point 3, 3, 3 appears white. Looking at the white corner in line with the white to black axis one sees three cu faces, the projection of which is a hexagon, as in Figure 4. The corners and center of this hexagon may be labeled with red, green, blue intensity values, or hue names, as shown. Mapping the top surface of the Figure 3 color s l onto this projection is a straightforward matter, with saturation measured radially from the white point and hue along hexagonal paths. It may be observed that this surface contains the richest possible set of color mixtures in the least attenuation of intensity sense, and that there are $3n(n-1)+1$ of these mixtures, which for small values of n (2, or 4) is over half of n^3.

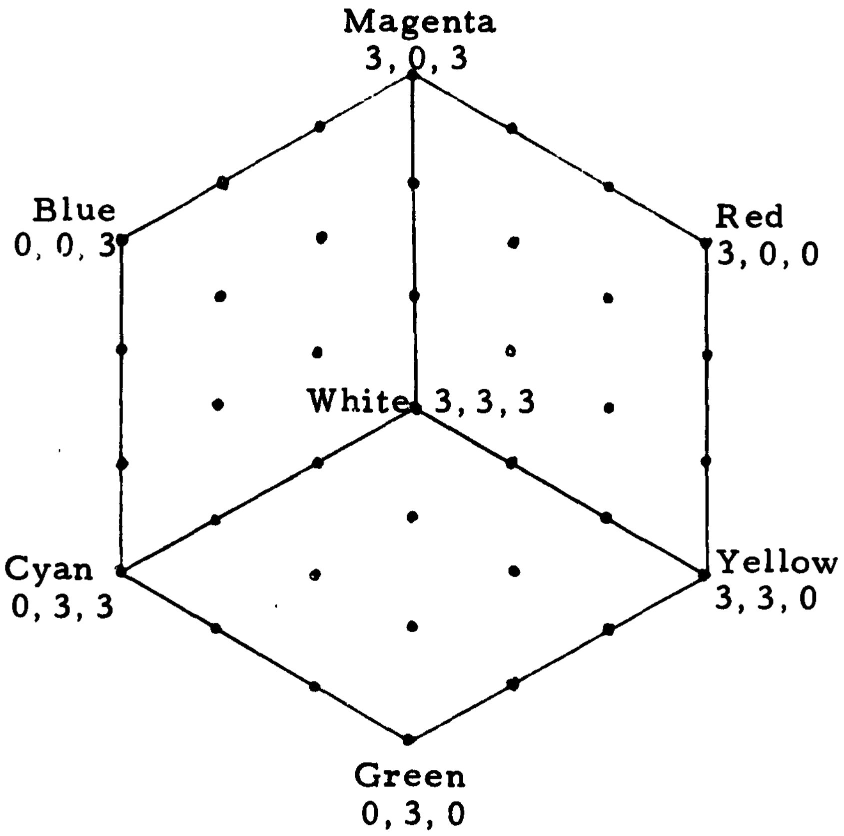

FIGURE 4. TOP-VIEW OF COLOR CUBE

To continue the mapping process, let us remove this shell of three faces from the cube; project the next smaller nested shell; and repeat until reaching the "black" corner limit, thus producing a set of constant "richness" surfaces as shown in Figure 5. This arrangement of the n^3 color mixtures suggests the following coordinate numbering scheme as one possibility.

- Starting at 0, 0, 0, number the constant richness surfaces from 0 through n-1.
- Starting at surface center points, number the constant saturation rings from 0 through (surface number).
- Starting at magenta (pseudo-infrared), number the points on the outer ring of surface n-1 clockwise with hue values in increments of 60/(n-1) degrees. For n $\neq$ 2, 4 or 16, fractional parts of a degree result, and a serial count from 1 through 6(n-1) may be preferable.

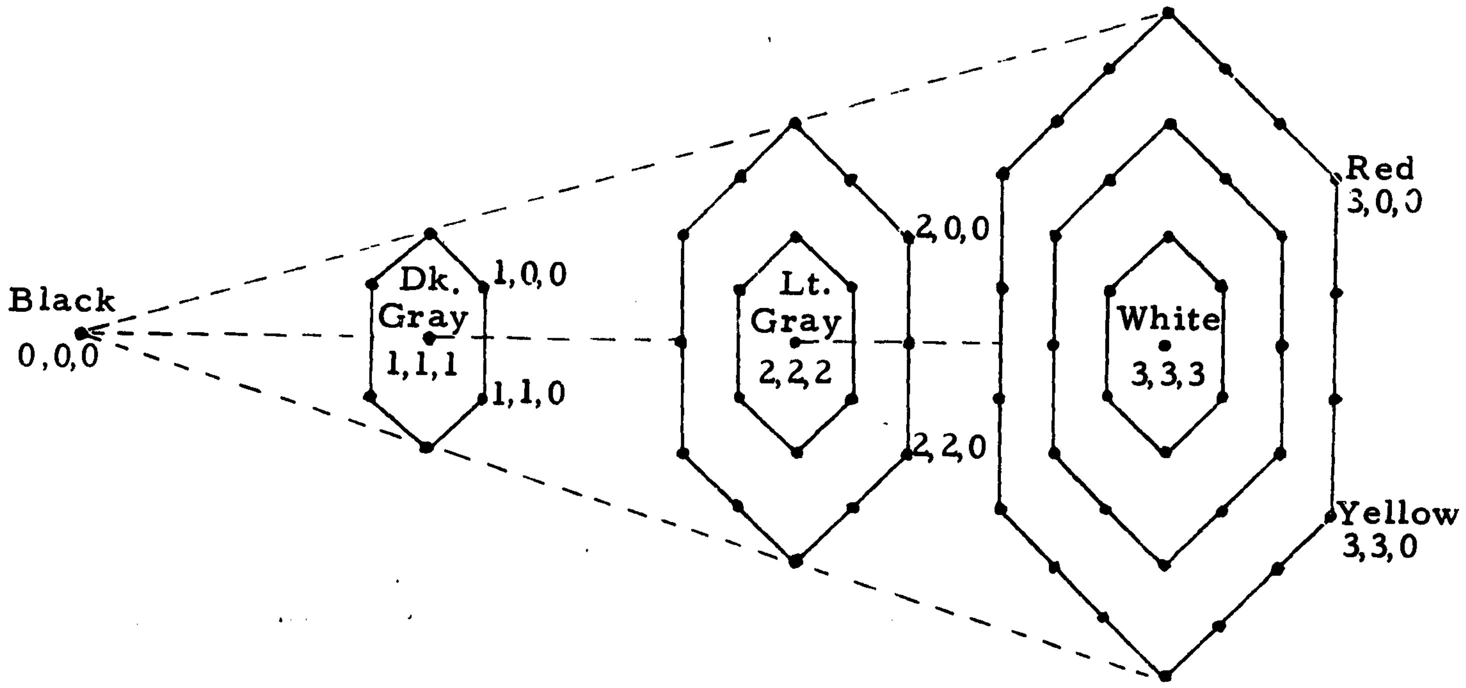

FIGURE 5. COLOR MIXTURES IN CONSTANT RICHNESS SURFACES

Let hue, saturation, and richness be expressed in the format HHH, S, R. If each point is assigned one of the 6(n-1) values of HHH, ambiguities arise as suggested by the arbitrary "constant hue" lines from 280, 3, 3 and 260, 3, 3 to the center point in Figure 6: point (270), 2, 3 must be labeled 280, 2, 3 or 260, 2, 3, for example, and any of the eighteen values may be assigned to HHH, 0, 3. The requirement for a value of HHH in specifying any point facilitates point changing by S increments. Lower valued R surfaces may be treated as subsets of R = n-1 because of their similar geometry, but decrementing R can produce an invalid label, such as 060, 3, 2, requiring rejection or conversion to a valid value.

Except for decisions regarding the handling of invalid coordinates and the equality definition of constant hue for the set of S values, this establishes a shadow-mask tube color reference system which incorporates hue as one parameter.

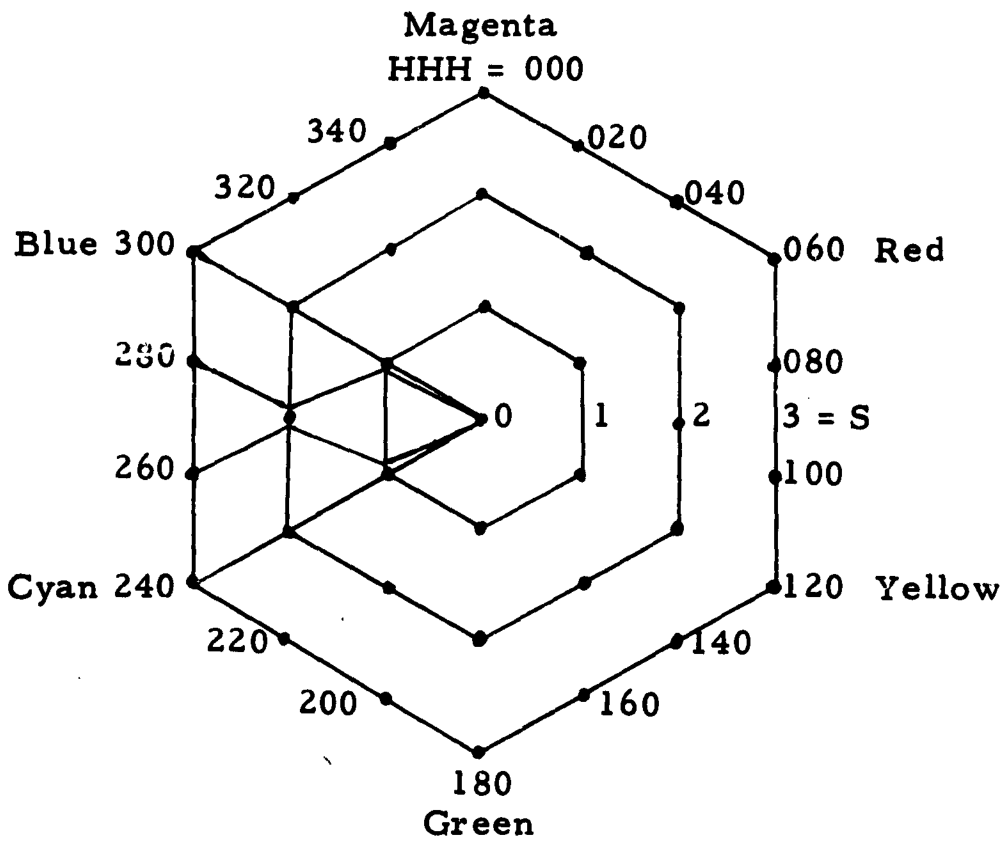

FIGURE 6. R=n-1 HUE AND SATURATION DIAGRAM

Rejected Alternatives

The use of another commonly accepted color solid for mapping, as in Figure 7, leads to two alternative organizations of color mixtures.

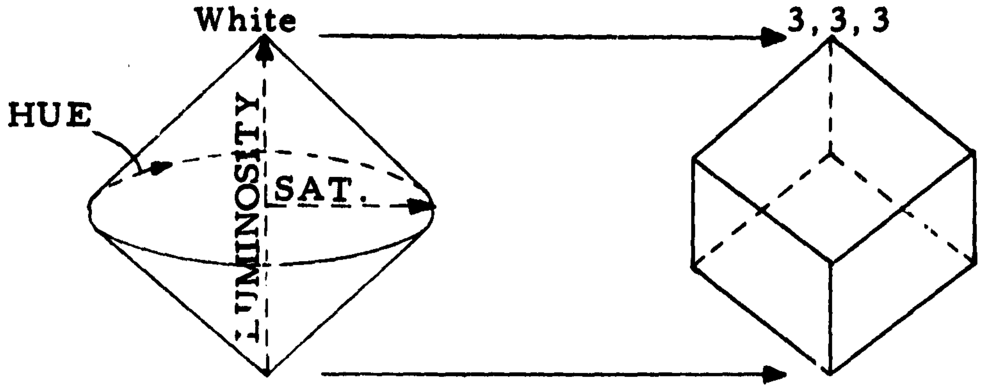

FIGURE 7. SECOND MAPPING APPROACH

If the cube points are organized in parallel planes for which the black to white diagonal is the perpendicular central axis, all points in a plane will have common intensity sums (e.g., the first plane beyond "black" fits points 1, 0, 0; 0, 1, 0; and 0, 0, 1). Assuming equal response from the three phosphors and integrated light output, the planes would represent constant luminosity; but the various hues on the maximum saturation circle do not map onto a single plane. A second alternative then, would be nested shells of maximum chromaticity. Figure 8 illustrates the two schemes.

FIGURE 8. CONSTANT LUMINOSITY AND MAXIMUM CHROMATICITY

Figure 9 shows the set of planes produced by the first alternative; Figure 10 shows the projections resulting from the second. Again, the n=4 case is used as the example.

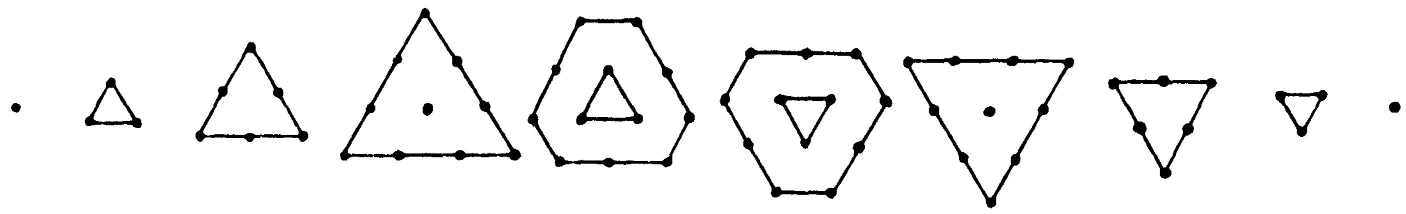

FIGURE 9. CONSTANT LUMINOSITY SECTIONS

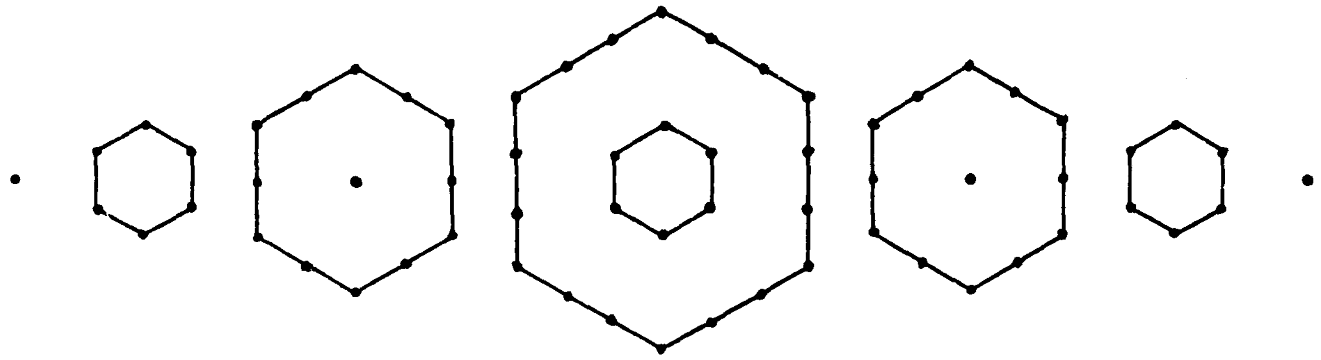

FIGURE 10. MAXIMUM CHROMATICITY PROJECTIONS

It may be observed that the original organization of color mixtures shown in Figure 5 consists of fewer surfaces and, therefore, offers more chromaticity per surface than either alternative. Also, the geometry of that set is more uniform, permitting simpler coordinate numbering and usage rules. For these reasons the second mapping approach and its two alternative schemes may be rejected.

Coordinate Transformation

Several methods are possible for transforming HHH, S, R coordinates to red, green, blue intensities. The following discussion is not intended for the n=2 case, which is trivial.

Table look-up affords ease of modification during development stages when matters such as "constant hue" lines are being resolved.

Exhaustive geometrical tracing is probably not desirable in any circumstance.

The following observations might be developed further to arrive at a hardware or software implemented algorithm.

(1) for HHH^o = 000 to 120, 120 to 240, 240 to 000,
$R \rightarrow I_{red}$, I_{green}, I_{blue},

(2) for HHH^o = 180 to 300, 300 to 060, 060 to 180,
$R-S \rightarrow I_{red}$, I_{green}, I_{blue},

(3) when HHH^o= 000, 060, 120, 180, 240, 300,
the remaining intensity value has been determined,

(4) for other HHH^o values, determination of the remaining intensity value will depend on the convention adopted for specifying hue.

Notice To Users

The conventions used in this section, such as for HHH coding, were selected for expositional convenience. In the later section on computer software and in appendix F it will be seen that differences exist in the set of conventions adopted for implementation. Users of the computer programs are accordingly cautioned against employing this section as a reference for conventions.

EQUIPMENT ENGINEERING

The NASA-ERC Computer Research Laboratory's Honeywell DDP-516 computer system includes a display system type CM 10133 manufactured by Information Displays, Inc., 333 North Bedford Rd., Mount Kisco, N. Y. In order to produce color displays with this equipment it was desired to connect this IDI system to an existing KM906 Color Display Oscilloscope, manufactured by International Telephone and Telegraph Corporation, 15191 Bledsoe Street, San Fernando, California

The connection of the IDI and ITT equipment could not be made directly because of signal differences of amplitude level and impedance. Accordingly, an interface assembly was designed, constructed, and installed by WOLF under this contract.

Display Generator Assembly

The IDI Display Generator Assembly is shown in simplified block diagram form in figure 11.

The Display Generator Assembly is contained in a metal enclosure which provides mounting and electrical connections and power supplies for the solid state circuitry which interfaces with the Honeywell DDP-516, and provides control and generation of all display functions. The display functions available are line segments, vectors, circles, incremental dots and characters. However, due to lack of provisions within the Color Display Assembly, as necessary for character displays, automatic character generation is not available with the Color Display Assembly.

Distribution Assembly

The Distribution Assembly within the display generator provides control of video and deflection information which can be applied to as many as four display devices. The assembly comprises six Video Line Drivers, two X and Y Line Drivers and two character X and Y Line Drivers.

Video and deflection signals are applied to a display device through associated Video and X - Y Line Drivers (figure 12). Each Video Line Driver

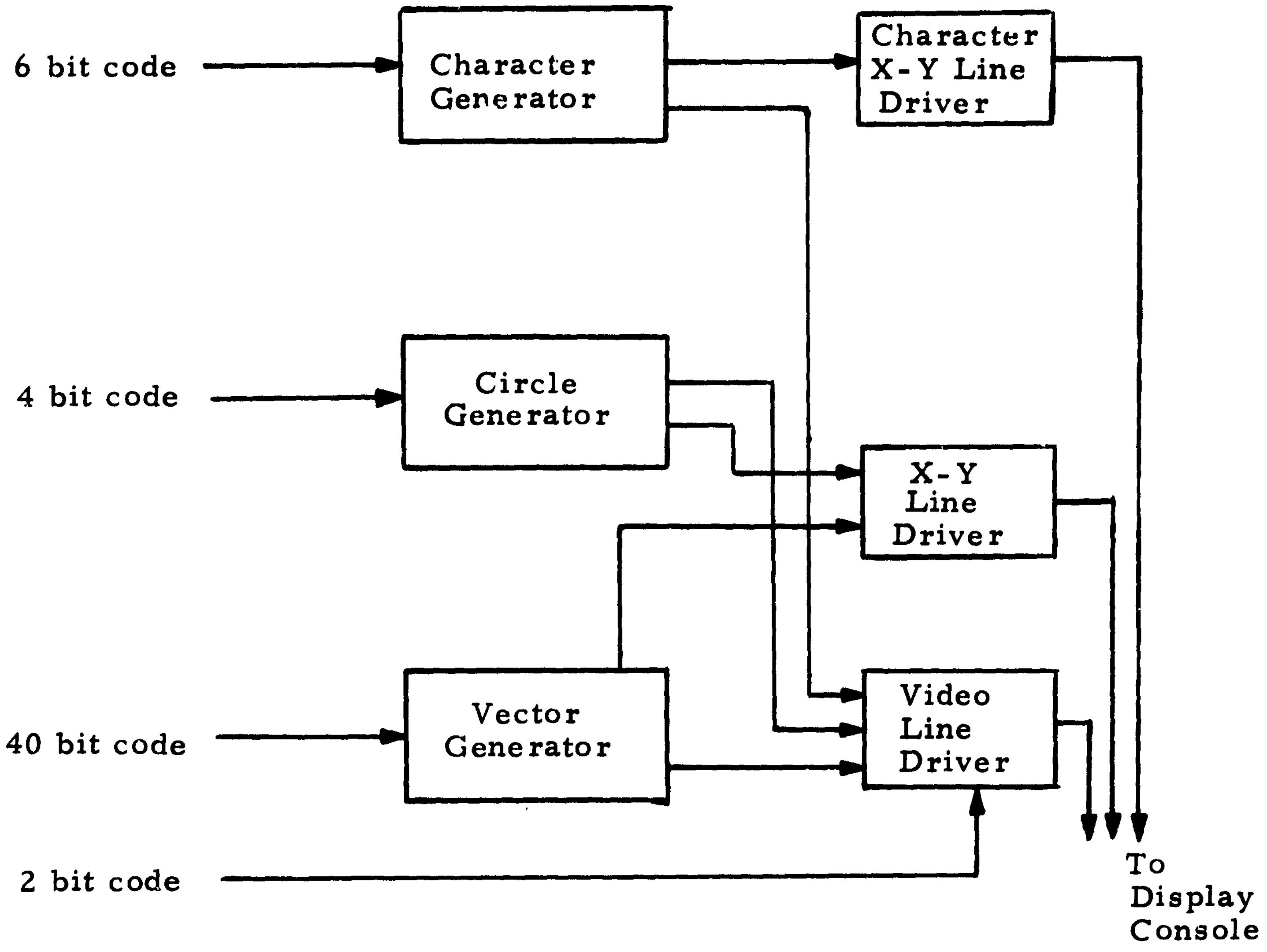

FIGURE 11. IDI DISPLAY GENERATOR, SIMPLIFIED DIAGRAM

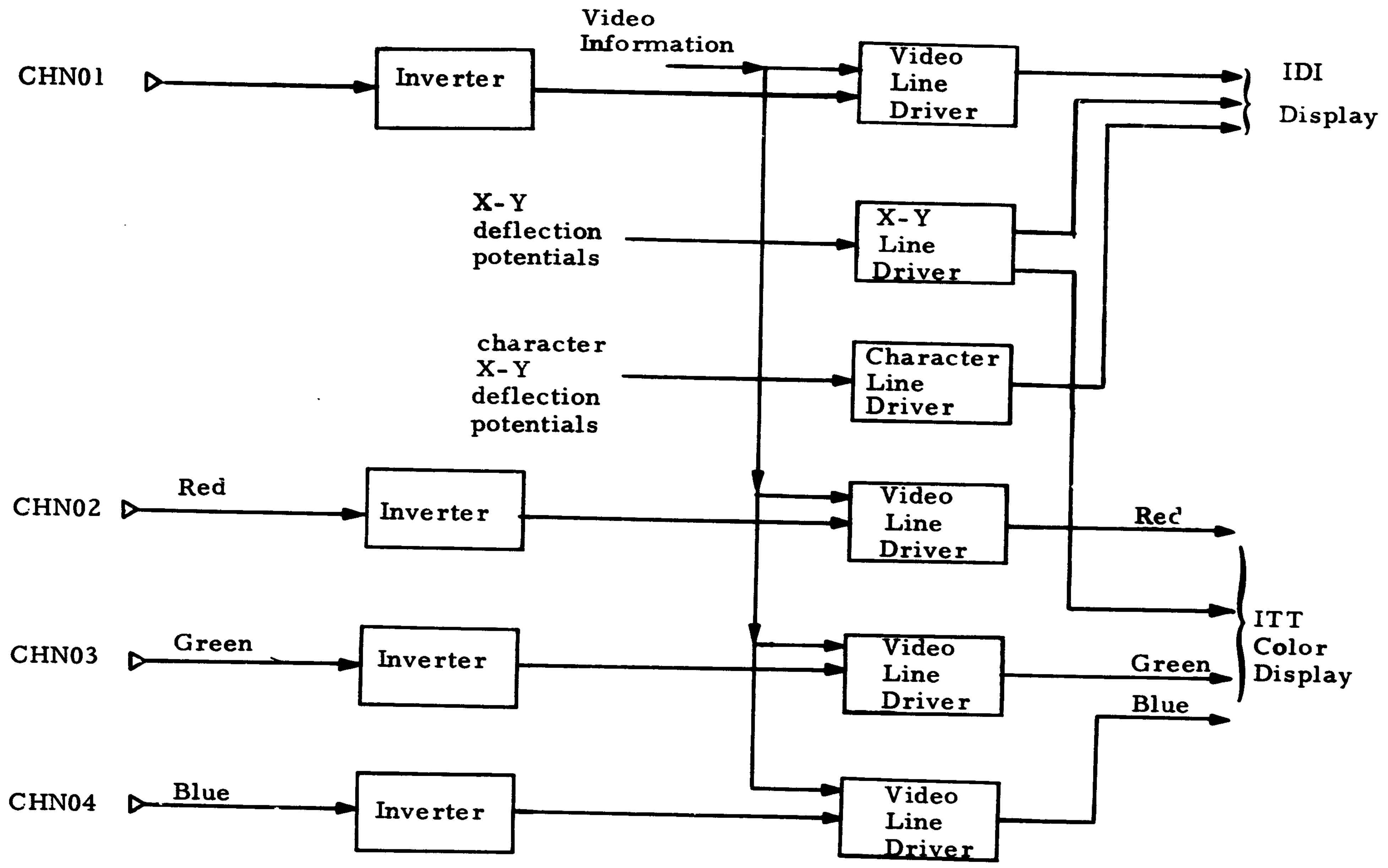

FIGURE 12. DISTRIBUTION ASSEMBLY, SIMPLIFIED DIAGRAM

has an inhibit input from an associated NOR Gate which serves as an inverter circuit. Inputs to the inverters are enabled by signals CHN01 through CHN04 which are decoded from bits 04 through 07 of a Load Control Register word. The IDI black and white display scope utilizes CHN01 and the ITT color display (needing 3 intensification lines) presently utilizes CHN02 through CHN04. The black and white scope receives position and character deflection potentials, and associated video data. The color scope receives position deflection and three channels of video data but is not capable of generating characters automatically. When signals CHN01 through CHN04 are generated, any one or all four video line drivers can be enabled depending upon the applied Load Control Register word.

Figure 13 illustrates the time relationship between the deflection signals and the intensification signals generated by the Display Generator Assembly. In the full length vector case the bottom trace shows the intensification signal required to activate each CRT gun. This figure also shows the rise and fall times of the signals, which were measured in order to define the maximum slewing rates during the selection of color scope interface operational amplifiers. The short vector waveforms are similar with the exception of amplitude of the X deflection signal. These signals generate a one inch vector.

Figure 14 shows the Y deflection and intensification signals which will produce three vertical vectors of different intensification levels (horizontally spaced) on the CRT.

Interface Assembly

The Interface Assembly comprises a metal enclosure with mounting and electrical connections and solid state circuitry which interfaces the Color Display Assembly with the Display Generator Assembly (top photograph, figure 15).

The Interface Assembly consists of two operational amplifiers mounted on printed circuit plug-in boards inserted in a mounting panel (middle photograph, figure 15) which contains power supply and coaxial cable connectors

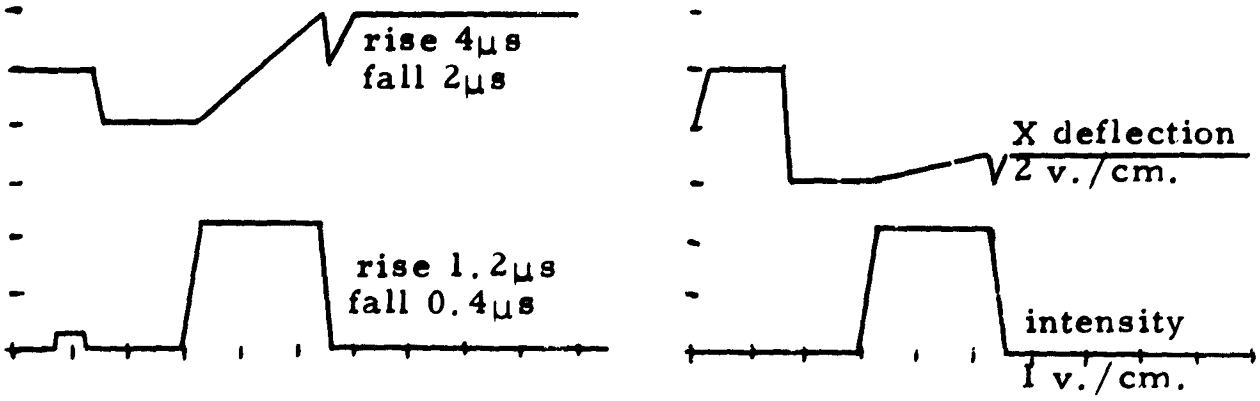

Full Length Vector Short Vector
(horizontal calibration 20μsec./centimeter)

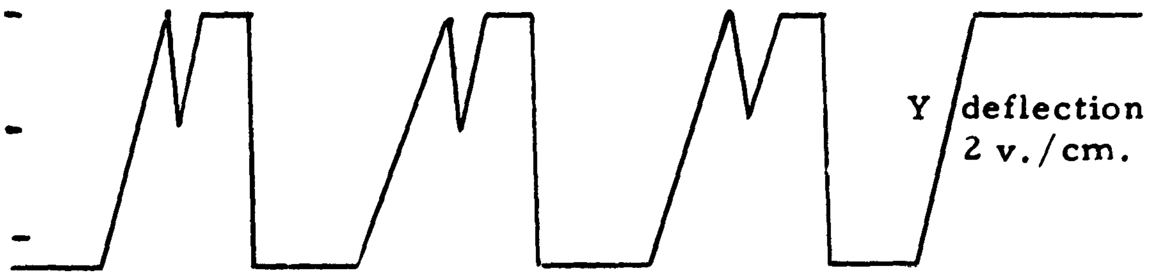

FIGURE 13. DISPLAY GENERATOR OUTPUT WAVEFORMS

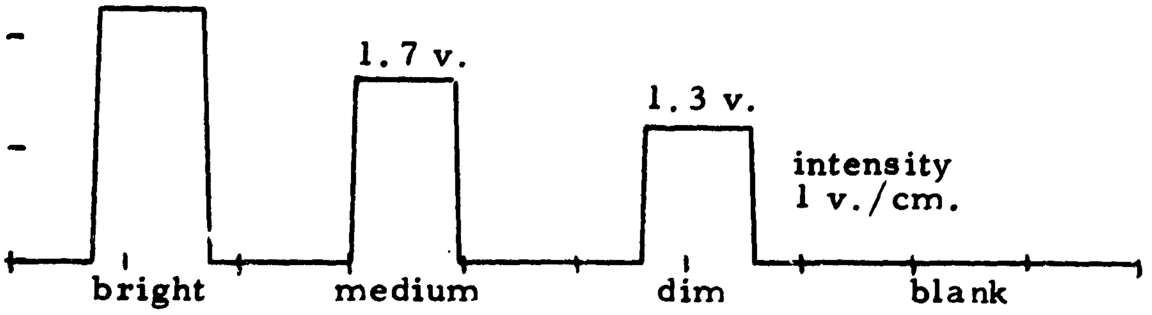

FIGURE 14. FOUR INTENSIFICATION LEVEL WAVEFORMS

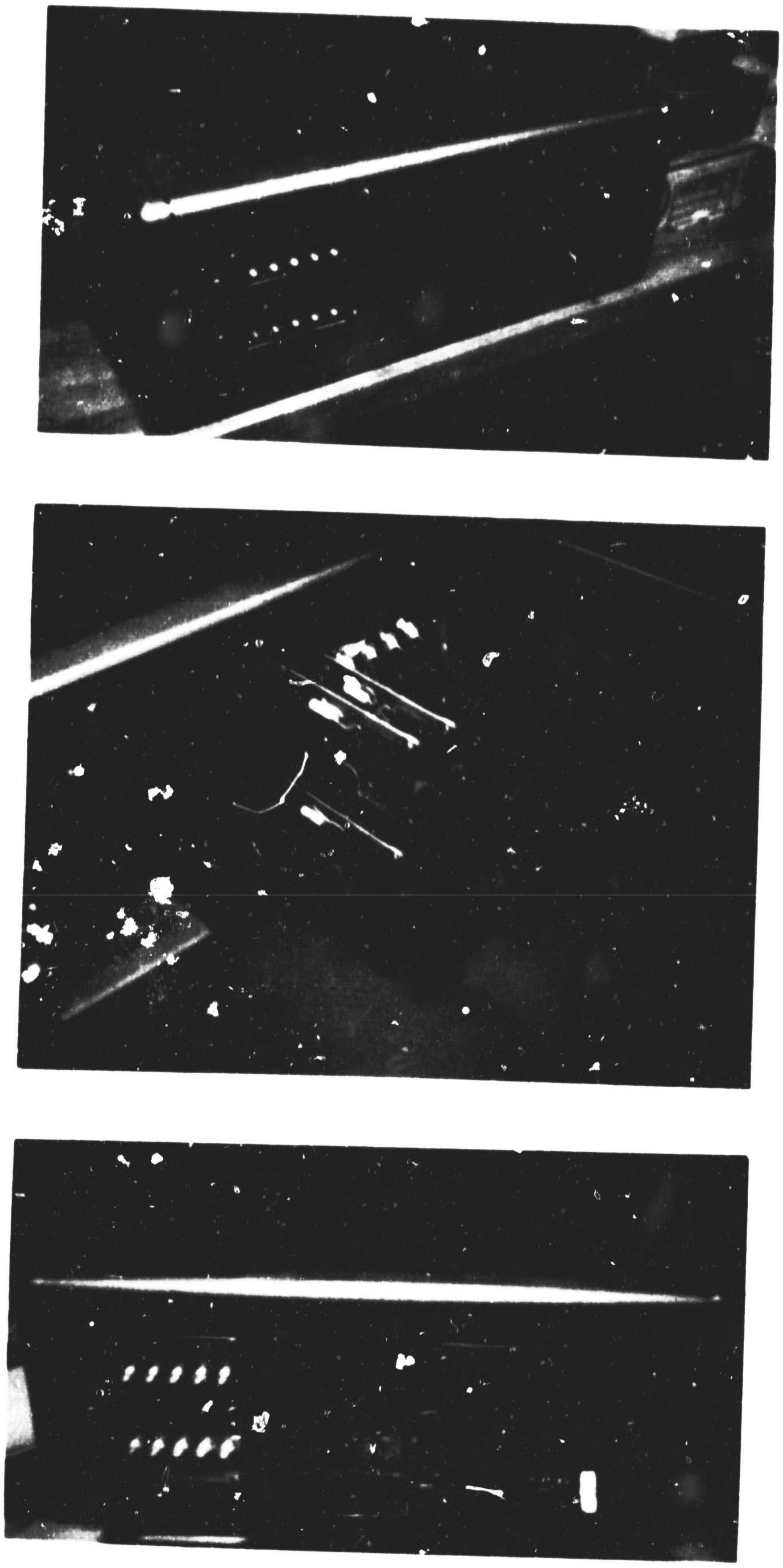

FIGURE 15. THE INTERFACE ASSEMBLY

(bottom photograph, figure 15) for signals to and from the amplifiers. The operational amplifiers used were chosen for their wide bandwidth, high slewing rate and fast settling time. Also mounted on these boards are cable terminators, amplifier input resistors, and gain and balance potentiometers.

The block diagram of the Interface Assembly (figure 16) shows a power supply which supplies a regulated ± 15 V.D.C. to the operational amplifiers. Below the power supply are the two operational amplifiers used to increase the X and Y signal gains from the IDI display generator to the ITT color display scope. The 100 ohm resistors shown at their inputs properly terminate the IDI display generator output. The "gain adjust" potentiometers provide for adjustment of the output amplitude in order to deflect the color display in X and Y to full screen. Below the operational amplifiers are the three sets of connectors for the intensification signals. This cabling contains no attenuation or termination since the IDI Display Generator output and ITT Color Display input are compatible.

High accuracy can generally be obtained with the inverting amplifier, (figure 17) since, unlike the non-inverting amplifier (figure 18), one input is normally grounded, so there are no common mode voltage errors. For AC amplifiers, the lowest distortion can be obtained in the inverting mode since common mode voltage errors also introduce distortion. This was a consideration for good response to the sinusoidal signals presented by the IDI display generator for generating circles on the display. The inverting amplifier also exhibits a wider bandwidth with a low input impedance. This is the case in the interfacing of the IDI display generator and the ITT scope. The IDI display generator output is 100 ohms, consequently, using the inverting configuration, the input impedance of the amplifier is low and the bandwidth is high.

Color Display Assembly

The Color Display Assembly comprises two metal enclosures. One of these provides mounting and electrical connections for the following subassemblies: Horizontal (X) and Vertical (Y) deflection amplifiers, Intensification amplifiers, High Voltage Power supply, Convergence circuitry and a

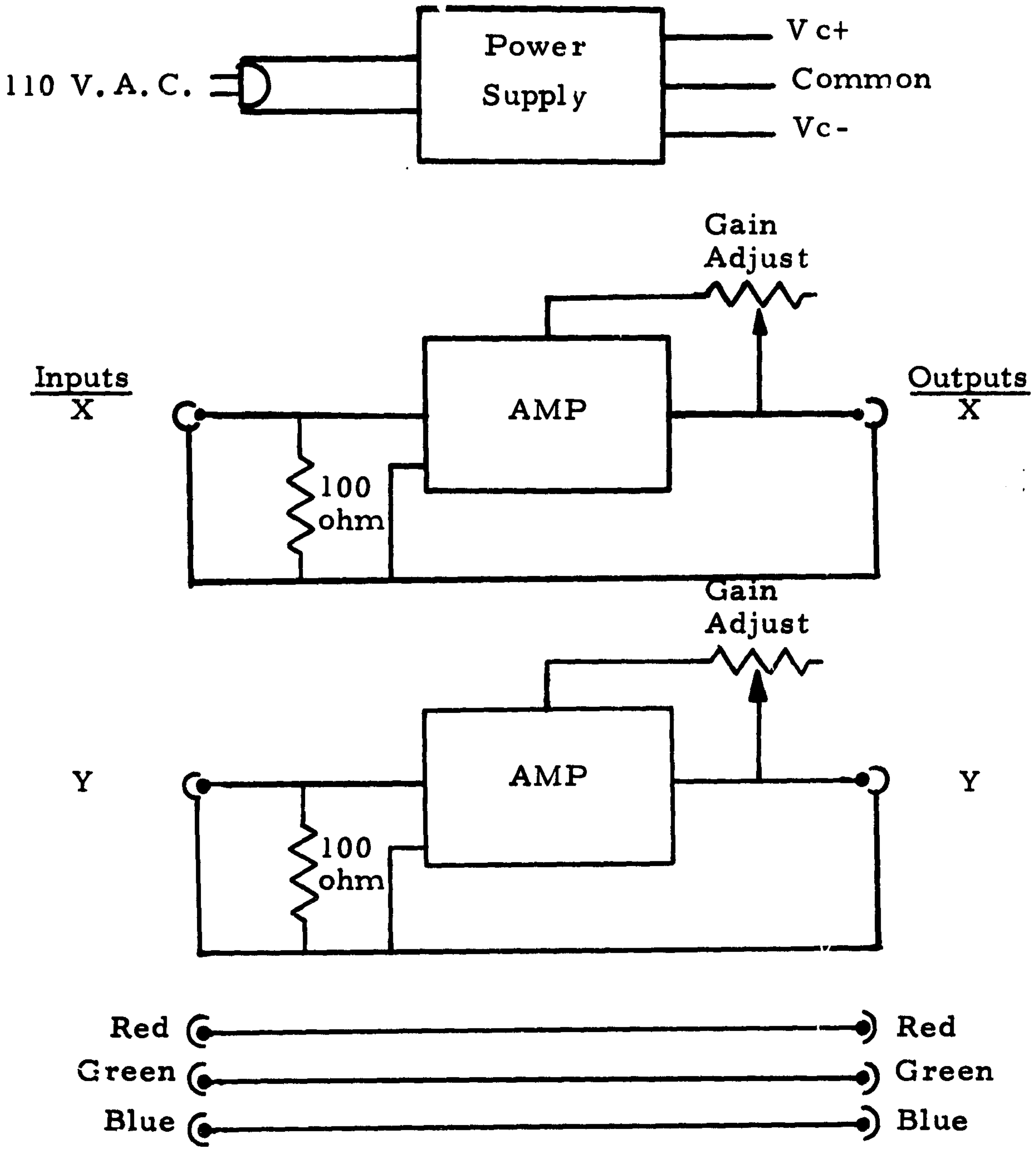

FIGURE 16. BLOCK DIAGRAM, INTERFACE ASSEMBLY

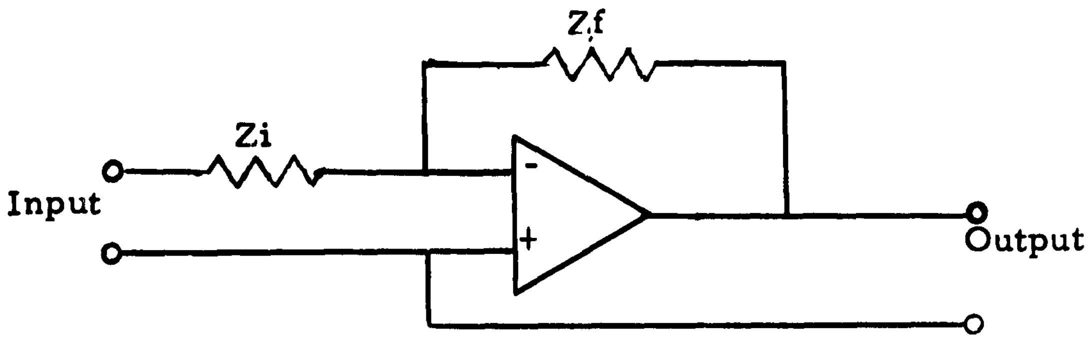

FIGURE 17. INVERTING AMPLIFIER CONFIGURATION

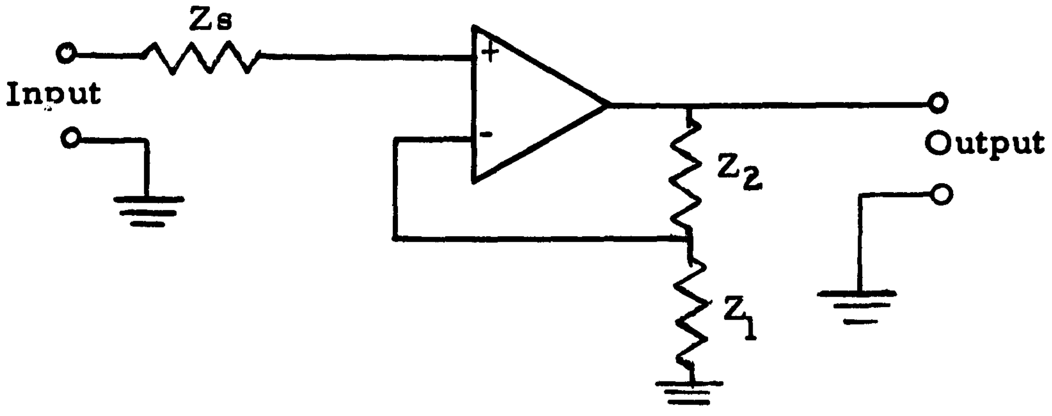

FIGURE 18. NON-INVERTING AMPLIFIER CONFIGURATION

three gun shadow-mask color display tube (Sylvania type RE19EYP22). The other enclosure contains low voltage power supplies for the solid state circuitry of the Color Display Assembly.

The color display analog system (figure 19) controls beam positioning, beam convergence and beam intensification of the 3-gun, shadow-mask CRT. A sequence of digital X and Y addresses, supplied by the IDI display generator, controls the positioning of the beam on the CRT face. The beam convergence system provides static and dynamic control of the beams from the 3-gun assembly causing the beams to converge over the entire CRT screen. The intensification assembly provides selection of the 3 beams independently in such a way as to produce various color combinations.

The X and Y deflection amplifiers are comprised of solid state preamplifiers and power amplifiers used to deflect the CRT beam for display purposes. These amplifiers require an input voltage of one (1) volt per inch of deflection. The usable display raster area is ten (10) inches square, and accordingly, ten (10) volts is needed for full X or full Y deflection. Since the center of the display area is considered zero, the applied voltage for full scale X or full scale Y deflection is plus or minus five volts. The Intensification Amplifiers are solid state devices used to turn on the three guns of the color display tube independently in response to signals from the Display Generator Assembly. Each input requires 0 to 5 milliamperes of current. These signals are program selectable and are supplied to the Color Display Assembly in four discrete amplitudes. The higher the amplitude of the signal, the greater the intensity of the beam from that electron gun.

The power supplies necessary for the operation of the ITT color display are solid state devices contained within a separate cabinet. This cabinet contains the low voltage supplies needed to power the intensification amplifiers, CRT filament, X and Y deflection pre-amplifiers, power amplifiers, and the convergence circuitry. The 24,000 volt power supply for the CRT anode voltage is contained within the Color Display Assembly cabinet.

The convergence circuitry compensates for misalignments of the 3 electron beam spots caused by tube geometry. This compensation is accomplished by sampling the amplitude of the deflecting signals and generating correction currents in the dynamic convergence yoke assembly.

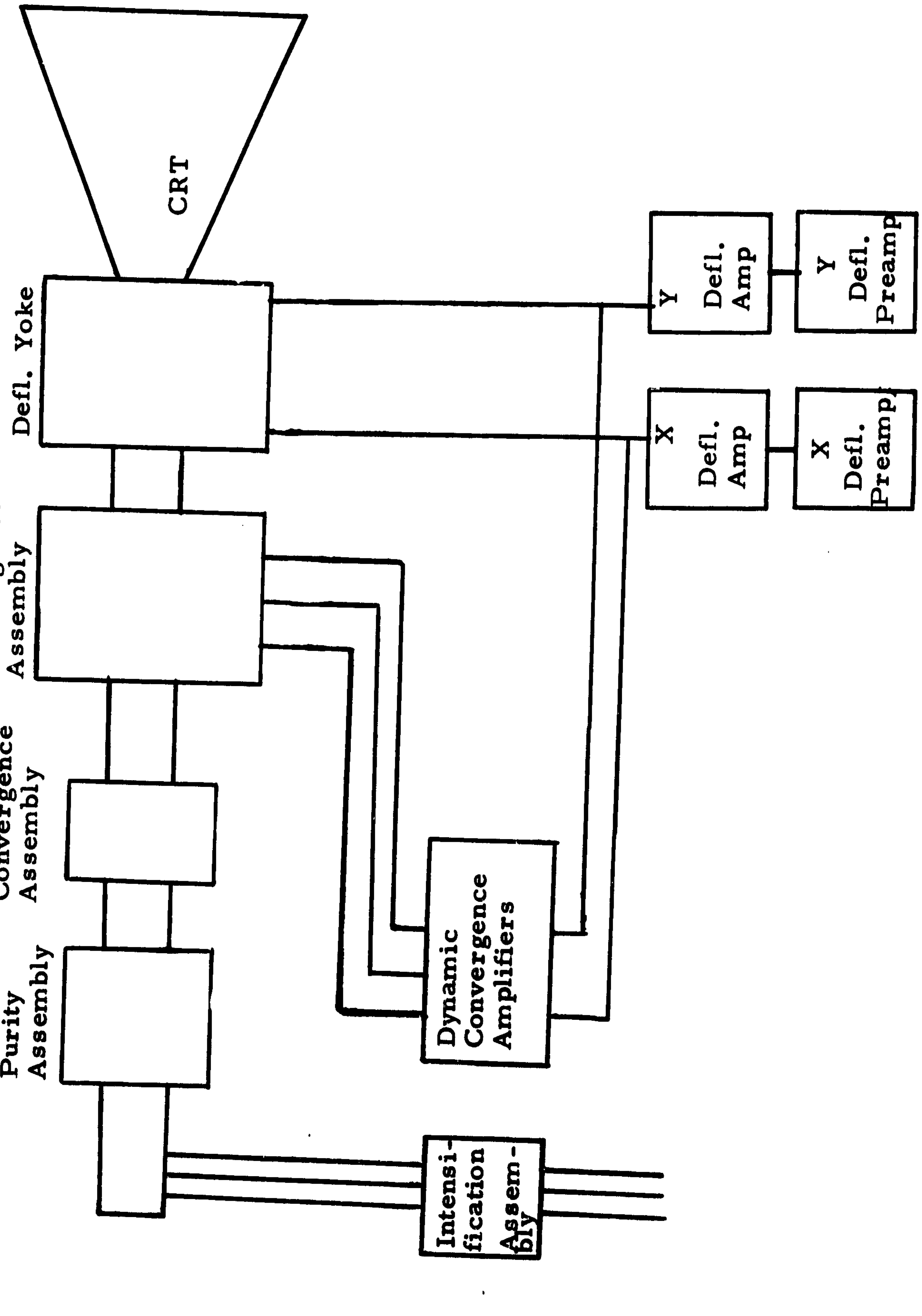

FIGURE 19. SIMPLIFIED DIAGRAM OF COLOR DISPLAY ASSEMBLY

The Sylvania RE19EYP22 color picture tube is a direct-view rectangular face glass tube capable of producing color or black and white pictures. These tubes utilize three electrostatic-focus guns spaced 120 degrees apart. The tri-color phosphor dot screen is composed of a matrix of small, closely spaced phosphor dots arranged in triangular arrays (triads). Each triad consists of green, blue and red emitting phosphor dots and is aligned with a corresponding hole in the shadow-mask.

Interface Design Requirements

The X and Y outputs of the IDI display generator are not of sufficient amplitude or proper impedance to properly drive the ITT color display. Impedance matching and signal amplification had to be provided for proper operation of the color display.

The X and Y output signals of the Distribution Assembly are 4 volts in amplitude and are designed to operate into a 100 ohm load. This signal level is designed to drive the IDI display scope, however, a gain increase of 2.5:1 is necessary for full screen deflection of the color display deflection circuits. Also, the X and Y input impedances of the color display scope are 5000 ohms, indicating there would be an impedance mismatch if the two assemblies were directly coupled together. Using 100 ohm termination resistors at the input of the operational amplifiers properly terminates the IDI display generator. The output of the operational amplifier is 5000 ohms indicating a proper match between operational amplifier and color scope.

Design Implementation

Figure 20 shows the interconnecting cables between the IDI display generator, Interface assembly and ITT display scope.

BNC connectors J973 and J974 contained within the IDI display generator distribution assembly provide the X and Y signals to the interface assembly respectively where they are each terminated with a 100 ohm resistor for proper impedance matching (see figure 21). The operational amplifiers amplify the applied signals and transmit them via coaxial cabling to the input of the ITT display scope.

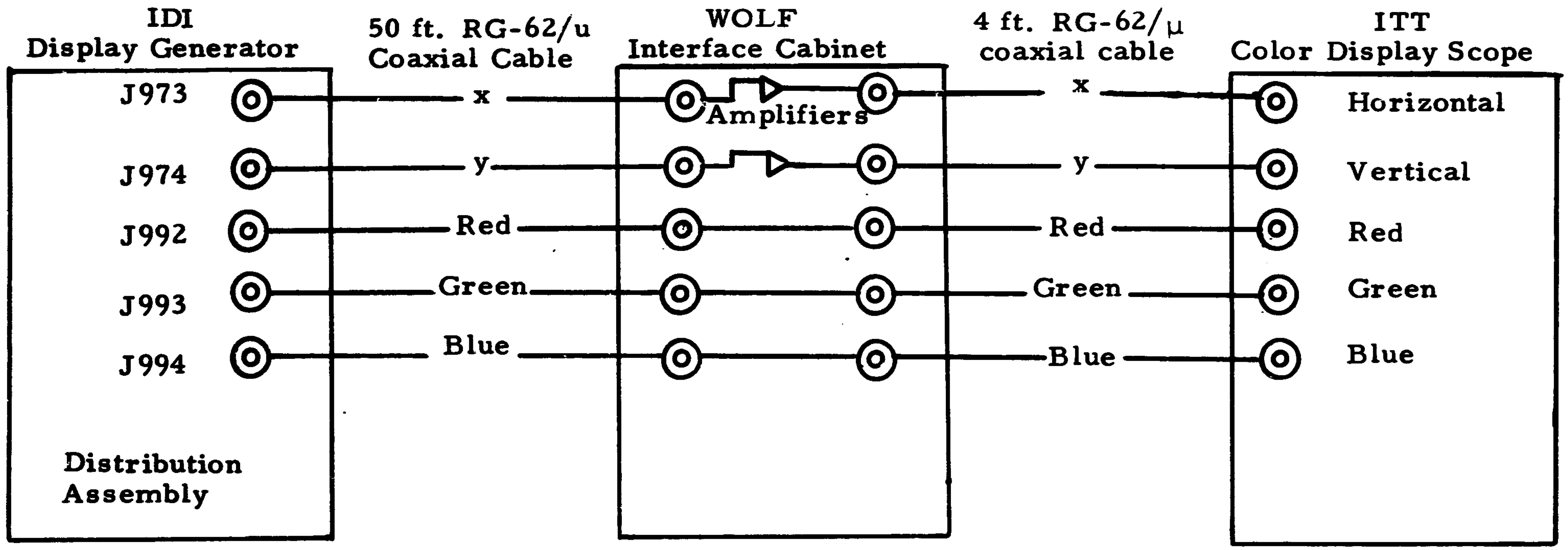

FIGURE 20. SCHEMATIC DIAGRAM OF INTERCONNECTING CABLES

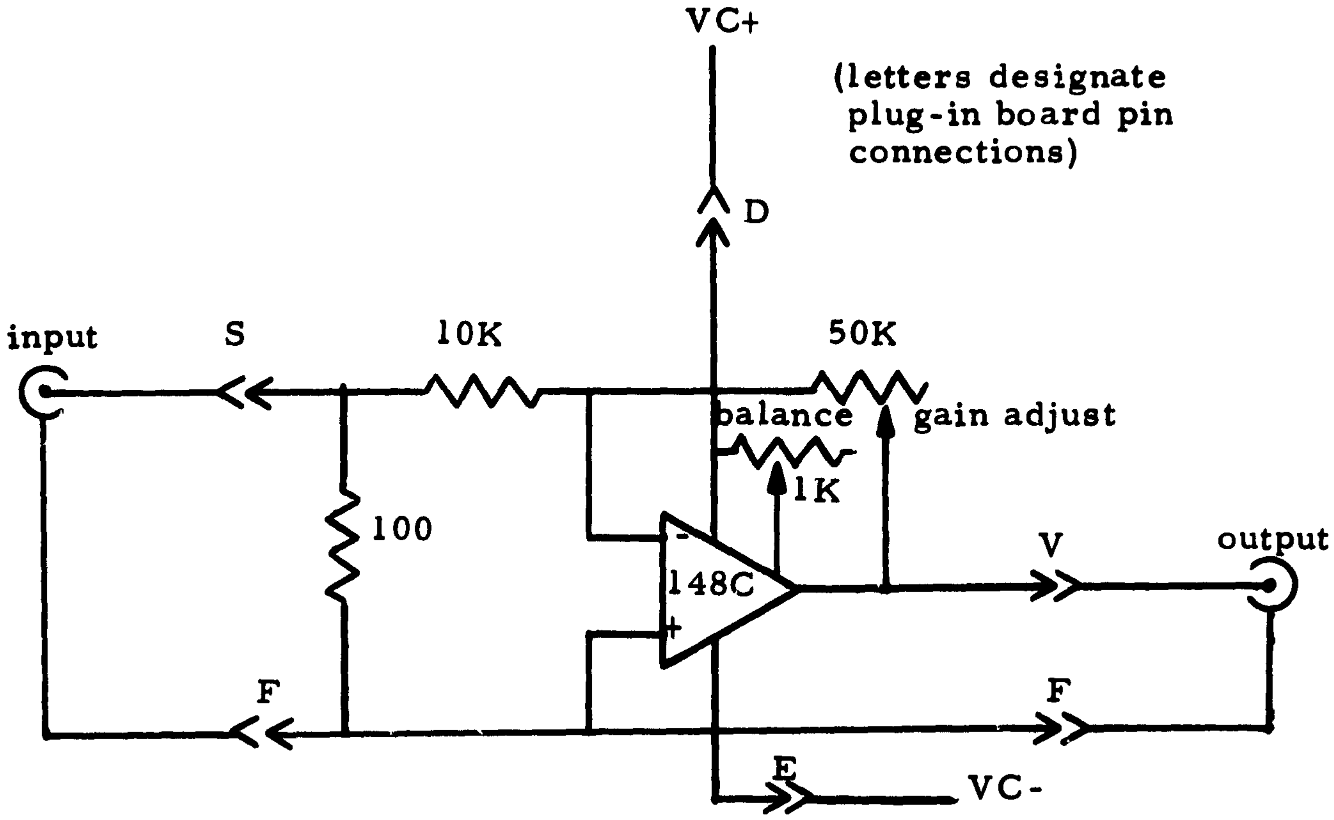

FIGURE 21. SCHEMATIC OF A PLUG-IN AMPLIFIER AND CONNECTOR

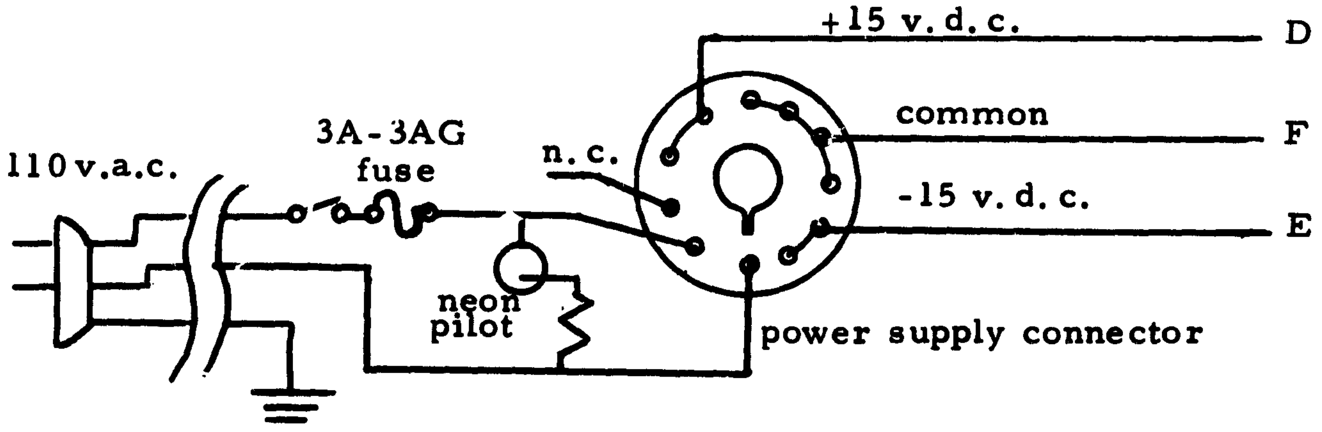

FIGURE 22. POWER WIRING SCHEMATIC

The BNC connectors J992, J993 and J994 carry the three gun intensification signals to the Interface assembly where they are transmitted to the color display directly with no change in amplitude. Termination is adequate as it exists in the case of the intensity signals due to the fact that the ITT color display intensity input is 100 ohms.

Figure 22 is a schematic diagram of the power supply wiring within the Interface Assembly.

COMPUTER SOFTWARE

A shadow-mask tube color reference and coordinate transformation system has been implemented in computer programs for the equipment which has been described. These programs, which are about to be described, are documented in flow-chart form in appendix E, and separately in computer listings. The color specification conventions which they employ differ to some extent from those developed earlier in this report, and are summarized in diagram form in appendix F. The programs were designed for compatibility and direct integration with existing KCS (organization code for the NASA-ERC Computer Research Laboratory, Man-Computer Branch) display programs.

Design Specifications

The KCS color utility package is a modified version of the utility 5B package as developed by D. Kipping of KCS. The design philosophy is centered around providing the user with access to both the B/W and Color scope on a demand basis. Since the DDP-516 will initially run in a dedicated mode, this will not result in any problems which occur when a user tries to display on a device which he does not have access to. At a later point in time, the device selection routines can be removed and placed in the supervisor segment so that display access will only be granted by the supervisor.

The design procedure involves changing those routines in the 5B package which generate code for the display buffer so that they may generate code which accommodates the operating characteristics of both the IDI and ITT scopes. This means modifications to SETPT, VECTOR, DOTS and CIRCLE routines to incorporate CSETPT, CVECT, CDOTS and CCIRCL color routines, which allow for color beam positioning, vector drawing, circle generation and strung dots displays. No attempt is being made at this time to include color characters, although they may be added at some later date when a software character generator is implemented. Additional routines are included to access the two console systems (DISATT and DISDET) and for color mixing (CDECOD, COLORS, GUNS, CHNGHU, CHNGVL, CHNGIN). These routines are discussed in the following pages. The routines of CLRBUF, CHAR, GLOBAL, BRIT, STRUCT, CSIZE, CROT, CHAN, LPVIZ, BLINK, SETBUF, MOVB2U, UTLSER, and UTLGEV remain the same and are used as specified in the KCS Graphics Manual.

When displaying information with a dedicated two console system, four states of console attachment are possible:

1) No consoles attached
2) Console 1(B/W) attached
3) Console 2 (Color) attached
4) Consoles 1 and 2 attached

Because there are times when the user wishes to place information on only one of the displays and other times when both displays are needed, the user is provided with a display attach command:

CALL DISATT(N)

$$N \begin{cases} 1 & \text{Attach B/W console} \\ 2 & \text{Attach Color console} \\ 3 & \text{Attach both} \end{cases}$$

This routine sets the logical variables BANDW and COLOR to reflect the logical attachment state of the consoles. Error Values:

50 - N out-of-Range, Both consoles turned on.

At other times, it is necessary to detach a display so hat unwanted information will not be sent to it. This facility is provided through use of a display detach command:

CALL DISDET(N)

$$N \begin{cases} 1 & \text{Detach B/W console} \\ 2 & \text{Detach Color console} \\ 3 & \text{Detach both} \end{cases}$$

This routine turns off the appropriate console attachment logical variables to reflect the new attachment state. Error values:

51 - N out-of-Range, Both consoles turned off.

52 - B/W Already Off When Requested to be Turned Off

53 - Color Already Off

54 - One Already Off when requested to turn both Off

To provide a complete color facility, two levels of color specification are provided. At a low level, the user is allowed to specify color as mixtures of intensities of range 0 to 3 on each of the three color guns:

CALL GUNS (RED, GREEN, BLUE)
RED = 0 to 3
GREEN = 0 to 3
BLUE = 0 to 3

Error Values	Reason	Result
63	RED too low	RED = 0
64	RED too high	RED = 3
65	GREEN too low	GREEN = 0
66	GREEN too high	GREEN = 3
67	BLUE too low	BLUE = 0
68	BLUE too high	BLUE = 3

At a higher level of color control the user specifies color in a hue, value (saturation), intensity (richness), system:

CALL COLORS (HUE, VALUE, INTENS)
HUE = 000 to 359
VALUE = 0 to (INTENS)
INTENS = 0 to 3

The allowable values of HUE, VALUE, INTENS are shown in the color charts contained in appendix F.

Error Values	Reason	Result
69	INTENS too low	INTENS = 0
70	INTENS too high	INTENS = 3
71	VALUE too low	VALUE = 0
72	VALUE too high	VALUE = INTENS

At times it is important to effect relative changes in the color of an object. Three routines are provided to allow color shifting:

CHNGHU(N)

N {1 Increase HUE
  2 Decrease HUE

The amount of increase or decrease which results will be one step around the current VALUE ring, as shown in the appendix F diagram, or more specifically, HUE will change by (60/VALUE) degrees. When VALUE is zero a change in HUE would be meaningless, and none occurs.

Error Value
73 Invalid Call, No Color Change

CHNGVL(N)

N {1 Increase VALUE by one
  2 Decrease VALUE by one

Error Values		Result
74	Invalid Call	
75	VALUE Out of Range Low	VALUE = 0
76	VALUE Out of Range High	VALUE = INTENS

CHNGIN(N)

N {1 Increase INTENS by one
  2 Decrease INTENS by one

Error Values		Result
77	Invalid Call	
78	INTENS Out of Range Low	INTENS = 0
79	INTENS Out of Range High	INTENS = 3

The CDECOD is an internal routine used to set up the intensity bit patterns for channel calls to provide full color mixing capability. This is only mentioned for completeness and the routine will be discussed in detail in a later section.

Beam positioning is provided by:

CALL CSETPT(X, Y)

$0 \leq X \leq 1023$

$0 \leq Y \leq 1023$

Error Values	Reason	Result
59	X out of Range	X forced into Range
60	Y out of Range	Y forced into Range

Vector drawing capability from present beam position to requested beam position is provided by:

CALL CVECT(X, Y)

$0 \leq X \leq 1023$

$0 \leq Y \leq 1023$

Error Values	Reason	Result
61	X out of Range	X forced into Range
62	Y out of Range	Y forced into Range

Circle construction at a specified center point (X, Y) of radius R is provided by:

CALL CCIRCL(X, Y, R)

$0 \leq X \leq 1023$

$0 \leq Y \leq 1023$

$0 \leq R \leq 511$

Error Values	Reason	Result
56	X out of Range	X forced into Range
57	Y out of Range	Y forced into Range
58	R out of Range	No circle drawn

Strung dots for inking can be generated by using:

CALL CDOTS(N, ARRAY)

$1 \leq N \leq 1000$

N is the number of words in a singly subscripted integer ARRAY of half word pairs of X, Y increments. Each increment must be right justified and in the range -3 to +3.

Error Value: 55 - N too large, no dots are constructed.

Console Attachment and Initialization

The color routines are initialized by the DISATT subroutine. This routine is used to request the use of either or both the Black and White and Color consoles. When the black and white console is requested, the logical variable BANDW is set to .TRUE. and KBRIT is set to intensity 3. When color is requested, the logical variable COLOR is set to .TRUE.; KRED, KGREEN, and KBLUE are set to 3, giving INTENS=3 and HUE and VALUE of 0; the values of XOLD and YOLD are set to 0. The consoles will remain attached until a request is made to detach either or both by using the DISDET command. In DISDET, the logical variables BANDW and COLOR are set to .FALSE. when their respective consoles are detached.

Color Manipulation Routines

This section presents routines which allow color to be handled at three different levels. First, basic color mixtures can be selected in terms of their red, green and blue gun intensities. Second, color can be selected in a more convenient manner by specifying its hue, value and intensity. It is then transformed into red, green and blue values by the COLORS routine. Third, color may be changed, one coordinate at a time, by incrementally changing its intensity, hue or value. This allows the user to easily use color to represent continuous functions.

The switching of gun intensity to the proper display channel is accomplished by the CDECOD routine. It serves as an interface between the color manipulation routines and the entity creation routines.

Color Transformation. - Selection of color for displayable entities may take place at one of two levels. Colors can be specified with their Red, Green, Blue component make up by using the GUNS routine. The integer variables KRED, KGREEN, KBLUE are set to the calling variables and then forced into the range 0 to 3. Appropriate error messages are issued through

APPEND when necessary. Color commands are not, however, placed in the display buffer. This task is deferred until color entity requests are made. The color decoding process is performed by the CDECOD routine.

At a more sophisticated level, colors can be selected in a hue, value, intensity coordinate system by using the COLORS routine. A color is specified in terms of KHUE, KVALUE, KINTEN, and is translated into the variables KRED, KGREEN, KBLUE. First limit checking is accomplished to force hue into a range from 000 to 359; fix intensity in a range 0 to 3 ; and set value between 0 and intensity. This action forces selection of a mixture as close as possible to the requested color. Appropriate error messages are issued through APPEND when necessary. A range table (KRANGE) tells the number of mixtures per value at any intensity. This converts hue to an integer in the ranges 1-18, 1-12, 1-6 or 1-1, depending on value. Next, the intensity and value (through use of KTABIV) points to a portion of the COLTAB where all hues at a constant intensity and value are encoded. When hue is added to this pointer the result points to a COLTAB entry. This entry is encoded in the form Color = 16* Red + 4* Green + Blue. The color component values are then stripped off and stored in KRED, KGREEN, and KBLUE respectively.

Structure of COLTAB

COLTAB #	Intensity	Value	Internal Hue Range
1	3	3	1-18
19	3	2	1-12
31	3	1	1-6
37	3	0	1
38	2	2	1-12
50	2	1	1-6
56	2	0	1
57	1	1	1-6
63	1	0	1
64	0	0	1

Note: Access to CØLTAB is thru a pointer provided in KTABIV. This pointer points to the beginning of a hue slice at constant intensity and constant value. Consider the case shown below:

KTABIV

63	-	-	-	1
62	56	-	-	2
55	49	37	-	3
36	30	18	0	4
1	2	3	4	

INTENS +1 ↓

VALUE +1 →

If we wish to obtain the gun intensities for INTENS=2, VALUE=2, KTABIV(3, 3) gives us 37. When the internal value of HUE (1-12) is added to 37 we have the proper CØLTAB subscript.

Color Shifting. - Three routines are provided to allow incremental color changing: CHNGHU, CHNGVL, and CHNGIN. Each routine will increase or decrease its respective color coordinate by 1 unit within the established limits. Erroneous or out-of-range calls will result in appropriate error messages.

In CHNGHU, HUE in angular units is incremented or decremented by the number of angular units corresponding to a discrete step at the current VALUE. A call is then issued to COLORS to have new values for KRED, KGREEN and KBLUE computed. For VALUE = 0, there is no resulting change in HUE. Appropriate error messages are issued when erroneous calls to CHNGHU are made.

In CHNGVL, VALUE is incremented or decremented and checked to assure that it stays in the range 0 to INTENS. If VALUE is changed to an out-of-range value, high or low error messages are issued through APPEND. The color request is issued through a call to COLORS.

In CHNGIN, INTENS is incremented or decremented and checked for the range 0 to 3. High or low error messages are issued when necessary. The actual change color request is issued through a call to COLORS.

Color Decoding. - The CDECOD routine serves to interface the color manipulation routines with the entity creation routines. To accomplish this task, it examines the present black and white intensity (BWBRIT) and the three color intensities (KRED, KGREEN, KBLUE) to establish the proper global words needed to select channels and brightness levels to accomplish color mixing. The array CHNBRT represents the display channels 4, 3, 2, 1 in an 8-4-2-1 coding scheme for intensity levels 0 to 3. This array is then marked to reflect channel-brightness information. A channel mask (CHNMSK) is created to allow output only on those channels which are connected to an attached display. Finally, SUM is calculated which counts the number of global calls which need to be made to create one display entity. The current value of BWBRIT +1 is saved as BWGLOB so that the global in the buffer may be reset after creation of a color entity.

	Channels					
	Blue 4	Green 3	Red 2	B/W 1	Intensity Value	IDI Intensity
CHNBRT (1)			X		0	Off
CHNBRT (2)		X		X	1	Low
CHNBRT (3)					2	Medium
CHNBRT (4)	X				3	High
Bit	13	14	15	16		

In the example shown above, the CHNBRT Table is marked as follows.

B/W	channel 1	beam at low intensity
Red	channel 2	beam off
Green	channel 3	beam at low intensity
Blue	channel 4	beam at high intensity

This b/w - color mixture gives rise to the two following global calls.

```
CALL GLOBAL (2, 0, 0, 0, 5, 0, 0)
CALL GLOBAL (4, 0, 0, 0, 8, 0, 0)
```

Note that only 1 bit per column is marked, but all bits in any row could be marked. Since there are only 3 visible intensities as many as 3 separate globals might be needed to display one b/w - color entity.

Entity Routines

This section discusses the subroutines (CSETPT, CVECT, CCIRCL and CDOTS) used to construct the actual graphical entities. These routines provide for beam positioning, vector drawing, circle creation and display of strung dots. No character routine is provided because the KCS software character generator was not implemented at the time UTIL-5D was designed, but software color characters could easily be implemented at some later time using the CVECT routine.

The color entity routines are generally of similar design to those of the UTIL-5C package, but due to the nature of the color equipment must be separate programs. The main departure in the color routines lies in the insertion of NOP codes in the display buffer to allow beam setting delay time, and extra code for beam retracing to allow for time sequenced color mixing.

In general, the color entity routines follow the algorithm presented below.

```
1. If (COLOR =.FALSE.) and (BANDW = . TRUE.)
   issue a call to the appropriate black and white entity
   routine
2. Call CDECOD
3. If SUM = 0, Return
```

4. Perform error checks on input variables to assure they are in range.
5. Issue appropriate display commands for each channel request needed to accomplish color mixing.
6. XOLD = XNEW
   YOLD = YNEW
   put BWGLOB in display buffer
7. RETURN

CSETPT. - The CSETPT routine is used to position the color beam to any allowable (X, Y) position on the color scope. The beam positioned by inserting the commands:

```
VM
LXR         XNEW
NOP
VIY         YNEW
NOP
```

in the display buffer. The NOP commands are used to assure proper beam settling time on the color display. The variables XOLD and YOLD are set to XNEW and YNEW respectively. Error codes are issued for out-of-range values of x or y.

CVECT. - The CVECT routine is used to draw a vector from the present beam position to any allowable (X, Y) position on the color scope. If the color scope is not attached, and the black and white console is attached, a call is made to the VECTOR routine. Otherwise, data ranges are limit checked by CHKRGN, and a loop is entered to find the first non-zero value in the CHNBRT(I) table. After calling GLOBAL to build the first channel intensity word, the first trace of the vector is made by inserting the following commands in the display buffer:

```
VM
LXR         XNEW
NOP
VDY         YNEW
NOP
```

The variable SUM (of the COLCOM common area) is then checked to see how many remaining traces must be drawn. If none remain the word BWGLOB is inserted in the display buffer, XOLD and YOLD are set to XNEW and YNEW respectively, and the routine exits. If one trace remains, the beam is reset by calling CSETPT(XOLD, YOLD). The next combination is taken from CHNBRT(I) to create a new global. The commands:

```
LXR       XNEW
NOP
VDY       YNEW
NOP
```

are inserted into the buffer. The previous BWGLOB is inserted in the display buffer and (XOLD, YOLD) is updated. If two traces remain, CHNBRT(3) is taken as the next global, and the vector is retraced by the commands:

```
LXR       XOLD
NOP
VDY       YOLD
NOP
```

The third global is then inserted from CHNBRT (4), and the vector is traced a third time using the method mentioned for the two-global case.

CCIRCL. - The CCIRCL routine will draw circles anywhere on the scope face with a maximum radius of 511. After limit checking for circle position and rejecting the circle if its radius is too large, the routine positions the beam by using the same sequence of display codes used in CSETPT. A loop is used to create a three word display list for every active entry in the CHNBRT table. This display list consists of a global word, followed by:

```
CRD       RADIUS
NOP
```

After the 3 word display lists are put in the display buffer, the BWGLOB is inserted in the buffer and (XOLD, YOLD) is updated.

CDOTS. - The CDOTS routine is used to provide the strung dot capability which is used primarily for inking when using Rand tablet input or display closely spaced sequential data. As in other routines, CDOTS inserts a color global, displays an entity and then retraces that display for the other color globals if they exist. The major portion of the routine is involved with unpacking (X, Y) pairs from ARRAY, limit checking, and packing them two pairs to a word in the display buffer. At the finish of CDOTS, the beam position is still (XOLD, YOLD).

COLCOM Variables and Their Meanings

KRED	present value of red beam intensity
KGREEN	present value of green beam intensity
KBLUE	present value of blue beam intensity
HUE	present angular value of HUE
VALUE	present value of VALUE
INTENS	present value of INTENSITY
XOLD	X position of color beam at end of last entity call (note, position at beginning of CDOTS)
YOLD	Y position of color beam at end of last entity call (note, position at beginning of CDOTS)
CHNMSK	word used to mask out color and black and white channels before channel bits are packed into a global word. Value of CHNMSK depends on status of COLOR and BANDW
CHNBRT(I)	the CHNBRT variables contain bits to tell which channels are turned on for beam intensity = I - 1.
COLOR	a logical variable used to reflect the attachment status of the color display
BANDW	a logical variable used to reflect the attachment status of the black and white display
BWGLOB	integer variable to preserve the status of the global word prior to a color call
SUM	integer variable to tell entity routines the number of times entities must be created to do time sequenced color mixing

UTIL 5D Error Codes

Subroutine	Error Code	Condition	Default Result
DISATT	50	N out-of-range	Both Scopes On
DISDET	51	N out-of-range	Both Scopes Off
	52	B/W Already Off	
	53	Color Already Off	
	54	Both Already Off	
CDOTS	55	N too large	No dots
CCIRCL	56	X out-of-range	x forced
	57	Y out-of-range	y forced
	58	Radius out-of-range	No circle drawn
CSETPT	59	X out-of-range	x forced
	60	Y out-of-range	y forced
CVECT	61	X out-of-range	x forced
	62	Y out-of-range	y forced
GUNS	63	RED too low	forced to 0
	64	RED too high	forced to 3
	65	GREEN too low	forced to 0
	66	GREEN too high	forced to 3
	67	BLUE too low	forced to 0
	68	BLUE too high	forced to 3
COLORS	69	INTENS too low	INTENS = 0
	70	INTENS too high	INTENS = 3
	71	VALUE too low	VALUE = 0
	72	VALUE too high	VALUE = INTENS
CHNGHU	73	Invalid Call	--
CHNGVL	74	Invalid Call	--
	75	Out-of-range low	VALUE = 0
	76	Out-of-range high	VALUE = INTENS
CHNGIN	77	Invalid Call	--
	78	Out-of-range low	INTENS = 0
	79	Out-of-range high	INTENS = 3

RECOMMENDATIONS

In the performance of this work, a number of potential areas for further improvement and refinement became apparent.

Intensification Circuits

The intensification amplifiers (video amplifiers) in the ITT color display are extremely sensitive to voltage change. This presents a problem in establishing the three non-"black" levels of display intensification. This problem may possibly be corrected using one of the two following approaches.

1) changing the grid #2 voltage of the CRT. This voltage at present appears to be too low, causing the CRT to operate at its lowest level.

2) reducing the gain of the intensification amplifiers. This would require changes in values of the components within the existing amplifiers.

Static Convergence

The present Static Convergence of the CRT does not appear to be correct. The red and green guns, when converged at the center, do not track correctly when the beam is positioned near the extremities of the display area. There appears to be a rotating action of the two beams. This problem is noticeable mostly in the lower left corner of the display where the red beam is above the green beam. This problem should be investigated by removing all possible dynamic convergence voltage from the convergence coils and varying the position of the beams, rotating the static convergence. If, in fact, the problem exists, it may be due to the upside-down mounting of the CRT (the tube contains provisions for gravity compensation and the manufacturer, Sylvania, specifies that the tube should be mounted with the anode pointing up, but as mounted it points downward), or the problem may call for replacement of the existing shadow-mask tube.

Dynamic Convergence

The present dynamic convergence system in the ITT display does not produce the proper parabola shaped correction signal as required to converge the three beams of the CRT. This problem may be approached by one of two methods.

1) Modifications to existing circuits.

The present convergence system derives its convergence signals by making a composite waveform of the non-inverted and inverted horizontal or vertical deflection signals. These x and y signals are then combined together and used to drive the convergence coils. The resulting straight-line segment approximation of a parabola is too gross an approximation to permit effective tilt correction.

2) Replacement of existing circuits.

Removal of the present convergence system and installation of analog amplifiers appropriately connected to produce a true parabola and tilt function for correct convergence of the three beams is a more expensive but more promising approach to this problem.

Transformation Algorithm

An approach for developing a coordinate transformation algorithm is suggested at the end of the section on the use of color displays. The approach provides a solution for obtaining at least two of the three gun-intensity values directly from the hue-oriented coordinates. It stops at the more difficult step for obtaining the third. Further study might produce a complete algorithm (at least for the special case of four gun-intensity levels) and answer the question of whether a hardware or a software means is more suitable for implementation, or whether in fact any advantage over the present implementation might be expected.

BIBLIOGRAPHY

Gagan, R. P., et al., "Data Display Programming", NASA Contractor Report CR-1107 and final report Contract No. NAS5-9756-47, Wolf Research and Development Corp., September 1968. For sale by the Clearinghouse for Federal Scientific and Technical Information, Springfield, Va. 22151. CFSTI price $3.00.

Walter, C. M., "Color - A New Dimension in Man - Machine Graphics," Proc. IFIPS Congress, 1965.

Poole, H. H., "Color Cathode Ray Tubes," Chapter 3 of Fundamentals of Display Systems, Spartan, 1966.

Thorpe, R. A., "Color Displays with a Computer," The Electronic Engineer, Vol. 26, No. 12, pp. 42-46, December 1967.

Weniger, K., "Computer Generates Visual Display," The Electronic Engineer, Vol. 26, No. 11, pp. 16-18, November 1967.

______________, " Operating and Maintenance Manual, Model KM906," ITT Industrial Products Div.

______________, "Computer Controlled Display System Type CM10133: Instruction Manual - Vol. I; Hardware Equations, Wire Lists - Vol. II; Drawings - Vol. III," Information Displays, Inc.

APPENDIX A. COLOR DISPLAY INTERFACE ASSEMBLY MAINTENANCE AND OPERATION

The installation of the Interface Assembly is accomplished through the use of BNC coaxial connectors.

Five uhf coaxial cables (RG-62/U) fifty feet in length transfer X and Y deflection and red, green, and blue intensification signals from the IDI Display Generator Assembly to the WOLF Interface Assembly. Five uhf coaxial cables (RG-62/U) four feet in length convey the above signals from the WOLF Interface Assembly to the appropriate input connectors of the ITT Color Display Assembly.

Power is applied to the Interface Assembly via the attached 110 V.A.C. cord.

The Interface Assembly may be mounted in any position providing there is sufficient air circulation for power supply cooling.

The gain adjustment of the operational amplifiers in the Interface Assembly is accomplished in the following manner.

1. Display a square with a programmed size of 10 x 10 inches (largest display size).
2. Advance the horizontal and vertical gain controls provided on the front of the Color Display Assembly fully clockwise.
3. Increase or decrease the operational amplifier gain controls until the display measures 10 inches square.

The procedure enables the user to decrease the display size as needed, using the Color Display Assembly controls, but prevents him from increasing the display beyond its limits, possibly causing damage or distortion.

Access to the operational amplifiers is accomplished by removing the four (4) screws on top of the Interface Assembly cabinet and removing the perforated cover plate.

Removal of the operational amplifiers is accomplished by pulling the plug-in board out using the attached handle.

CAUTION:

POWER SHOULD BE REMOVED FROM THE INTERFACE ASSEMBLY AND COLOR DISPLAY ASSEMBLY BEFORE REMOVAL OF BOARDS.

The Color Display Assembly deflection amplifiers, being solid state devices, conduct immediately when power is applied. This fact dictates that the input signals applied to the X and Y amplifiers be within their operating range prior to applying power to the Color Display Assembly. Applying power to the Interface Assembly first will minimize the likelihood of damage.

To correct for the inversion of X and Y deflection signals, it was necessary to reverse the yoke connections within the ITT display. Reversing the yoke connections has inverted the operations of the X and Y positioning controls on the face of the scope. This reversal can be corrected if desired by reversing the two outside connections at the rear of the positioning controls.

APPENDIX B. ITT KM906 COLOR DISPLAY OSCILLOSCOPE PRINT DISCREPANCIES AND MODIFICATIONS

While becoming familiar with the ITT Color Display Assembly Schematic several component discrepancies were noticed. A list of these discrepancies follows:

Schematic: Video Amplifier — Print No. 5042355

Component No.	Print Value	Actual Value
R1	100 ohms	120 ohms
R16	50 ohms, 5 watt	47 ohms, 2 watt
R21	1500 ohm	2000 ohm

Schematic: Convergence — Print No. 5042356

R12, R45	470 ohm	330 ohm
C2, C4	470 pf	1000 pf
R71, R80	511 ohm	499 ohm
R87, R87G R87B	47 ohm	470 ohm
R94, R94G R94B	50 ohm	51.1 ohm
C1, C3	100 pf	not present

Schematic: Deflection Amplifier — Print No. 5042356

C1	220 pf	470 pf

Other discrepancies noted.

Schematic: Video Amplifier — Print No. 5042355

The wire leads between the output of the Video Amplifiers and the CRT cathodes as shown connected directly to the collectors of Q2, Q4, and Q6. Visual inspection revealed that these leads are connected to the junction of R4, R5; R9, R10 and R14, R15.

Schematic: Convergence — Print No. 5042356

Resistors R6 and R4 have been paralleled with additional resistors to evidently increase the output of one side of each amplifier. R6 has been paralleled with a 6.8K resistor and R54 has been paralled with a 10K resistor.

During bench testing of the ITT Color Display Assembly, a distortion in the horizontal convergence was noticed. Investigation revealed that increasing the horizontal gain to full screen saturated the horizontal convergence amplifier. To prevent this saturation, potentiometers were installed in the inputs of both X and Y convergence amplifiers. These potentiometers replaced R1 and R34 (Schematic Convergence ITT drawing no. 5042356). Figure B-1 shows how these potentiometers were incorporated.

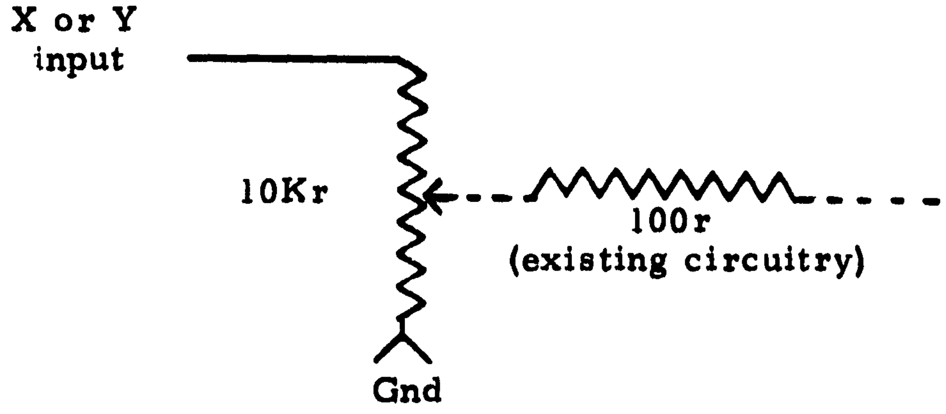

FIGURE B.1. SCHEMATIC DIAGRAM, INSTALLATION OF CONVERGENCE GAIN POTENTIOMETERS

A diode was inserted in the blue gun convergence circuit to enable transfer of the convergence signal to that gun. This addition was documented on drawing no. 5042356.

Ripple at the beginning of a vector was found to result from loading down of the +60 V.D.C. power supply upon intensification, which caused the horizontal and vertical driver amplifiers to follow. A 5.0 microfarad capacitor inserted from the junction of R16 and R21 (of the video amplifier) to ground seemed to cure the problem. This capacitor was not permanently installed.

Finally, X and Y deflection connections on the shadow-mask tube yoke were reversed as noted in appendix A.

APPENDIX C. INTERFACE PARTS LIST

The following parts are incorporated in the WOLF color display interface assembly.

ITEM	PART NO.	QUANTITY
Mounting Panel	DEC Part 1943FB	1
Power Supply	DEC Part H704	1
Switch	GRAYHILL Part 447	1
Pilot Lamp	LEECRAFT 1010A1	1
Fuse Holder	LITTLEFUSE 342004	1
Line Cord	BELDEN 17237-SVT	1
Coax Connectors	AMPHENOL 5575 (Mil UG-625/U)	10
Coax Connectors	AMPHENOL 31-012 (Mil UG-260/U)	20
Coax Cable	Alpha 824 (Mil RG-62/U)	270 feet

following items are one (1) per plug-in board

Amplifier board DEC A992
Operational Amplifier Analog Devices 148C
Gain Potentiometer BOURNS Z BOU 236L 1 503
10, 000 ohm resistor Mil Z WL RN 70C1002
100 ohm resistor 100 ohm, 1 Watt Carbon Composition

Manufacturers and Suppliers:
Digital Equipment Corporation, Maynard, Mass.
ANALOG DEVICES, Cambridge, Mass.
Electrical Supply Corporation, Cambridge, Mass.

APPENDIX D. WAVEFORM ANALYSIS TESTING PROCEDURES

Testing of the color display interface involved waveform analysis at various points in the system, using a Tektronix oscilloscope.

It will be noticed that all of the following photos contain the same waveform at the top. This is the vertical input signal to the Interface Assembly. It was used for oscilloscope synchronization and reference for the bottom trace.

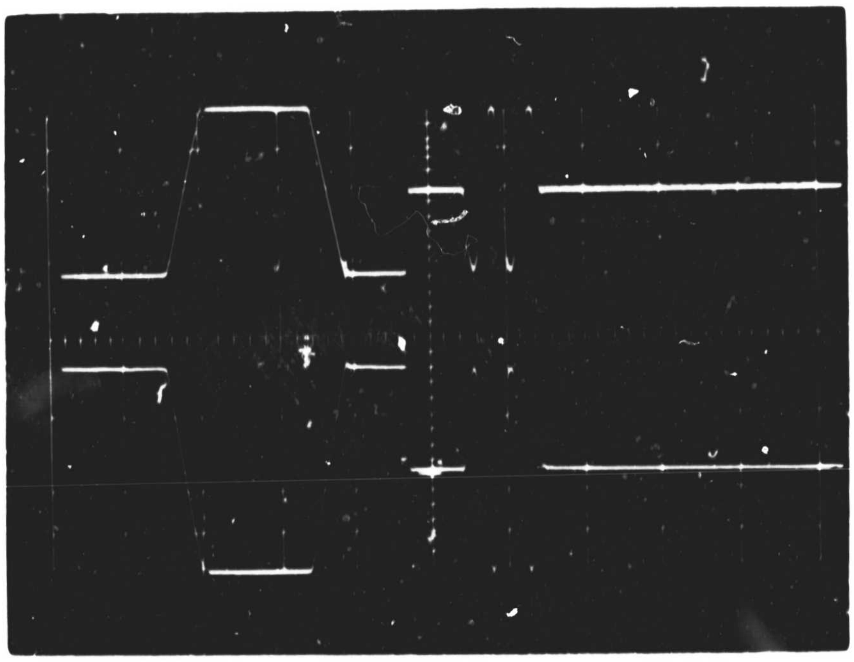

FIGURE D. 1. INTERFACE Y DEFLECTION OUTPUT

Figure D. 1 bottom trace is the output of the Interface Assembly indicating an inversion and increase in amplitude compared to the top trace. It will also be noticed that the output is a perfect replica of the input.

The following photos were taken at various points throughout the vertical amplifier assembly of the color display.

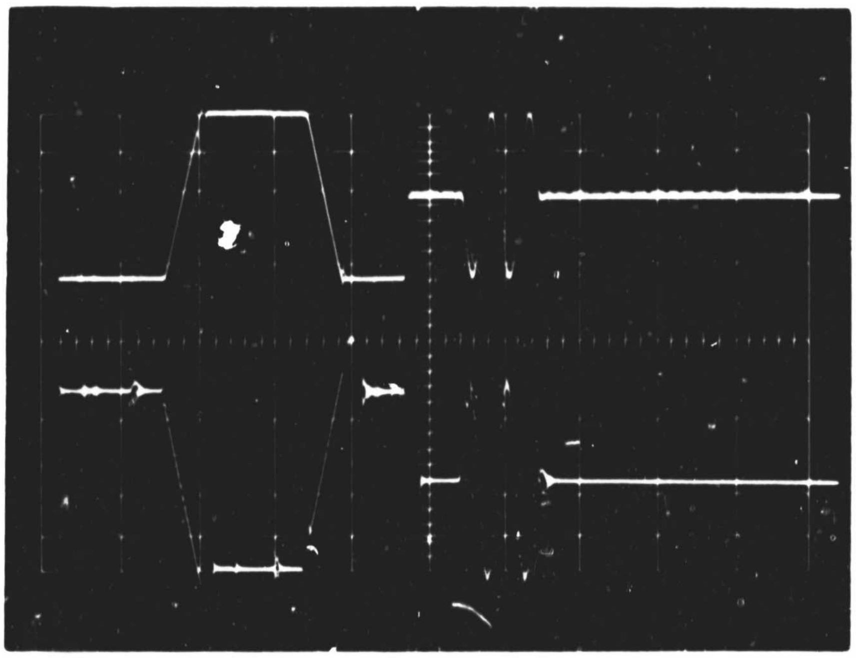

FIGURE D. 2. PRE-AMPLIFIER Y DEFLECTION SIGNAL

Figure D. 2 shows the output of the vertical pre-amplifier (signal across R78 X and Y Preamp ITT drawing no. 5043405) located beneath the CRT and behind the X and Y gain and position controls. It will be noticed that a transient applied to the input of the color display (see small positive spike approximately 3. 9 cm. from left in upper display) causes a ringing effect at the output of the pre-amp.

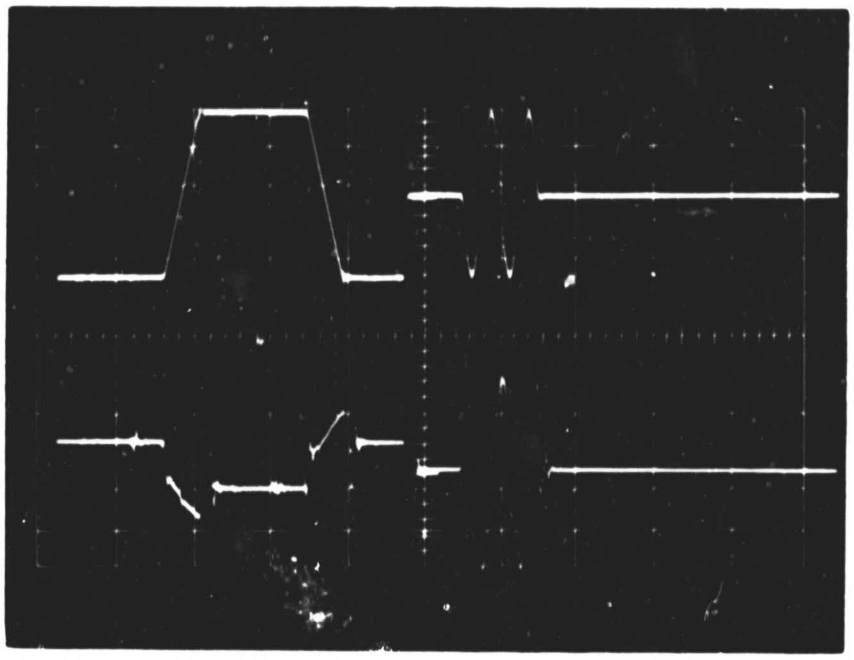

FIGURE D. 3. AMPLIFIER Y DEFLECTION SIGNAL

Figure D. 3 is the output of the Y deflection amplifier (signal at output of Q5 Deflection Amplifier ITT drawing no. 5043004) prior to the Y power amplifier. This photo shows one side to ground of the push-pull output. Again, the ringing is evident 2. 1 and 3. 9 cm. from left.

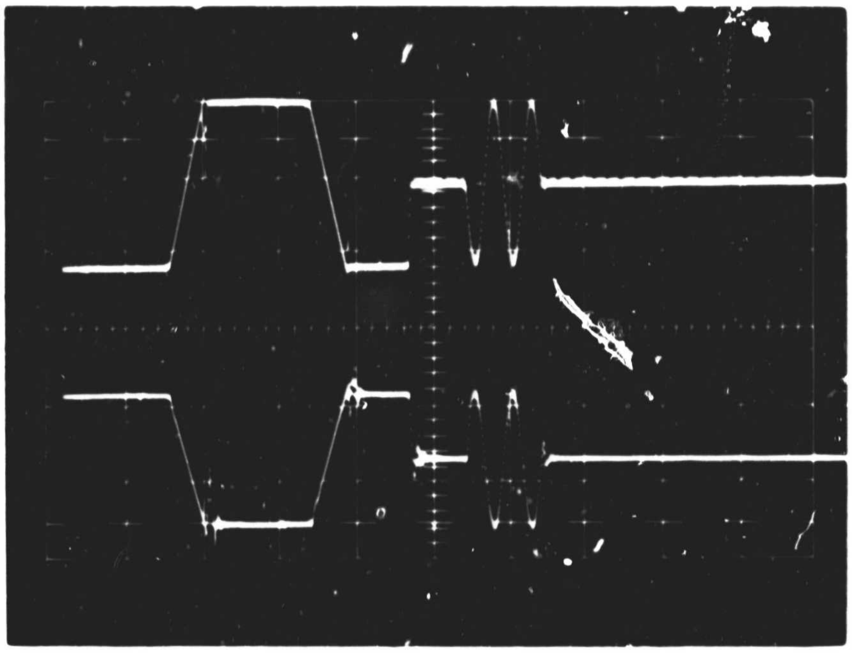

FIGURE D.4. Y DEFLECTION SIGNAL; FINAL FORM

Figure D.4 shows the output signal of the Y power amplifier (junction of deflection yoke, R60, R59 and R62 Deflection Amplifier ITT drawing no. 5043004). This signal is applied to the yoke. The signal has now been restored to its original shape. Noise is still present 2.1 cm. from left.

Figure D. 5 illustrates the manner in which convergence signals are generated within the ITT Color Display Assembly.

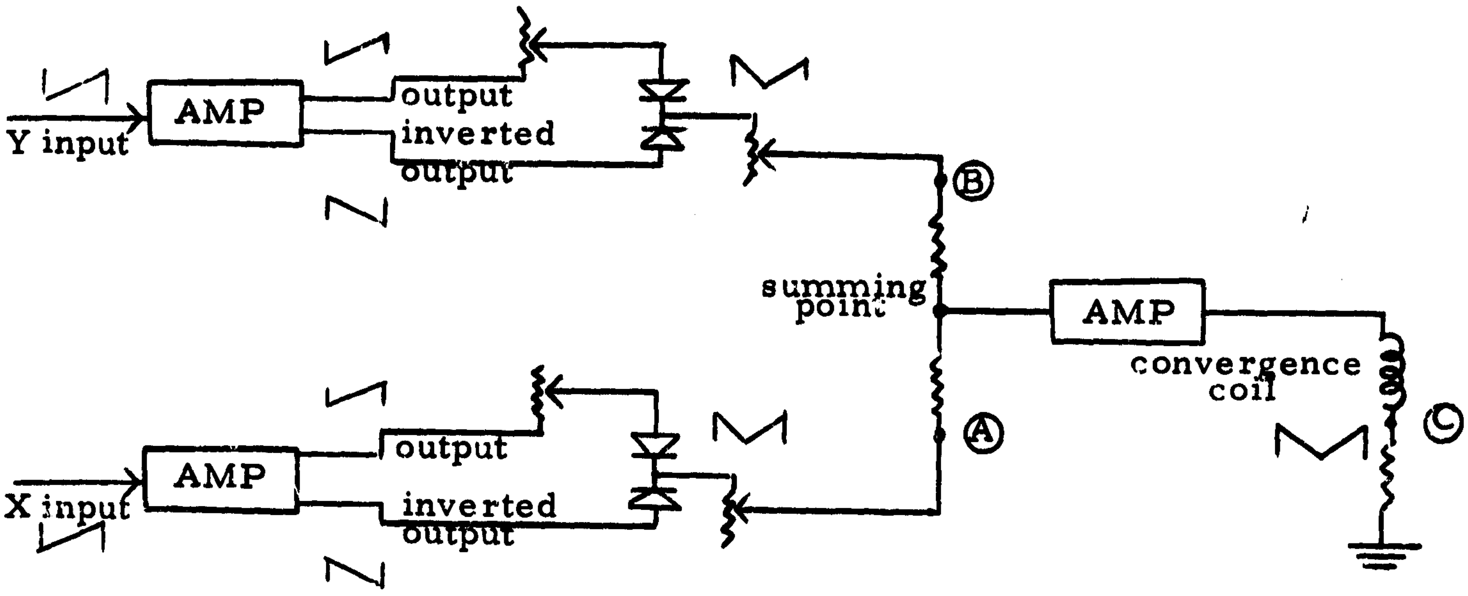

FIGURE D. 5. SIMPLIFIED DIAGRAM OF CONVERGENCE CIRCUITRY, SHOWING TYPICAL MIXING, SUMMING, AND AMPLIFIERS FOR ONE GUN

The input signals are obtained from the deflection yokes (J1 Deflection Amplifiers ITT drawing no. 5043004). These signals are amplified to produce inverted and non-inverted outputs which are then combined in the diode mixer. This mixed signal is then summed with the corresponding signal from the other axis at the 'summing point', amplified and applied to the convergence coil. Mixing, summing and amplifying circuits for the other two convergence coils are not shown in this diagram but essentially duplicate the portion to the right of the dashed line. The amplifiers at the left are common to all three convergence circuits.

The adjustable resistors are present for gain adjustments. It is necessary to increase the gain of one side of the amplified parabola more than the other to introduce tilt to the convergence signal. Figure D. 6 illustrates an equally balanced convergence signal and one with tilt applied.

FIGURE D. 6. BALANCED AND TILTED CONVERGENCE SIGNALS

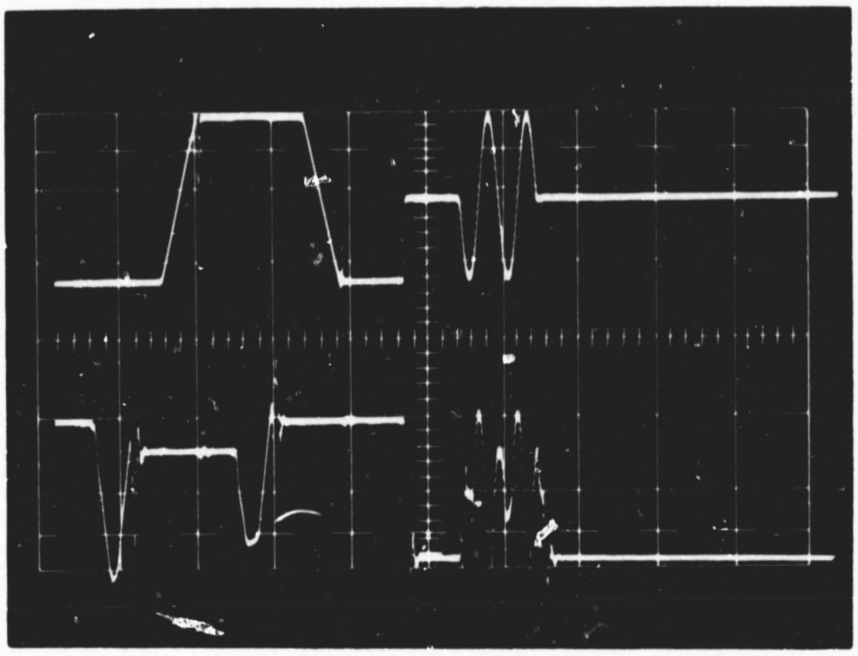

FIGURE D. 7. BLUE CONVERGENCE X CORRECTION

Figure D. 7 shows the blue "X" convergence signal taken at point (A) in the block diagram (junction R67B and R109 Schematic Convergence ITT drawing no. 5042356). It will be noticed that there are two "parabolas" present, one approximately 1 cm. from the left and one approximately 2. 5 cm. from the left. Looking at the top trace, the parabolas occur during the horizontal line which would be a ramp signal if the top trace had been "X" instead of "Y". The parabolas when applied as shown increase the amount of current through the convergence coil pushing the blue beam down to converge with the red and green beams. An example of this effect is shown in Figure D. 8.

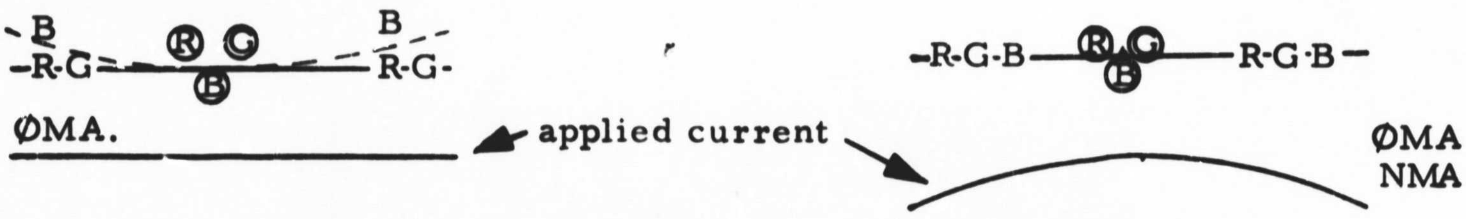

no correction applied.

correction applied to blue beam.

FIGURE D. 8. DYNAMIC CONVERGENCE EFFECT

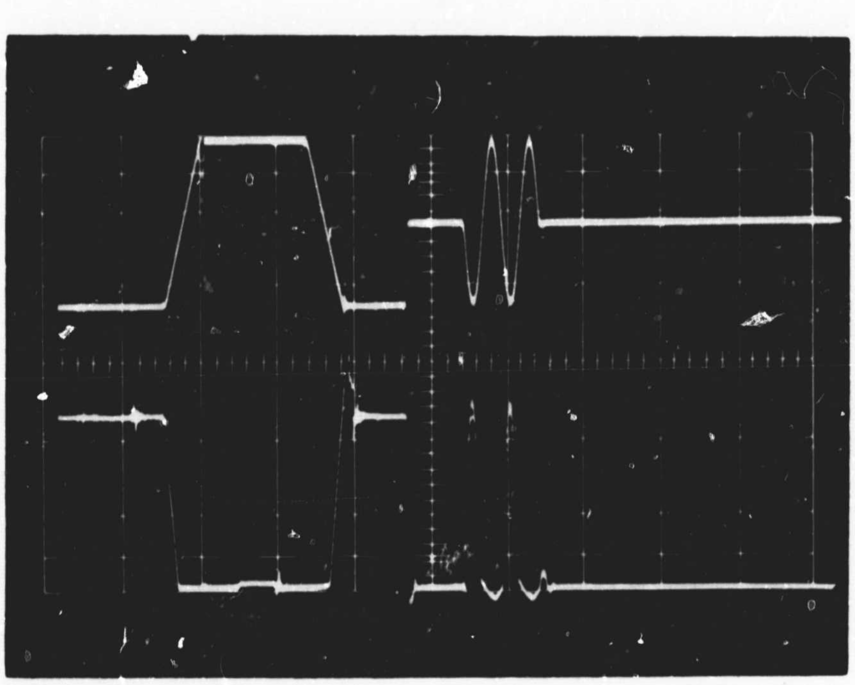

FIGURE D. 9. BLUE CONVERGENCE Y CORRECTION

Figure D. 9 shows the blue "Y" convergence signal taken at point (B) in the block diagram (junction R115 and R68B Schematic Convergence ITT drawing no. 5042356).

Points (A) and (B) are then combined, amplified and applied to the blue convergence coil. The composite signal can be seen in Figure D. 10 taken at point (C) in the block diagram (junction of convergence coil, R94B and R93B Schematic Convergence ITT drawing no. 5042356).

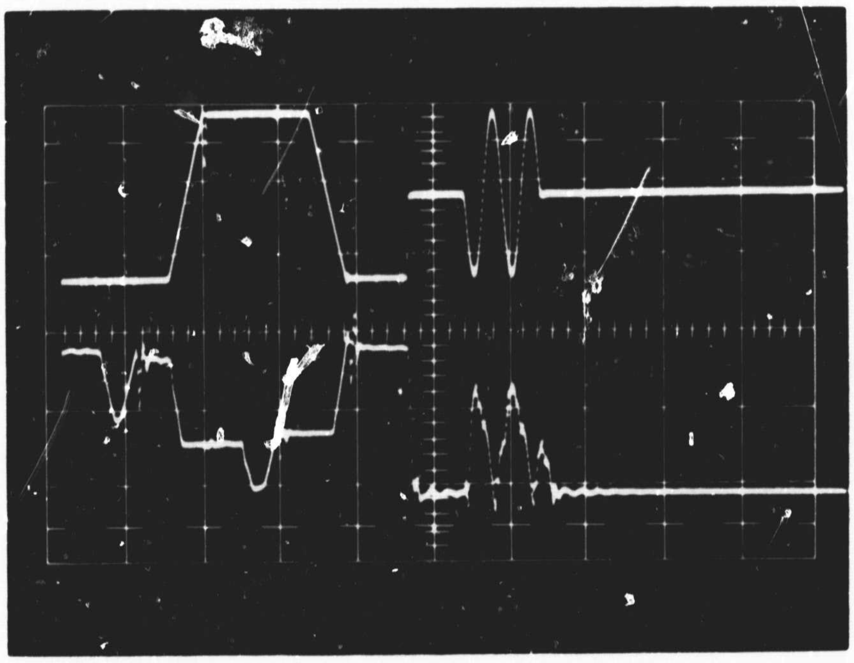

FIGURE D. 10. COMPOSITE BLUE CONVERGENCE CORRECTION

Figure D. 11 shows the green convergence correction waveforms and Figure D. 12 the red, again in "X", "Y", and composite sequence as shown for blue. Test points for green are the junctions of R67G and R107; R68G and R113; and green convergence coil, R94G and R93G respectively, Schematic Convergence ITT drawing no. 5042356. Test points for red are the junctions of R67 and R105; R68 and R111; and red convergence coil, R94 and R93 respectively, Schematic Convergence ITT drawing no. 5042356.

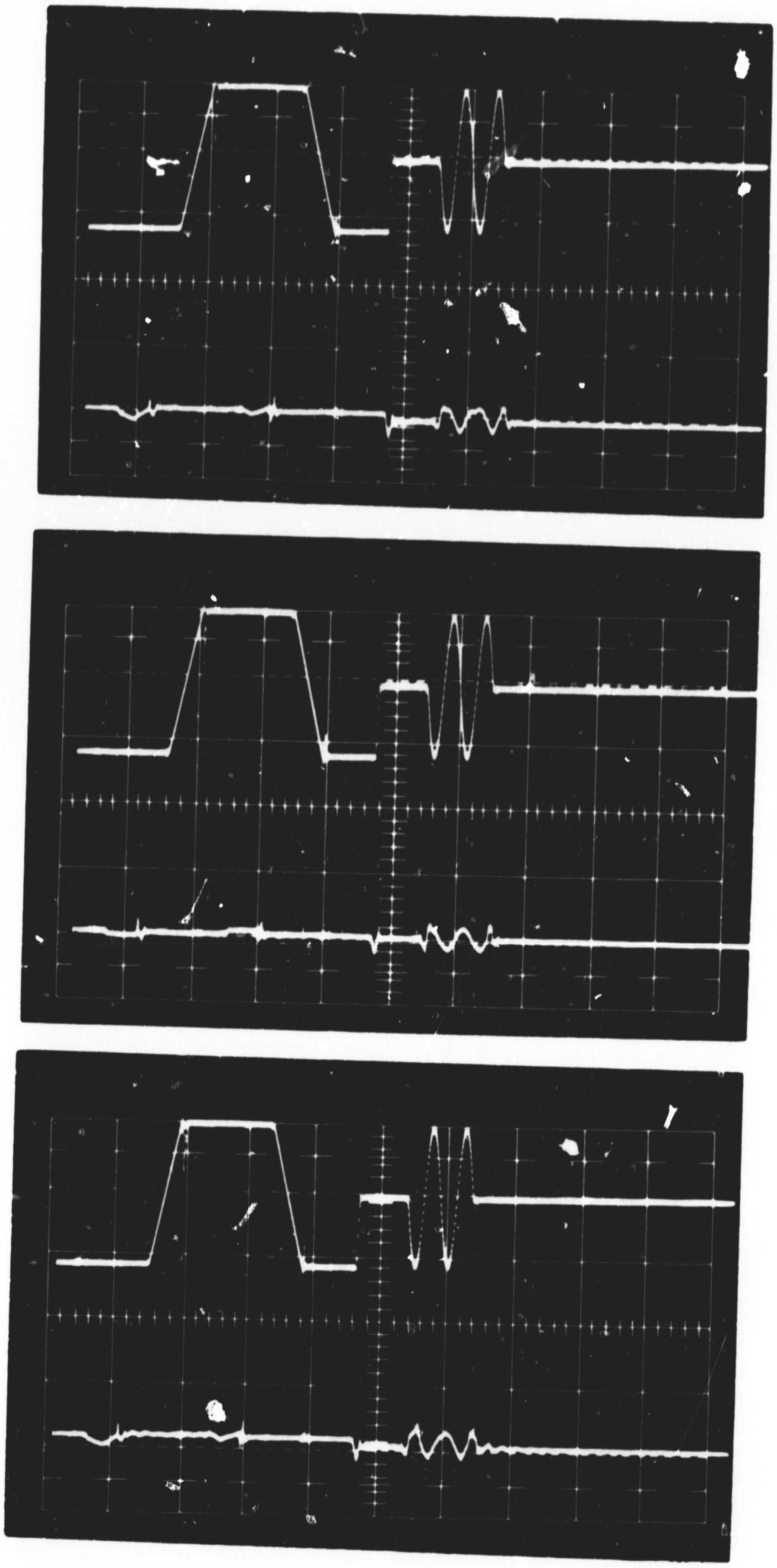

FIGURE D.11. GREEN CONVERGENCE CORRECTION

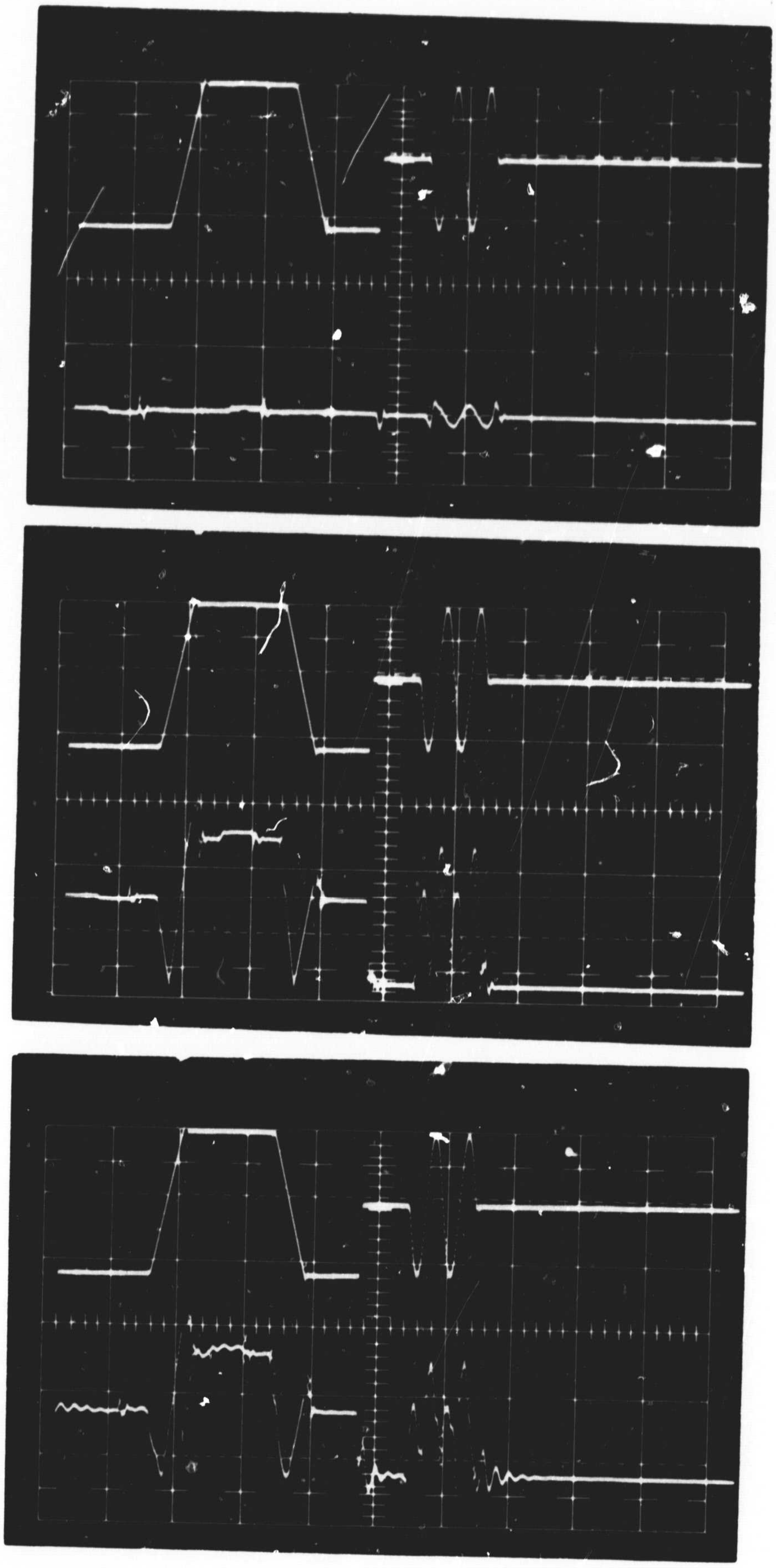

FIGURE D.12. RED CONVERGENCE CORRECTION

While testing the intensification circuits, waveforms were examined at the intensification amplifiers +60 V.D.C. power supply input. These signals, as shown in Figure D.13, were examined while correcting distortions that occurred at the start of displayed vectors. The top picture shows variation in the supply with intensification signals applied. The bottom picture shows the same signal with a 5.0 microfarad capacitor attached between the junction of R16 and R21 of the intensification circuits and ground. Notice the reduction in power supply loading.

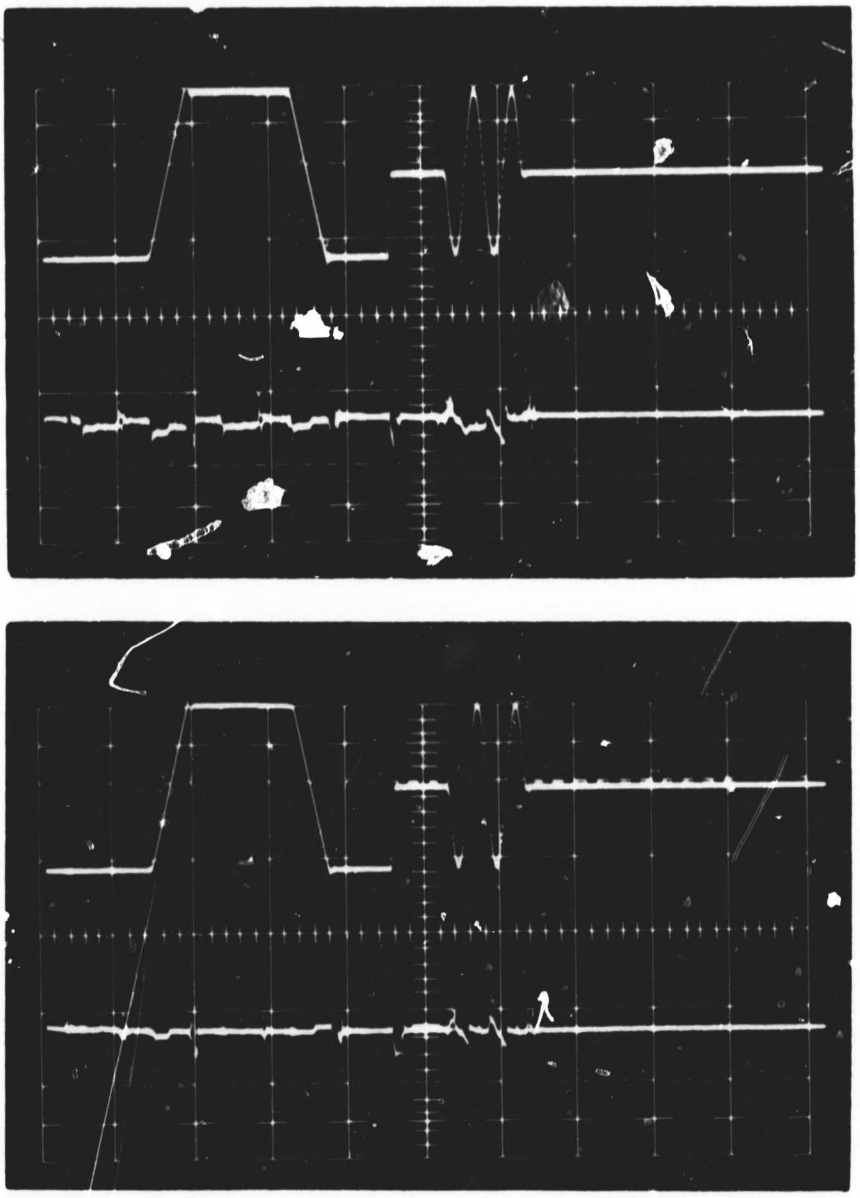

FIGURE D.13. POWER SUPPLY WAVEFORMS

The top trace in figure D. 14 is the "X" input to the interface assembly. Shown in the bottom trace is the output of this assembly . Again, notice the reproduction fidelity.

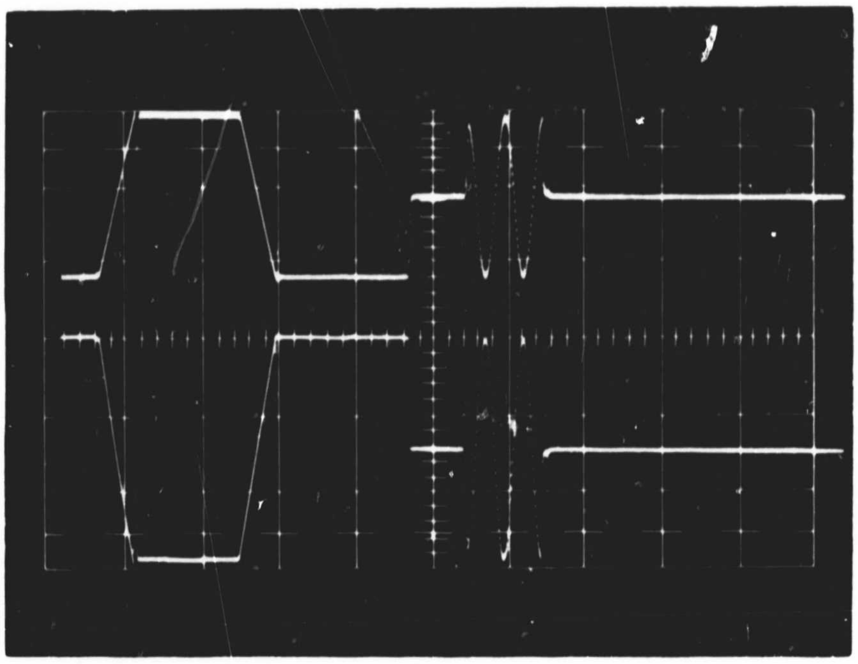

FIGURE D. 14. INTERFACE X DEFLECTION OUTPUT

APPENDIX E. COMPUTER PROGRAM FLOW-CHARTS

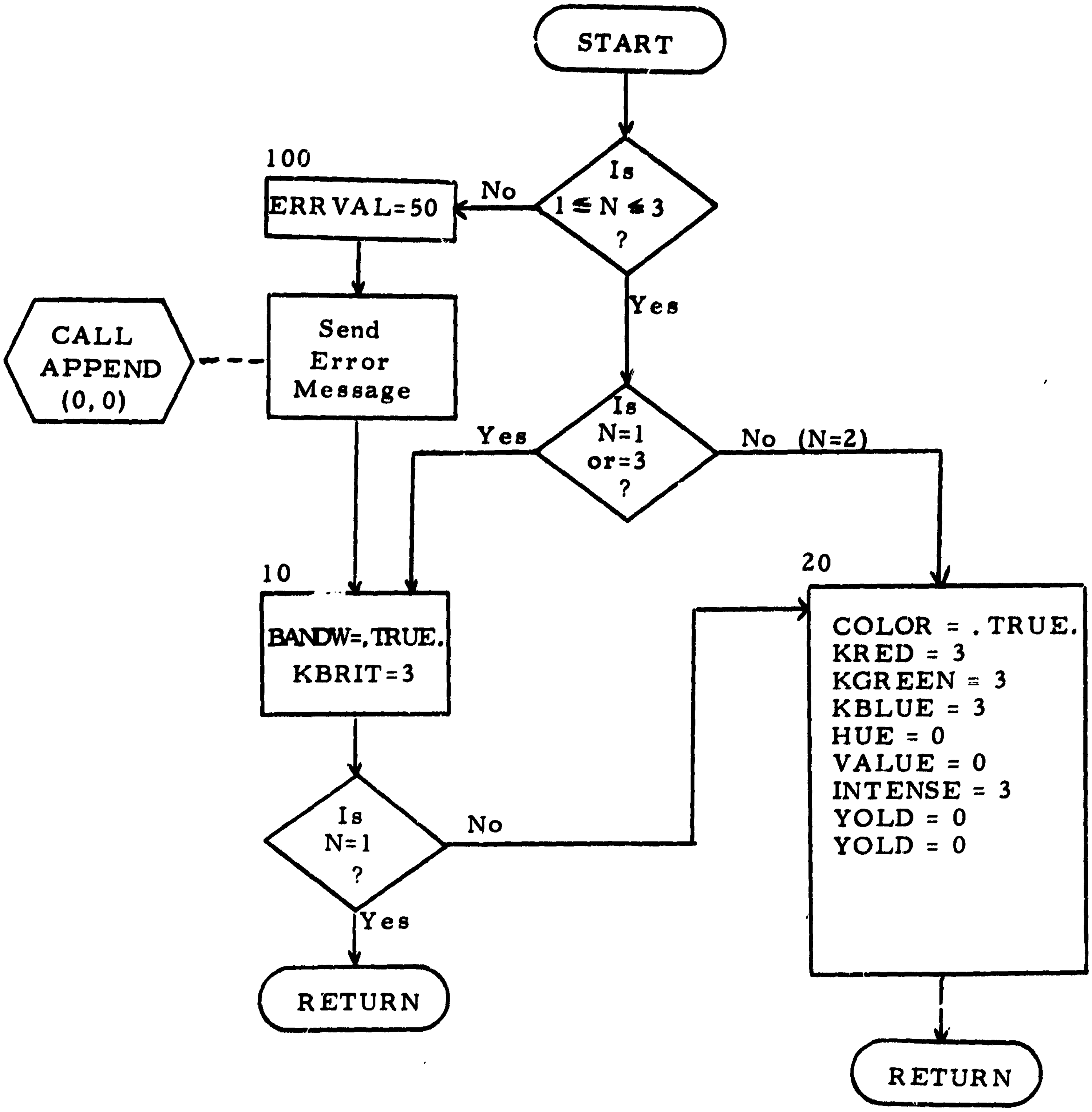
START
Is
1 ≤ N ≤ 3
?
No
100
ERRVAL=50
Yes
Send
Error
Message
CALL
APPEND
(0, 0)
Is
N=1
or=3
?
Yes
No (N=2)
10
BANDW=.TRUE.
KBRIT=3
20
COLOR = .TRUE.
KRED = 3
KGREEN = 3
KBLUE = 3
HUE = 0
VALUE = 0
INTENSE = 3
YOLD = 0
YOLD = 0
Is
N=1
?
No
Yes
RETURN
RETURN

DISDET(N)

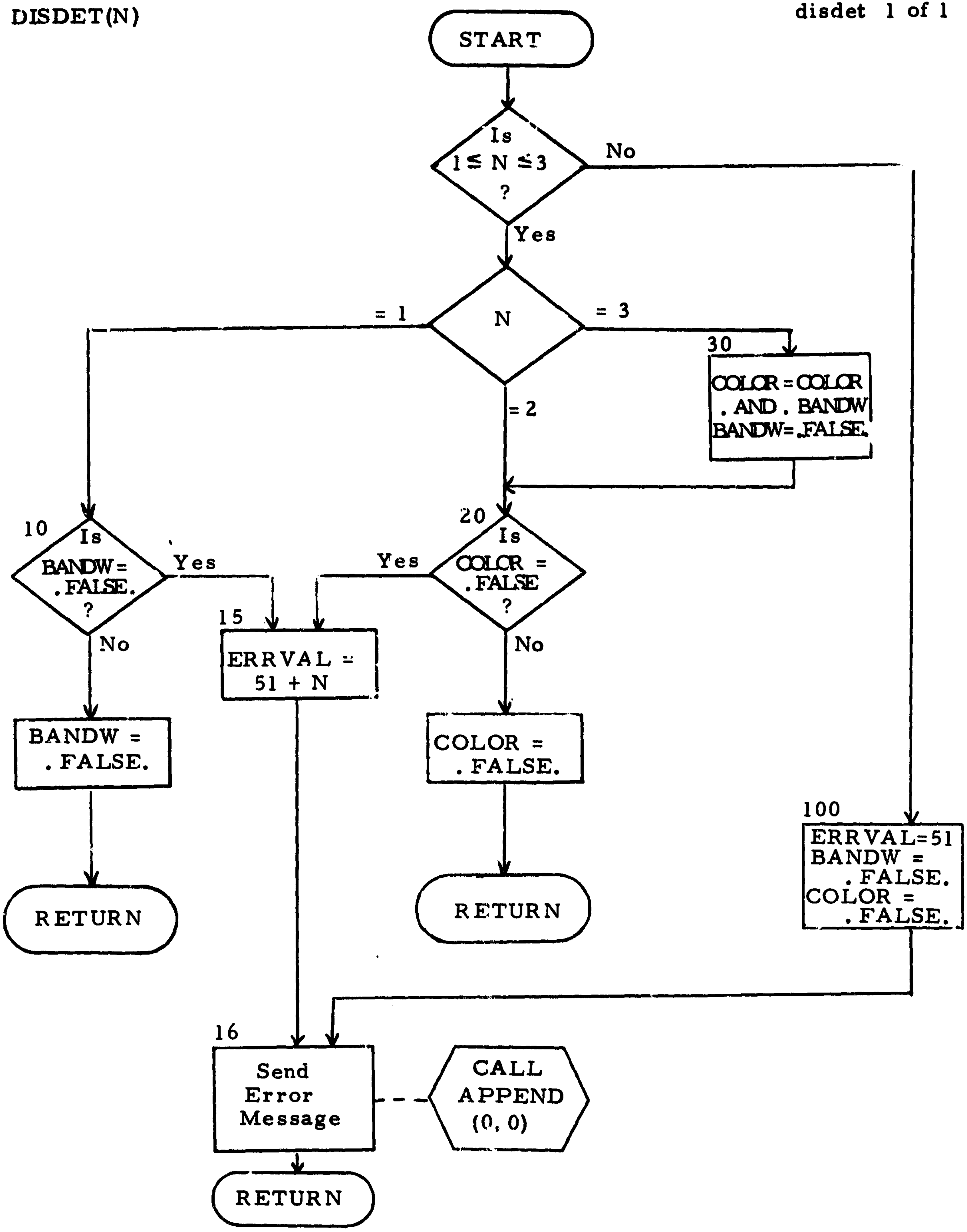
START
Is
1≤ N ≤3
?
No
Yes
N
= 1
= 3
= 2
30
COLOR = COLOR
. AND . BANDW
BANDW= .FALSE.
10
Is
BANDW =
. FALSE.
?
Yes
No
20
Is
COLOR =
. FALSE
?
Yes
No
15
ERRVAL =
51 + N
BANDW =
. FALSE.
COLOR =
. FALSE.
100
ERRVAL=51
BANDW =
. FALSE.
COLOR =
. FALSE.
RETURN
RETURN
16
Send
Error
Message
CALL
APPEND
(0, 0)
RETURN

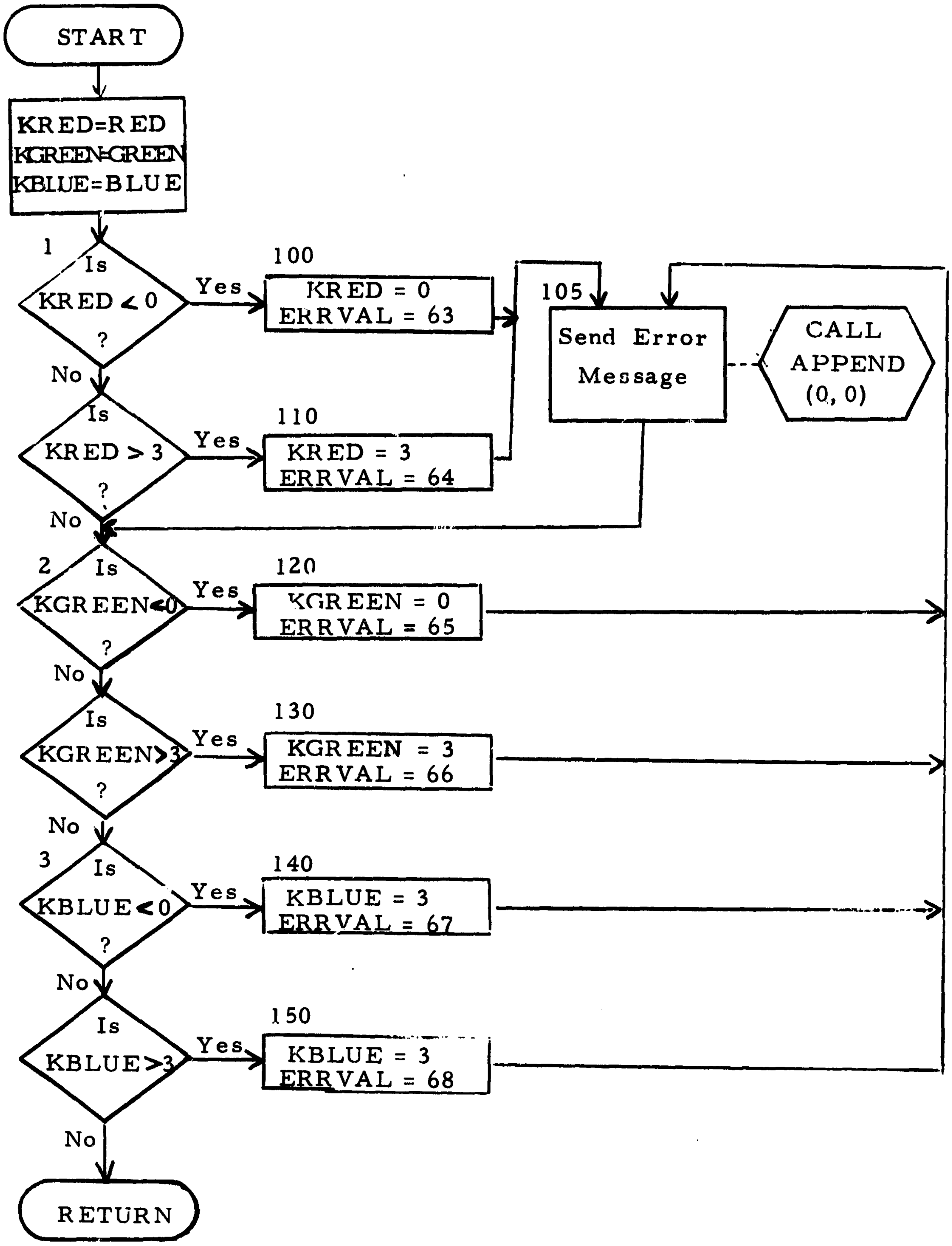
START
KRED=RED
KGREEN=GREEN
KBLUE=BLUE
1
Is KRED < 0 ?
Yes
100
KRED = 0
ERRVAL = 63
No
Is KRED > 3 ?
Yes
110
KRED = 3
ERRVAL = 64
105
Send Error Message
CALL APPEND (0, 0)
No
2
Is KGREEN<0 ?
Yes
120
KGREEN = 0
ERRVAL = 65
No
Is KGREEN>3 ?
Yes
130
KGREEN = 3
ERRVAL = 66
No
3
Is KBLUE<0 ?
Yes
140
KBLUE = 3
ERRVAL = 67
No
Is KBLUE>3
Yes
150
KBLUE = 3
ERRVAL = 68
No
RETURN

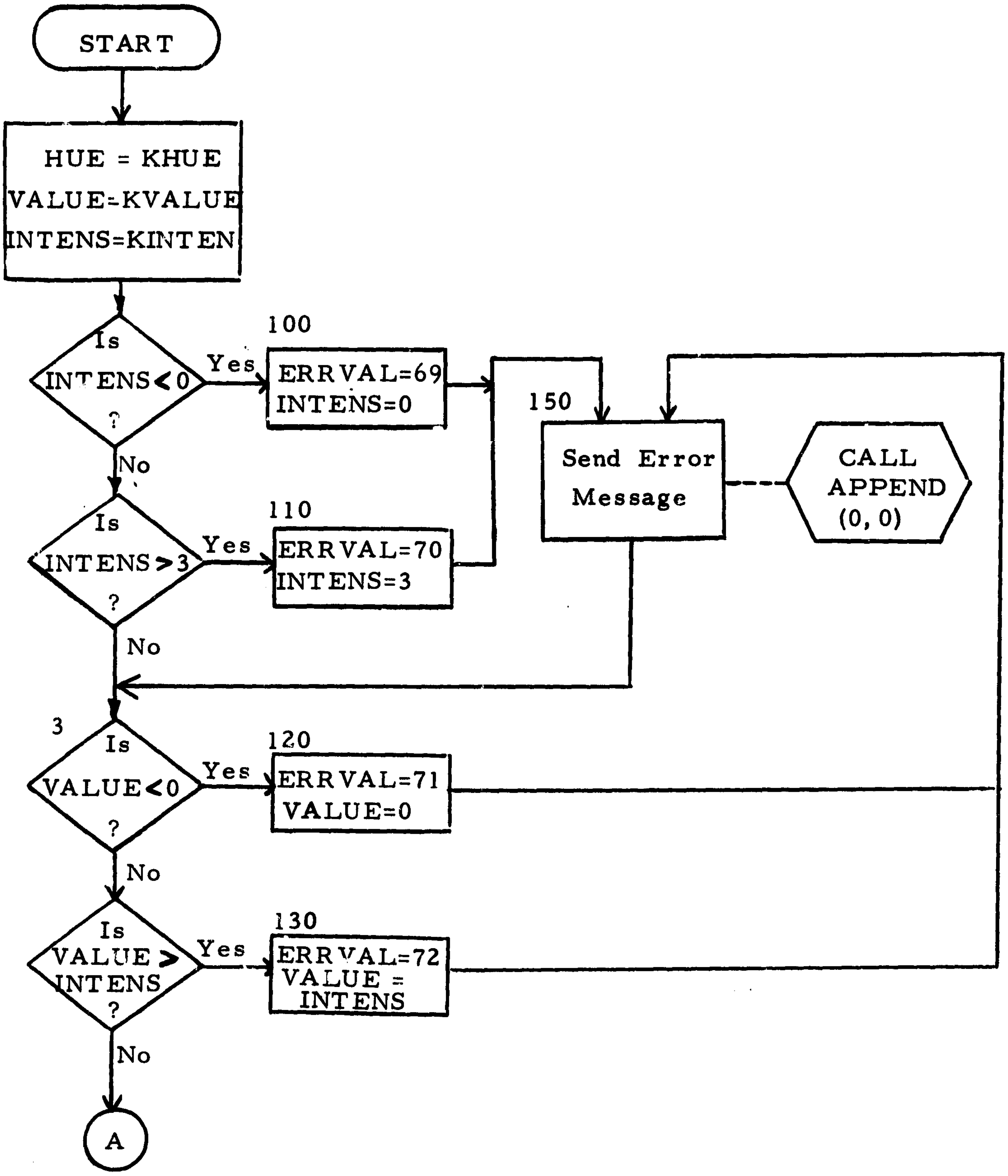
START
HUE = KHUE
VALUE=KVALUE
INTENS=KINTEN
Is INTENS<0 ?
Yes
100
ERRVAL=69
INTENS=0
No
Is INTENS>3 ?
Yes
110
ERRVAL=70
INTENS=3
No
150
Send Error Message
CALL APPEND (0, 0)
3
Is VALUE<0 ?
Yes
120
ERRVAL=71
VALUE=0
No
Is VALUE > INTENS ?
Yes
130
ERRVAL=72
VALUE = INTENS
No
A

colors 2 of 2

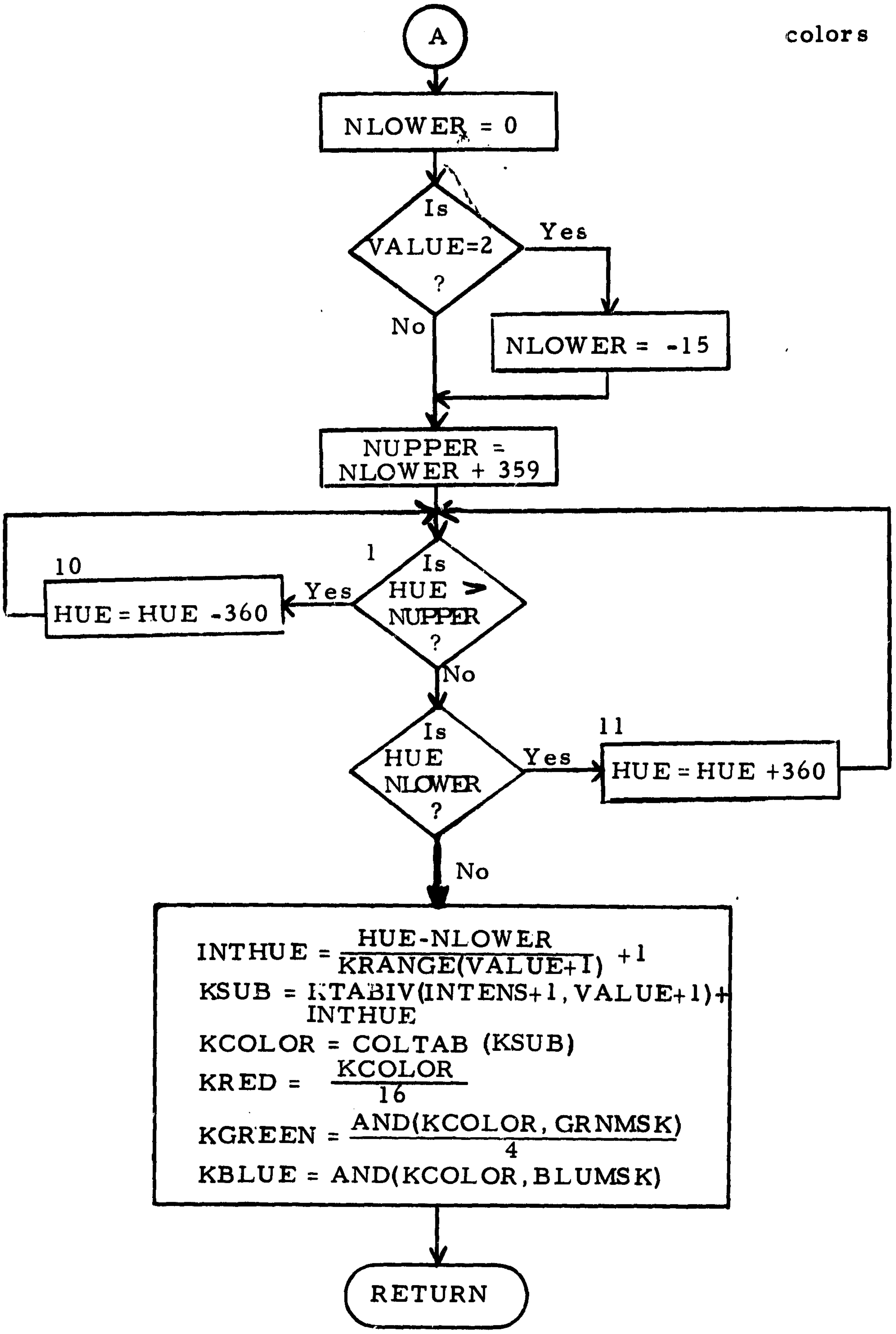
A
NLOWER = 0
Is VALUE=2 ?
Yes
No
NLOWER = -15
NUPPER = NLOWER + 359
1
Is HUE > NUPPER ?
Yes
10
HUE = HUE -360
No
Is HUE NLOWER ?
Yes
11
HUE = HUE +360
No
INTHUE = HUE-NLOWER / KRANGE(VALUE+1) +1
KSUB = KTABIV(INTENS+1, VALUE+1)+ INTHUE
KCOLOR = COLTAB (KSUB)
KRED = KCOLOR / 16
KGREEN = AND(KCOLOR, GRNMSK) / 4
KBLUE = AND(KCOLOR, BLUMSK)
RETURN

CSETPT(X, Y)

csetpt 1 of 1

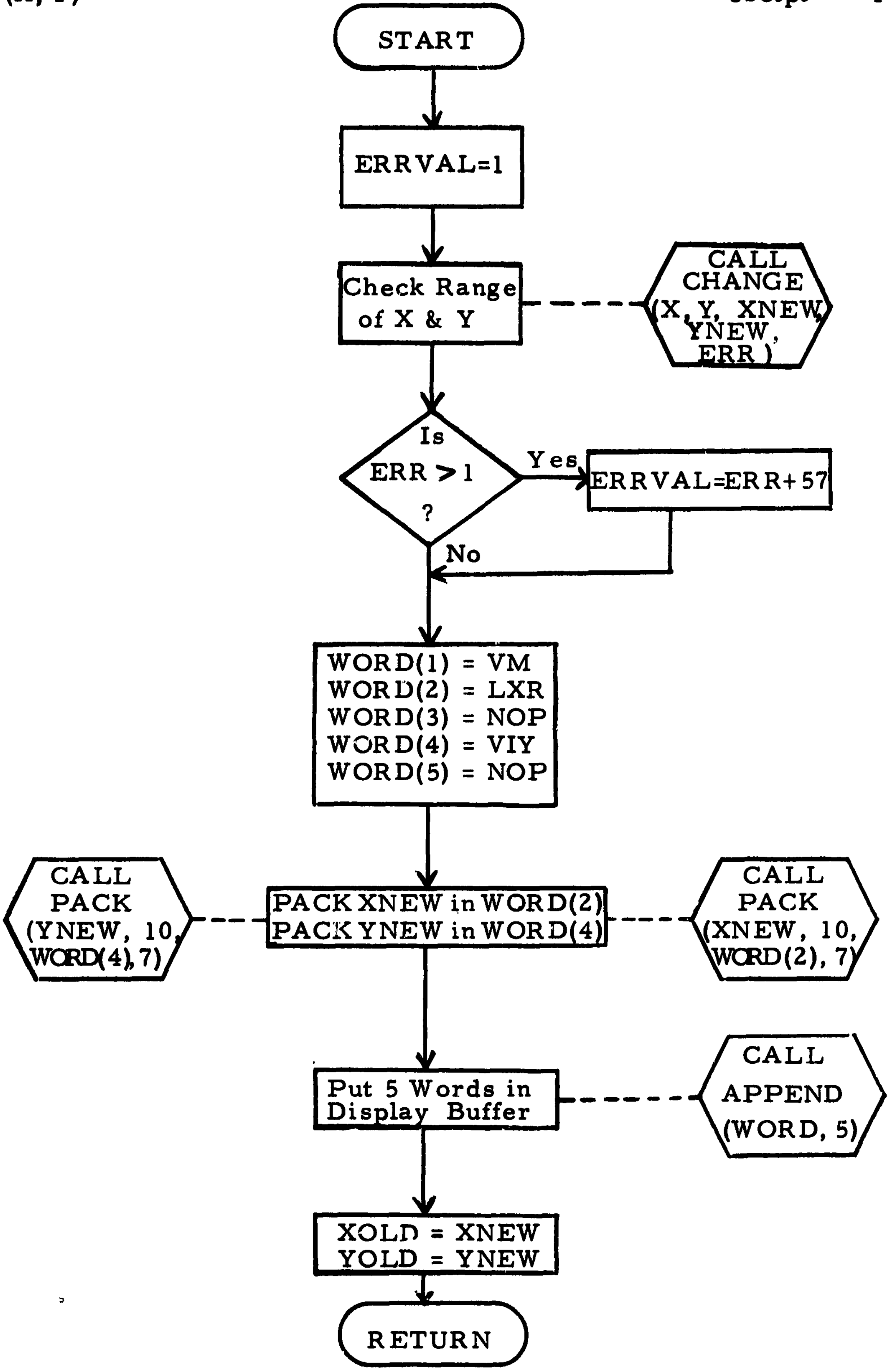

CVECT(X, Y)

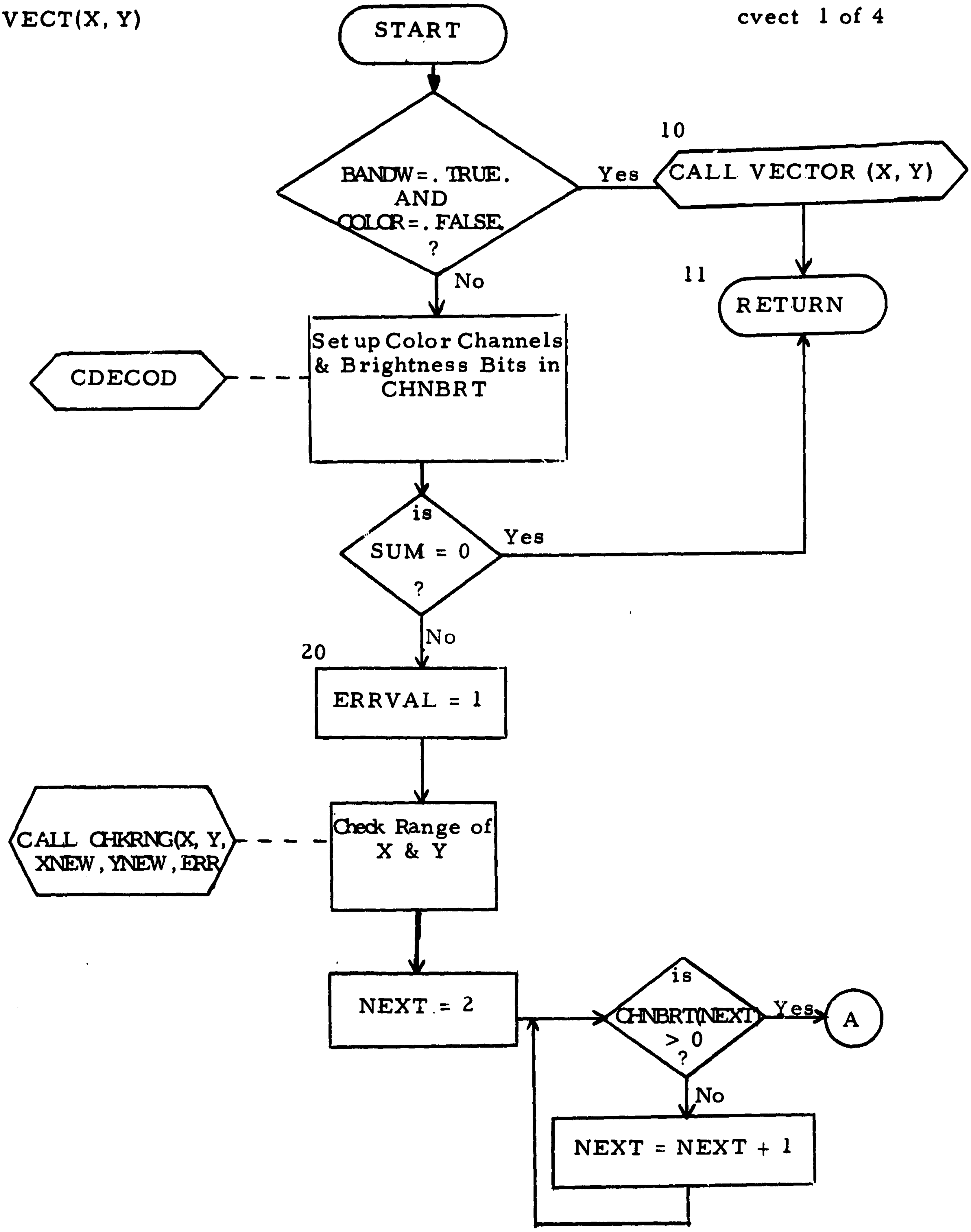
START
BANDW = . TRUE. AND COLOR = . FALSE. ?
Yes
10
CALL VECTOR (X, Y)
No
11
RETURN
Set up Color Channels & Brightness Bits in CHNBRT
CDECOD
is SUM = 0 ?
Yes
No
20
ERRVAL = 1
CALL CHKRNG(X, Y, XNEW, YNEW, ERR)
Check Range of X & Y
NEXT = 2
is CHNBRT(NEXT) > 0 ?
Yes
A
No
NEXT = NEXT + 1

cvect 2 of 4

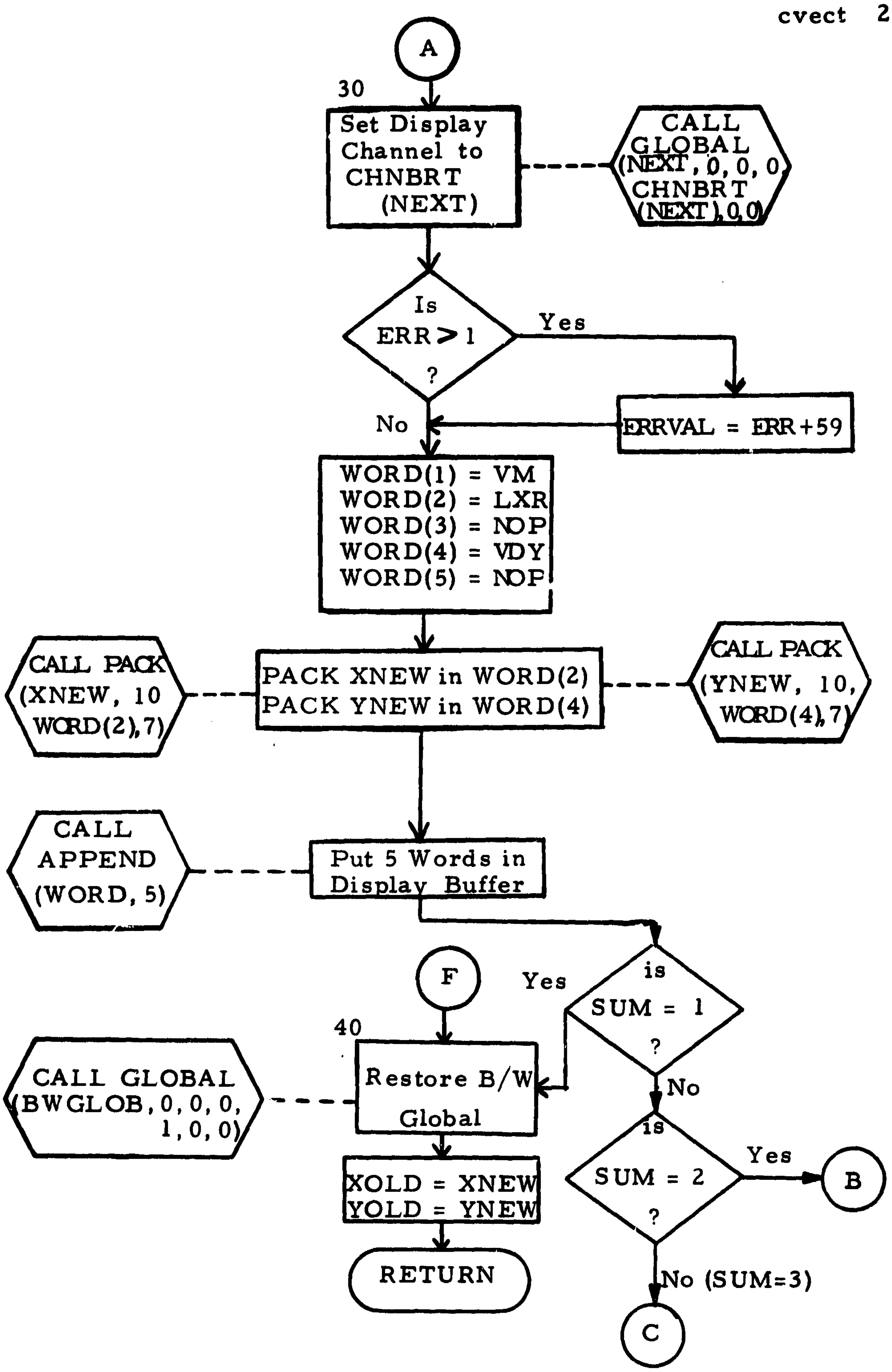
A
30
Set Display Channel to CHNBRT (NEXT)
CALL GLOBAL (NEXT, 0, 0, 0 CHNBRT (NEXT), 0, 0)
Is ERR > 1 ?
Yes
ERRVAL = ERR+59
No
WORD(1) = VM
WORD(2) = LXR
WORD(3) = NOP
WORD(4) = VDY
WORD(5) = NOP
CALL PACK (XNEW, 10 WORD(2),7)
PACK XNEW in WORD(2)
PACK YNEW in WORD(4)
CALL PACK (YNEW, 10, WORD(4),7)
CALL APPEND (WORD, 5)
Put 5 Words in Display Buffer
F
Yes
is SUM = 1 ?
40
CALL GLOBAL (BWGLOB, 0, 0, 0, 1, 0, 0)
Restore B/W Global
No
is SUM = 2 ?
Yes
B
XOLD = XNEW
YOLD = YNEW
RETURN
No (SUM=3)
C

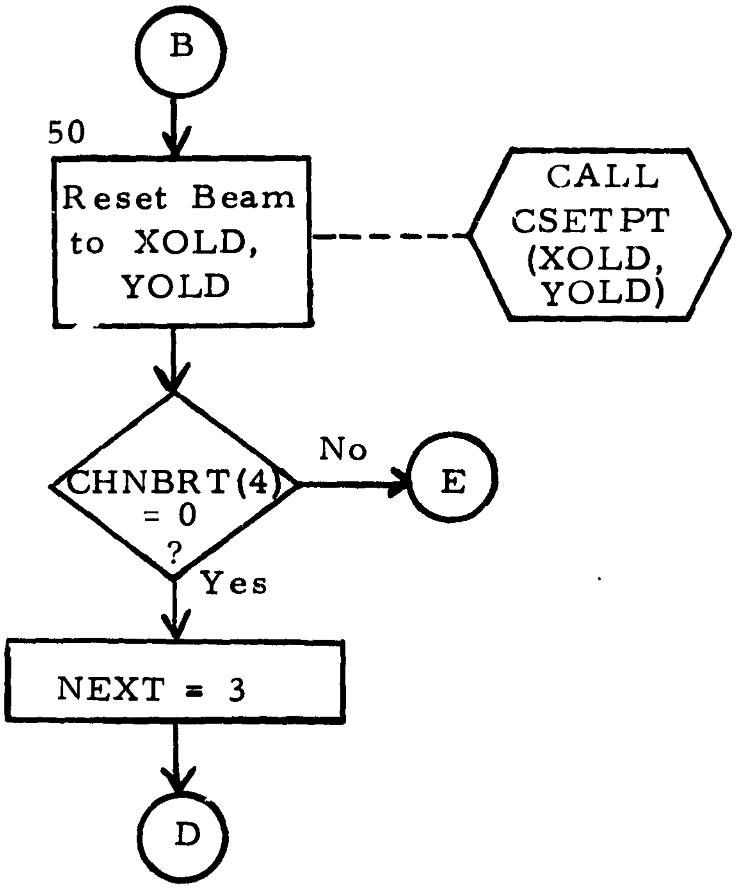
B
50
Reset Beam to XOLD, YOLD
CALL CSETPT (XOLD, YOLD)
CHNBRT(4) = 0 ?
No
E
Yes
NEXT = 3
D

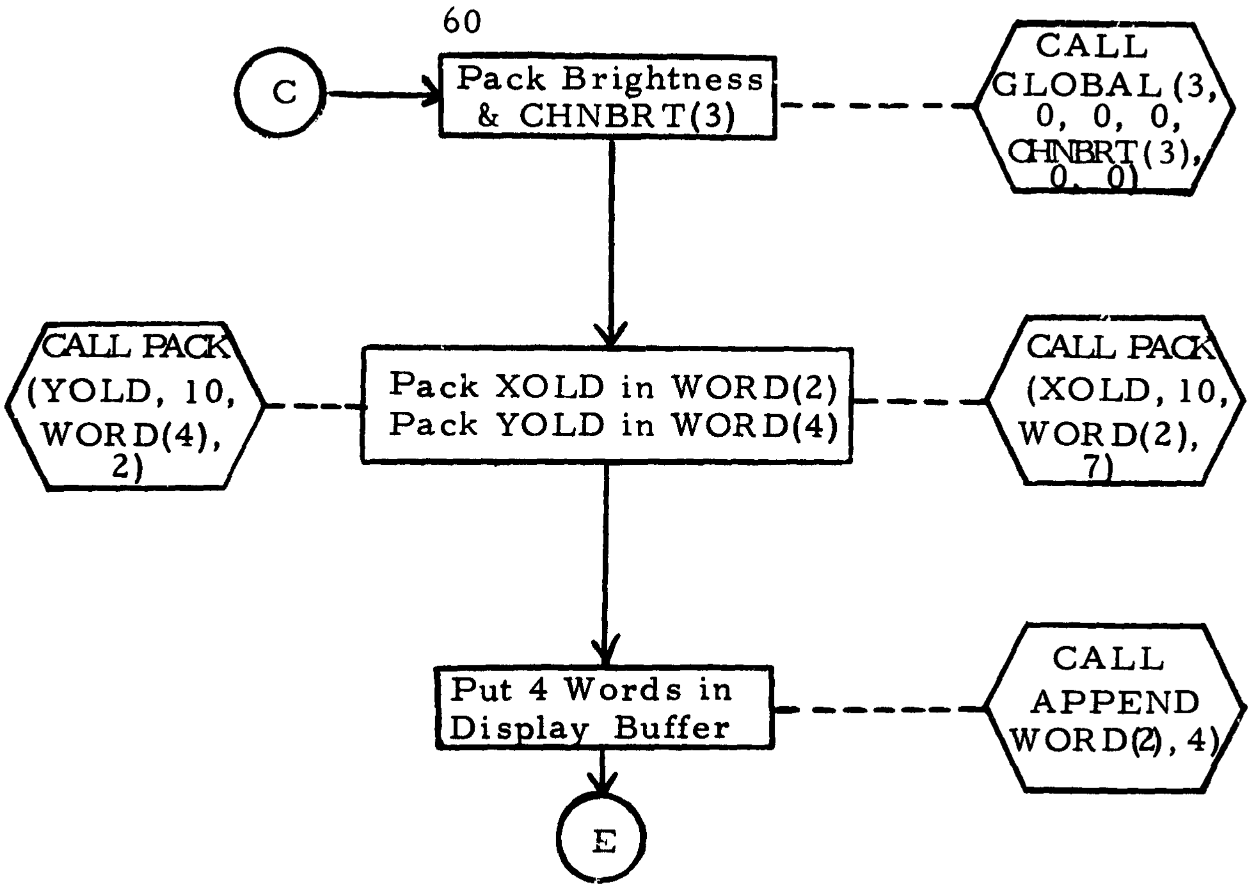
60
C
Pack Brightness & CHNBRT(3)
CALL GLOBAL (3, 0, 0, 0, CHNBRT(3), 0, 0)
CALL PACK (YOLD, 10, WORD(4), 2)
Pack XOLD in WORD(2)
Pack YOLD in WORD(4)
CALL PACK (XOLD, 10, WORD(2), 7)
Put 4 Words in Display Buffer
CALL APPEND WORD(2), 4)
E

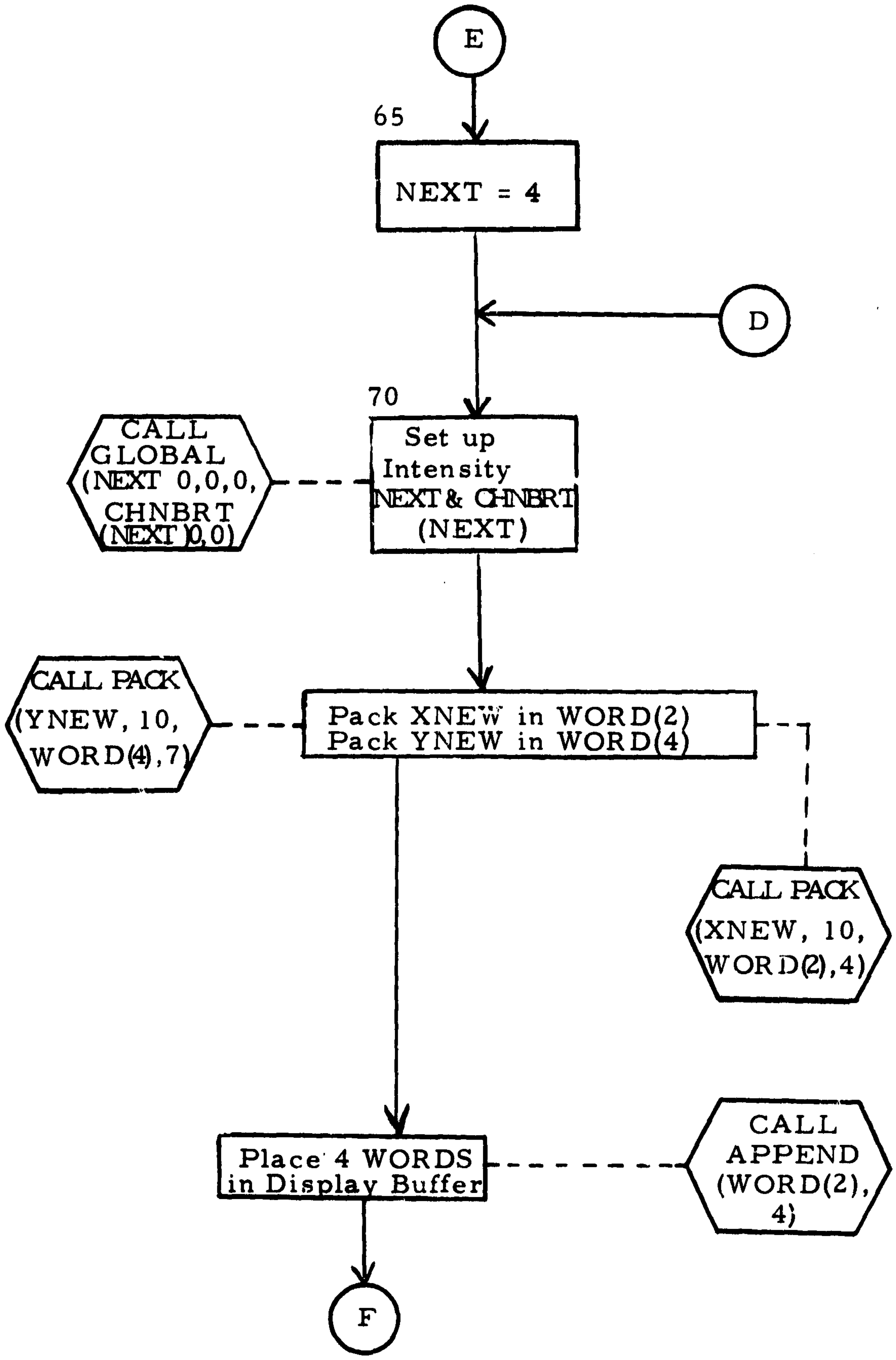
E
65
NEXT = 4
D
70
Set up Intensity NEXT & CHNBRT (NEXT)
CALL GLOBAL (NEXT 0,0,0, CHNBRT (NEXT)0,0)
CALL PACK (YNEW, 10, WORD(4),7)
Pack XNEW in WORD(2)
Pack YNEW in WORD(4)
CALL PACK (XNEW, 10, WORD(2),4)
Place 4 WORDS in Display Buffer
CALL APPEND (WORD(2), 4)
F

CCIRCL(X, Y, RAD)

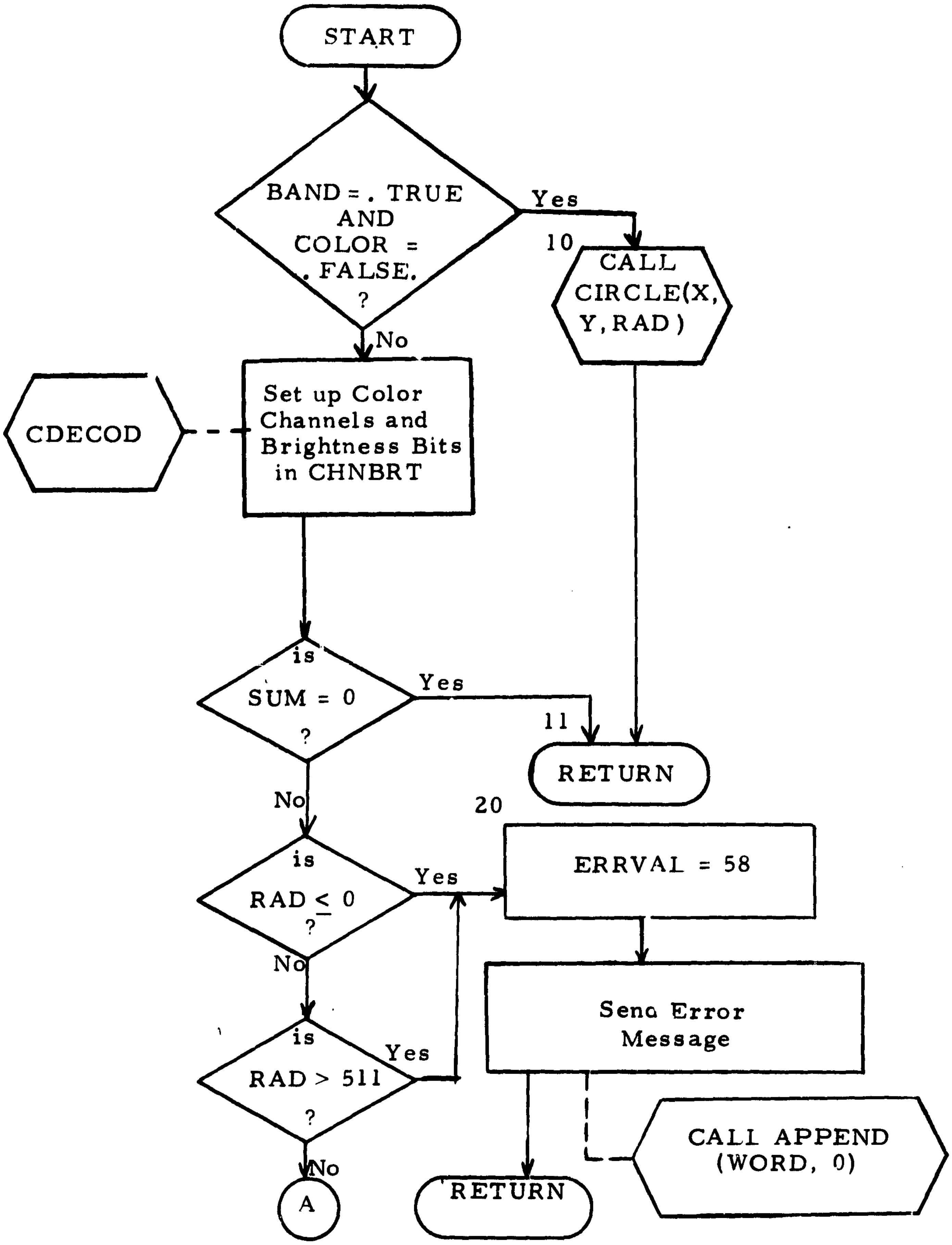

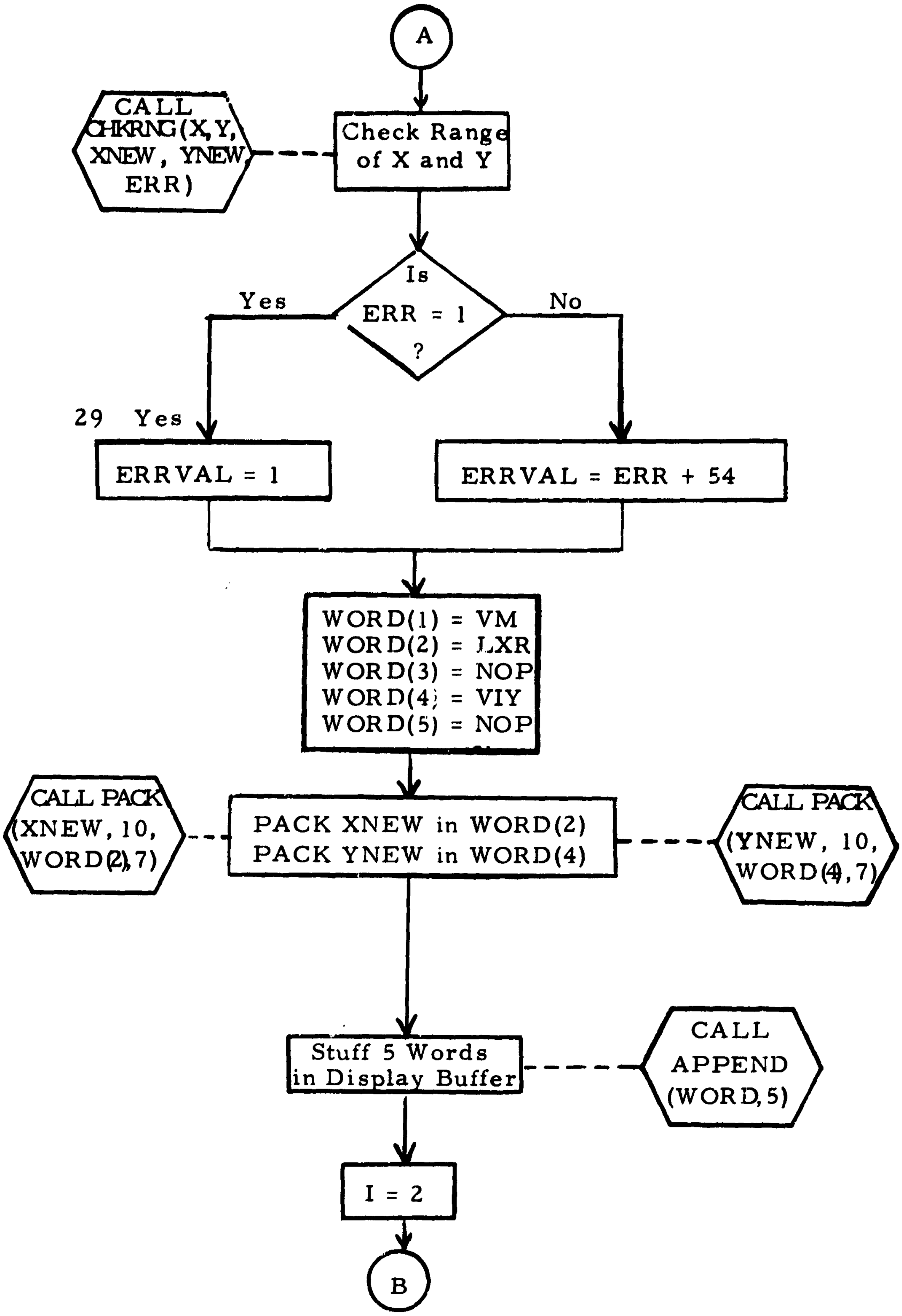
A
CALL CHKRNG(X,Y, XNEW, YNEW, ERR)
Check Range of X and Y
Is ERR = 1 ?
Yes
No
29 Yes
ERRVAL = 1
ERRVAL = ERR + 54
WORD(1) = VM
WORD(2) = LXR
WORD(3) = NOP
WORD(4) = VIY
WORD(5) = NOP
CALL PACK (XNEW, 10, WORD(2),7)
PACK XNEW in WORD(2)
PACK YNEW in WORD(4)
CALL PACK (YNEW, 10, WORD(4),7)
Stuff 5 Words in Display Buffer
CALL APPEND (WORD, 5)
I = 2
B

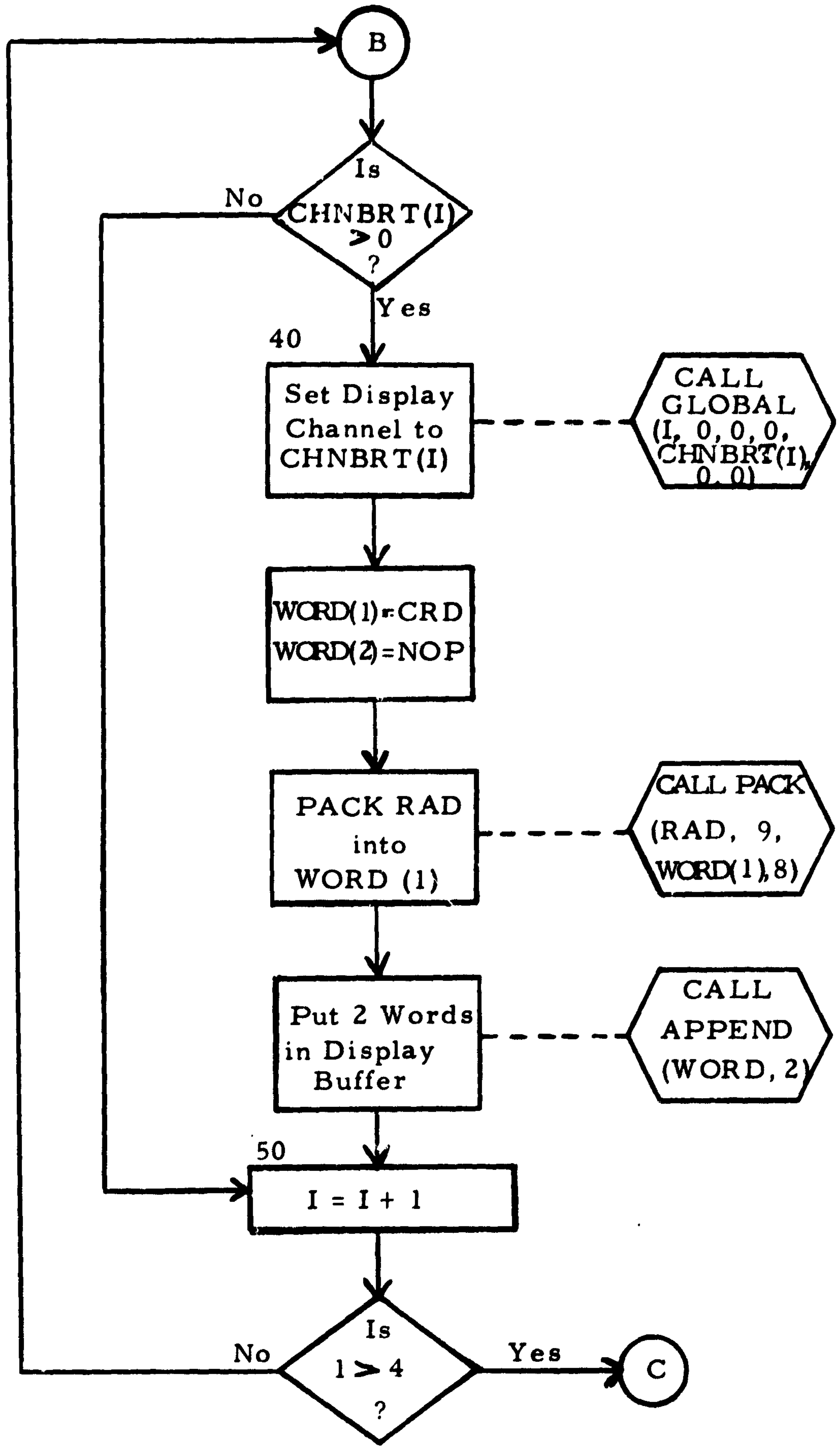
B
Is
CHNBRT(I)
> 0
?
No
Yes
40
Set Display Channel to CHNBRT(I)
CALL GLOBAL (I, 0, 0, 0, CHNBRT(I), 0, 0)
WORD(1)=CRD
WORD(2)=NOP
PACK RAD into WORD (1)
CALL PACK (RAD, 9, WORD(1), 8)
Put 2 Words in Display Buffer
CALL APPEND (WORD, 2)
50
I = I + 1
Is
I > 4
?
No
Yes
C

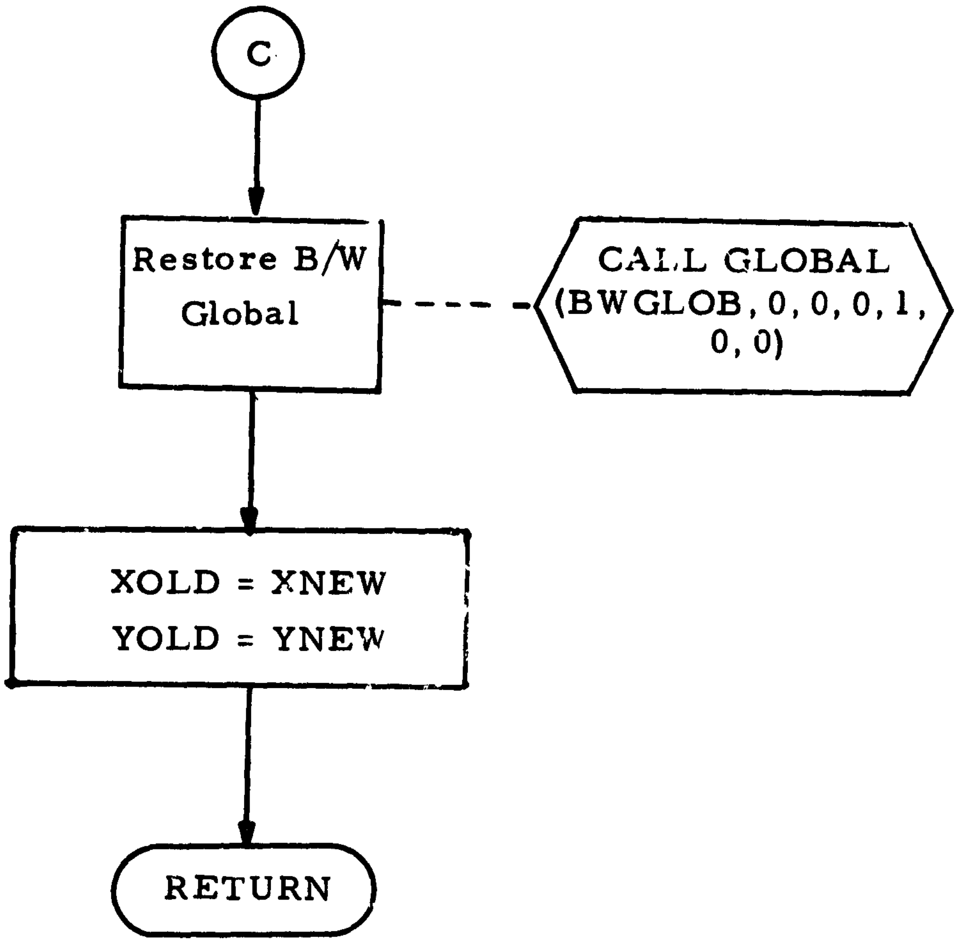
C
Restore B/W Global
CALL GLOBAL (BWGLOB, 0, 0, 0, 1, 0, 0)
XOLD = XNEW
YOLD = YNEW
RETURN

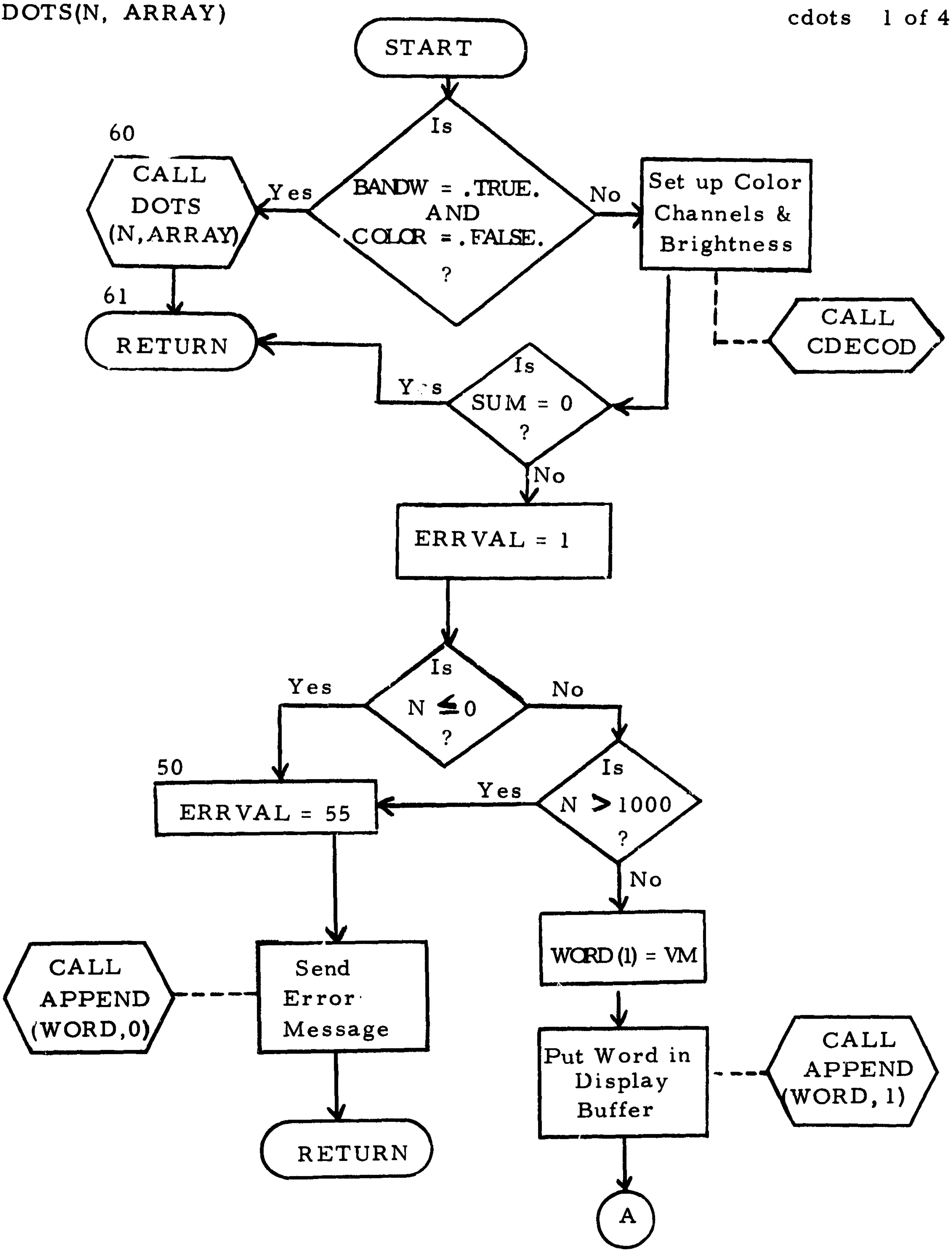
START
Is BANDW = .TRUE. AND COLOR = .FALSE. ?
Yes
No
60
CALL DOTS (N,ARRAY)
61
RETURN
Set up Color Channels & Brightness
CALL CDECOD
Is SUM = 0 ?
Yes
No
ERRVAL = 1
Is N ≤ 0 ?
Yes
No
50
ERRVAL = 55
Is N > 1000 ?
Yes
No
CALL APPEND (WORD,0)
Send Error Message
RETURN
WORD(1) = VM
Put Word in Display Buffer
CALL APPEND (WORD, 1)
A

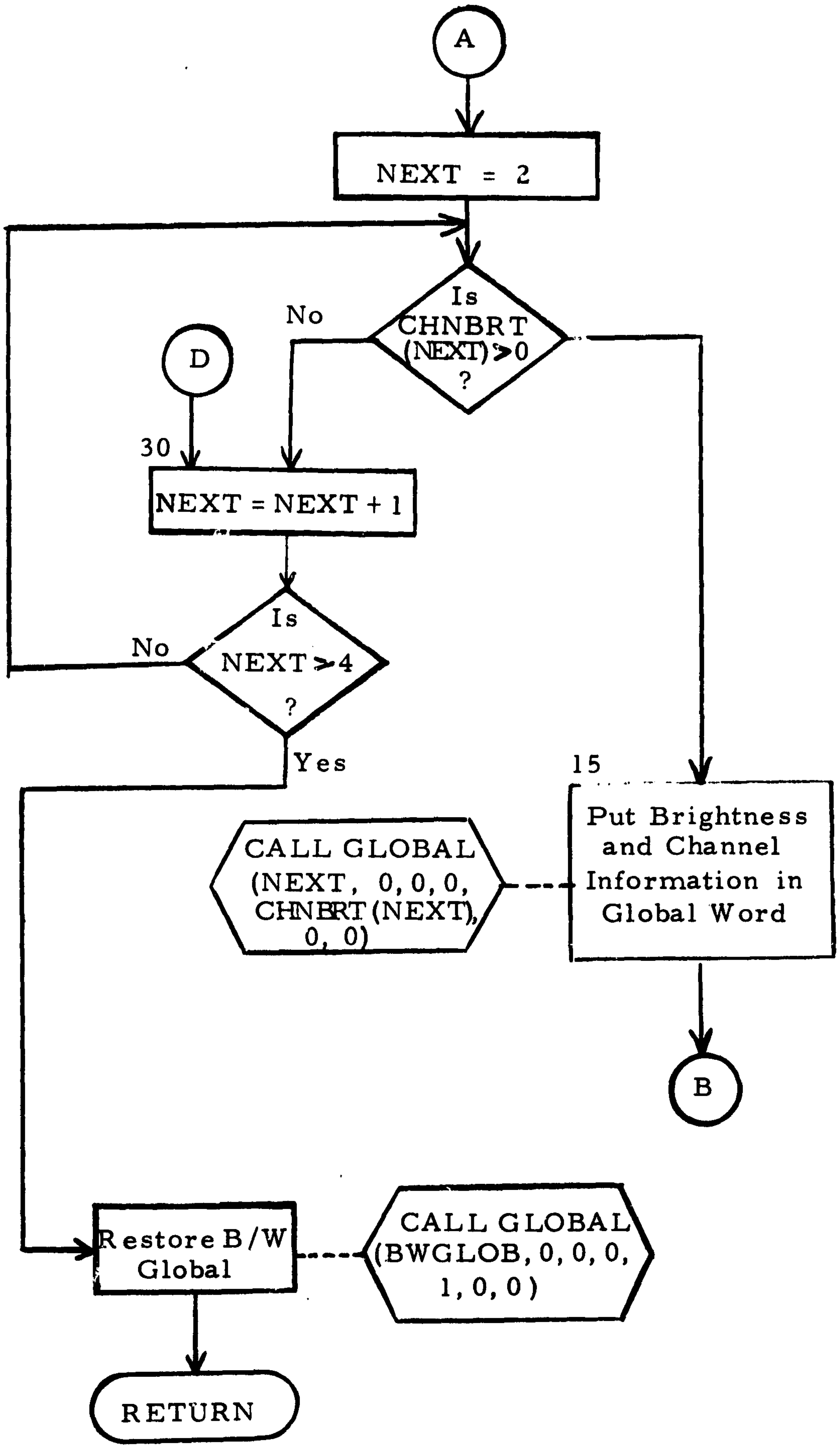
A
NEXT = 2
Is CHNBRT (NEXT) > 0 ?
No
D
30
NEXT = NEXT + 1
Is NEXT > 4 ?
No
Yes
15
Put Brightness and Channel Information in Global Word
CALL GLOBAL (NEXT, 0, 0, 0, CHNBRT (NEXT), 0, 0)
B
Restore B/W Global
CALL GLOBAL (BWGLOB, 0, 0, 0, 1, 0, 0)
RETURN

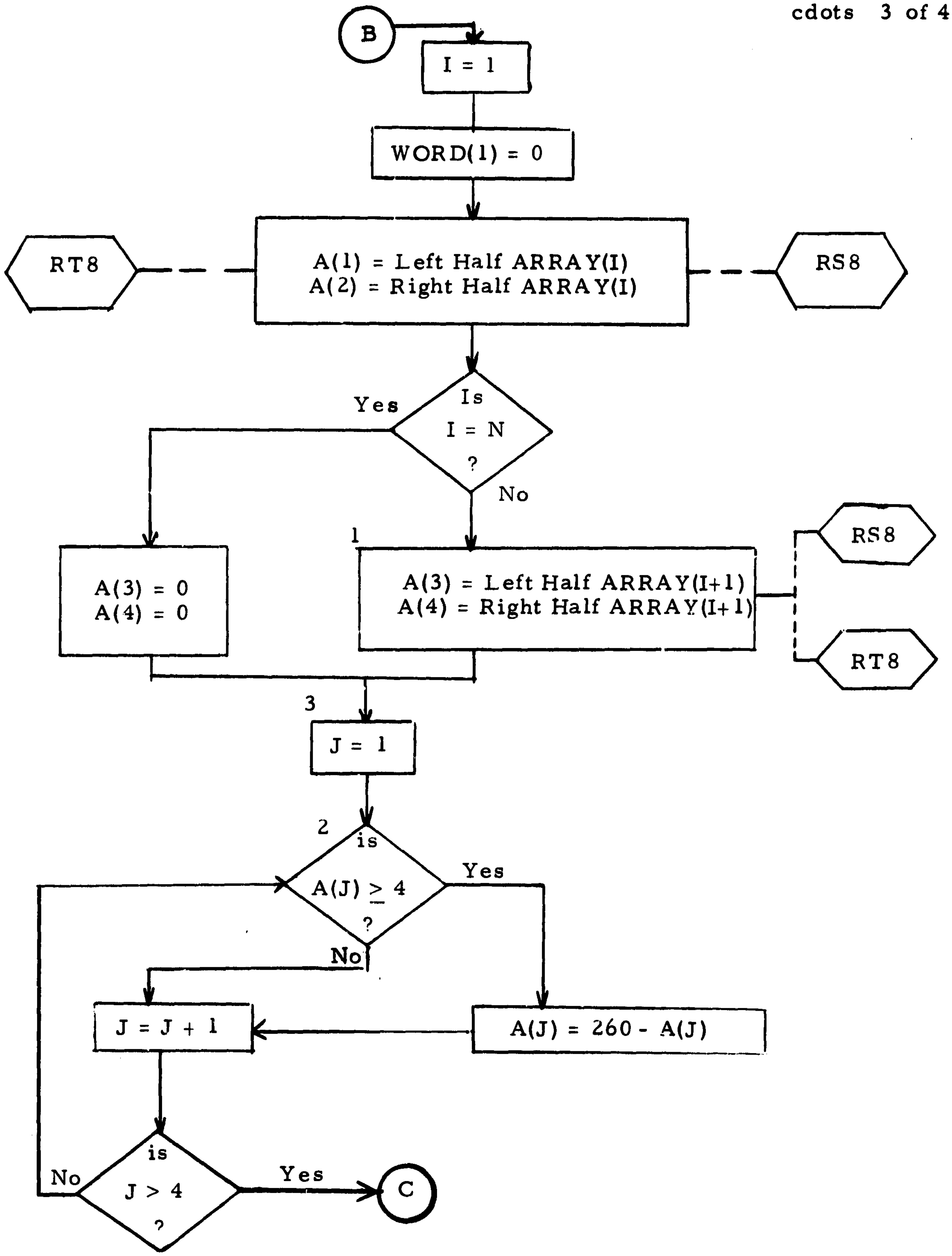
B
I = 1
WORD(1) = 0
RT8
A(1) = Left Half ARRAY(I)
A(2) = Right Half ARRAY(I)
RS8
Is
I = N
?
Yes
No
1
A(3) = 0
A(4) = 0
A(3) = Left Half ARRAY(I+1)
A(4) = Right Half ARRAY(I+1)
RS8
RT8
3
J = 1
2
is
A(J) $\geq$ 4
?
Yes
No
J = J + 1
A(J) = 260 - A(J)
is
J > 4
?
No
Yes
C

cdots 4 of 4

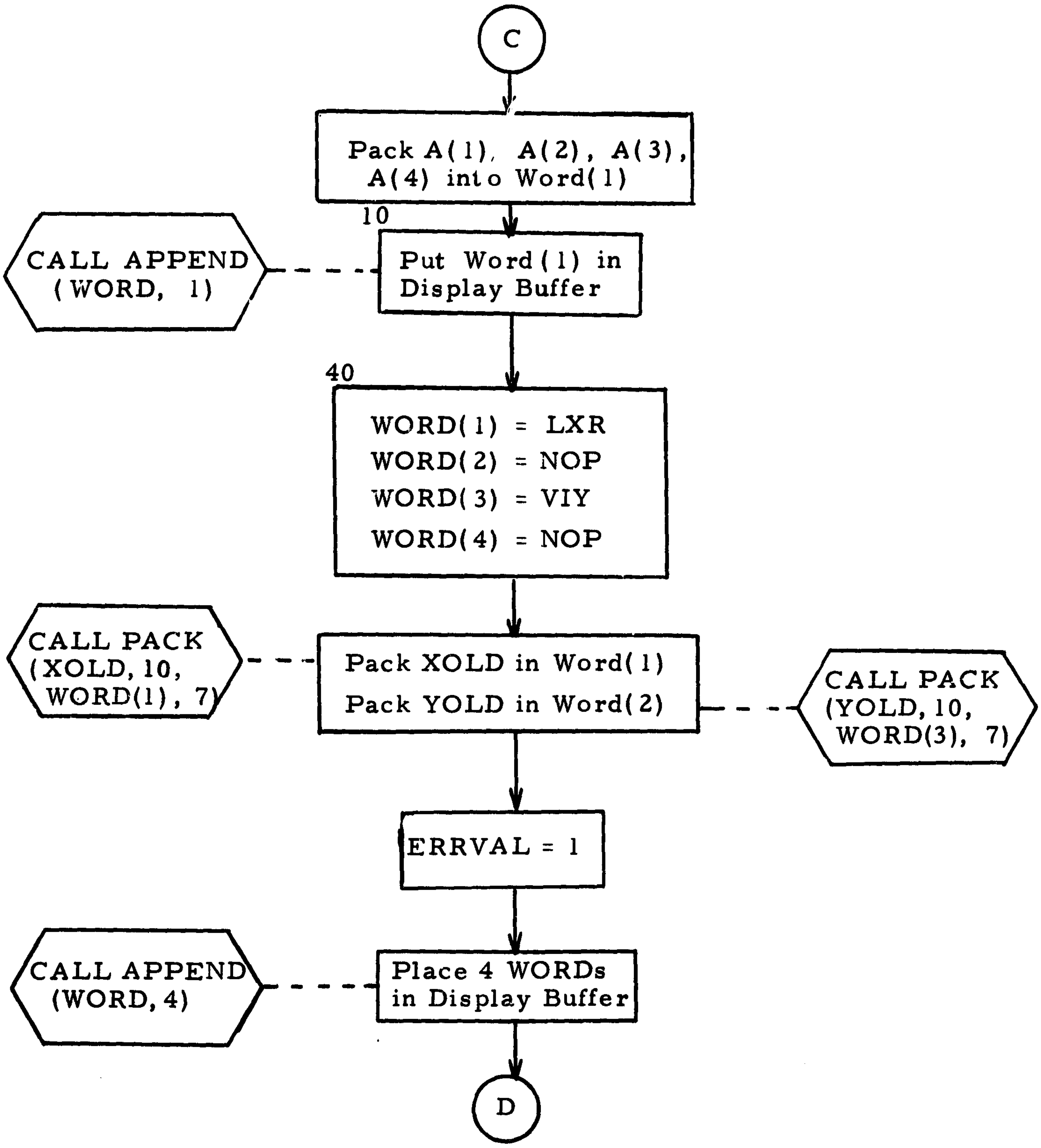
C
Pack A(1), A(2), A(3), A(4) into Word(1)
10
Put Word(1) in Display Buffer
CALL APPEND (WORD, 1)
40
WORD(1) = LXR
WORD(2) = NOP
WORD(3) = VIY
WORD(4) = NOP
CALL PACK (XOLD, 10, WORD(1), 7)
Pack XOLD in Word(1)
Pack YOLD in Word(2)
CALL PACK (YOLD, 10, WORD(3), 7)
ERRVAL = 1
CALL APPEND (WORD, 4)
Place 4 WORDs in Display Buffer
D

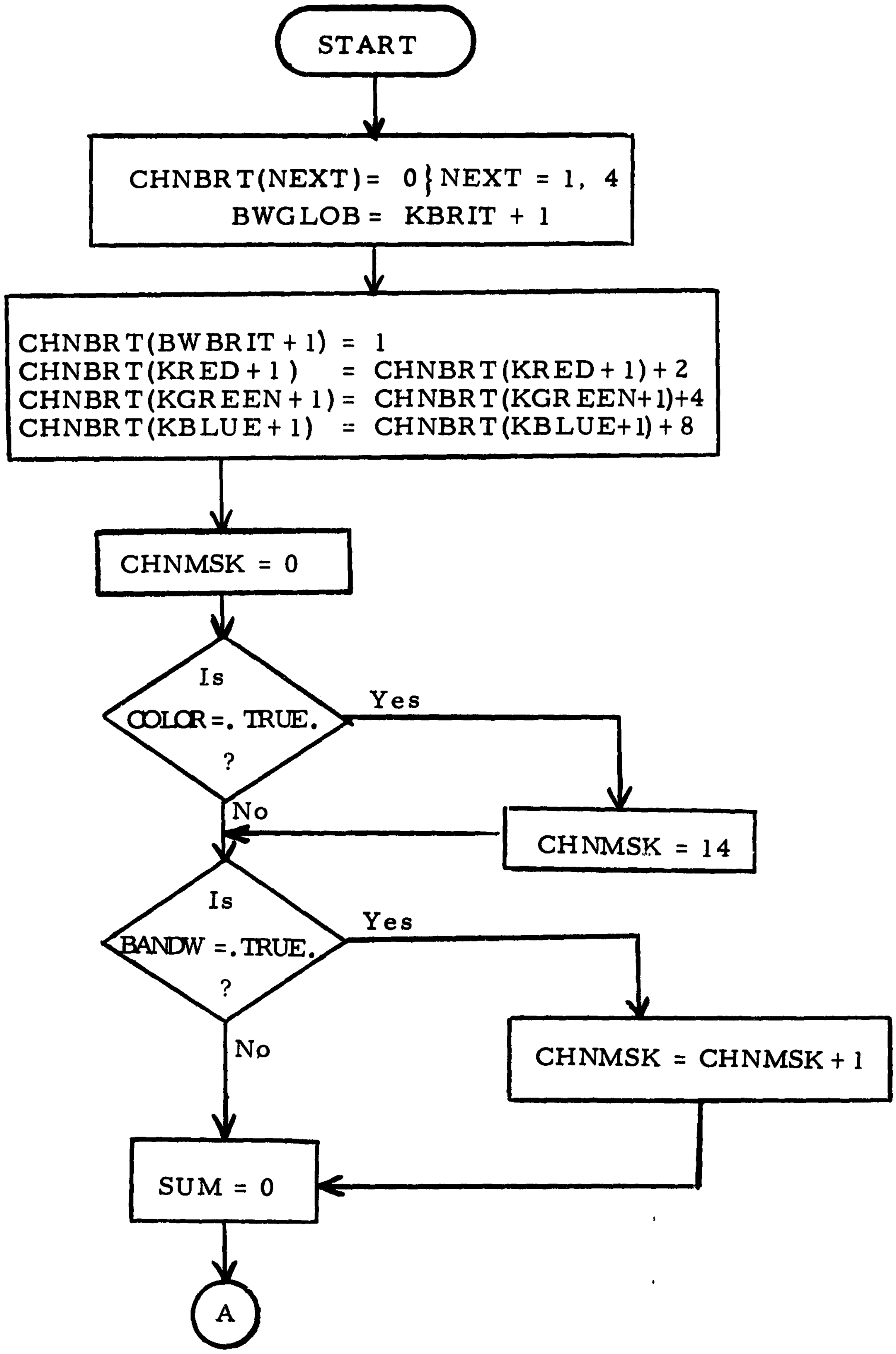
START
CHNBRT(NEXT)= 0}NEXT = 1, 4
BWGLOB = KBRIT + 1
CHNBRT(BWBRIT + 1) = 1
CHNBRT(KRED + 1) = CHNBRT(KRED + 1) + 2
CHNBRT(KGREEN + 1) = CHNBRT(KGREEN+1)+4
CHNBRT(KBLUE + 1) = CHNBRT(KBLUE+1) + 8
CHNMSK = 0
Is COLOR =. TRUE. ?
Yes
No
CHNMSK = 14
Is BANDW =. TRUE. ?
Yes
No
CHNMSK = CHNMSK + 1
SUM = 0
A

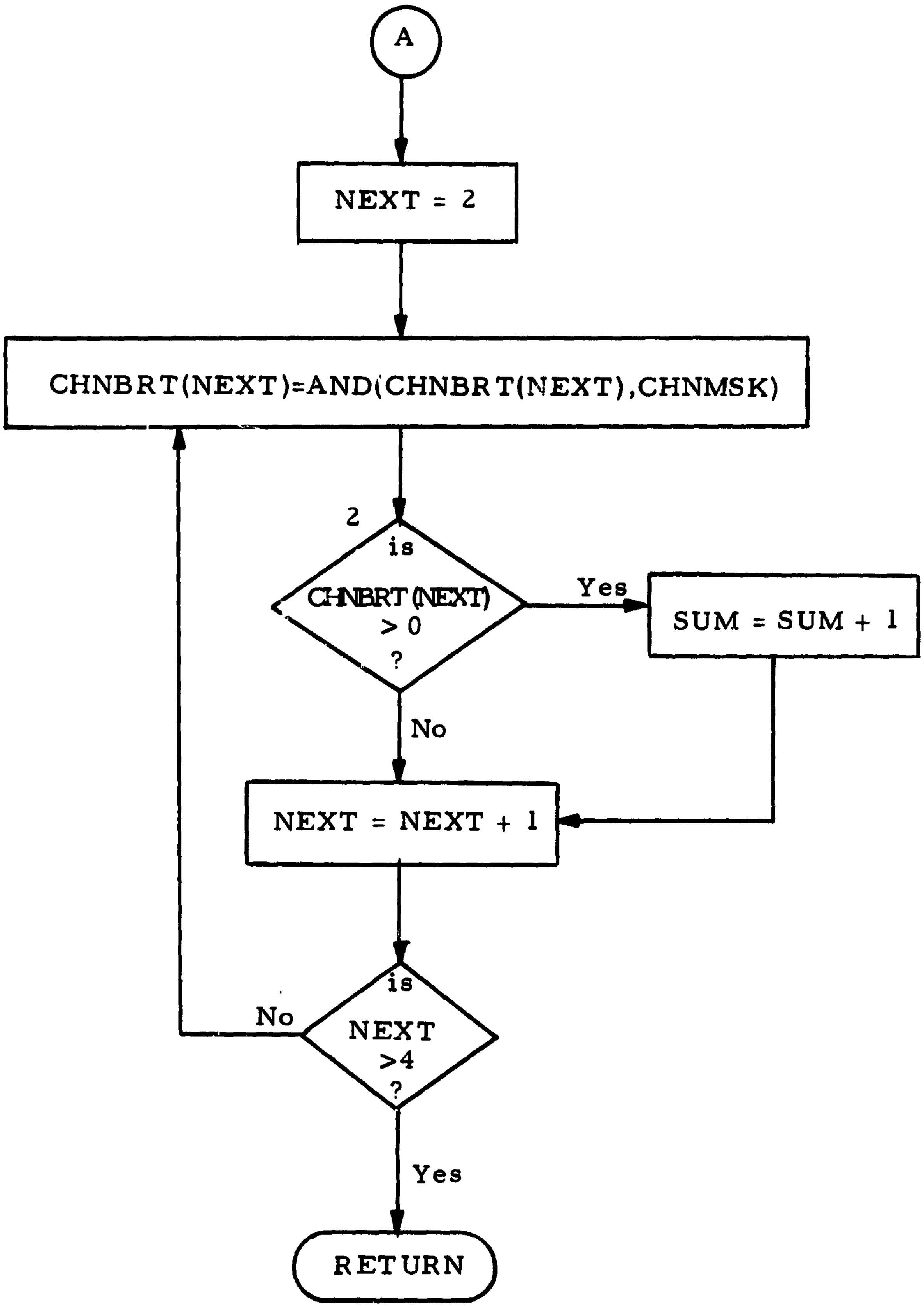
A
NEXT = 2
CHNBRT(NEXT)=AND(CHNBRT(NEXT),CHNMSK)
2
is
CHNBRT(NEXT)
> 0
?
Yes
SUM = SUM + 1
No
NEXT = NEXT + 1
is
NEXT
>4
?
No
Yes
RETURN

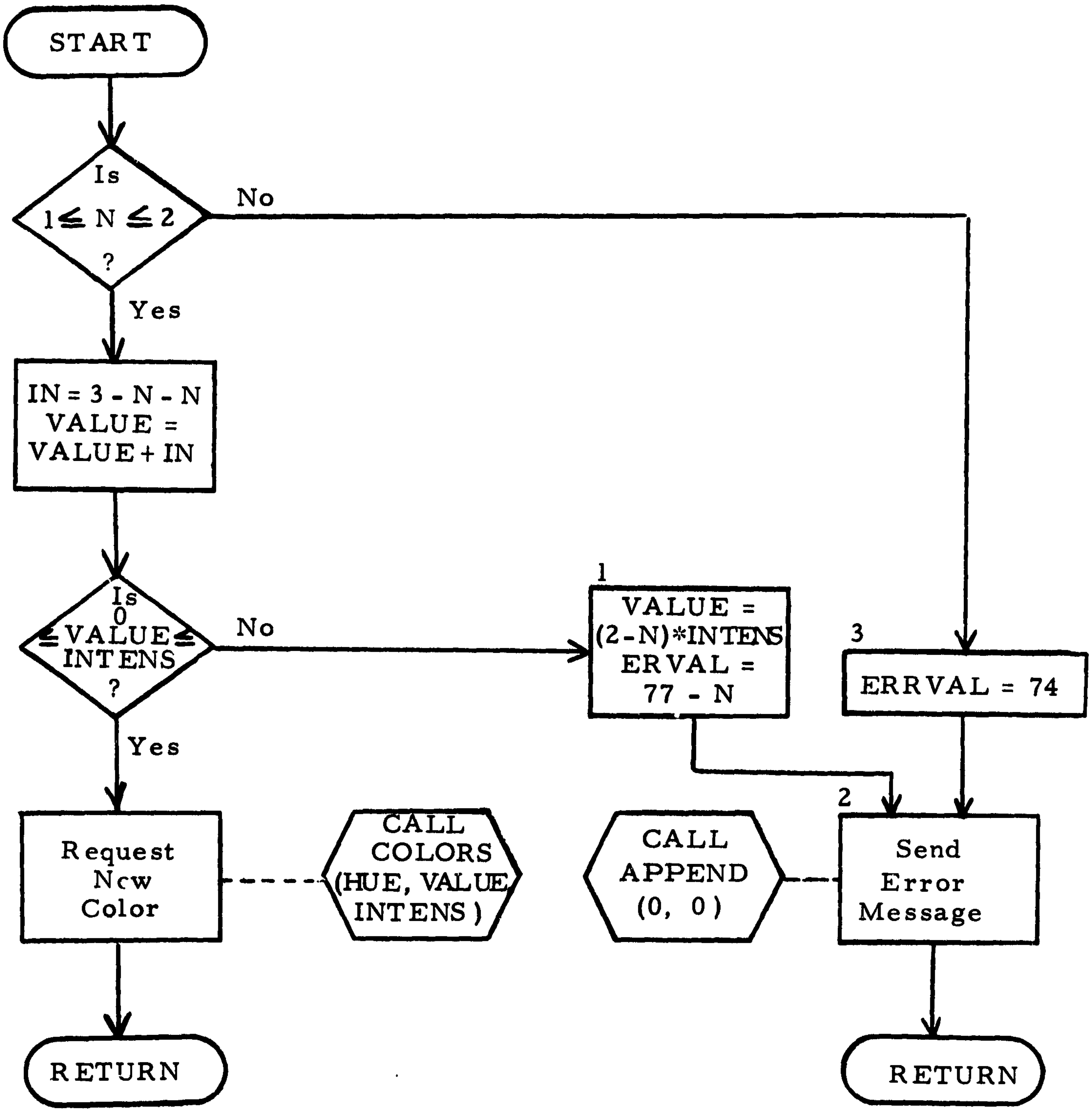
START
Is 1≤ N ≤ 2 ?
No
Yes
IN = 3 - N - N
VALUE =
VALUE + IN
Is 0 ≤ VALUE ≤ INTENS ?
No
Yes
1
VALUE =
(2-N)*INTENS
ERVAL =
77 - N
3
ERRVAL = 74
2
Request
New
Color
CALL
COLORS
(HUE, VALUE,
INTENS)
CALL
APPEND
(0, 0)
Send
Error
Message
RETURN
RETURN

CHNGIN(N)

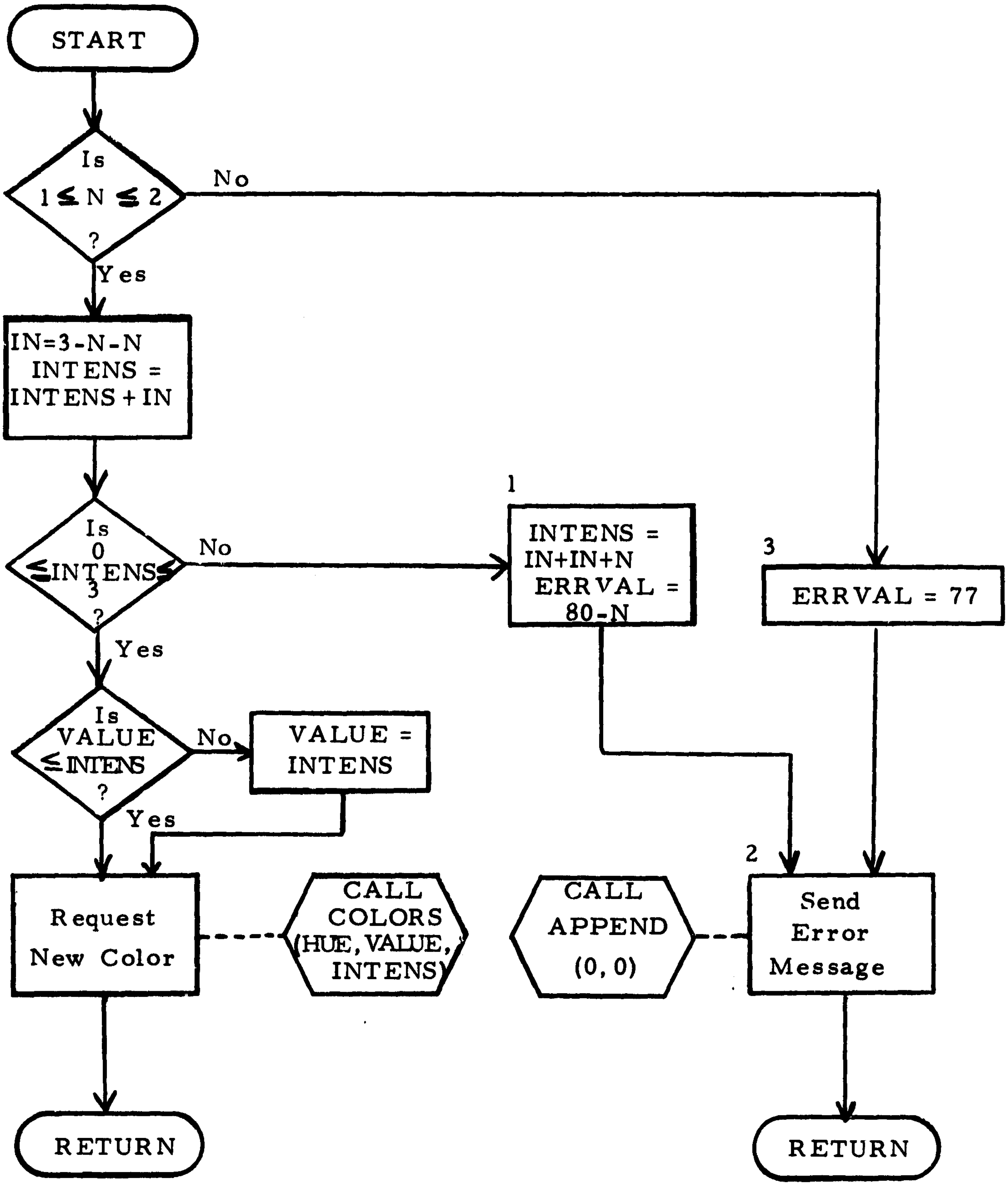
START
Is
1 ≤ N ≤ 2
?
No
Yes
IN=3-N-N
INTENS =
INTENS + IN
Is
0
≤ INTENS ≤
3
?
No
1
INTENS =
IN+IN+N
ERRVAL =
80-N
3
ERRVAL = 77
Yes
Is
VALUE
≤ INTENS
?
No
VALUE =
INTENS
Yes
2
Request
New Color
CALL
COLORS
(HUE, VALUE,
INTENS)
CALL
APPEND
(0, 0)
Send
Error
Message
RETURN
RETURN

CHNGHU(N)

chnghu 1 of 1

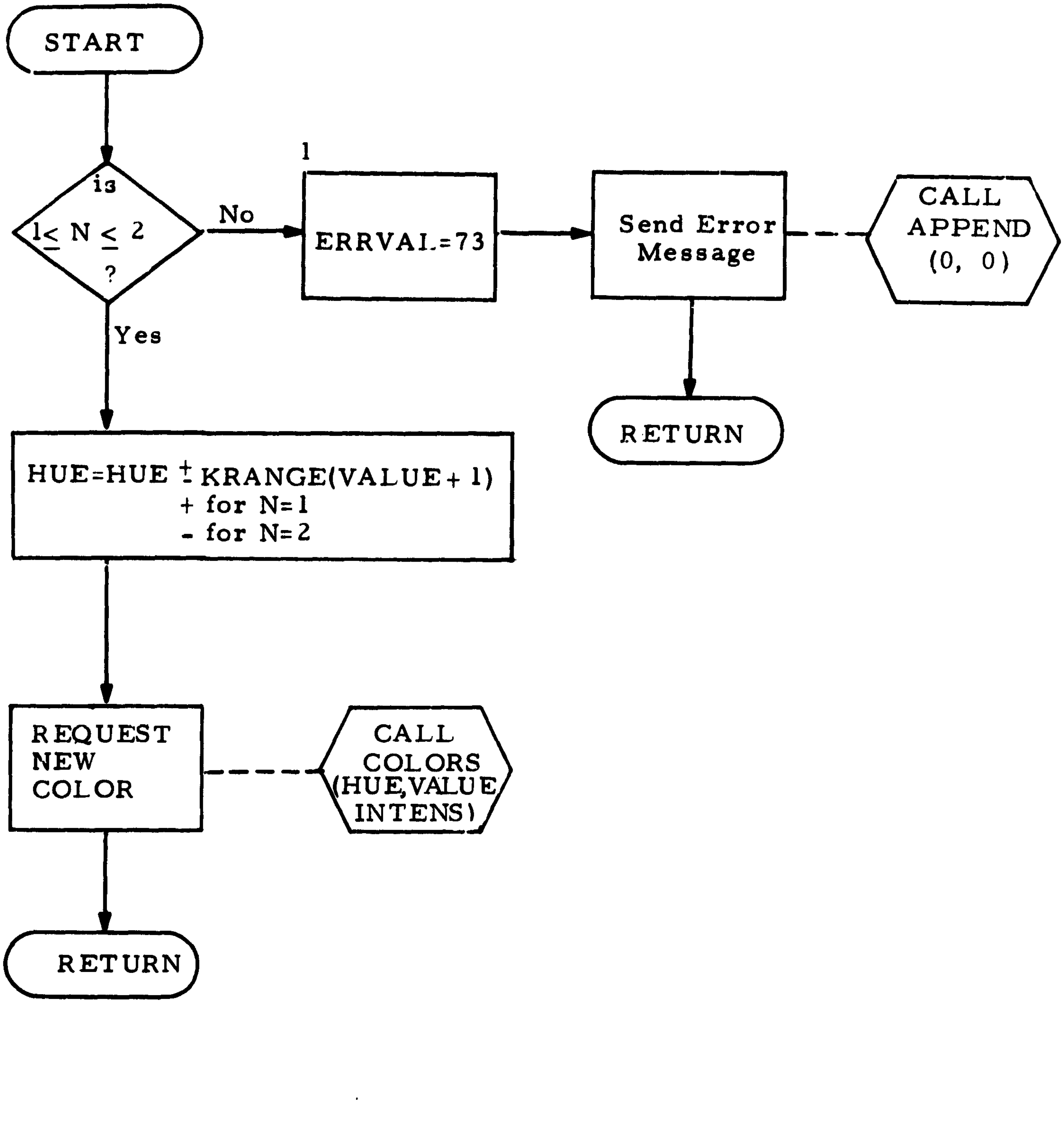

APPENDIX F. COLOR SPECIFICATION GUIDE

The NASA-ERC (code KCS) color display equipment includes a shadow-mask cathode-ray tube on which images may be formed with a precision of 1024 addressable beam positions in X, and in Y. Color in the image elements is obtained by mixing red, green, and blue phosphor activation intensities with an independent range of four levels (from "off" to full intensity) per phosphor. The UTIL-5D computer program package contains provisions for transforming hue, saturation, and richness color coordinates to the phosphor intensity commands required by the equipment. The input reference system conventions are as follows.

HUE is expressed in a three-decimal digit number as <u>any</u> angle from 000 to 359 degrees. As a guideline:

030^o = magenta,
090 = red,
150 = yellow,
210 = green,
270 = cyan,
330 = blue.

VALUE (which is saturation measured on a constant richness surface, from the gray scale at the center to a pure hue) is a one-digit number ranging from zero to three when INTENS = 3; two when INTENS = 2; etc.

INTENS (which is richness as measured along the gray scale) is one digit ranging from zero at "black" to three at white.

The computer programs permit incremental changes to a coordinate at a time. Going out of range results in an error message and automatic correction.

The sixty-four combinations of red, green, and blue intensities which may result from coordinate transformation are shown in figure F.1, arranged according to the INTENS coordinate. Figure F.2 completes the key to transformation, showing the pattern of HUE and VALUE coordinates for use with figure F.1.

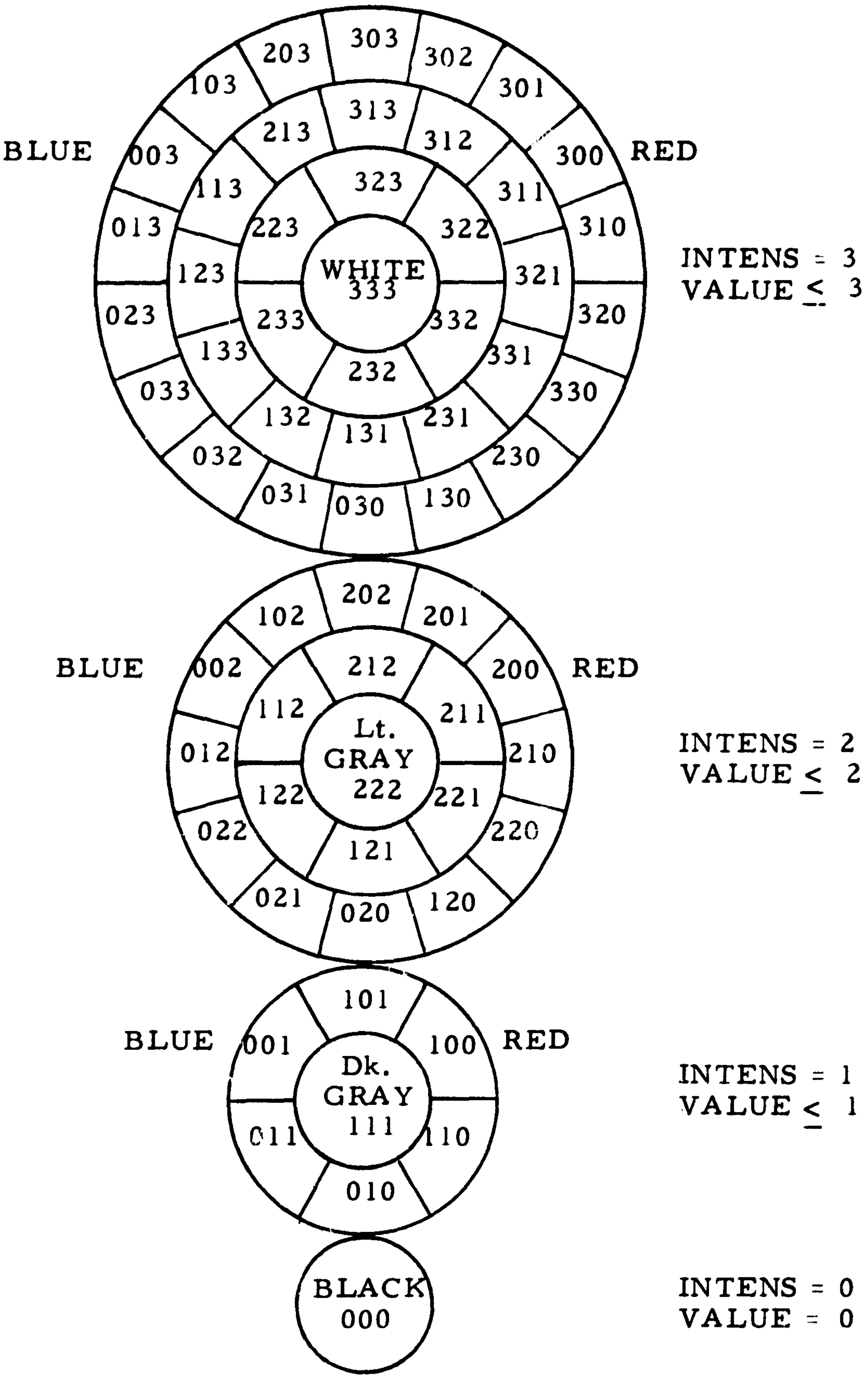

FIGURE F.1. RED, GREEN, BLUE GUN INTENSITIES

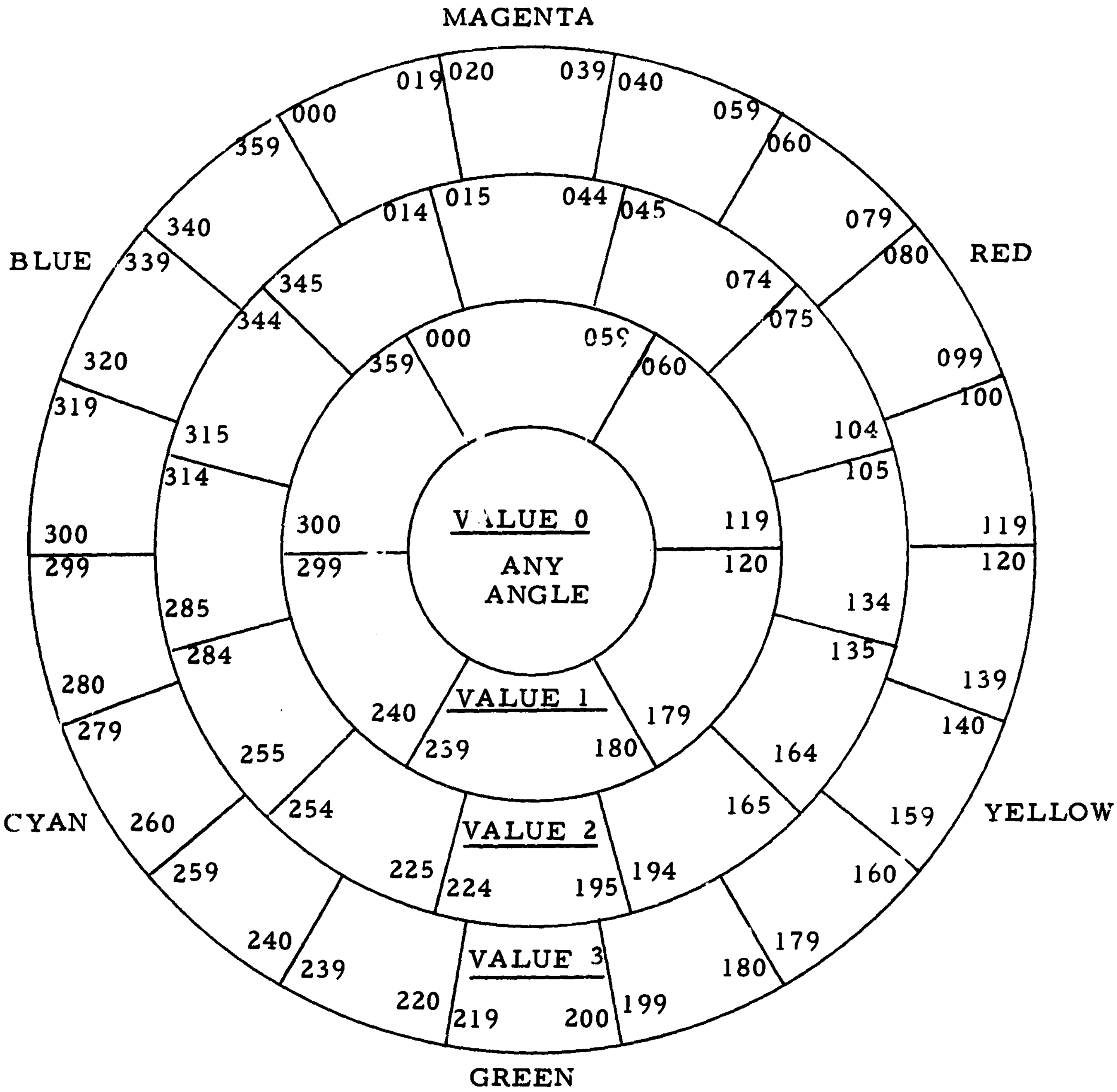

FIGURE F. 2. HUE AND VALUE COLOR WHEEL

APPENDIX G. DISPLAY TEST PATTERNS

Several test patterns may be programmed with the utility routines provided, and used for color display system evaluation and acceptance testing.

Linearity of response over the programmed gun intensity scale ("off" to "full") may be tested using the pattern shown in the frontispiece. This pattern of maximum richness surface color mixtures (c. f. Figure 5) exercises all gun intensities in various tricolor combinations. If luminosity response intervals are not approximately equal, a lack of discriminability will be apparent between some adjacent color mixtures in the pattern, with excessive discriminability between others.

A subset of these mixtures which may be used for the same purpose is shown in the lower left photograph of Figure G. 1. This rainbow pattern of vertical lines consists of the mixtures (hues) around the outer edge of the first pattern.

A rough check of balance among the three primary colors may be made with a pattern shown in the lower right photograph of Figure G. 1. The upper left photograph shows a pattern for more precise balancing: if properly adjusted the colors at each intensity level (plotted vertically) should produce white or a shade of gray that has no apparent tint.

Finally, CRT dynamic convergence and vector linearity may be tested using a pattern such as shown in the upper right of Figure G. 1. If problems exist the white grid pattern will be imperfect.

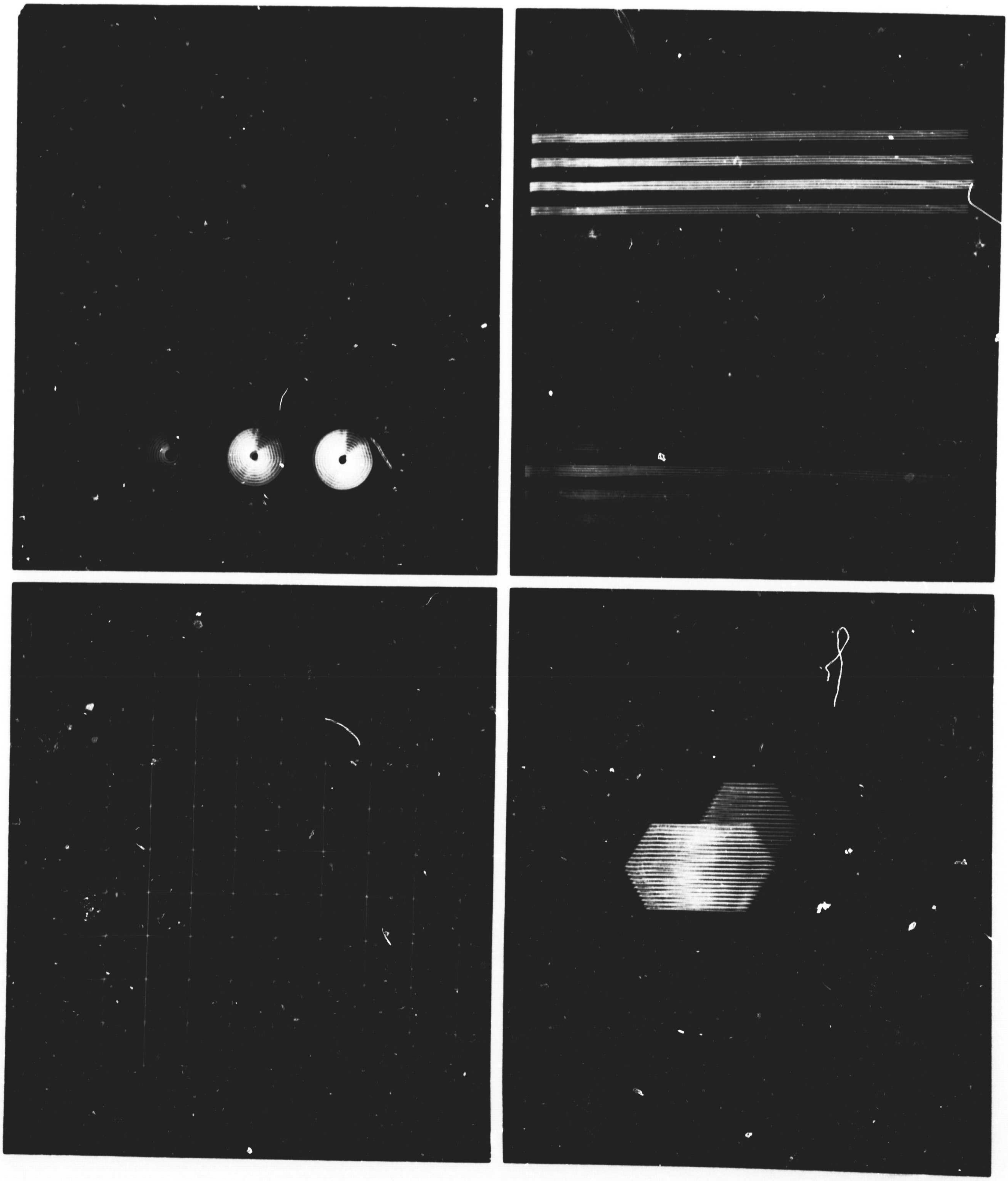

FIGURE G.1. COLOR TEST PATTERNS

APPENDIX H. NEW TECHNOLOGY

A reportable item of new technology has been developed under this contract. It consists of:

> "A Honeywell DDP-516 computer program implementing a hue - oriented, shadow-mask display-compatible color reference and coordinate transformation system."

This computer program is documented in flow-charts appearing in APPENDIX E, and in narrative form in the section of this report entitled, "COMPUTER SOFTWARE."

The color reference system is new and original, and was conceived by R. Gagan during marketing efforts associated with this contract. The system was first actually reduced to practice, under the sponsorship of this contract, in the form of a computer program. The coordinate transformation technique, also incorporated in the program, was first conceived and reduced to practice by L. Metrick while working under this contract.

After a diligent review of the work performed under this contract, no other new innovation, discovery, improvement or invention was uncovered.