SPERRY UNIVAC®

70 SERIES OPTION BOARD
OPERATION AND SERVICE MANUAL

98A 9906 054

FEBRUARY 1978

The statements in this publication are not intended to create any warranty, express or implied. Equipment specifications and performance characteristics stated herein may be changed at any time without notice. Address comments regarding this document to Sperry Univac, Mini-Computer Operations, Publications Department, 2722 Michelson Drive, P.O. Box C-19504, Irvine, California, 92713.

© 1978 SPERRY RAND CORPORATION

Sperry Univac is a division of Sperry Rand Corporation

Printed in U.S.A.

CHANGE RECORD

Page Number	Issue Date	Change Description
Various	1/78	Deleted all references to Varian.

Change Procedure:

When changes occur to this manual, updated pages are issued to replace the obsolete pages. On each updated page, a vertical line is drawn in the margin to flag each change and a letter is added to the page number. When the manual is revised and completely reprinted, the vertical line and page-number letter are removed.

LIST OF EFFECTIVE PAGES

Page Number	Change in Effect
All	Complete revision

96A0731-000B

TABLE OF CONTENTS

SECTION 1 GENERAL DESCRIPTION

1.1 FUNCTIONAL DESCRIPTION 1-1
1.1.1 Teletype Controller 1-1
1.1.2 Power Failure/Restart 1-1
1.1.3 Real-Time Clock 1-1
1.1.4 Memory Protection 1-3
1.1.5 Memory Parity 1-3
1.1.6 Priority Memory Access 1-3
1.2 SPECIFICATIONS 1-3
1.3 RELATED PUBLICATIONS 1-8

SECTION 2 INSTALLATION

2.1 INSPECTION 2-1
2.2 PHYSICAL DESCRIPTION 2-1
2.3 INTERCONNECTION 2-1

SECTION 3 OPERATION

3-1

SECTION 4 THEORY OF OPERATION

4.1 TELETYPE CONTROLLER 4-1
4.1.1 Signal Interfaces 4-1
4.1.1.1 Teletype Interface 4-3
4.1.1.2 PIM Interface 4-6
4.1.2 Circuit Description 4-6
4.1.2.1 Initial Condition 4-6
4.1.2.2 TC/Common-Logic Interface 4-7
4.1.2.3 TC Output (Write) 4-8
4.1.2.4 Loading the Output Buffer and MOS Transmitter 4-10
4.1.2.5 Output to the TTY 4-10
4.1.2.6 TC Input (Read) 4-10
4.1.3 Programming 4-11
4.2 POWER FAILURE/RESTART 4-13
4.2.1 Timing 4-14
4.2.2 Circuit Description 4-14
4.2.3 Programming 4-17
4.3 REAL-TIME CLOCK 4-18
4.3.1 Timing 4-20
4.3.2 Circuit Description 4-20
4.3.2.1 Instruction Decoder and Control Logic 4-21
4.3.2.2 Free-Running Counter 4-22
4.3.2.3 Clock Control Logic 4-22
4.3.2.4 Input Timing Source 4-22
4.3.2.5 Variable Interval Logic 4-22
4.3.2.6 Memory Overflow Detection Logic 4-25
4.3.2.7 Interrupt Control Logic 4-25
4.3.3 Programming 4-25
4.4 MEMORY PROTECTION 4-27
4.4.1 Error Sequences 4-31

4.4.2 Circuit Description 4-33
4.4.3 Programming 4-34
4.5 MEMORY PARITY 4-35
4.5.1 Circuit Description 4-35
4.5.2 Programming 4-36
4.6 PRIORITY MEMORY ACCESS 4-36
4.6.1 PMA Option/Controller Interface 4-37
4.6.2 Timing 4-37
4.6.3 Circuit Description 4-43
4.6.4 Programming 4-45

SECTION 5 MAINTENANCE

5.1 TELETYPE CONTROLLER 5-1
5.1.1 Equipment 5-1
5.1.2 Test Programs 5-1
5.1.3 TC/TTY Troubleshooting 5-1
5.2 POWER FAILURE/RESTART 5-2
5.2.1 Equipment 5-2
5.2.2 Test Program 5-2
5.2.3 Troubleshooting 5-2
5.3 REAL-TIME CLOCK 5-3
5.3.1 Equipment 5-3
5.3.2 Test Program 5-3
5.3.3 Troubleshooting 5-3
5.4 MEMORY PROTECTION 5-3
5.4.1 Equipment 5-3
5.4.2 Test Program 5-3
5.4.3 Troubleshooting 5-3
5.5 PARITY 5-5
5.6 PRIORITY MEMORY ACCESS 5-5
5.6.1 Equipment 5-6
5.6.2 Troubleshooting 5-6

SECTION 6 MNEMONICS

6.1 TELETYPE CONTROLLER 6-1
6.2 POWER FAILURE/RESTART 6-2
6.3 REAL-TIME CLOCK 6-2
6.4 MEMORY PROTECTION 6-4
6.5 MEMORY PARITY 6-4
6.6 PRIORITY MEMORY ACCESS 6-5

LIST OF ILLUSTRATIONS

Figure 1-1. Option Board Block Diagram 1-2
Figure 1-2. PMA Interfacing 1-4
Figure 1-3. Memory Access 1-5
Figure 2-1. The Option Board Installed 2-1
Figure 4-1. Common-Logic Timing for Data-Transfer-In 4-1
Figure 4-2. TC Block Diagram 4-2
Figure 4-3. TC Clock Jumpers for Various Transfer Rates 4-3

Figure 4-4. Optical Coupler Isolation for TC/TTY Interface 4-5
Figure 4-5. Typical TTY Character 4-5
Figure 4-6. Input Character Sampling 4-6
Figure 4-7. Maladjusted Input Clock 4-6
Figure 4-8. TC Software Initialization Timing 4-7
Figure 4-9. Processor-to-TC Output Timing 4-8
Figure 4-10. TC Data-Transfer-Out Timing 4-9
Figure 4-11. Input Timing TTY to TC 4-10
Figure 4-12. TC Data-Transfer-In Timing 4-10
Figure 4-13. PF/R Functional Block Diagram 4-13
Figure 4-14. Power-Up Timing at the Power Supply-PF/R Interface 4-14
Figure 4-15. Power-Up Timing at the PF/R-Processor Interface 4-14
Figure 4-16. Power-Down Timing at the Power Supply-PF/R Interface 4-15
Figure 4-17. Power-Down Timing at the PF/R-Processor Interface 4-15
Figure 4-18. Control Logic Sequence 4-16
Figure 4-19. Typical PF/R Service Routine 4-18
Figure 4-20. RTC Block Diagram 4-19
Figure 4-21. Timing Source Selection 4-19
Figure 4-22. Variable Interval Counter and Load Buffer Timing 4-23
Figure 4-23. Variable-Interval Interrupt Timing 4-24
Figure 4-24. Typical RTC Service Routine 4-27
Figure 4-25. MP Block Diagram 4-28
Figure 4-26. Mask Register Bit Assignment 4-29
Figure 4-27. Memory Assignment Example 4-30
Figure 4-28. Parity Option 4-36
Figure 4-29. Typical PMA Control-Line-Out 4-38
Figure 4-30. Typical PMA Bidirectional-Bus Line 4-39
Figure 4-31. Typical Address-or Control-Line-In 4-40
Figure 4-32. PMA Output (Reading) 4-41
Figure 4-33. PMA Input (Writing) 4-42
Figure 4-34. PMA Option Block Diagram 4-44
Figure 5-1. Basic Input/Output Test Program 5-1

LIST OF TABLES

Table 1-1. Option Board Configurations 1-1
Table 1-2. Option Board Specifications 1-5
Table 1-3. TC Specifications 1-6
Table 1-4. PF/R Specifications 1-6
Table 1-5. RTC Specifications 1-7
Table 1-6. MP Specifications 1-7
Table 1-7. PARITY Specifications 1-7
Table 1-8. PMA Specfications 1-8
Table 4-1. TC and TTY Instructions 4-11
Table 4-2. ASCII TTY Codes 4-12
Table 4-3. Major RTC Functions 4-20
Table 4-4. RTC Instructions 4-25
Table 4-5. MP Error Conditions Possible During Single-Word Instructions in Unprotected Area 4-32
Table 4-6. MP Error Conditions Possible During Double-Word Instructions in Unprotected Area 4-32
Table 4-7. Interrupt Addresses for MP Errors 4-35
Table 4-8. MP I/O Instructions 4-35
Table 5-1. Parity Check Pattern 5-5

SECTION 1

GENERAL DESCRIPTION

This manual contains the specifications, installation information, mnemonics lists, maintenance data, and theory of operation for the option board. Depending on the system configuration, the option board contains some or all of the following features:

- Common logic
- I/O Control logic
- Teletype controller (TC)
- Keyboard/display terminal controller
- Power failure/restart (PF/R)
- Real-time clock (RTC)
- Memory protection (MP)
- Memory parity logic
- Priority memory access (PMA) (see note)

Note: PMA cannot be added in the field.

1.1 FUNCTIONAL DESCRIPTION

The V70 Series option board contains mainframe features for the SPERRY UNIVAC V70 Series Computer Systems. Table 1-1 lists the nine available option board configurations together with current requirements for each +5V dc operating voltage. The current requirements for the -12V dc and +24V dc operating voltages are listed in table 1-2 and are the same for all configurations.

Figure 1-1 is a block diagram of the option board and its interfaces. Communication between the option board and the processor board is through the common logic. Buffer repowering in the common logic reduces the load on the processor I/O bus and also reduces the numbers of integrated circuits (IC) required for the options. The processor I/O control section, which is located on the option board, is discussed in the V70 Series Processor Manual.

1.1.1 Teletype Controller

The **Teletype controller (TC)** is a control and interface device for data transfers between the processor board and a Model 33 or 35 Teletype. Data is transferred between the processor board and the TC in 8-bit bytes over the I/O bus under either interrupt or sense control. Data is transferred between the TC and the Teletype over a serial, asynchronous, full duplex interface.

Note: The keyboard/display terminal (CRT) uses the same controller (with minor modification) as the Teletype. Throughout this manual, all references to Teletype (TTY) also pertain to CRT.

Table 1-1. Option Board Configurations

	Configurations	Current
1	I/O control logic	2.5 amps
2	Common logic, I/O control logic, Memory parity logic*	3.3 amps
3	Common logic, I/O control logic, RTC, TC/CRT, PF/R	5.5 amps
4	Common logic, I/O control logic, Memory parity logic*, RTC, TC/CRT, PF/R	5.9 amps
5	Common logic, I/O control logic, Memory parity logic*, RTC, TC/CRT, PF/R, MP	7.9 amps
6	Common logic, I/O control logic, Memory parity logic*, RTC, CRT (only), PF/R, MP	7.9 amps
7	Common logic, I/O control logic, Memory parity logic*, RTC, TC/CRT, PF/R, PMA	10.0 amps
8	Common logic, I/O control logic, Memory parity logic*, RTC, TC/CRT, PF/R, MP, PMA	12.0 amps
9	Common logic, I/O control logic, Memory parity logic*, RTC, CRT (only), PF/R, MP, PMA	12.0 amps

*The memory parity logic is functional only when the entire system memory is comprised of optional parity core and/or parity semiconductor memory modules (18 bit).

1.1.2 Power Failure/Restart

The **power failure/restart (PF/R)** protects, during loss or reduction of ac prime power, the program in progress and the contents of computer memory and registers. Upon restoration of power, the PF/R automatically restarts the computer and causes it to reenter the interrupted program at the point of interruption.

Power reduction, failure, or turn-off initiates a power-down cycle during which the PF/R completes execution of the current instruction and then interrupts the processor, directing it to the address of the SAVE subroutine. This service subroutine loads the contents of the volatile registers (A, B, X, P, and overflow) into preselected addresses in memory. After the execution of SAVE, the PF/R disables the processor and memory until power is restored.

When power is restored so that all power-up conditions are satisfied, the PF/R enables the processor and memory, initiates the system-start signal, and directs the processor to the address of the RESTORE subroutine. This service subroutine reloads the registers with the saved data, and contains a jump instruction that directs the processor to reenter the program at the point of interruption and continue execution.

1.1.3 Real-Time Clock

The **real-time clock (RTC)** provides the following real-time functions:

- Variable-interval interrupt
- Memory-overflow interrupt
- Readable free-running counter

The *variable-interval interrupt* has three preselectable hardware timing sources: (1) a 10 kHz signal (standard unless otherwise specified), (2) line frequency from the power supply, or (3) a user-supplied external source. The software-selectable interval can be anywhere in the range one to 4,095.

The *memory-overflow interrupt*, which operates in conjunction with the Variable-Interval Interrupt (VII), is implemented by loading an increment-memory-and-replace instruction into the VII address. This is monitored by the overflow-detection logic, which triggers the memory-overflow interrupt when the contents of the variable-interval-interrupt are incremented to 040001.

The 16-bit *readable free-running counter* is continually updated and read under program control. Counter timing is based on the 10kHz-clock, the variable-interval interrupt rate, the line frequency, or a user-supplied external source.

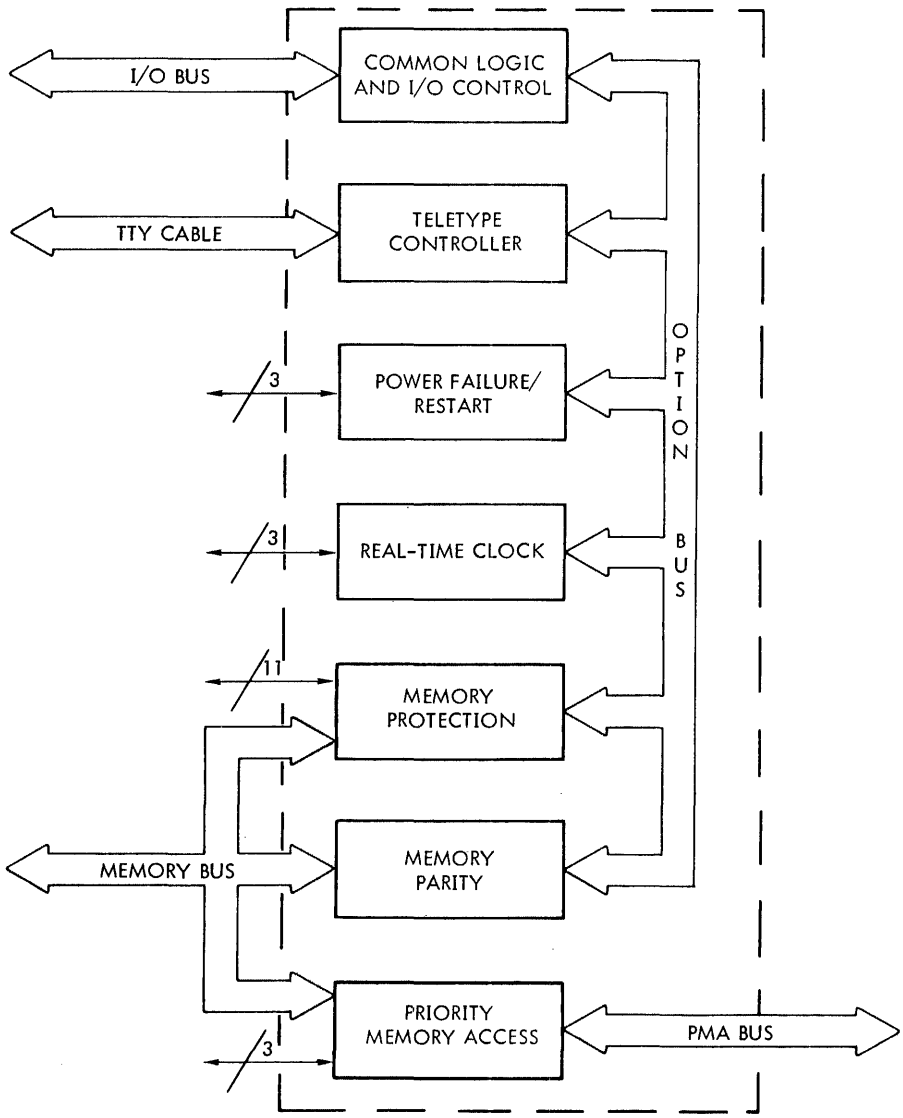

VTII-1560A

Figure 1-1. Option Board Block Diagram

1.1.4 Memory Protection

Memory protection (MP) prevents unauthorized or unintentional program access to, or modification of, protected areas of memory.

Memory is divided into 512-word segments, each of which can be either protected or unprotected. Segments not designated as protected are, by definition, unprotected. The protected/unprotected status of each segment is stored in the MP in four 16-bit mask registers that are loaded by I/O instructions from the processor. These mask registers can store the status of up to 64 memory segments.

The MP monitors the address of the instruction being processed, the address specified by the next instruction in sequence, and the address specified by the effective address. Using this information and the status of the stored segment, the MP determines and operates on errors.

When a program is executed in unprotected memory, any of the following operations constitutes an error:

- Overflowing into a protected segment
- Writing into a protected segment
- Jumping into a protected segment
- Executing an I/O instruction in an unprotected segment
- Executing a halt instruction in an unprotected segment

When the MP detects an error, execution of the current instruction is completed. However, if the instruction specifies writing or I/O operations, the contents of the A, B, and X registers and memory are not modified. Processor program processing is then interrupted and directed to one of five preassigned memory addresses. From this address, the program is directed to a user-written service subroutine for error analysis and correction.

NOTE: By definition, an error cannot exist during the execution of a protected instruction even when it indirectly references an unprotected address.

When the memory map option is installed, memory protection is disabled.

1.1.5 Memory Parity Logic

The **memory parity logic** generates and checks parity for all memory access. The parity check/generator generates parity on memory writing operations, and checks it on reading operations. The parity control generates an interrupt request when a parity error is detected. The parity logic is functional only when the entire system memory is comprised of optional parity core memory and/or parity semiconductor memory modules (18 bit).

1.1.6 Priority Memory Access

The **priority memory access (PMA)** is the interface (figure 1-2) between memory and the four data-transfer channels. The channels have hardware-fixed priorities. All signals transmitted on these channels are controlled by an interlock scheme that makes the interface independent of circuit and cable speed. This permits processing of data using a wide variety of transfer rates and circuit speeds.

The PMA continuously scans the four channels and generates acknowledgments as required. The order of priority for memory access on the B port is:

- PMA
- Direct memory access (DMA)
- 620 compatible direct memory access
- Processor

In dual port systems in which the processor is configured on port A, requests to separate memory modules will cause both requests to be serviced at the same time (figure 1-3).

After receiving an acknowledgment, the PMA controller clears the request unless consecutive memory cycles are required, in which case the line remains set. The controller then enables the 20-bit address bus, gates the data onto the 16/18-bit bidirectional bus, and, if a reading operation was requested, enables the read line. When the buses are stable, the data transfer begins. When the PMA detects the memory-data-ready signal from memory, it gates the data to the PMA bus and clears the acknowledgment. For reading operations, the controller uses the trailing edge of the acknowledgment signal to clock the data.

Up to eight controllers can share the PMA option. Where several controllers are connected to a given channel, only one can be active at a time.

The memory access logic scans the PMA and DMA request lines at the main system clock rate. If the lines are not enabled, the processor controls all memory cycles. If the PMA, DMA, or 620 compatible DMA request lines are enabled, the processor is locked out of memory after a request is recognized, and no other unit has access to memory as long as a PMA request is enabled. PMA requests thus take priority over those from the DMA. PMA requests are, however, ignored in case of power failure.

1.2 SPECIFICATIONS

Tables 1-2 through 1-8 contain the physical, electrical, and operational specifications for the option board and each of the options.

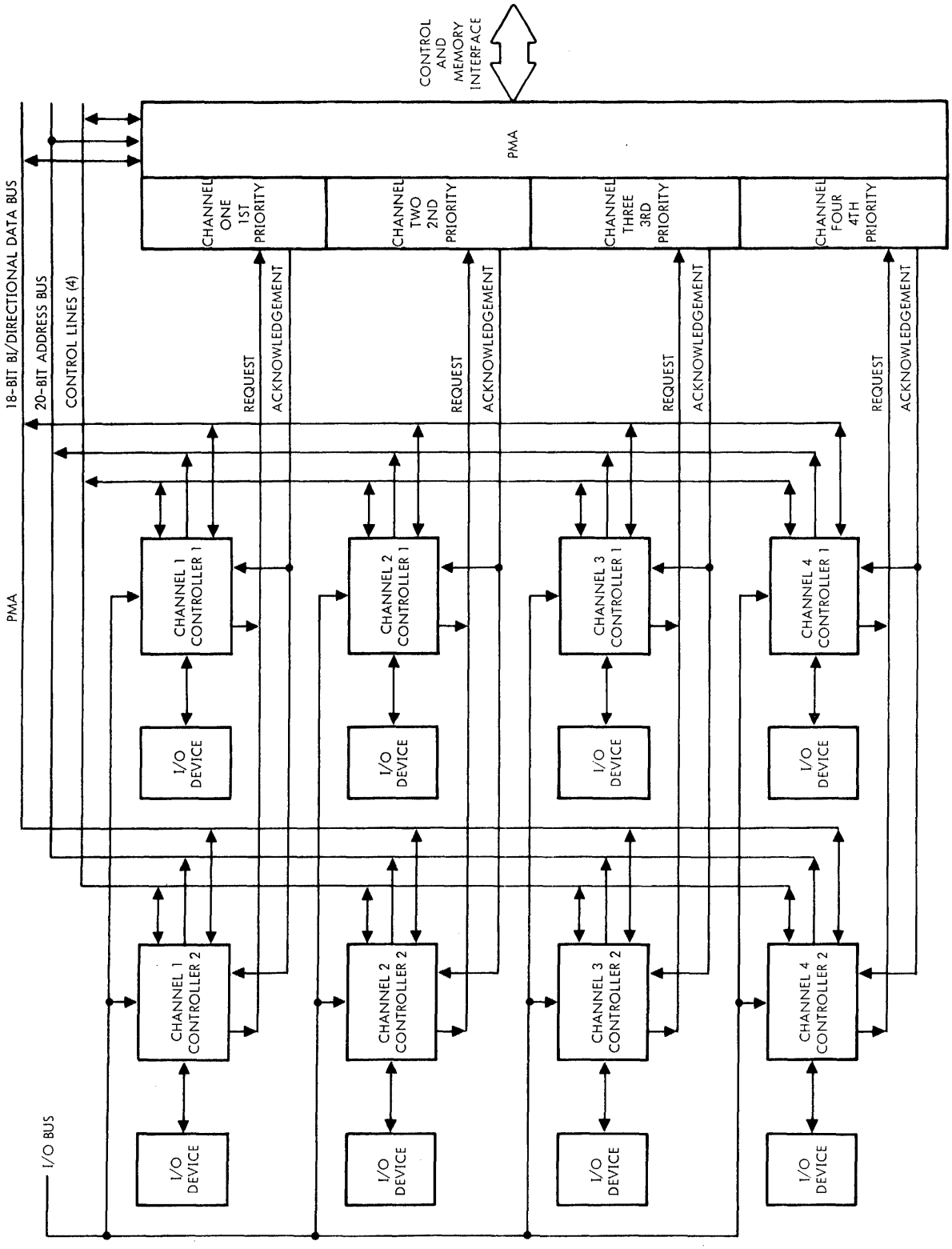

VTII-1561

Figure 1-2. PMA Interfacing

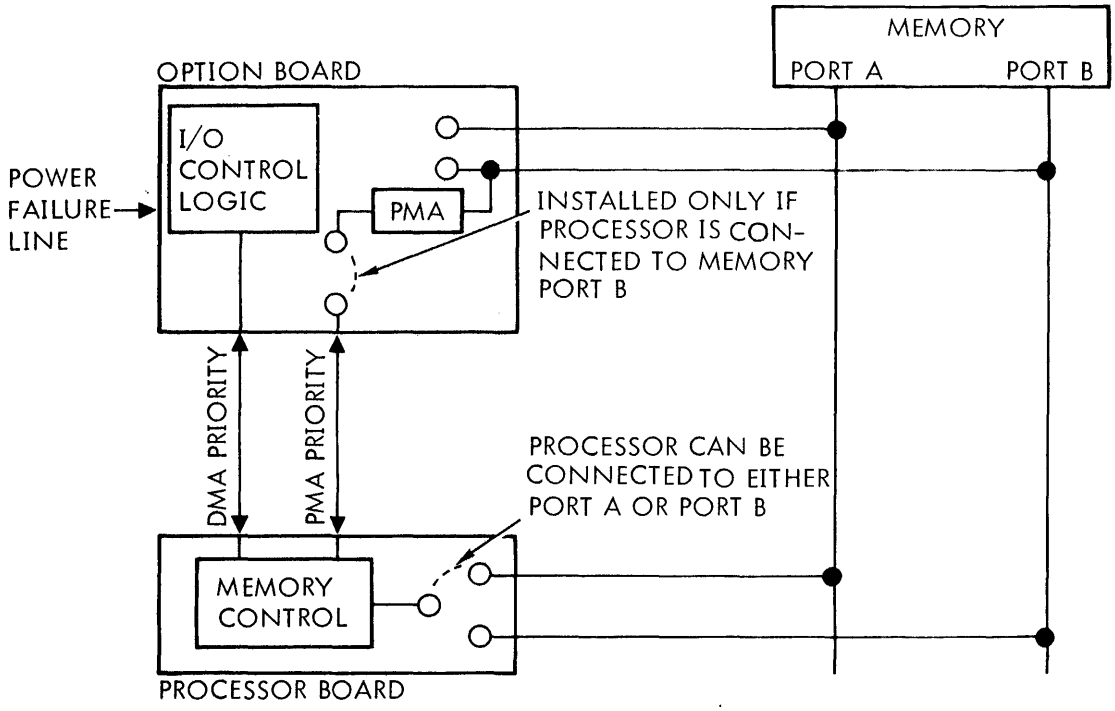

Note: The processor, parity, and PMA are all connected to port B on a V72 system.

VTII-1562A

Figure 1-3. Memory Access

Table 1-2. Option Board Specifications

Parameter	Description
Organization	Contains circuits for the common logic, I/O control logic, TC, PF/R, RTC, MP, memory parity logic, and PMA on a 15.6-by-19-inch (39.6-by-48.3-cm) circuit board
Logic Levels	High: +2.4 to +5.5V dc Low: 0.0 to +0.5V dc
Interconnection	Plugs into the backplane of the computer mainframe, interface signals are routed via card-edge connectors, PMA bus and TC signals pass through separate connectors at the rear of the board
Power requirements	−12V dc at 10 milliamperes 24V ac at 10 milliamperes +5V dc at 12 amperes (maximum)
Operational Environment	0 to 50 degrees C; 0 to 90 percent relative humidity without condensation

Table 1-3. TC Specifications

Parameter	Description
Organization	Contains input and output registers, timing control circuitry for simultaneous two-way transmission, and processor/TTY interface logic
Peripheral Device	Sperry Univac modified Model 33 ASR 35 ASR, or 35 KSR Teletype unit
Transmission Speed	Controlled by TTY: ten characters per second (100 milliseconds per character) at either random or sustained rate
Modes of Operation	Input: from TTY keyboard or paper-tape reader Output: to TTY printer or paper-tape punch
Device Address	001
Memory Access	Controlled by the processor
Interrupts	Write ready and read ready available to PIM

Table 1-4. PF/R Specifications

Parameter	Description
Organization	Contains sequencer logic, power-up/power-down logic, start-processor logic, and interrupt logic
Priority Assignment	Second only to MP on I/O bus
Interrupt Addresses	Power-down SAVE subroutine at 040 and 041; power-up RESTORE subroutine at 042 and 043
Service Subroutines	When power fails, SAVE stores volatile register contents, then halts the processor When power is restored, RESTORE reloads volatile registers, then enables program resumption

Table 1-5. RTC Specifications

Parameter	Description
Modes of Operation	Variable-interval interrupt, memory overflow interrupt, interval accumulation, time-of-day accumulation, and event accumulation
FRC Capability	Counts up to 0177777 with three hardware-selectable timing sources
I/O Capability	Seven external control and two data transfer instructions
Timing Sources	10 kHz ± 1 percent, squarewave; variable-interval interrupt range: 100 microseconds to 409.5 milliseconds (in 100-microsecond increments) Line frequency, derived from 24V rms sinewave; variable-interval interrupt range (nominal): 16.7 milliseconds to 68.3 seconds (in 16.7-millisecond increments) at 60 Hz, and 20.0 milliseconds to 81.9 seconds (in 20.0-millisecond increments) at 50 Hz External timing (user-supplied): minimum positive duration, 5.0 microseconds; minimum negative duration, 5.0 microseconds
Interrupt Priority	Determined by position on the priority chain

Table 1-6. MP Specifications

Parameter	Description
Protection capacity	Up to 64 segments (512-word) of memory
Modes of Operation	Detects halt, overflow, I/O, writing, and jump errors
Interrupt Priority	Highest on the I/O bus priority chain
I/O Capability	Six external-control and eight data-transfer

Table 1-7. PARITY Specifications

Parameter	Description
Mode of Operation	Interrupt logic issues interrupt request upon detection of a parity error
Interrupt Priority	Follows PF/R and MP on the I/O bus
I/O	I/O interface via the interval I/O bus logic
Bus	Generates and checks parity on either the A or B bus, but not both. The hardware-selectable bus is the same as that used by the processor.

Table 1-8. PMA Specifications

Parameter	Description
Number of Channels	Four, with hardware-assigned priority
Maximum Number of Controllers per PMA	Eight, variously distributed among the four channels (only one active controller per channel at a given time)
Maximum Cable Length	20 feet (6 meters)
Latency (Typical for 10-foot cable assuming 60 nanosecond user controller delay)	530 nanoseconds (min) 1190 nanoseconds (max)
Maximum transfer rate (Typical for 10-foot cable assuming 60 nano-second user-controller delay)	Semiconductor memory 1.10 MHz (write) 1.01 MHz (read) Core memory 1.01 MHz (write) 0.93 MHz (read)
Control Signals	Interlocked responses to all signals allow true asynchronous operation
Priority	Second only to PF/R

1.3 RELATED DOCUMENTATION

Documents such as logic diagrams, schematics and parts lists are supplied in a system documentation package. This manual is assembled when the equipment is shipped, and reflects the configuration of a specific system.

The following list contains the part numbers of other manuals pertinent to the V70 series computers (the x at the end of each document number is the revision number and can be any digit 0 through 9):

Title	Manual Number
V70 Architecture Reference Manual	98A 9906 00x
V70 Processor Manual	98A 9906 02x
V70 Semiconductor Memory Manual	98A 9906 04x
V76 System Reference Manual	98A 9906 23x
V77-600 System Reference Manual	98A 9906 40x
MAINTAIN III Manual	98A 9952 07x

SECTION 2
INSTALLATION

This section describes the steps to be taken during the unpacking and installation of the option board, gives a physical description of the board, and lists the pin assignments.

2.1 INSPECTION

The option board has been inspected and packed to ensure its arrival in good working order. To prevent damaging the board, take reasonable care during unpacking and handling. Check the shipping list to ensure that all equipment has been received. Immediately after unpacking, inspect the equipment for shipping damage. If any is found:

- Notify the transportation company
- Notify Sperry Univac
- Save all packing material

2.2 PHYSICAL DESCRIPTION

The option board is a 15.6-by-19-inch (39.6-by-48.3-cm) printed circuit (PC) board that mounts in any mainframe chassis slot (figure 2-1).

The integrated circuits (ICs) on the option board are dual-in-line, plastic-encased chips. Under certain circumstances, some ceramic ICs are used.

2.3 INTERCONNECTION

The option board interfaces with other system components through card-edge connectors plus connectors mounted at the rear of the board. These connectors carry all signals indicated by the block diagram (figure 1-1) as interfacing with the rest of the system. TC and PMA-bus signals pass through the connectors at the rear of the board to special cables leading to the Teletype and PMA controller (respectively). The memory bus provides the interface between memory and the option board (MP, PARITY, and PMA). Except for the PMA, which does not use the I/O bus, all I/O signals between the CPU and the option board are repowered in the option board common logic and distributed via the option bus within the board.

Option-board pin assignments are listed as part of the logic diagram (91B0401) in the system documentation package. The signal mnemonics are defined in section 6.

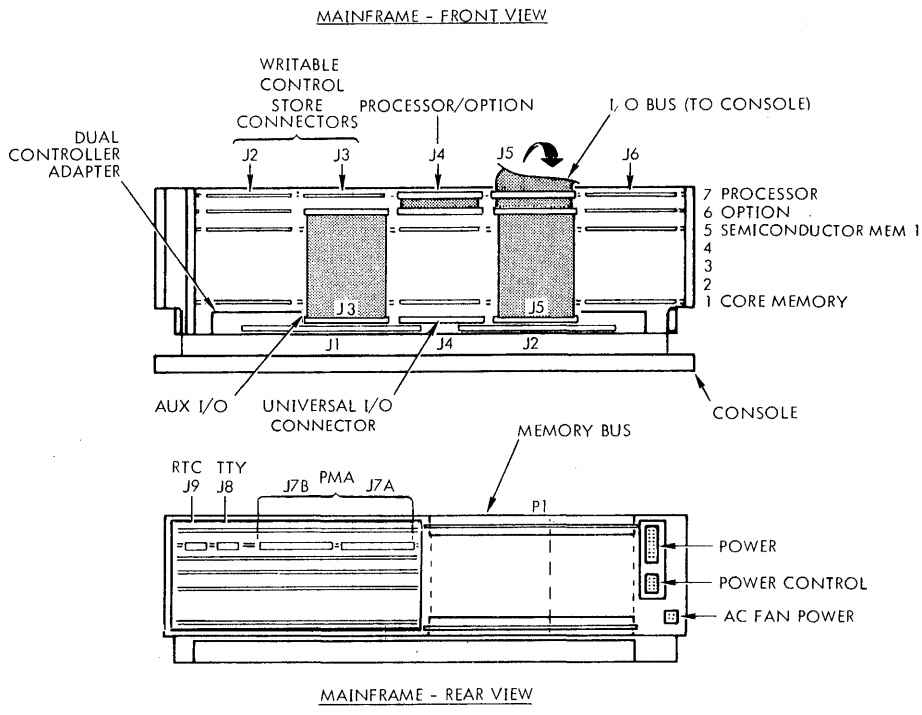

VTII-2083A

Figure 2-1. Typical Option Board Installation

SECTION 3
OPERATION

The option board has no operating controls or indicators. Computer operations that affect the option board are explained in the V70 Series Processor Manual.

SECTION 4
THEORY OF OPERATION

Option-board logic (logic diagram 91B0401) may consist of one or more of the circuit blocks shown in the option board block diagram (figure 1-1). Signal mnemonics for the option board are defined in section 6. As shown in figure 1-1, all option board features (except PMA) are interconnected by the option bus. This bus is the interface between the individual sections and the option board common logic. The common logic in turn is the interface between the option board and the bidirectional I/O bus which carries data and control signals to and from the rest of the system.

The PMA has its own PMA bus. The three options that deal directly with memory (MP, PARITY, and PMA) are also connected to the memory bus.

The common logic circuits consist of buffered system control lines (IUJX– I to OIUJX +, DRYX– I to ODRYX +, FRYX– I to OFRYX +, SYRT– I to OSYRT +, IUAX– I to OIUAX +, IUCX– I to OIUCX +, and OIURX– via OIURX + to IURX– I) and a set of mutually exclusive drivers and gates that either transfer data from the option bus (OB00– through OB15–) to the bidirectional I/O bus (EB00– I through EB15– I) or vice versa. Thus, for a data-transfer-in (timing figure 4-1), receivers are disabled by OBOUTA– and OBOUTB– while the drivers are enabled by OBOUT + and OBOUTB +. On data-transfer-out, the reverse is true. LK82 + creates the 12.1212 MHz internal option-board clock.

4.1 TELETYPE CONTROLLER

The **Teletype controller (TC)** (figure 4–2) consists of the following functional blocks: instruction decoding and control logic, MOS transmitter/receiver, TC clock, data-transfer-out buffer register, and the TTY interface logic.

The *instruction decoding and control logic* responds to processor data-transmission requests and supplies interrupt signals for priority interrupt module (PIM) control. The TC decodes the device address (01) from the low-order six bits of the option bus (OB00— through OB05—) producing TDA + after ANDing with not interrupt acknowledge (OIAUX—). If an address is on the option bus, it is recognized when OIUAX + is false. The I/O-TC interface provides for TC initialization and storage for processor-TC data transfers in a two-word format. The control logic generates signals to control other TC logic blocks, including the MOS transmitter-receiver. It also provides logic for external control instructions and initialization.

The *MOS transmitter/receiver* is a single 40-pin chip. It monitors all data transfers between the TC and the TTY, including parallel-to-serial data conversion and transmission to the TTY, serial-to-parallel data conversion for transfer from the TTY to the processor, and data flags to the instruction decoding and control logic.

The *TC clock* supplies timing signals to the MOS transmitter/receiver and the control logic by counting-down a 24.2424 MHz signal from the processor internal crystal-controlled oscillator. The counter can be programmed using jumpers to vary the transfer rate (figure 4-3).

The *data-transfer-out buffer register* provides the necessary buffering for data transmission.

The *TTY interface logic* provides a three-line interface from the TC to the TTY. The interface lines are isolated from the TC by optical couplers to control possible high voltages in the TTY interface (up to 140V ac during power surges).

4.1.1 Signal Interfaces

The TC interfaces with the basic computer and a factory-modified TTY. No other options are required; however, the TC can interface with a PIM to provide character-ready interrupts.

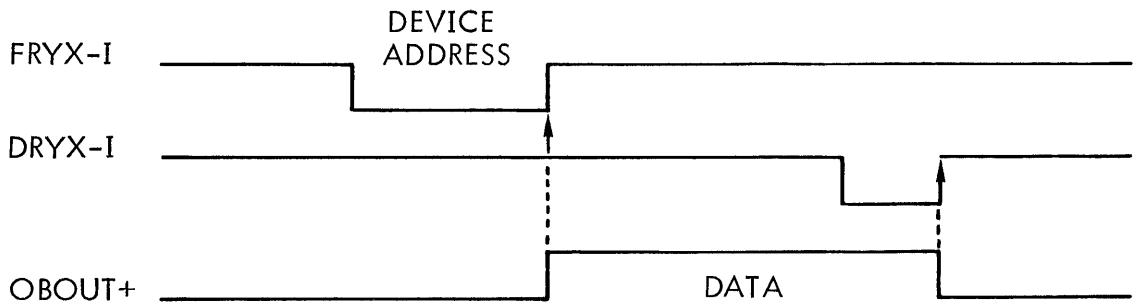

VTII-1563

Figure 4-1. Common-Logic Timing for Data-Transfer-In

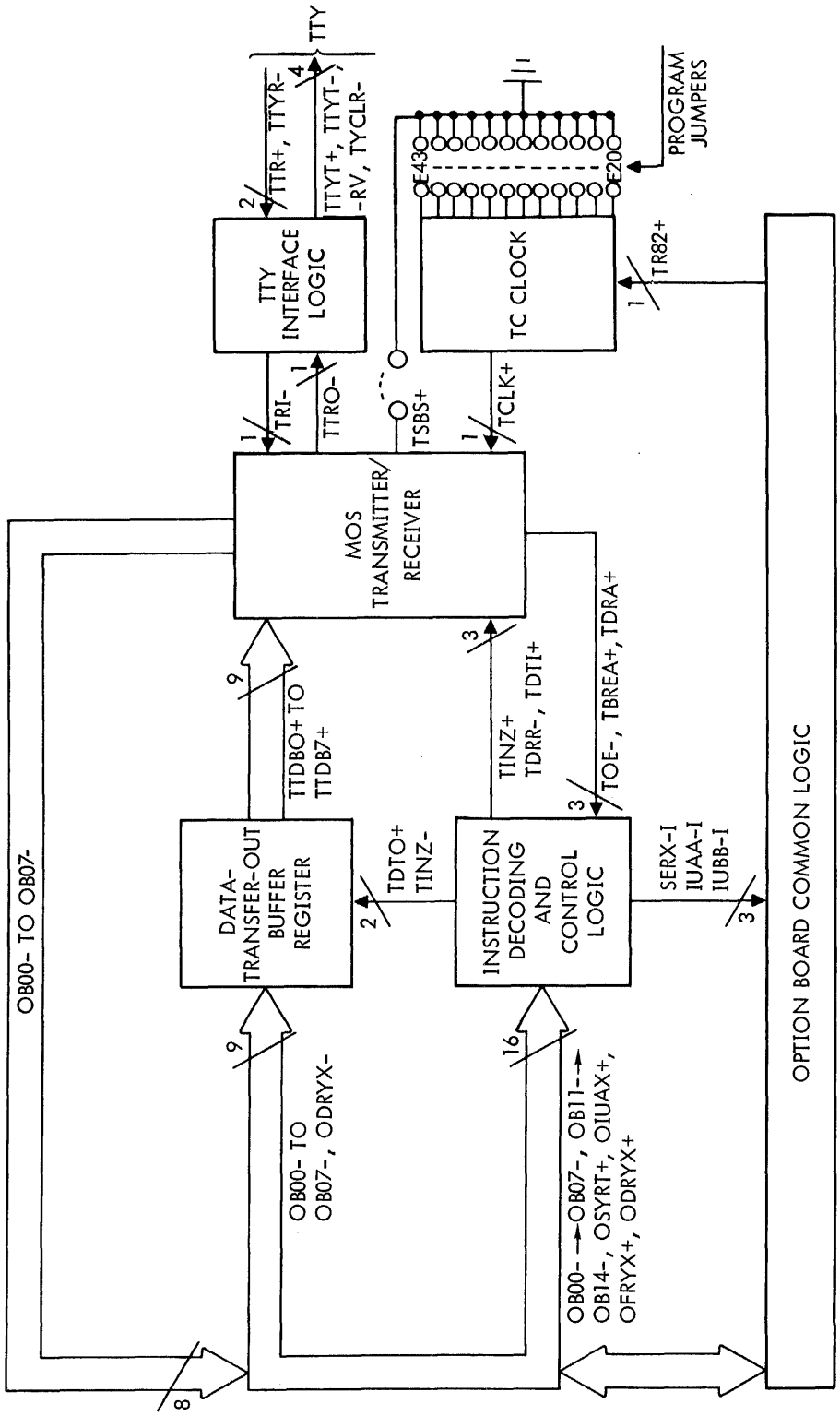

VTII-1564

Figure 4-2. TC Block Diagram

BAUD RATE	E42 TO E43	E40 TO E41	E38 TO E39	E36 TO E37	E34 TO E35	E32 TO E33	E30 TO E31	E28 TO E29	E26 TO E27	E24 TO E25	E22 TO E23	E20 TO E21
110 bps *	X	X	X	X		X	X	X		X		X
150 bps	X		X	X	X	X		X	X	X	X	
300 bps		X	X		X	X	X	X				
1200 bps			X	X			X	X	X	X		X

X = INSTALL JUMPER
* = 110bps IS STANDARD

VTII-1565A

Figure 4-3. TC Clock Jumpers for Various Transfer Rates

4.1.1.1 Teletype Interface

The TC interfaces a model 33 or 35 TTY via the option board TTY connector. The TTYs are modified at the factory prior to delivery to the customer. To modify the 33 ASR TTY:

a. Set the TTY for 20 mA operation. This includes the addition of a wire that enables the TTY to supply "battery" for the send and receive data loops to the clock card (the TTY is the current source for the TC optical couplers).

b. Set the TTY for full-duplex operation.

c. Disable the WRU contacts.

d. Disable parity on the keyboard.

e. Modify the answer-back drum.

f. Install the 180801 function lever.

The model 35 is similarly modified. Model 33 and 35 TTYs are electrically interfaced and cabled to the TC in almost the same manner, even though they are physically quite different in appearance and in their internal operation.

The cable used for the TC/TTY interface for the 33 ASR runs from S connector plug P2 in the TTY to option board TC connector J8 at the rear of the CPU. The S connector is located at the right rear, top row second connector from the right. The TTY cable is normally 20 feet long with nine leads, three of which are used with standard Teletypes.

The TTY end of the cable (P2) includes two other wires. Pins 7, 4, and 5 are interconnected. These connections tie together internal TTY leads brought into the S connector plug as part of the wiring. Note that both ends of the cable are keyed to ensure proper mating.

NOTE

The TTY cable is normally installed at the TTY by Sperry Univac before customer delivery. The model 33 TTY requires about 3 amperes of ac power, and the model 35 TTY about 6 amperes.

TTY DESIGN: The 33 ASR is primarily designed for light to medium use. Normally, it is the basic computer input/output device and is the most widely used unit. Its full-duplex operating mode allows simultaneous input and output.

The 35 ASR performs the same function as the 33 ASR, but it is designed for heavy sustained use.

The 35 KSR is used for keyboard send/receive only and lacks the paper tape punch (PTP) and paper tape reader (PTR) capability of the ASR models. The operating characteristics are similar to model 33 keyboard operation. This unit is also designed for heavy, sustained use.

TTY INPUT METHODS: TTY input can be via the keyboard or the PTR. At the keyboard, the operator types at a random rate not greater than 10 characters per second (cps), the maximum rate for TTY input. Standard eight-level paper tapes are read by the PTR at a rate of 10 cps.

TTY OUTPUT METHODS: TTY output is either printed (typed) or punched on paper tape. For the printer or the PTP, the TC sends control codes or data at a random rate or at the maximum output rate of 10 cps. Data are printed, or control functions, such as line feed or carriage return, are performed on the printer. Similarly, control codes regulate the operation of the PTP, and data are punched into eight-level paper tape.

TTY SWITCHES: The ON/OFF switch controls the motor. The power supply and battery for TC relay drivers remain on, independent of this switch.

The line switch controls the TC/TTY interface. In the ON-LINE position, the interface is complete, and the TTY is under CPU control. In the OFF-LINE position, the TTY is independent of the TC, and can be used for printing or preparing tapes.

The following switches control the tape and are not on the 35 KSR. The START/STOP/FREE switch on the PTR causes the tape to move in START, to stop in STOP, and to be released from the sprocket drive wheel in FREE. Pressing BSP on the PTP backspaces the tape one character. Pressing REL removes pressure from the tape. Pressing LOCK ON locks the punch on (prevents change of punch status). Pressing UNLOCK unlocks the punch and enables punch status change by the TC or from the keyboard.

The 35 ASR mode switch mechanism enables the following operating modes.

Position	Keyboard	Reader	Printer	Punch
K	On line	Disabled	On line	Off Line
KT	On line	On line	On line	On line
T	Off line	On line	On line	Off line
TTS	Off line	On line	Disabled	Off line
TTR	Off line	Disabled	Disabled	On line

TTY FUNCTION CODES: The TTY receives the following control codes from the TC that cause it to perform specific functions. An enabling code must follow a disabling code. (Codes R, T, Q, and S are not applicable to the 35 KSR.)

Code	Bit Format	Function
Control A	10000001	Enable printer
Control D	10000011	Disable printer
Control R	10010010	Enable punch
Control T	10010100	Disable punch
Control Q	10010001	Enable reader
Control S	10010011	Disable reader

OPTICAL COUPLER ISOLATION: Optical couplers (figure 4-4) in the TC comprise the actual interface between the TC and the TTY. The couplers physically and electrically isolate the two units. The receiving coupler, is driven by the TTY. The sending coupler, is driven by the TC. The couplers switch approximately 20 milliamperes of current on or off the line. This method of interfacing is called "make/break". Each coupler can be said to drive or be driven by a current loop. When there is current flowing through a coupler, the current loop is closed. The line is then in the **make** condition (also referred to as the **mark** condition). When no current is flowing through the coupler, the current loop is open. The line is then in the **break** condition (also referred to as the **space** condition). The steady state of the loops is the *mark* condition when both the computer and TTY power supplies are on, and both couplers are active. When computer power is off the current loop is maintained on the transmitter via the coupler and is kept in the *mark* condition. When the TTY power is off, the steady state of the current loop is in the *break* condition, and neither is active.

Except for the difference in switching control location, the input and output loops have identical functions. The factory-modified system is full-duplex to provide simultaneous transmission of data in both directions.

The current source for the two loops originates in the TTY and is sometimes referred to as "battery." The TC uses no loop source current, since it is isolated by the optical couplers. Typical current in a factory-modified TTY interface loop is 20 mA.

The coupler-controlled current-loop interface method enables the processor-TC and the TTY to be placed far apart without noise interference, ground loops, etc., affecting the system. Normally, the TTY cable is 20 feet long.

When either the TTY or the TC sends data, the optical couplers operate (make or break) to conform to the character pattern being sent. Characters are sent or received serially by the current loop.

TTY CHARACTER BIT FORMAT: Each Teletype character or command is serial and is divided into 11 periods or bits consisting of one start bit, eight data bits, and two stop bits (see figure 4-5).

The bit pattern for the character shown in figure 4-5 is 10101011. The bit length is 9.1 milliseconds and the bit rate is 110 bits per second (bps). The character length is 100 milliseconds, and the character rate is 10 cps. The start bit is always a space = zero bit = no current in loop = loop open. Data bits are either mark or space. A mark = one bit = current in loop = loop closed.

The eighth data bit is always mark. It can be used by the TTY as an even parity bit (optional). The stop bits in the character bracket the data bits. This simplifies the design and operation of the TC input circuitry.

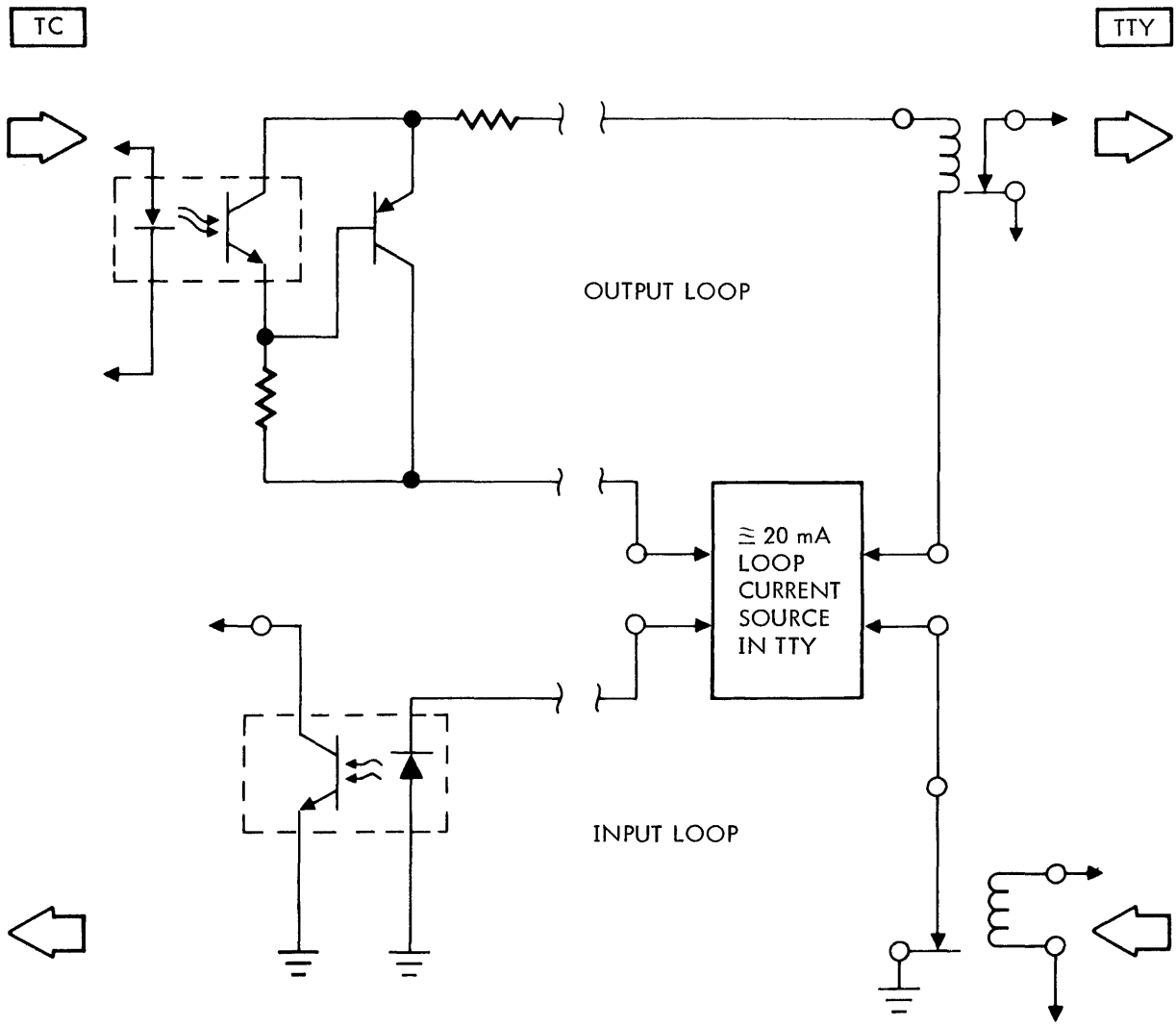

NOTE: Equivalent, not actual, circuit with two independent current loops for full-duplex operation. The current loops may have a single common current source and return wire. Isolation is achieved by optical couplers.

VTII-1567

Figure 4-4. Optical Coupler Isolation for TC/TTY Interface

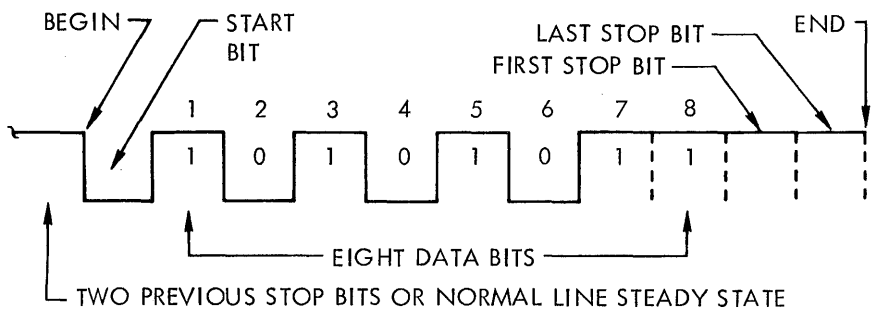

VTII-1568

Figure 4-5. Typical TTY Character

NOTE

The expression, the TTY is running open, means the send loop to the TTY lacks current = steady spacing condition. This occurs if coupler K2 remains open, if the loop current source fails, or if the send loop opens at any point.

TTY INPUT CHARACTER: The receiving circuitry synchronizes at start-bit time. The bit pattern is sampled and shifted in the center of the start bit and continues at the center of each data bit through to the eighth data bit (figure 4.6). When the last data bit has been sampled and shifted, the character is ready for transfer to permanent storage (e.g., the computer). The TC enables transfer to the CPU at the end of the first stop bit. The stop bit period is used for the transfer of the character to the processor; therefore, these bits are not sampled.

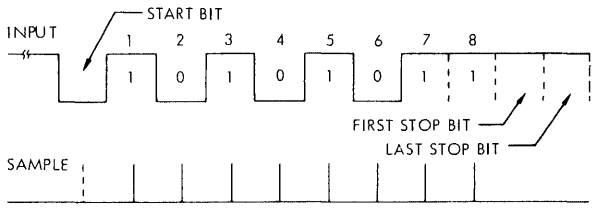

VTII-0559

Figure 4-6. Input Character Sampling

To keep the receiving unit synchronized with the sending TTY, the receiving oscillator or equivalent timing circuit must be allowed to stop and restart when the start bit for the next character occurs. If the sending device outputs a new start bit before the receiving oscillator has time to stop and recover, the two units are out of synchronization and erroneous data result. The next new character start bit may occur immediately after the stop bit or may not occur for an indefinite time interval. This is typical of asynchronous transmission. The receiving unit must be able to receive and synchronize to new data at any time.

TTY OUTPUT CHARACTER: The TTY is assumed ready to receive data at any time. The TC output sequence begins when a character is loaded in the MOS transmitter. A continuously running oscillator circuit is synchronized when ready to send a start bit. All bit times (start and data) are equal, and each bit takes 16 oscillator periods.

When the last data bit is sent, the TC obtains a new character from the CPU in preparation for the next character transmission. The oscillator in the TC continues to run during the stop bit. Typically, the TC obtains a new character during the last stop bit. If there are no more output characters, the TC oscillator continues running and places a steady one-bit level on the output line. The TTY can then await a new start bit which occurs on the next output character.

ASYNCHRONOUS TRANSMISSION: The previous paragraphs detailed basic TTY input and output. Several points should be stressed:

a. The sending unit transmits at a full or random rate at any time.

b. The receiving unit must be able to accept data at any time, at a full or random rate.

c. The receiving unit must resynchronize with each new start bit (every character) to maintain proper synchronization.

d. The length of the output character must be carefully maintained. The receiving circuit can normally tolerate some distortion (less than 1/2 bit per total character). The waveforms of figure 4-7 illustrate an example of proper output character length but maladjusted input timing.

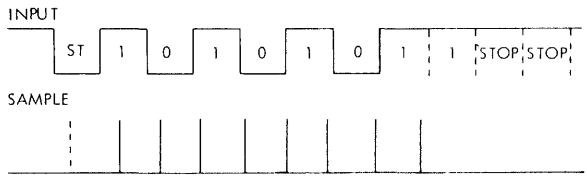

VTII-0558

Figure 4-7. Maladjusted Input Clock

4.1.1.2 PIM Interface

The TC provides two interrupt line outputs; one (IUBB—I) indicates that the input buffer is ready, a second (IUAA—I) indicates that the transmitter is ready for another byte of data. These lines must be wired to PIM interrupt line inputs when it is desired to operate the TTY under interrupt control rather than sense control. The computer system must, of course, contain a PIM to operate under interrupt control.

4.1.2 Circuit Description

The TC operating theory described herein is a sequential series of functional operations that exercise the TC circuits. To better understand the functional operation of the circuits themselves, refer to logic diagram 91B0401 (system documentation package), timing diagrams (figures 4.8 through 4-12), mnemonics (section 6), and interface data (section 4.1.1).

4.1.2.1 Initial Condition

When computer power is first turned on, the TC and the processor circuitry are in an undefined state. Pressing the RESET switch on the control panel initializes the TC (and the processor) to properly perform various functions under program control. This enables the TC to monitor the TTY for input characters and to accept output characters from the processor to the TTY. When initialized, the TC also

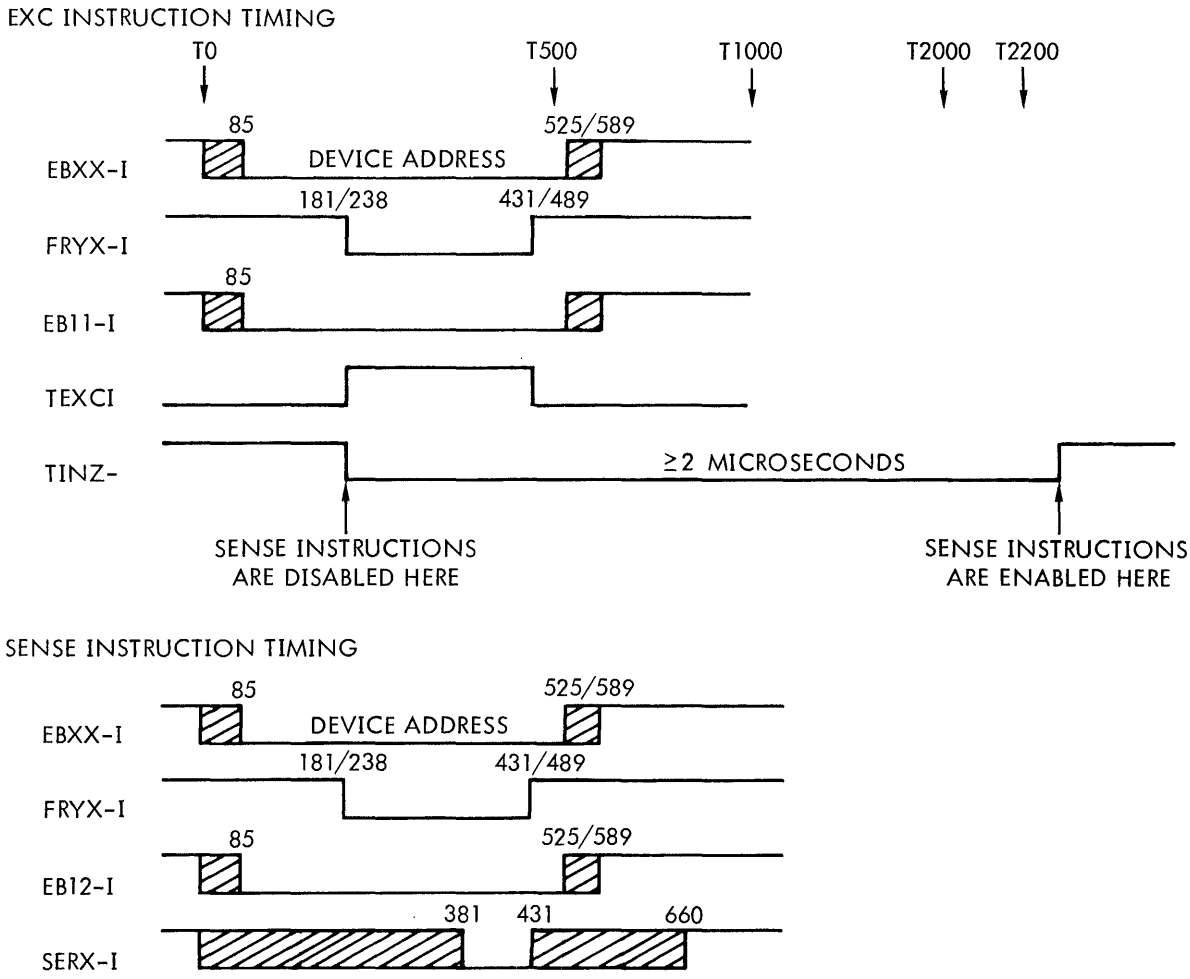

VTII-1569

Figure 4-8. TC Control Timing

transmits a steady mark to the TTY by keeping the transmitting optical coupler active. The TC can also be initialized under program control but the instruction cannot be issued while the TC is in communication with the TTY. Figure 4-8 shows the software initialization timing.

NOTE

An initialization instruction performs the same function as pressing the RESET switch.

4.1.2.2 TC/Common-Logic Interface

The processor controls the TC with external control and data transfer instructions via the option bus. When such an instruction is issued, the following device sequence occurs: TDA+ is high if the proper address (01) is put on the option bus and OIUAX+ is low (no interrupt or DMA). TDA+ high enables the instruction-generation gates.

The functions of the option bus signals are: OB00– through OB05– enable the device address signal TDA+. OB06– enables the output-ready sense response TTS+. OB07– enables the input-ready sense response TRS+. In addition, the bidirectional signals OB00– through OB07– enable the data-transfer-out buffer register. OB11– enables the software reset one-shot, OB12– enables sense response SERX–I, OB13– enables the input sequence, and OB14– enables the output sequence.

OIUAX+ inhibits TC selection when the processor has an interrupt or direct memory access (DMA) in process. The processor can issue any of several instructions. All of the following instructions issue a device address and OFRYX+ (FRYX—I) and several issue ODRYX+ (DRYX—I).

a. Sense output ready (OB06–): OFRYX + only

b. Sense input ready (OB07–): OFRYX + only

c. Execute (initialize) (OB11–): OFRYX + only

d. Output (load transmit buffer register) (OB14—): OFRYX + and ODRYX +

e. Input (read input buffer register) (OB13—): OFRYX + and ODRYX +

Figures 4-8, 4-9, and 4-12 contain the timing diagrams for these instructions.

If a sense condition is met, SERX—I goes low. Under sense control a sense instruction is normally issued before input or output. SERX—I low is enabled by either TTBREA + or TRS +, the latter being the AND of TOE— and TDRA +.

TTBREA + and TRS + signify respectively that the TC has an input character or is ready to accept an output character.

When initialized, the TC is set to enable immediate output under processor control. TRS + is not true until the TTY has loaded a complete character into the receiving half of the receiver/transmitter.

When the processor issues an output instruction, an OFRYX + /ODRYX + sequence sets and resets flip-flop TDTO +. When the processor issues an input instruction, an OFRYX + /ODRYX + sequence sets and resets flip-flop TDTI +.

4.1.2.3 TC Output (Write)

During a TC output operation, portions of the TC/common-logic interface, output timing control, the MOS trans-

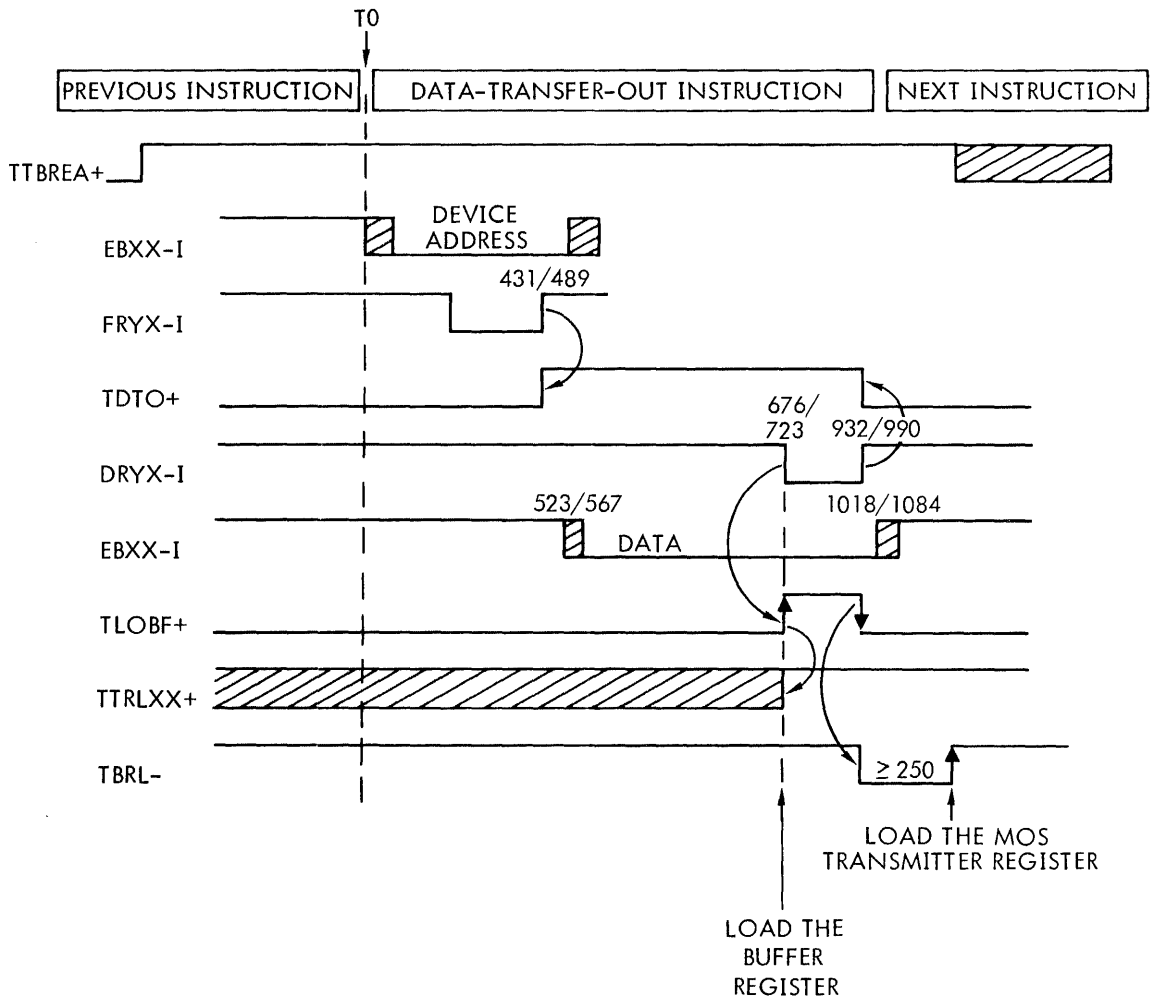

VTII-1570

Figure 4-9. Processor-to-TC Output Timing

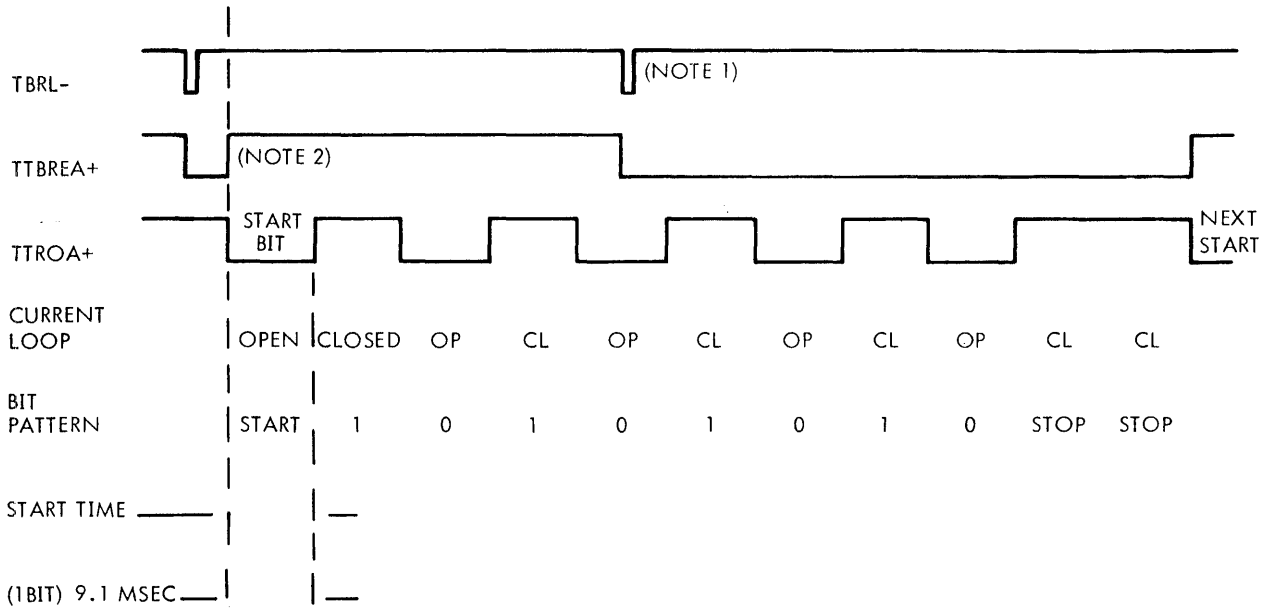

NOTE 1: The MOS transmitter is double-buffered to permit loading of a second character at any time during the transmission of the first character except when TTBREA+ is low.

NOTE 2: Clock detail (16x)

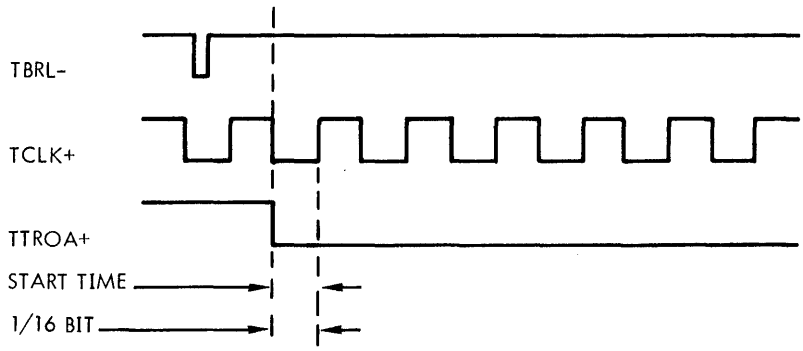

Start time, the negative transition of TTROA+ for the start bit, is on the first negative transition of TCLK+ following the negative, asynchronous TBRL- pulse.

VTII-1571

Figure 4-10. TC Data-Transfer-Out Timing

mitter/receiver, and portions of the TC/TTY interface are used. Circuit elements are control flip-flops, a group of gates enabled by the option-bus signals, a programmable free-running clock that is synchronized with the processor, the transmitting half of the MOS transmitter/receiver, and an output coupler to the TTY with associated drivers. The data and control output waveforms illustrate the loading of the output from the processor to the TC and thence to the device (figures 4-9 and 4-10). For these waveforms, assume that the TC has been initialized, the transfer rate is 110 bps, the data is in 11-bit format, the processor has sensed write ready and has issued an output instruction, and the output character is 10101010 binary. Data are output from the processor in a two-word format: the first contains the device address (01) and tee function, and the second is character data. The device address is sampled on the trailing edge of FRYX—I, and data are sampled on the trailing edge of DRYX—I.

4.1.2.4 Loading the Output Buffer and MOS Transmitter

Loading of the output buffer register occurs from the leading to the trailing edge of DRYX– I. The data present on the buffer register inputs at the trailing edge of DRYX– I are latched into the buffer and presented to the MOS transmitter via TTDB0 + through TTDB7 + . The trailing edge of DRYX– I also enables the TBRL– loading signal to the MOS transmitter. The character to be transmitted is loaded into the MOS transmitter on the trailing edge of TBRL– .

4.1.2.5 Output to the TTY

When the character to be transmitted has been loaded into the MOS transmitter buffer register, automatic data-transmission begins. The MOS device generates the start-bit, eight data bits, and two stop-bits without the intervention or supervision by the TC. The MOS transmitter serial-output signal TTRO + goes low to signal, via the optical coupler, the beginning of transmission.

4.1.2.6 TC Input (Read)

During a TC input operation, portions of the TC/TTY or TC/Infoton interface, input timing control, the MOS transmitter/receiver, and portions of the TC/common-logic interface are used. Circuit elements are control flip-flops, a group of gates to enable the option bus, and an input optical coupler from the TTY. The data and control waveforms illustrate the loading of the input from the device to the TC and thence to the processor (figures 4–11 and 4–12). For these waveforms, assume that the TC has been ini-

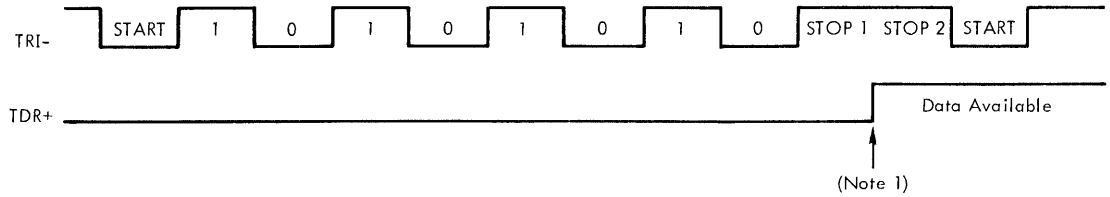

NOTE 1: At a continuous transfer rate, the processor has approximately one "character time" to respond and read the character out of the MOS receiver. If an input instruction is not issued during this period, data are lost.

VTII-1572

Figure 4-11. Input Timing TTY to TC

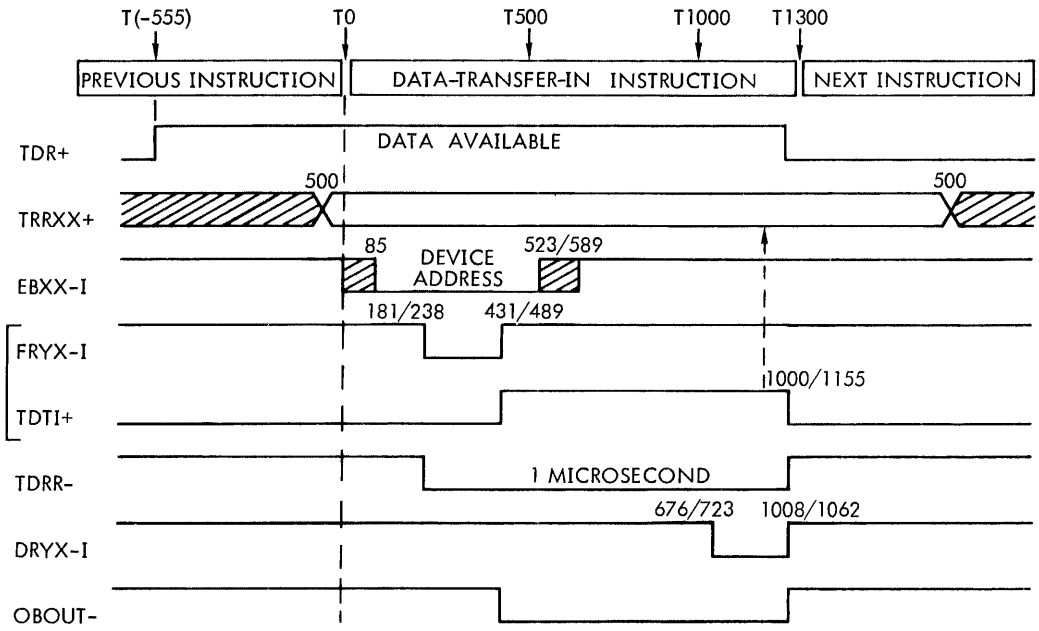

VTII-1573

Figure 4-12. TC Data-Transfer-In Timing

tialized, the device has just begun to transmit a character, and the input optical coupler is deactivated. Character reading is initiated by the negative transition of TRI- signaling the start-bit. From this transition to the positive transition of the data-ready signal TDR+ all operations are under control of the MOS transmitter. The positive transition of TDR+ indicates that the character has been received and loaded into the MOS device. About 500 nanoseconds later the data appear at the MOS device outputs TRR00 + through TRR07 +. *The processor has approximately one "character time" to execute a data-transister-in instruction before data are lost.* During the execution of this instruction, the common-logic drivers are enabled by OBOUT- low. TDRR- clears the TDR flip-flop within the MOS device, and prepares the next character. Data are transferred to the processor on the trailing edge of DRYX-I.

4.1.3 Programming

The TC can be programmed directly under processor control (with or without interrupts).

The TC can supply interrupts (input ready and output ready) to the PIM when this option is included in the computer system, thus saving computing time and simplifying software since programmed delay and sense loops can be avoided. With this feature, the program running in the processor is interrupted at the proper time.

The software initializes the TC (as does pressing the RESET switch on the control panel). The TC is then ready to accept output from the processor and is also capable of accepting an input character from the TTY. The software normally issues a sense instruction and, if a sense-ready condition exists, follows it with a reading (input) or loading (output) instruction to enable the data transfer of one character between the TC and the processor.

Except for interrupts, the TC operates, for TTY operations, within the following general timing restrictions.

Output: Maximum data transfer rate is 10 characters per second. There is no minimum rate. The processor can output a single character, discontinue output for an indefinite period of time (longer than 100 milliseconds), and then output another character without loss of data or synchronization.

Input: Maximum data transfer rate is 10 characters per second (100 milliseconds per character). The processor must read the input character transferred from the TTY by the TC during the last (second) 9.1-millisecond stop-bit period. If the processor fails to read the character input during this time and before the TTY inputs again, the character is lost.

The TC and the TTY respond to the instructions listed in table 4-1 and the standard TTY codes in table 4-2. The initializing instruction performs the same function as the RESET switch on the computer console. The TC is prepared to accept processor output and to monitor TTY input. This instruction can not be issued while the TC is communicating with the device.

The sensing instructions are the sense ready-to-read and the sense ready-to-write instructions, which enable the processor to determine TC status. If the sense condition is met, a data transfer can proceed. If the sense condition is not met, the processor must wait to perform data transfer. A sense instruction can be issued at any time and normally precedes any data transfer instruction.

The data transfer instructions are, the read (input) and load (output) instructions, which transfer data between the processor and the TC through the read and write registers. Issuing a reading or loading instruction at the wrong time results in incorrect data transfer.

Table 4-1. TC and TTY Instructions

Mnemonic	Octal Code	Functional Description
	External Control	
EXC 0401	100401	Initialize
	Transfer	
OAR 01	103101	Transfer the A register to the transmit buffer register
OBR 01	103201	Transfer the B register to the transmit buffer register
OME 01	103001	Transfer the memory address to the transmit buffer register

(continued)

Table 4-1. TC and TTY Instructions *(continued)*

Mnemonic	Octal Code	Functional Description
INA 01	102101	Transfer the input buffer register to the A register
INB 01	102201	Transfer the input buffer register to the B register
IME 01	102001	Transfer the input buffer register to the memory register
CIA 01	102501	Transfer the input buffer register to the cleared A register
CIB 01	102601	Transfer the input buffer register to the cleared B register
	Sense	
SEN 0101	101101	Transmit buffer register ready
SEN 0201	101201	Input buffer register ready

TTY Instruction Codes

Function	Symbol	Code	Typed As
Print Enable	SOM	201	Control and A
Print Suppress	EOT	204	Control and D
Reader On	XON	221	Control and Q
Punch On	TAPE	222	Control and R
Reader Off	XOFF	223	Control and S
Punch Off	TAPE OFF	224	Control and T

Table 4-2. ASCII TTY Codes

@	300	X	330
A	301	Y	331
B	302	Z	332
C	303	[	333
D	304	\	334
E	305	]	335
F	306	↑	336
G	307	←	337
H	310	Blank	240
I	311	!	241
J	312	"	242
K	313	#	243
L	314	$	244
M	315	%	245
N	316	&	246
O	317	'	247
P	320	(	250
Q	321	)	251
R	322	*	252

(continued)

Table 4-2. ASCII TTY Codes *(continued)*

Teletype Symbol	ASCII Code	Teletype Symbol	ASCII Code
S	323	+	253
T	324	,	254
U	325	-	255
V	326	.	256
W	327	/	257

4.2 POWER FAILURE/RESTART

The operation of the **power failure/restart (PF/R)** (figure 4–13) includes:

- PF/R - power supply interaction
- PF/R - processor interaction
- PF/R internal functions

NOTE: The PF/R is operative only when the computer is in RUN mode. If the computer is in STEP mode when power is lost, the PF/R interrupt is not acknowledged and the contents of the volatile registers are lost.

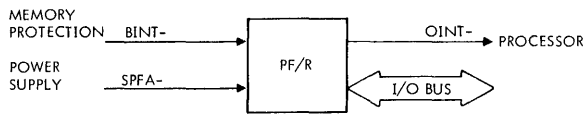

VTII-1574

Figure 4-13. PF/R Functional Block Diagram

In the **PF/R-power supply interaction**, the computer power supply generates a low power-failure signal at the start of a power-up sequence. When all dc voltages are within their operating ranges and the line voltage is 105V ac or higher, the power-failure signal goes high. This positive transition triggers the PF/R power-up sequence.

When power is lost or below minimum requirements for computer operation, the power failure signal goes low. The PF/R then generates an interrupt request, causing the processor to execute the SAVE subroutine if the computer is in run mode. In halt mode, the processor does not acknowledge the request. In this case, the memory and processor are immediately disabled, and the contents of the volatile registers are lost.

During a power loss, the PF/R interrupt request is not acknowledged until the instruction in process completes execution. If the instruction requires multilevel addressing, this acknowledgment can be delayed up to five memory cycles, depending on the number of addressing levels (one machine cycle per level). DMA memory activity can also delay the interrupt processing up to one DMA cycle.

SAVE includes operations such as storing the contents of the volatile registers so that the interrupted program can complete execution when power is restored.

The power supply causes the system-reset signal to remain low from turn-on to 100 microseconds before the positive transition of the power-failure signal, thus disabling the processor. When the power-failure signal goes high, system reset is removed and the interrupt clock is enabled. Approximately 900 nanoseconds later, the PF/R simultaneously places the processor in run mode and requests an interrupt. The processor acknowledges the request by jumping to address 042 as specified by the PF/R. The processor then executes the PF/R RESTORE subroutine, during which all other interrupts are disabled. At the completion of RESTORE, the processor jumps back (under program control) to the program being executed when power was lost and reenables all other interrupts.

During a power-down sequence, the power-failure signal remains low as long as power failure conditions exist. Following the negative transition of the power-failure signal, the PF/R interrupt request logic is enabled. The processor then, after executing the current instruction, acknowledges the request by jumping to interrupt address 040 and executing the PF/R SAVE subroutine, during which all other interrupts except memory protection are disabled.

Approximately one millisecond after SPFA– goes low, the power supply generates SRST–, which disables the processor and memory.

The usual SAVE and RESTORE subroutines use a halt/run flag to indicate whether a power failure occurred while the processor was in HALT mode. If so, the flag is unchanged, since SAVE was not executed. Upon restoration of power, RESTORE examines the flag to determine whether the previous data can be restored in the volatile registers or a HALT is required.

The **PF/R internal logic** consists of three functional blocks: sequencer, system start, and interrupt request.

The *sequencer* logic sends control signals to the other PF/R logic sections to generate the required output signals.

The *system start* logic produces a short pulse for starting the system when state 01 is true.

The *interrupt request* logic generates signals to request an interrupt cycle and to define the memory address of the interrupt. The interrupt priority logic generates a signal that disables lower-priority options and peripheral controllers when the PF/R is executing a power-up RESTORE subroutine or a power-down SAVE subroutine.

4.2.1 Timing

Figures 4-14 and 4-15 show the PF/R power-up timing on the power-supply and processor interfaces, respectively. Figures 4-16 and 4-17 show the PF/R power-down timing on the interfaces. Figure 4-18 shows the sequence of events in the PF/R control logic.

The significance of the timing considerations in the operation of the PF/R is discussed in the descriptions of the circuits (section 4.2.2).

4.2.2 Circuit Description

To better understand the functional operation of the PF/R circuits in this section, refer to logic diagram 91B0401 (system documentation package), timing diagrams (section 4.2.1), and mnemonics (section 6).

A **power-up** condition exists when the power-supply dc voltages are all within their operating ranges and the line

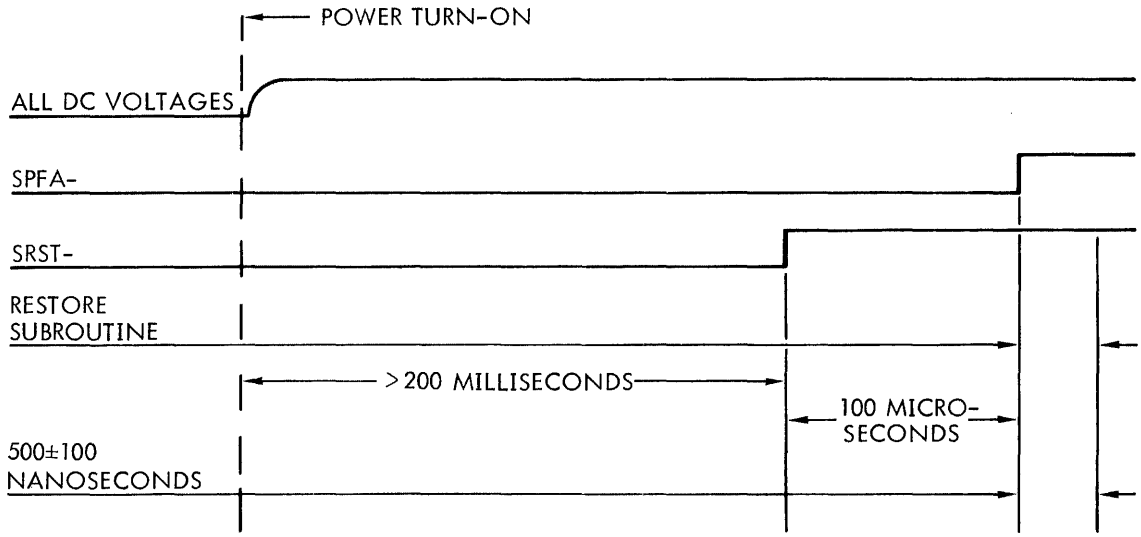

VTII-1575

Figure 4-14. Power-Up Timing at the Power Supply-PF/R Interface

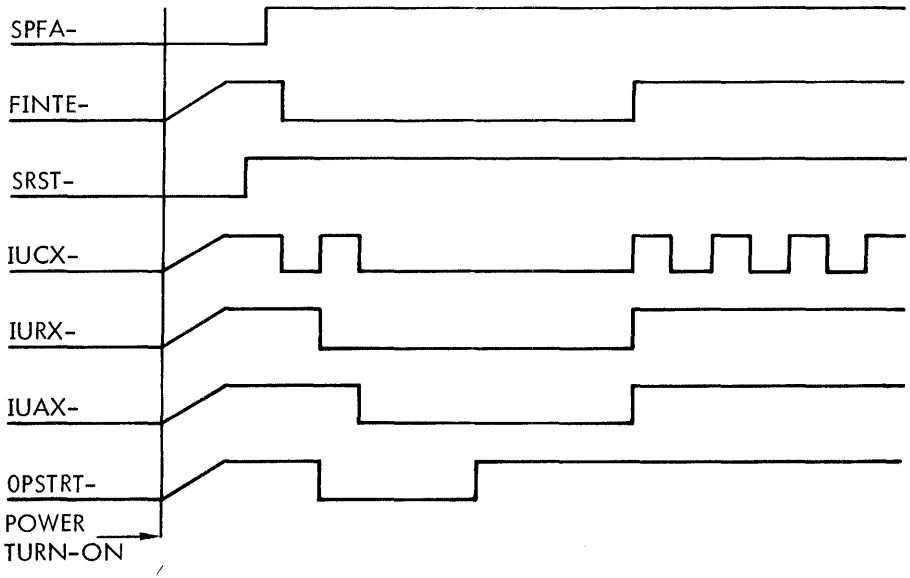

VTII-1576

Figure 4-15. Power-Up Timing at the PF/R-Processor Interface

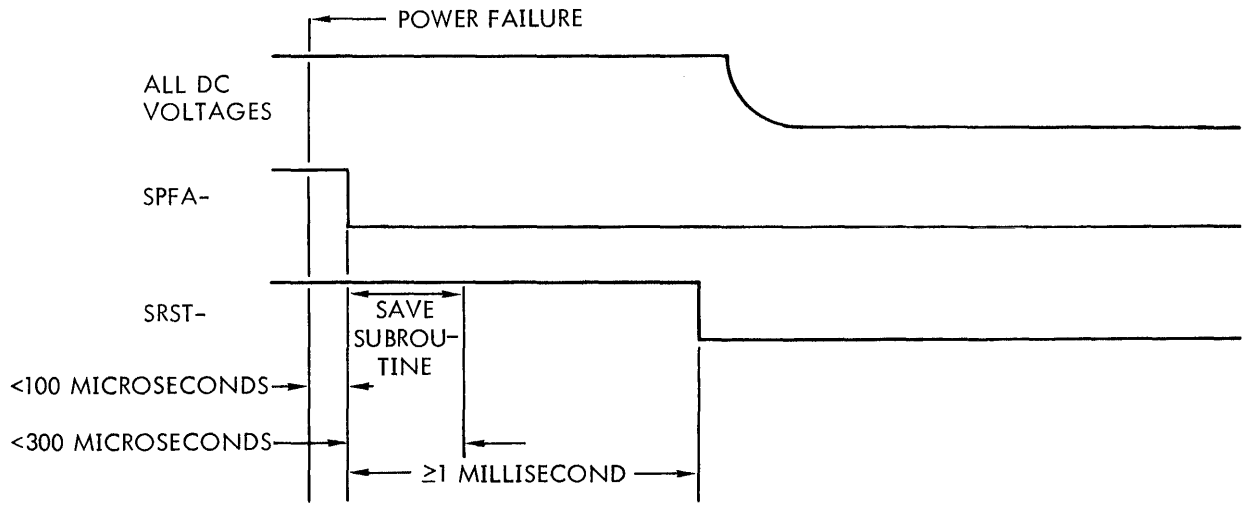

VTII-1577

Figure 4-16. Power-Down Timing at the Power Supply-PF/R Interface

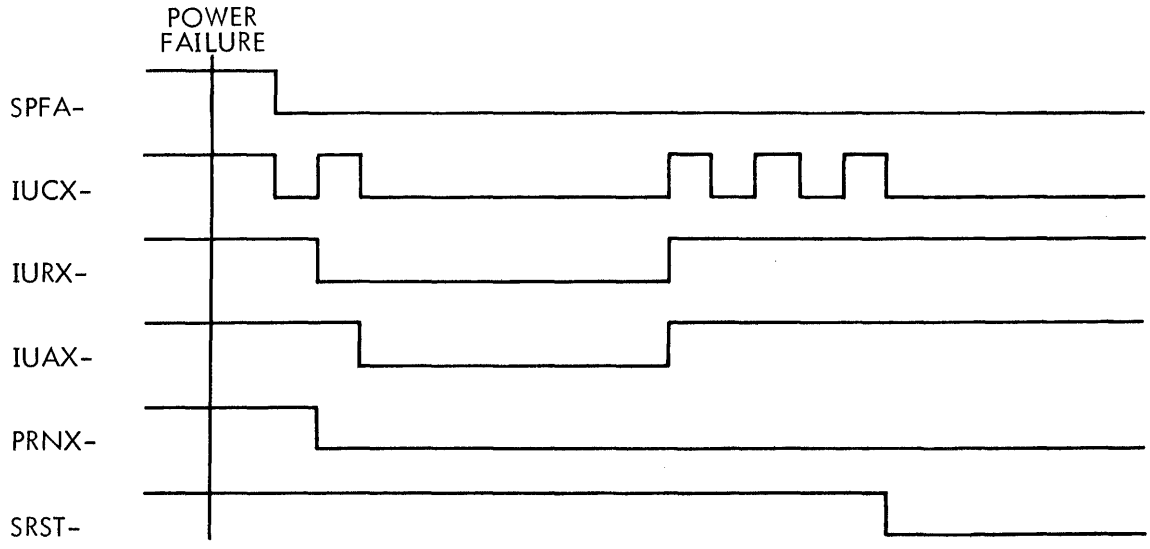

VTII-1579

Figure 4-17. Power-Down Timing at the PF/R-Processor Interface

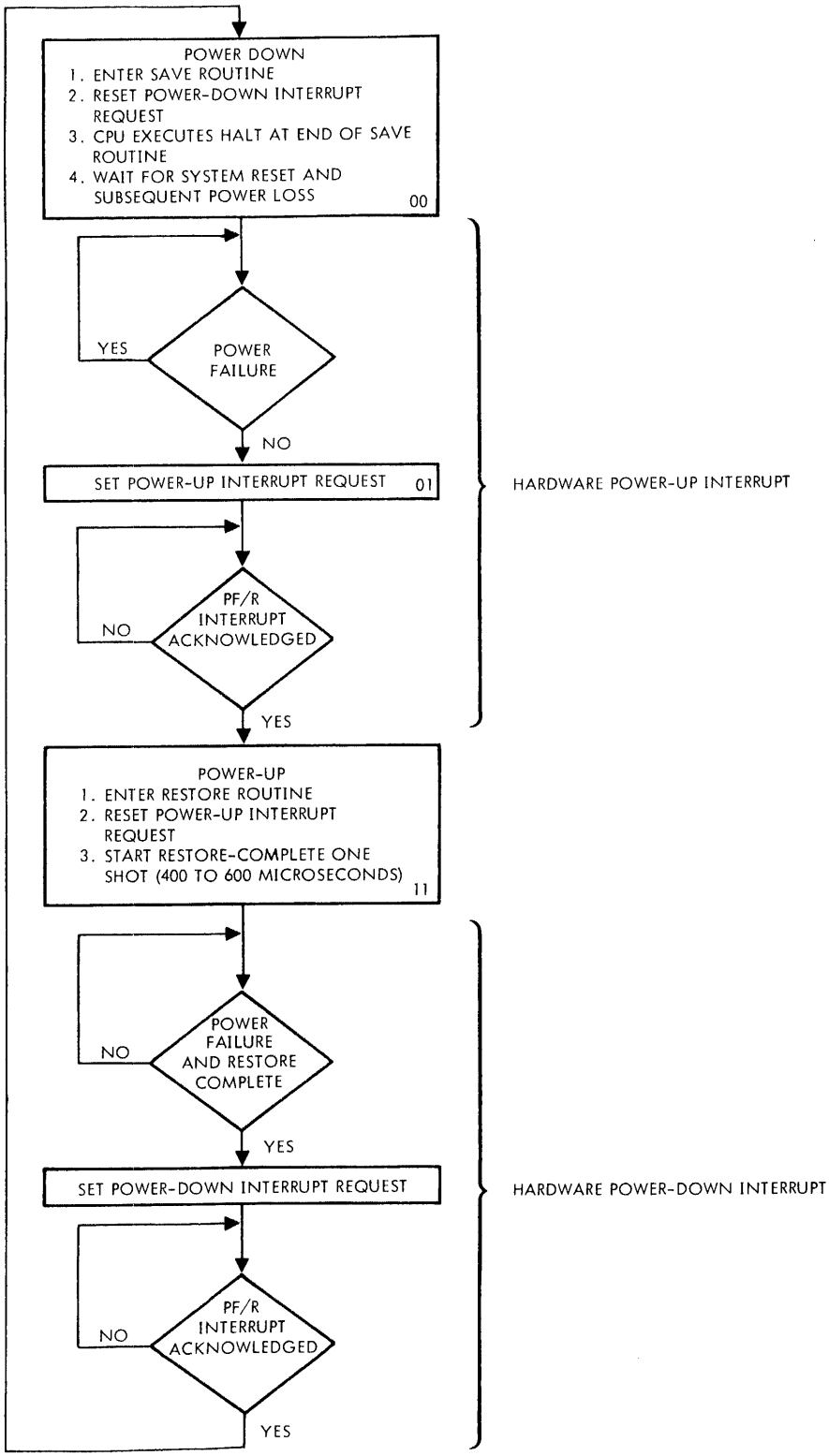

VTII-1580

Figure 4-18. Control Logic Sequence

voltage is 105V ac or greater. A **power-down** condition exists when one or more of the power-up requirements is not fulfilled.

Prior to the beginning of a **power-up sequence**, SPFA– and SRST– are low. The sequence begins when the power supply forces SRST– high. Approximately 100 microseconds later, SPFA– goes high. The initializing flip-flop set-output FCX1 + goes high on the clock transition with the control logic going to state 01. This sets the one-shot and generates system-start pulses OPSTRT– and OINT– . Thus, the positive transition of SPFA– causes the PF/R to enable the interrupts and the CPU to begin execution of the resetore subroutine within 500 to 1000 nanoseconds.

The interrupt request to the CPU for the RESTORE subroutine is generated when the control flip-flop is reset (FC1X– high) and control state 01 signal FCS1– goes low, enabling, when BINT– is high, OIURX– low.

After a request, the CPU activates the interrupt-acknowledgment signal OIUAX + high, and this is gated with BINTE– and FCS12 + . If either control state 01 or 10 is active (FCS12 + high) and the memory-protection interrupt is disabled (BINT– high), the interrupt-address flip-flop set output FIOD + goes high on the positive transition of clock FRYX + . Acknowledgment of the interrupt during power-up causes the control logic to enter state 11, the power-quiescent state. Internal interrupt signals FCS12 + and FIOAK + generate the interrupt address (OB05– and OB01–) and output it to the I/O bus with I/O-transfer control signal OBOUT– .

When an interrupt address is accepted (FIOD + high) in control state 01 (FCS1 + high), the control flip-flop set output FC1X + goes high. The flip-flop clears when FRSTA– goes low.

RESTORE reloads the volatile CPU registers with the same data as they held before power loss, and a jump instruction at the end of RESTORE reenters the interrupted program.

All lower priority options including all interrupts except memory protect are disabled during this time by a low PF/R-active signal FINTE—, generated by either the initialization or control flip-flop. The initialization flip-flop is cleared by a low system-reset signal FRSTA—. Upon completion of restore, FINTE— returns to the high state, allowing the I/O priority chain to become active again.

The system-start logic produces the short pulse OINT– low when the one-shot is set and the PF/R is in control state 01, thus starting the system.

Upon power failure, the **power-down sequence** begins with SPFA– going low, where it remains as long as there is a power-down condition. The negative transition enables the PF/R interrupt-request signals IUCX– and IURX– . When SPFA– goes low and the one-shot expires, the initializing flip-flop output FCX1– goes high on the next negative transition of clock OIUCX + with the control logic going to state 10. The control flip-flop set output FC1X + is high, and is reset when FCS2 + goes high. If the memory-protection interrupt is disabled (BINT– high), OIURX– goes low to enable the PF/R interrupt request to the CPU and cause the CPU to execute the SAVE subroutine.

Memory protection interrupts, if enabled, will be acknowledged first. Acknowledgment of the interrupt after the processor completes the instruction in progress is analogous to the acknowledgment during power-up, except that the control logic enters state 00 on power-down.

The request generates the interrupt address 040 specified by the PF/R, and executes the SAVE subroutine. During this sequence of events, all other interrupts and options except memory protection are disabled.

NOTE: If the processor is in a multiprocessor system and does not have the highest-priority memory port, it may not get port access in time to process the SAVE subroutine after power loss. PMA requests are ignored when the PF/R is active.

4.2.3 Programming

Although the standard Sperry Univac programs do not contain PF/R service routines for saving and restoring contents of the volatile registers and sense switches, the PF/R circuitry provides capability for handling such routines. To utilize this capability, the user can write a SAVE and RESTORE service routine like the one shown in figure 4-19.

During a power-down condition, interrupt addresses 040 and 041 must contain a jump-and-mark to the SAVE routine; during a power-up condition, interrupt addresses 042 and 043 must contain a jump to the RESTORE routine.

If the computer is in the halt mode during a power loss, the PF/R interrupt request is not acknowledged, the memory and CPU are immediately disabled, and the contents of the volatile registers and sense switches are lost.

If a multilevel addressing instruction is in process when power is lost, the CPU acknowledgment of the PF/R interrupt request can be delayed up to five memory cycles. An active DMA request at the time of power loss (SPFA– going low) could delay acknowledgment up to one DMA cycle.

A halt instruction must be located at the end of the SAVE routine. This stops memory activity before SRST– is forced low by the power supply.

The service routine should contain a halt/run flag. This indicates whether a power failure occurred while the processor was in RUN or HALT mode, so that either the volatile registers can be restored or a HALT executed.

The RESTORE routine execution time must not exceed 400 microseconds, and the SAVE routine, 300 microseconds.

```
Label   Mnemonic   Operand        Comment

PWRU    EQU        *              POWER UP ENTRY
        LDA        HLTF           GET HALT IN RUN FLAG
        JAZ        HLTF           JUMP IF POWER FAIL NOT IN RUN

        TZA
        STA        HLTF           RESET HALT IN RUN FLAG
        LDA        SAVS           GET SENSE SWITCH FLAGS
        EXC        077
        OAR        077            RESET SENSE SWITCHES
        LDA        SAVO           GET OVERFLOW FLAG
        JAZ        RSRG           JUMP IF FLAG NOT SET

        SOF                       RESET OVERFLOW
RSRG    LDA        SAVA           RESET A REGISTER
        LDB        SAVB           RESET B REGISTER
        LDX        SAVX           RESET X REGISTER
        JMP        0              RETURN TO INTERRUPTED LOCATION

PWDN    EQU        *-1            POWER DOWN ENTRY
        STA        SAVA           SAVE A REGISTER
        STB        SAVB           SAVE B REGISTER
        STX        SAVX           SAVE X REGISTER
        ZERO       07             ZERO A,B,X REGISTERS
        ADFA                      ADD OVERFLOW TO A REGISTER
        STA        SAVO           SAVE OVERFLOW
        LDBI       2

        XS1        SETB           SAVE SS1 FLAG

        LRLB       1
        XS2        SETB           SAVE SS2 FLAG

        LRLB       1
        XS3        SETB           SAVE SS3 FLAG

        STX        SAVS           SAVE SENSE SWITCH FLAGS
        INR        HLTF           SET HALT IN RUN FLAG
HLTF    DATA       0              HALT IN RUN FLAG
SAVA    BSS        1              SAVE A REG BUFFER
SAVB    BSS        1              SAVE B REG BUFFER
SAVX    BSS        1              SAVE X REG BUFFER
SAVO    BSS        1              SAVE OVERFLOW BUFFER
SAVS    BSS        1              SAVE SENSE SWITCHES BUFFER
SETB    MERG       064            MERG B & X AND SAVE IN X
        END
```

Figure 4-19. Typical PF/R Service Routine

4.3 REAL-TIME CLOCK

The **real-time clock (RTC)** option comprises seven functional blocks: clock-control logic, timing source input logic, free-running counter, variable-interval logic, overflow detection logic, interrupt control logic, and instruction decoding and control logic (figure 4-20). Inputs to the RTC include the internal I/O bus, a 24.2424 MHz signal from the processor, an external timing source, and a power supply line frequency.

The **clock-control logic** produces the 10 kHz clocking signal. Its input is the squarewave signal from the option board's 12.1212 MHz, crystal-controlled I/O clock.

The **timing source input logic** consists of a pulse-shaper for the line frequency sinewave input and the specially wired timing source selection plugboard (figure 4-21).

The **free-running counter (FRC)** provides real-time and event accumulation. Timing is hardware-selectable (figure 4–21) and can be either the line frequency source, an external source, or the variable-interval interrupt rate. The counter is factory-wired to the line frequency unless otherwise specified by the user. It runs continuously, and, if it is wired to the variable-interval logic's zero-detection output, is incremented at the variable-interval interrupt rate even if the interrupt is masked. Only the clear-FRC instruction (EXC 047) resets the counter, which continues to count even while the processor is in step mode.

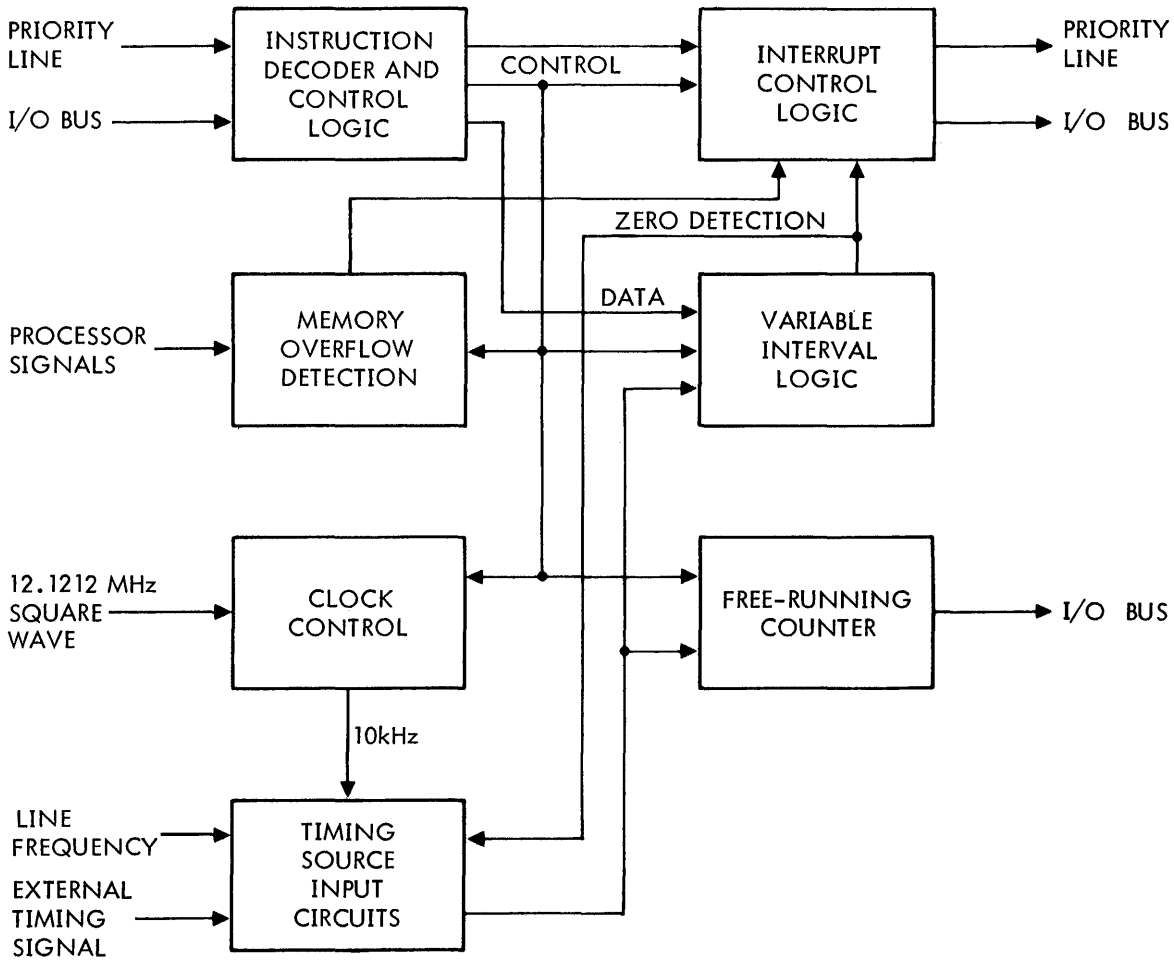

VTII-1578

Figure 4-20. RTC Block Diagram

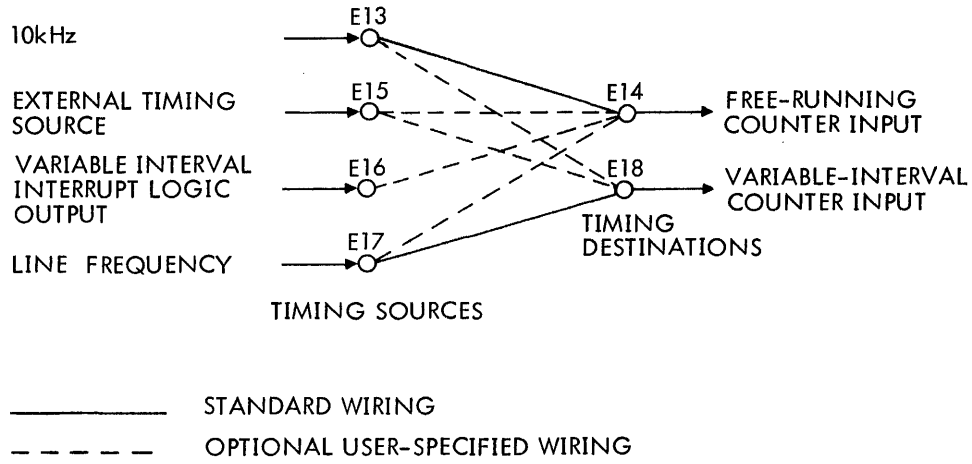

VTII-1581

Figure 4-21. Timing Source Selection

The **variable-interval logic** consists of a 12-bit interval selection register, variable-interval counter, and zero detection logic. Timing for the variable-interval counter is hardware-selectable and can be a crystal-controlled 10 kHz source, an external source, or the line frequency (figure 4-21). The standard source is the 10 kHz signal (unless otherwise specified). Thus, the variable-interval interrupt rate is normally 1 kHz because the interval selection register is loaded with 000012 during initialization of the RTC. The interval selection register is loaded, under programmed I/O control, with a binary number that is proportional to the desired timing interval. The register contents are then transferred to the 12-bit variable-interval counter. The counter is decremented to zero under hardware control and, if the variable-interval interrupt is not masked, the CPU is interrupted. When the variable-interval counter is decremented to zero, it is again loaded from the interval-selection register and again decremented. The variable-interval interrupt occurs continuously at a rate determined by the count in the interval selection register until the interval is changed by the program or until the RTC is reinitialized by the EXC 0447 instruction or when the RESET switch on the computer control panel is pressed.

When the RTC is initialized, the interval selection register is set to 0012. However, if the register count is set, by the program, to zero, the RTC hardware reacts as if the count has been set to 04096.

The **overflow detection logic** requests interrupts of the computer when a specified address in memory is incremented beyond a preselected count and overflow results. When the memory-overflow interrupt is expected, the variable-interval interrupt address (044) *Always* contains an increment memory and replace instruction. The address to be incremented is the next sequential location (045). The overflow detection logic monitors the most significant bit of the processor R register (R14) after a variable-interval interrupt and during the execution of the increment memory and replace instruction. If bit 14 of the memory word is one, this logic generates a memory-overflow interrupt request; i.e., when the incremented address count reaches 040000, the next variable-interval interrupt represents overflow. Thus, the incremented address contains 040001 when the memory overflow interrupt occurs, assuming that the address was initialized to a value under 040000. The interrupt could be set to occur at any value that enables bit 14.

The **interrupt control logic** processes RTC interrupts. When both RTC interrupts (variable-interval and memory overflow) are pending, the variable-interval interrupt has priority. If either or both of the interrupts are masked, this section stores interrupt requests and transfers them to the processor when the interrupts are enabled. The interrupt control logic can store one of each type of interrupt. Subsequent interrupt requests when the interrupts are masked are lost.

The **instruction decoder and control logic** decodes instructions from the processor and generates control signals to enable data transfers, mask or unmask interrupts, and initialize or clear the RTC functions.

4.3.1 Timing

The external timing source supplied by the user must be a positive-going pulse with a minimum pulsewidth of 5 microseconds and a minimum cycle time of 10 microseconds (the negative-level minimum duration is 5 microseconds).

The line frequency source is a 24V ac power supply output. It is shaped by a TTL Schmitt trigger on the RTC circuit board.

4.3.2 Circuit Description

To better understand the function of the RTC circuits shown in figure 4-20, refer to the mnemonics (section 6) and to logic diagram 91B0401 (System Maintenance Manual).

The following subsections describe the seven functional sections of the RTC: the instruction decoder and control logic, free-running counter, clock counter logic, timing source logic, variable interval logic, memory overflow detect logic, and interrupt control logic. Table 4-3 lists the RTC functions in relation to the timing and ranges of the variable-interval interrupt and the free-running counter.

Table 4-3. Major RTC Functions

Function	Variable-Interval Interrupt Source	Range	Free-Running Counter Source	Range
High-rate interval interrupt and interrupt accumulation	10 kHz	100 microseconds to 409.5 milliseconds in 100-microseconds increments	Variable-interval interrupt rate	6.5 seconds to 7.46 hours depending on interrupt rate
High-rate interval interrupt and event accumulation	10 kHz	Same as above	External	Up to 65,536 events

(continued)

Table 4-3. Major RTC Functions *(continued)*

Function	Variable-Interval Interrupt Source	Range	Free-Running Counter Source	Range
High-rate interval interrupt and time-of-day accumulation	10 kHz	Same as above	Line frequency	Up to 18.2 minutes
High-rate interval interrupt and high-rate interval accumulation	10 kHz	Same as above	10 kHz	6.5 seconds in 100-microsecond increments
Low-rate interrupt and interrupt accumulation	Line frequency	16.7 milliseconds to 68.3 seconds in 16.7-millisecond increments	Variable-interval interrupt rate	18.2 minutes to 51.8 days, depending on interrupt rate
Low-rate interrupt and event accumulation	Line frequency	Same as above	External	Up to 65,536 events
Low-rate interrupt and time-of-day accumulation	Line frequency	Same as above	Line frequency	Up to 18.2 minutes
Low-rate interrupt and time-of-day accumulation	Line frequency	Same as above	10 kHz	6.5 seconds in 100-microsecond increments
Event count interrupt and interrupt accumulation	External	One to 4,095 events	Variable-interval interrupt rate	65,536 to 268 million events depending on interrupt rate
Event count interrupt and event accumulation	External	Same as above	External	Up to 65,536 events
Event count interrupt and time-of-day accumulation	External	Same as above	Line frequency	Up to 18.2 minutes
Event count interrupt and time-of-day accumulation	External	Same as above	10 kHz	6.5 seconds in 100-microsecond increments

4.3.2.1 Instruction Decoder and Control Logic

The instruction decoder and control logic consists of receivers and drivers, flip-flops, inverters, logic gates, and an instruction decoder. These logic components decode instructions from the CPU and generate the control signals to enable data transfers, mask or unmask interrupts, and initialize or clear the RTC.

The 16-bit bidirectional internal option bus interfaces the RTC and the processor (OB00– through OB15–). Instructions or data are accepted by the receivers and data are transmitted by the drivers. RB01+, RB02+, and RB05+ assert the RTC interrupt addresses on the option bus.

The instruction decoder is a 3-to-8-line decoder that decodes OB06, OB07, and OB08 into one of the states, REX00– through REX07– (REX05– not used). These signals enable or disable logic functions in the RTC circuits. The instruction decoder is enabled by RFRY+, OB11, and RDA47.

Memory overflow enabling flip-flop RMOE activates the memory overflow detection logic. RMOE is preset by REX01– to enable the RTC. The memory overflow detection logic is disabled by clearing the flip-flop with REX02–, REX03–, or RRST–. The same logic deciphering is true for the set and reset conditions of variable interrupt-enabling flip-flop RVIE. This signal activates the interrupt control logic.

Data-transfer-in and data-transfer-out instructions with OFRYX+ and RDA47, are decoded to RDTI and RDTO, respectively. RPDTO– presets flip-flop RDTO, indicating that the RTC is accepting register selection data from the processor. RDTI and RDTO are clocked by RKFRY– and RDRY–.

The RTC device address is 047 (RDA47). The states of OB00– through OB05– are decoded by a NAND gate and inverter in the absence of the interrupt acknowledgment signal to generate RDA47.

Processor signals OIUCX+, OIUAX+, OFRYX+, and ODRYX+ feed various functional circuits. RPRM+ is a priority signal from a higher-priority device. RRST± is a system reset or initialize-RTC signal.

4.3.2.2 Free-Running Counter

The free-running counter (FRC) consists of 16 flip-flops and can be read under program control. One application of the FRC is to indicate to the processor the elapsed time. By subtracting a previous count from the current count, the processor determines the number of events in a given period of time, the time of day, or the elapsed time. The FRC is controlled by flip-flop RKFCL and gating circuits.

RKFCL is clocked by RFRCK+. The output of RKFCL is the conditioned clock input to the 16-bit FRC flip-flops. The direct clock input sets RKFCL, thereby clocking the FRC. RFREN+ presets RKFCL. This gate prevents RFRCK+ from clearing the flip-flop during a data transfer in (RDTI–

REX00– is output by the instruction decoder. It goes low during an EXC 047 instruction, clearing the FRC. REX00– goes to the FRC as well as to the reset input of RKFCL. When an EXC 047 instruction is executed, RKFCL is initialized high and other FRC flip-flops, to zero. This provides a point of reference for the program in computing elapsed time and time of day. The FRC outputs (RFR00–15+) are routed to the option bus.

4.3.2.3 Clock Counter Logic

The clock counter logic (CCL) adjusts the 12.1212 MHz option board squarewave clock to generate a 10 kHz timing source, R10KH+. This source can be selected as an input to the variable-interval interrupt logic and/or to the free-running counter as desired by the user. The CCL consists of flip-flops, counters, and gating logic. The 12.1212 MHz signal TR82+ feeds a series of counters that reduces the frequency to 20 kHz. Flip-flop R20KH enables the clock to the 10 kHz flip-flop R10KH. The counters can be cleared by RTRST– by any one of the following: RRST– from the SYSTEM RESET switch on the computer front panel, RDTO– during the execution of a data-transfer-out instruction, or REX06– enabled by a software reset.

4.3.2.4 Timing Source Logic

The timing source logic permits user selection of a timing source as an input to the variable-interval interrupt logic (input RVICK+) and to the free-running counter (input RFRCK+).

Four timing sources are available for selection:

1. Output of the clock counter logic (10 kHz)
2. External timing source (see table 1-4)
3. Output of the variable-interval interrupt logic
4. Line frequency (50 or 60 Hz as available. See table 1-4)

Timing source selection is accomplished by means of jumpers between "E"-points as shown in figure 4-21. Both standard and optional interconnection are indicated. Note that jumpering the variable-interval interrupt logic output (E16) to its input (E18) is not a useful connection.

The timing source logic derives the line frequency signal at logic levels by passing the 24V ac rms through a voltage divider/rectifier/filter circuit followed by a Schmitt trigger. The 24V ac rms is the power-turn-on relay control voltage from the mainframe power supply.

The timing source logic buffers the external timing source signal (ETR+) by means of a pair of inverters in series. ETR+ must be standard TTL compatible with durations as specified in table 1-4.

4.3.2.5 Variable Interval Logic

The variable interval logic generates an output at the variable-interval interrupt rate. This output (RVII+) is sent to the interrupt control logic to generate the OIURX+ interrupt request signal. Figures 4-22 and 4-23 show the variable-interval timing.

The variable interval logic can be divided into two functional subcircuits.

The first circuit consists of a 12-bit buffer register that can be programmed via the instruction decoder and control logic. The register consists of 12 D-type flip-flops loaded from the option bus (OB00– through OB11–) with a binary number proportional to the desired time interval. All 12 flip-flops are clocked by RDTO+ on the trailing edge of data ready (ODRYX+) during a data-transfer-out. The flip-flop outputs (RIR00– through RIR11–) are transferred to the 12-bit counter. The 12-bit register can be cleared by RRSTA–.

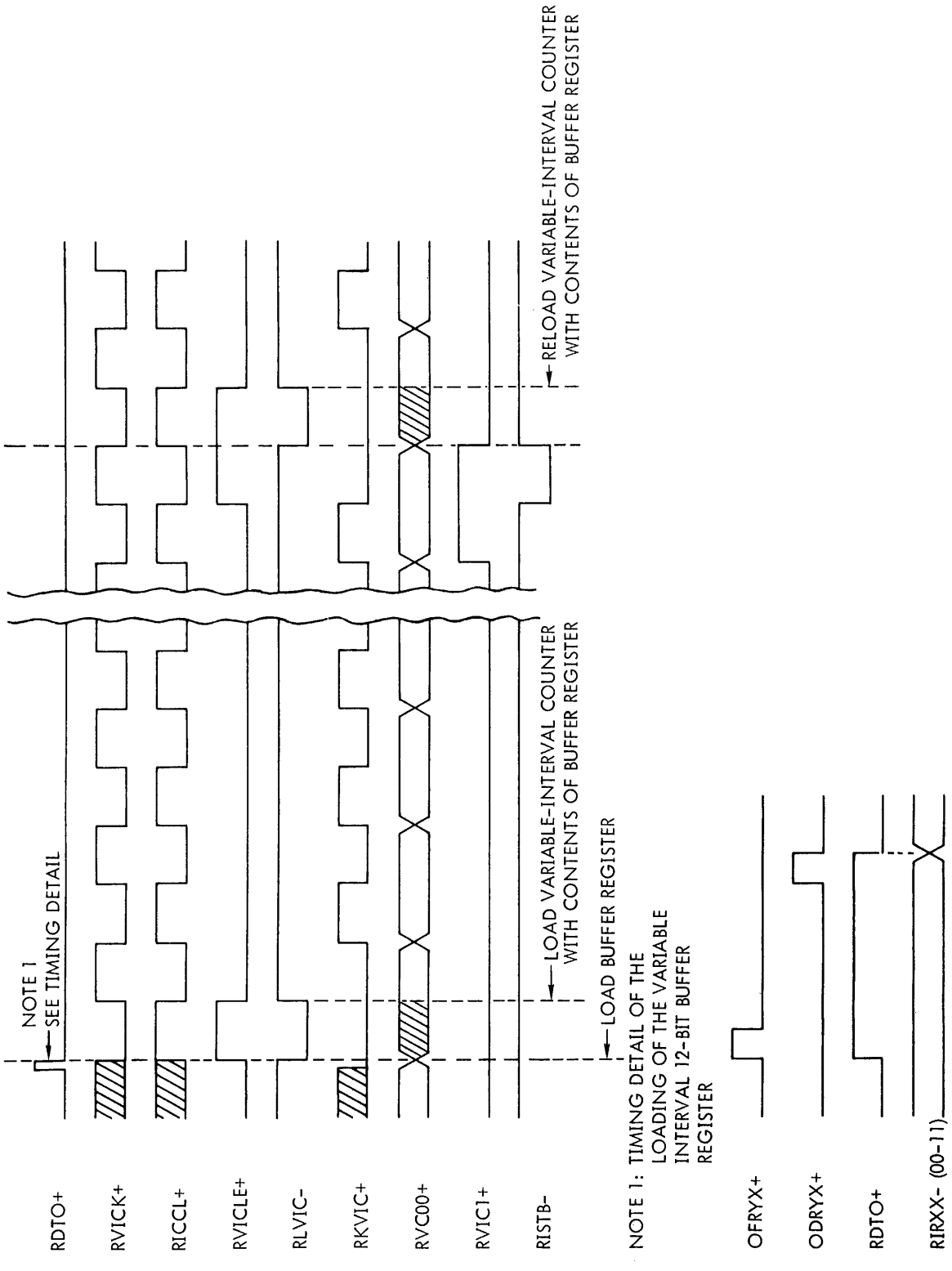

VTII-1582A

Figure 4-22. Variable Interval Counter and Load Buffer Timing

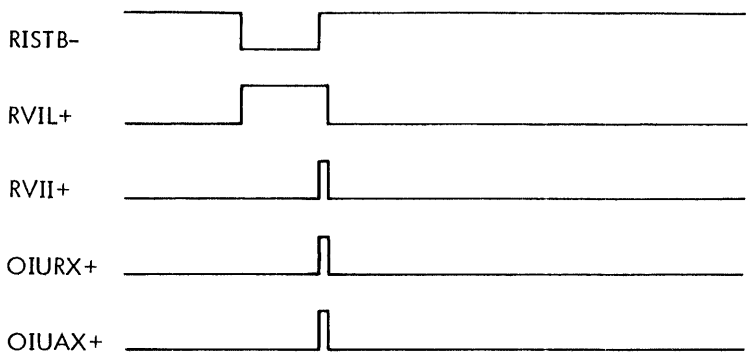

TIMING DETAIL:

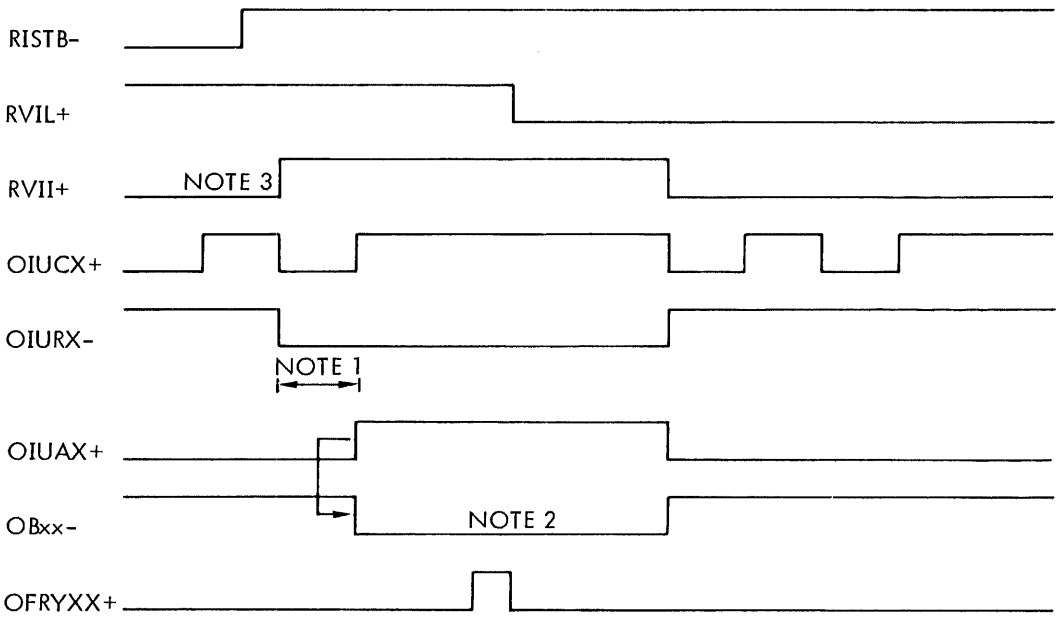

NOTE 1: THIS TIME FRAME IS VARIABLE DEPENDING ON WHEN THE REQUEST IS ACKNOWLEDGED.

NOTE 2: INTERRUPT ADDRESS

NOTE 3: IF THE VARIABLE INTERVAL INTERRUPT ENABLING FLIP/FLOP IS SET AND A MEMORY OVERFLOW INTERRUPT IS NOT PENDING RVII+ GOES HIGH.

VTII-1583

Figure 4-23. Variable-Interval Interrupt Timing

The second circuit consists of logic gates, flip-flops, and a 12-bit counter. RIR00– through RIR11– are transferred into the counter. The loading of the counter is sychronized with RVICK + so that the counter does not attempt to load and increment at the same time.

Note that if the 12-bit selection register is set to zero, the counter reacts as if the count were 4,096. When the counter reaches zero, it is again loaded and incremented.

The variable-interval interrupt continues to occur at a rate determined by the frequency source and the buffer register, until the contents of the buffer register are changed under program control.

The interrupt process is initiated by RISTB– setting RVIL every time the counter cycles, indicating a variable-interval interrupt is in process. RVII is then set, generating the variable-interval interrupt request when the variable-interval interrupt is enabled and the memory-overflow interrupt is not in process. RVIL can be cleared by OSYRT +, when the processor is transferring data out, or when the counter is initialized.

4.3.2.6 Memory Overflow Detection Logic

If an increment-memory-replace instruction is located at the variable-interval interrupt address (044), the memory overflow detection logic interrupts the processor when the contents of the incremented memory address overflow. Prior to incrementation, the contents of the memory address specified by the INR instruction in address 044 (typically address 045) are placed in the memory-input latch MILxx and the RTC memory overflow detection logic checks the 15th bit during the execution of an increment-memory-and-replace (INR) instruction. If this bit is set, indicating a count of 040000 or more, the RTC records an overflow condition.

The memory overflow detection logic consists of gates and flip-flops for generating the memory overflow interrupt request signal RMFI +. Flip-flop REMT sets while a variable-interval interrupt is being executed. The processor INR instruction signal CCS3D +, AK165 +, and REMT + combine to set test flip-flop RMTFF if the memory input latch bit 14 (MIL14A—) is set when overflow occurs. RMTFF— sets memory-overflow latch flip-flop RMFL. Memory-overflow interrupt flip-flop RMFI sets on the trailing edge of interrupt clock (OIUCX +) when RMFL is set and there is no variable-interval interrupt. RMFI + is sent to the interrupt control logic to generate an overflow interrupt.

4.3.2.7 Interrupt Control Logic

The interrupt control logic consists of the gates and flip-flops required to generate OIURX— and interrupt addresses, and to ensure RTC priority.

The priority output signal PRRTCO— is sent to lower-priority I/O devices to indicate that the RTC has seized interrupt priority. OIURX— is sent to the processor, along with DCPRM. RINT— low indicates that the interrupt request flip-flop is set and no higher-priority interrupt request is active. Either a variable-interval interrupt or memory-overflow interrupt request signal can then request the processor to execute an instruction.

Either the interrupt address 044 or 046 or the contents of the FRC counter may be placed on the option bus. When reading the FRC counter the contents of the counter are placed on the option bus. When an interrupt is being processed the interrupt address is placed on the option bus.

4.3.3 Programming

The user writes the RTC service routines using the RTC instructions in table 4-4. The RTC device address is 047. Interrupt addresses 044 and 045 process variable interval (increment) interrupts, and addresses 046 and 047 process overflow interrupts.

If the memory-overflow interrupt is used, 044 must be loaded with an increment-memory-and-replace instruction (i.e., INR, INRI, or INRE). If the memory-overflow interrupt is enabled, but not used, and address locations 044 and 045 do not contain an increment-memory-and-replace instruction, an erroneous memory-overflow interrupt may occur. Normally a jump-and-mark instruction to a suitable processing subroutine is loaded in the memory-overflow interrupt locations 046 and 047. However, if the overflow interrupt capability is not used and is masked, the variable-interval interrupt locations 044 and 045 should contain a jump-and-mark instruction.

Figure 4-24 shows a typical RTC service routine.

The RTC service routine concludes with enabling instructions for other internal computer options (e.g., priority interrupt modules) whose interrupt requests have been inhibited.

Table 4-4. RTC Instructions

Mnemonic	Code	Description
External Control		
EXC 047	0100047	Clear FRC (the FRC cannot otherwise be reset)
EXC 0147	0100147	Enable RTC interrupts (pending RTC interrupts are immediately processed)
EXC 0247	0100247	Inhibit memory overflow interrupts (inhibits only overflow interrupts)
EXC 0347	0100347	Enable variable interval interrupts (inhibits overflow interrupts)
EXC 0447	0100447	Initialize RTC (inhibits all interrupts and resets the interrupt control logic and clock control logic)
EXC 0647	0100647	Initialize variable interval counter (loads the contents of the interval selection register in the interval counter and resets the clock control)
EXC 0747	0100747	Inhibit variable interval interrupt
Transfer		
OAR 047	0103147	Output A register to interval selection register
OBR 047	0103247	Output B register to interval selection register
OME 047*	0103047	Output memory to interval selection register
INA 047	0102147	Input FRC contents to A register
INB 047	0102247	Input FRC contents to B register
IME 047	0102047	Input FRC contents to memory
CIA 047	0102547	Clear and input FRC contents to A register
CIB 047	0102647	Clear and input FRC contents to B register

```
                    ***RTC INITIALIZATION CODING ***

                SET INTV = 1000 (interrupts to occur once each
                                 second)
                SET INSC = 10 (variable interval interrupts, 1 per
                                 million)

INTV      EQU     1000
          ORG     044           INITIALIZE ADDRESSES 044-047
          INR     PERIOD
PERIOD    DATA    040001—INTV
          JMPM    TIMUP

                    ***INITIALIZE RTC***

          ORG     0500
INSK      DATA    INSC          INTERVAL SELECT COUNT
BEGIN     EXC     0447          INITIALIZE RTC
          EXC     047           Clear FRC
          LDA     INSK
          OAR     047           OUTPUT INT SEL COUNT
          EXC     0147          ENABLE RTC

              (USER'S PROGRAM)

                    ***INTERRUPT PROCESSOR***

          ORG     01000
TIMUP     ENTR                  PROGRAM COUNTER STORED
          EXC     0247          INHIBIT MOI
          STA     SAVEA         SAVE A REGISTER CONTENTS
          LDAI    040001—INTV   REINITIALIZE RTC COUNTER
          STA     PERIOD

          (Other instructions can be inserted here)

          LDAI    0             RESTORE A REG
SAVEA     BES     0
          EXC     0147          ENABLE MOI
          JMP*    TIMUP         RETURN TO INTERRUPT
          END
```

Figure 4-24. Typical RTC Service Routine (in symbolic coding form)

4.4 MEMORY PROTECTION

The **memory protection (MP)** option consists of the sections shown in the block diagram (figure 4-25) and described below.

The **address sequencer** checks for program entry into non-protected memory segments, controls loading of the instruction address register, checks for jumps and overflow from non-protected to protected memory segments, and checks for write to protected memory segments from a program originating in non-protected segments.

The **instruction sequencer** checks for loading of the program counter for a possible jump error and checks for input/output and halt instructions originating in a program residing in a non-protected memory segment.

The **mask register section** (figures 4-26 and 4-27) stores the protected/unprotected status of each 512-word segment of core memory. If a given flip-flop in the mask register is set, the corresponding segment of core memory is protected. If the flip-flop is reset, that memory segment is unprotected. The mask register section consists of eight 16-bit mask registers. To load a register, the register is

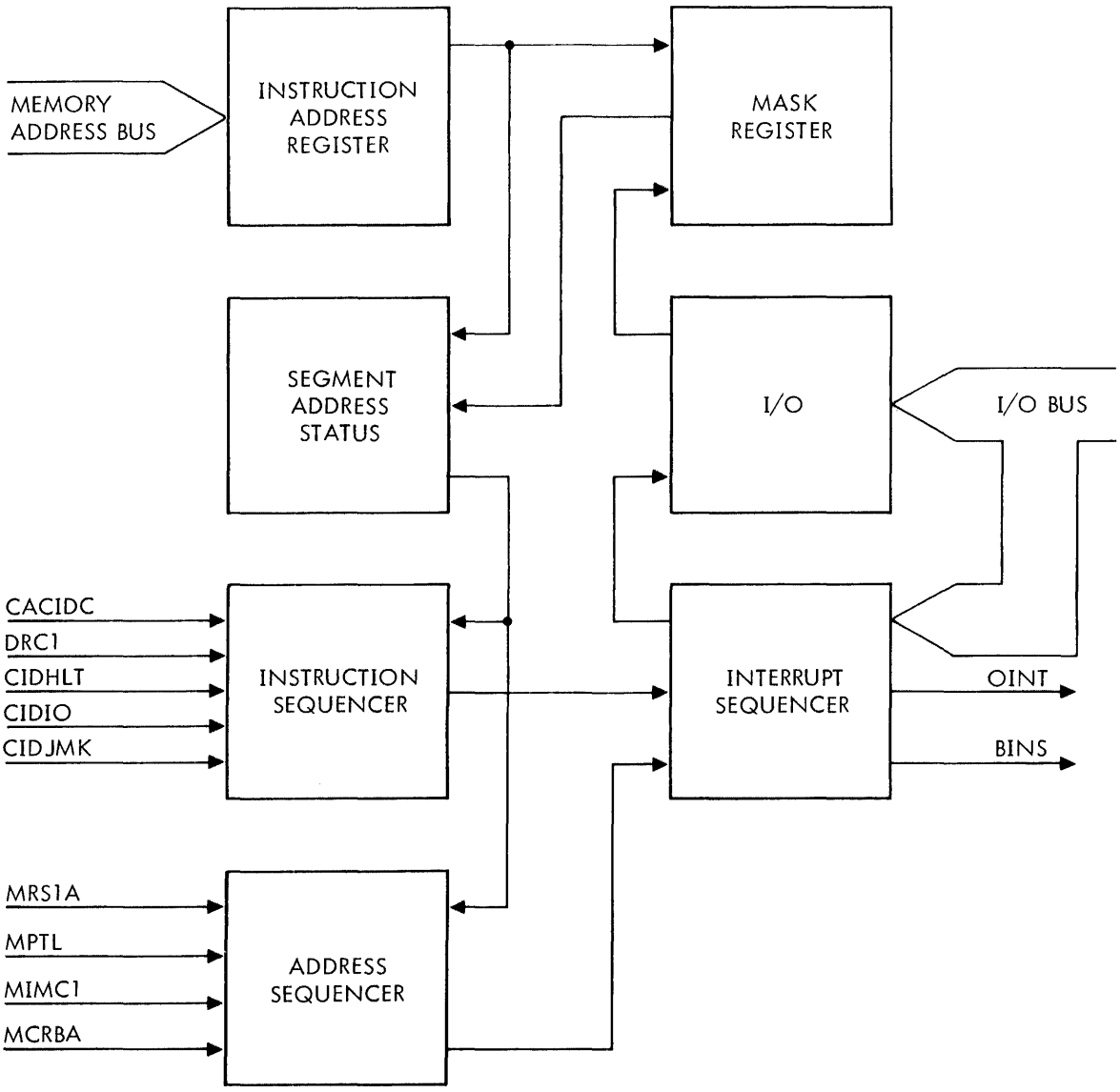

Figure 4-25. MP Block Diagram

selected by an EXC instruction and a data-transfer-out instruction is issued to transfer 16 bits of data to the selected register via the I/O bus. During error detection, the outputs of the correct mask register are selected by the upper three bits of the address and are gated out to the segment address status section.

The **segment-address status section** decodes bits 09 through 12 of the address and ANDs the result with corresponding status outputs of the mask register to determine whether or not the addressed segment is protected. The status of the addressed segment is then gated out to the address sequencer as the status of the current word.

The **instruction address register** stores the contents of the processor program counter at the beginning of each instruction-fetch memory cycle. The register is updated on each such cycle until an MP error is detected. It is then disabled by the resulting error interrupt. Further updating is thus inhibited until the MP is reenabled by an I/O instruction during the error subroutine.

The **interrupt sequencer** raises an interrupt request to the processor when any MP error condition is detected. The interrupt sequencer disables all lower-priority devices until its interrupt request is raised. During an interrupt, the interrupt sequencer aborts any I/O commands just started, restarts the CPU in the event of an unprotected halt instruction, and forces the CPU to wait for the pending I/O interrupt.

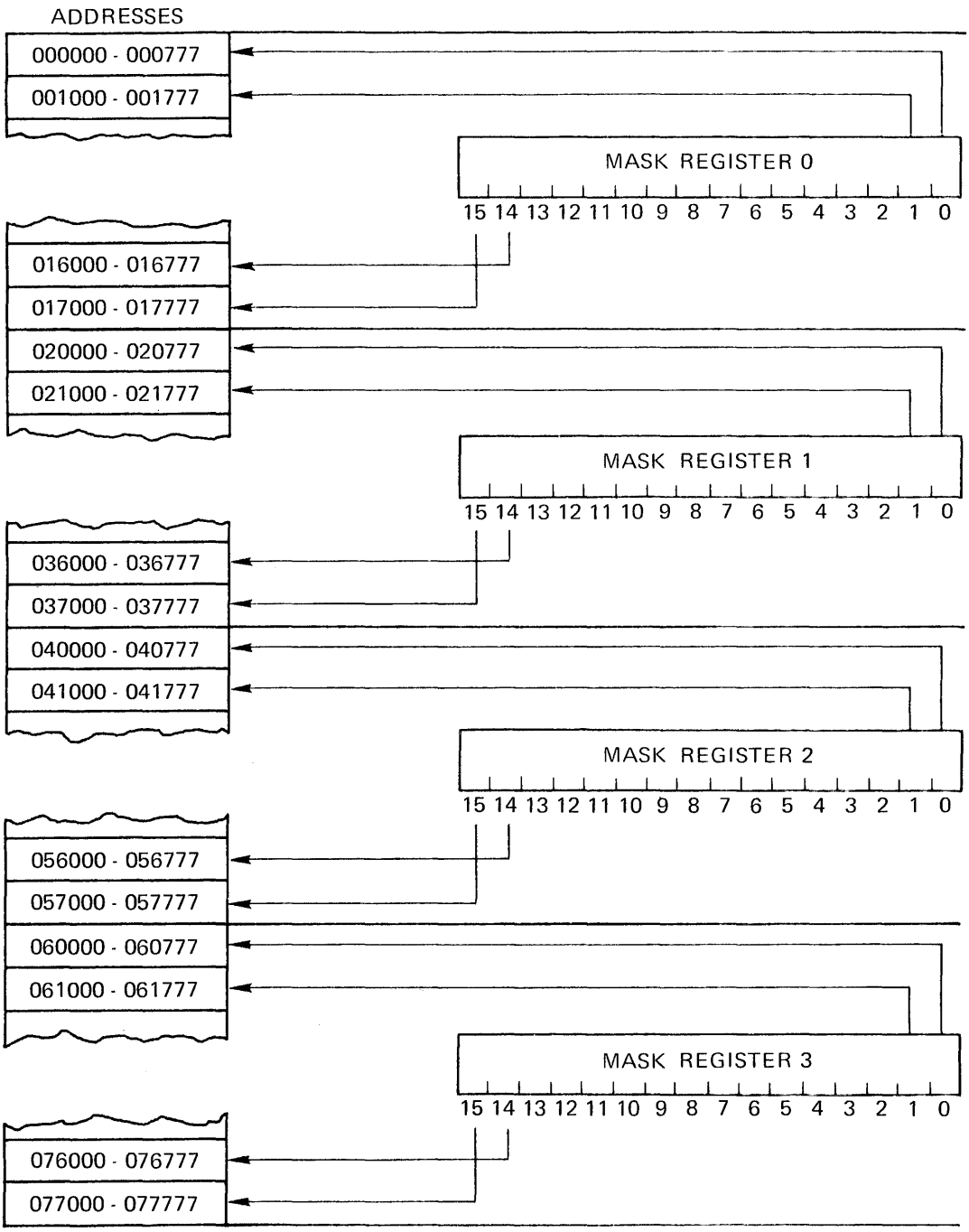

VTII-0237B

Figure 4-26. Mask Register Bit Assignment

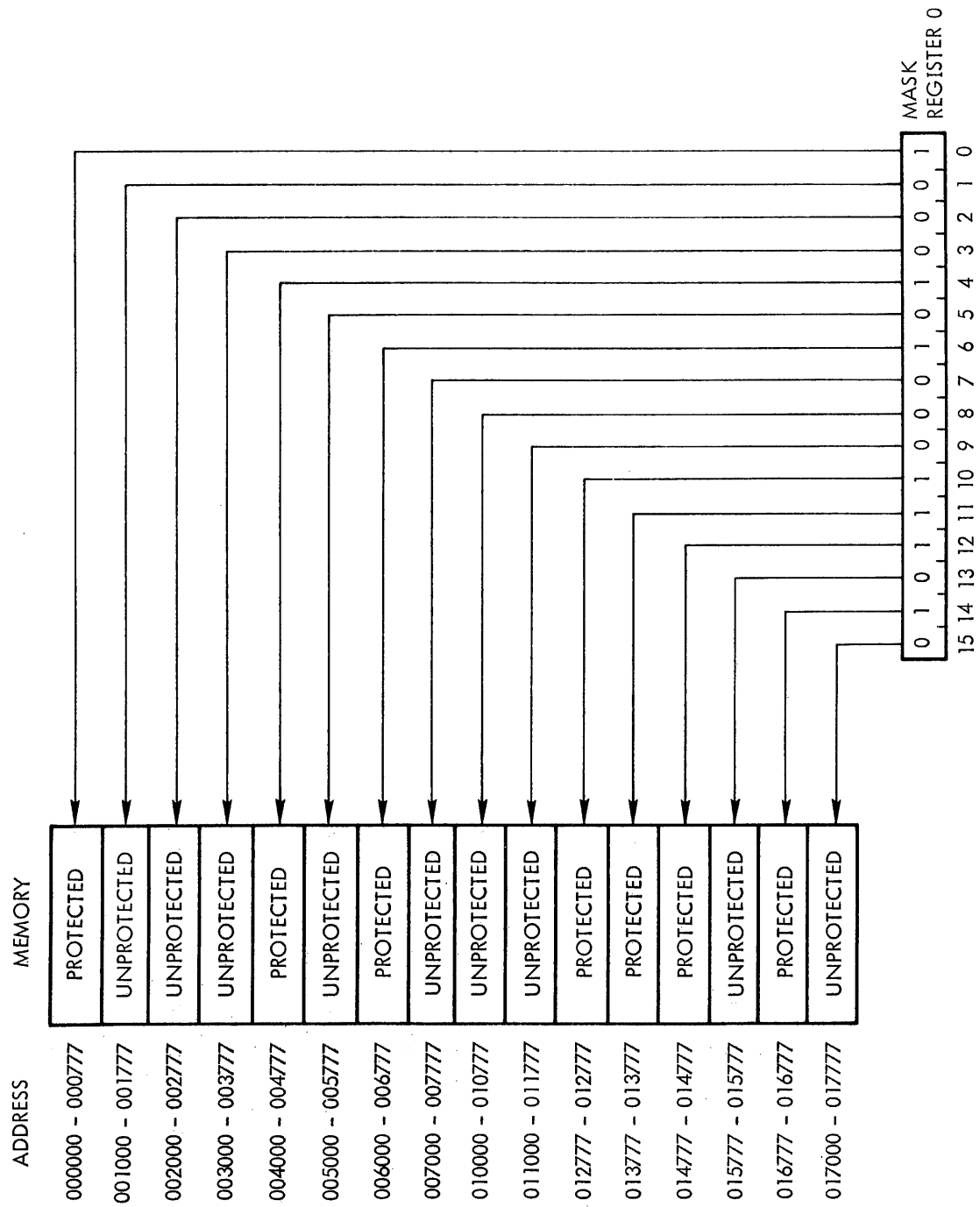

VTII-1149

Figure 4-27. Memory Assignment Example

The **input/output section** decodes the device address, and controls data transfers to the mask register and from the instruction-address register. The I/O section also gates the interrupt address on the I/O bus.

4.4.1 Error Sequences

The MP prevents: (1) modification of the contents of protected areas of memory by instructions in unprotected areas, (2) program entry into protected areas of memory while executing programs in unprotected areas, and (3) loss of computer control by protected-area programs to unprotected-area programs. Any attempt to accomplish one or more of these conditions is detected as an **MP error condition.** Tables 4–5 and 4–6 show the MP error conditions possible under various circumstances.

An instruction is a **protected instruction**, if the first (or only) word is in a protected area of memory. By definition, no MP error conditions can exist during the execution of such an instruction, nor can they exist during the execution of an instruction in a protected area that indirectly references an unprotected address.

Since the application of pipelining techniques makes it impossible to associate directly the address status with the instruction being decoded, two flip-flops (BANPT, and BINPT) keep track of address status for later use in error-checking. BANPT sets when an instruction from an unprotected memory address is placed in the instruction register. BINPT sets when an instruction is decoded while BANPT is set.

HALT ERROR: This condition exists when a HLT instruction is attempted from an unprotected area, or when a HLT is attempted from any area via an execution instruction located in an unprotected area. (However, an execution instruction in a protected area can execute a HLT located in any area.) Upon detection of a halt error, the HLT completes, the CPU is interrupted to 020, and halts after fetching the instruction at this address. The error detection causes the MP to hold its start signal (OINT—) true until completion of the interrupt. Thus, the CPU immediately reenters RUN mode after halting. *NOTE:* A manual halt using the STEP switch on the control panel cannot be detected by the MP.

OVERFLOW ERROR: This condition exists when a single word instruction, or either word of a two word instruction, is in the last location of an unprotected area and the first word of the next instruction lies in sequence in the next area, which is protected. (Note that, when the last location of an unprotected area contains the *second* word of a jump, indexed jump, jump-and-mark, jump-and-set return, or bit-test instruction for which the jump condition is met, an overflow error condition does not exist. When an overflow error is detected, the last instruction in the unprotected area completes, the next instruction in sequence is not executed, and the processor is interrupted to 030.

I/O ERROR: This condition exists when a single-word I/O instruction, or the first word of a double-word I/O instruction, is in an unprotected area, or if execution of an I/O instruction located in any area is attempted via an execution instruction located in unprotected area. (However, an execution instruction in a protected area can execute an I/O instruction located in any area). When an I/O error is detected, the I/O instruction in process completes. However, in all such cases I/O control commands and data transfers between the processor and peripheral controllers are inhibited. Thus, the contents of memory and of registers A, B, and X remain unmodified by the I/O instruction. This is accomplished by holding OINT— true. Upon completion of the instruction the processor is interrupted to 022.

WRITING ERROR: This condition applies only to instructions that write into memory (operand storage instructions) and is defined as existing when an instruction attempts to write into a protected area, and either the single word instruction, or the first word of a double word instruction, is in an unprotected area, or the instruction attempting to write is being executed as a result of an execution instruction in an unprotected area. (However, an execution instruction in a protected area can execute a writing instruction in any area.)

For an immediate instruction a writing error exists only when the first word is in an unprotected area, and the second word is in a protected area.

All operand store instructions end with an operand-storage cycle, during which writing errors can be detected. All memory cycles addressing protected memory from unprotected memory will be changed unconditionally to reading cycles. To change a writing cycle to a reading cycle, the read/write (MWLY– MWRY–) inputs to the memory are pulled down to nearly 0V.

When a write error is detected, the instruction in process completes. However, the writing cycle is changed to a reading cycle to prevent modification of memory. The contents of registers A, B, and X remain unaffected. Upon completion of the instruction the processor is interrupted to 024.

JUMP ERROR: This condition applies only to a jump, indexed-jump, jump-and-mark, jump-and-set return, bit-test, or skip-on-register-equal instructions, and exists when an attempt is made to jump or skip to a protected area and the first word of the instruction lies in an unprotected area.

The jump, indexed-jump, jump-and-set-return, and bit-test instructions each ends in an addressing cycle, and the skip-on-registers-equal (SRE) instruction ends in a special skip cycle. The final (effective) address is not available until the final address is on the memory bus during the first memory cycle following the jump address cycle.

For the conditional jump instructions in the case where the jump condition is not met, a jump error cannot occur. However, an overflow error may still occur for this case.

When a jump error is detected, the instruction in process completes. However, in the case of a jump-and-mark instruction, the writing cycle is changed to a reading cycle to prevent modification of memory. The contents of registers A, B, and X remain unaffected. The processor is interrupted to 026. Upon completion of the instruction.

Table 4-5. MP Error Conditions Possible During Single Word Instructions in Unprotected Area

	Error Conditions Possible If:			
	Instruction is in unprotected area but not in last unprotected address.		Instruction is in last address of unprotected area. Next segment is protected.	
Single-Word Instruction	**Always possible**	**Under certain conditions**	**Always possible**	**Under certain conditions**
Halt (HLT)	H	--	H	--
I/O	I	--	I,O	--
Other Non-addressing	--	--	O	--
Addressing (Read)	--	--	O	--
Addressing (Write or INR)	--	W	O	W

H = Halt error
O = Overflow error
W = Writing error
I = I/O error
-- = None

Table 4-6. MP Error Conditions Possible During Double Word Instructions in Unprotected Area

	Error Conditions Possible If:					
	Both words are in unprotected area but neither is in the last address.		First word is in the last address of an unprotected area and the next area is protected		Second word is in the last address of an unprotected area and the next area is unprotected.	
Double-Word Instruction	**Always possible**	**Under certain conditions**	**Always possible**	**Under certain conditions**	**Always possible**	**Under certain conditions**
I/O	I	--	I,O	--	I,O	--
Extended (Read)	--	--	O	--	O	--
Extended (Write or INRE)	--	W	O	W	O	W

(continued)

Table 4-6. MP Error Conditions Possible During Double Word Instructions in Unprotected Area *(continued)*

Double-Word Instruction	Always possible	Under certain conditions	Always possible	Under certain conditions	Always possible	Under certain conditions
Immediate (Read)	--	--	O	--	O	--
Immediate (Write or INRI)	--	--	O,W	--	O	--
Execution (condition met)	--	H,I (not simultaneously)	O	--	--	H or O,I
Execution (condition mot met)	--	--	O	--	O	--
Jump, Jump-and-Mark, Indexed Jump, Jump-and-Set-Return, or Bit Test (condition met)	--	J	O	J	--	J
Jump, Jump-and-Mark, or Bit Test (condition not met)	--	--	O	--	O	--
Skip on Registers Equal (condition met)	--	J	J,O	--	J	--
Skip on Registers Equal (condition not met)	--	--	O	--	O	--

H = Halt error
O = Overflow error
I = I/O error
W = Writing error

4.4.2 Circuit Description

To better understand the function of the MP circuits described in this section, refer to the error sequences (section 4.4.1), programming considerations (section 4.4.3), mnemonics (section 6), and logic diagram 91B0401 (system documentation package).

The **mask register** flip-flops store the protected/unprotected status of each 512-word segment of memory. If a flip-flop is set, the corresponding memory segment is protected. A memory segment is unprotected when the corresponding mask-register flip-flop is reset (figures 4-26 and 4-27).

There are four 16-bit mask registers. An external control instruction selects the register to be loaded. A data-transfer-out instruction then transfers 16 bits of data to the selected register via the option bus (OB00 through OB15). *NOTE: The mask register cannot be read back to the processor.*

The **segment-address status logic** decodes memory address bus bits 9 through 12 (MYA09X— through MYA12X—), and then ANDs the result with the mask-register outputs (BMR00 + through BMR15 +) selected in the mask register by the highest-order three bits (MYA13X— through MYA15X—) of the address. The ANDing results in BSPRO ±, which, if true, indicates that the selected memory segment is protected. BSPRO ± goes to the address sequencer.

The **instruction-address register** stores the memory-address bus bits (MYA00 + through MYA15 +) on the negative transition of the address-not-protected signal (BKIAR−) and outputs the result (BIA00 + through BIA15 +) to the I/O bus drivers.

4.4.3 Programming

Use of the MP presumes the existence of a protected-area executive program to control the assignment of memory areas. The interrupt addresses and error subroutines also reside in protected areas. Thus, the first segment of the main memory (000 through 777) is normally protected, since it contains the address specified by the interrupts.

All interrupt, DMA, and PMA operations are independent of the program. Therefore, none of these operations have originated directly from a protected or an unprotected memory area. However, all I/O operations are initiated by the executive program, which resides in a protected area. For this reason, interrupt, DMA, and PMA operations originate from a protected area and are not restricted by the MP. The executive program ensures that the memory access from these three sources is to the proper address.

Detection of a jump error is inhibited during an interrupt operation. This allows a jump to a subroutine in a protected area when an interrupt occurs while executing a program in an unprotected area.

INTERRUPT INHIBITION: The standard computer without MP does not recognize interrupts following the execution of any:

a. Halt

b. Shift instruction

c. I/O instruction

d. Double-word instruction

e. Multiplication instruction

f. Division instruction

g. Instruction executed in STEP mode

With MP, interrupts are recognized immediately following all instructions except:

a. Halt (HLT)

b. Any external control (EXC) I/O instruction

c. Any execution instruction (i.e. interrupts will not be recognized between an execution instruction and the instruction executed by that instruction if the condition is met, nor between the execute instruction and the instruction following in sequence if the condition is not met).

d. Any instruction executed in STEP mode.

NOTE: Error interrupts from the MP are not inhibited by any of the above.

STEP MODE: The MP can detect any error condition while the program is being stepped through by the operator from the control panel. If an error interrupt occurs during one manual step the resulting interrupt subroutine will be entered during the following manual step.

MEMORY WRAP-AROUND: The computer has a wrap-around capability to address zero when the memory size is 4K, 8K, 16K or 32K. (For other memory sizes, the CPU attempts to read from non-existent memory when the memory size is exceeded). The MP does not have this wrap around capability. However, it is not normally desirable to attempt to jump to or write into locations in non-existent memory. Therefore, all memory segments whose addresses exceed the existing memory size should be designated as protected. In this way, any jump, overflow, or store from unprotected area to non-existent memory is detected as an error. It is assumed that programs in protected area are totally debugged, and thus that no attempt to enter or write into non-existent memory will be made from a protected area.

PRIORITY: The MP has the highest priority position in the external-device priority chain of the system. Thus, when the MP is present, the power failure/restart (PF/R) (if also present) has second priority. This covers the case where MP error interrupt request and a PF/R request occur simultaneously. With the MP having highest priority, the processor is interrupted first to the MP error subroutine only to be immediately interrupted out to the power-down subroutine. No further testing of subroutines can occur since the PF/R retains priority throughout the power-down subroutine. When power is restored, the processor returns to the MP error subroutine after execution of the power-up subroutine. Had the priorities of the two options been reversed, the MP error subroutine would not have been entered, and the CPU would have no valid location to which to return since during power-up the error interrupt would be lost and the program being executed contains an " error"

ERROR INTERRUPT ADDRESSES: The interrupt addresses assigned to MP error interrupts are listed in table 4-7

Table 4-7. Interrupt Addresses for MP Errors

Error	Interrupt Address
HALT	020
OVERFLOW	030
I/O	022
WRITING	024
JUMP	026

OPERATION IN PROTECTED AREA: When leaving a protected area to enter an unprotected area, the next-to-last location (i.e. the one preceding the jump-type instruction)of the exit subroutine must be an enable-MP instruction. If the unprotected area is entered by "overflowing" from the protected area, the last instruction in the protected area must be an enable-MP instruction.

I/O INSTRUCTIONS: The I/O instructions for programmed communication between the MP and the CPU are listed in table 4-8.

I/O FUNCTIONS: To load one of the four 16-bit mask registers, first select the register using the proper select-mask-register external-control instruction. Any one of the three available data-transfer-out instructions can then be issued to load the mask register. *NOTE:* The MP need not be enabled to load a mask register.

MP error detection is enabled by the enable-MP external-control instruction. Detection is disabled by the disable-MP instruction, by CPU acknowledgment of an MP error interrupt, or a true system-reset signal from the control panel or power supply.

The enabled status of the MP is lost when power fails. When power is restored the MP is automatically disabled by system reset from the power supply. The contents of the mask registers are reinstated prior to reenabling the MP.

The address (plus 1) of the instruction during which the error was detected can be transferred to the processor using any one of the five data-transfer instructions. This capability is provided for use during the error subroutines.

One means of returning to the executive program in a protected area upon completion of the program being executed in an unprotected area is to program a jump to a previously assigned address in the protected area. This creates an MP-error condition. The jump error subroutine then allows the jump to occur upon recognition of the special jump address.

4.5 MEMORY PARITY

The three main blocks of the memory parity option (PARITY) are the parity generator/checker, control logic, and interrupt logic (figure 4-28). Inputs to PARITY include the memory data bus, memory writing-control lines, memory-completed line, and I/O bus signals.

4.5.1 Circuit Description

To better understand the memory parity circuits described in this section, refer to the block diagram in figure 4-28, logic diagram 91B0401 (system documentation package, and the mnemonics list (section 6).

The **parity generator/checker** checks odd parity in an output (read) sequence and generates odd parity in an input (write) sequence. During input, MWRY+ and MWLY+ are high. The ninth bits, (EINR+, EINL+) into the parity generator/checkers are high, and if all of the memory bus data bits (MYD00– through MYD15–) are high, there are high outputs EWRPR+ and EWLPR+. These high outputs generate parity for right and left bytes to memory on lines MYD16– (low) and MYD17– (low), respectively. During output, MWRY+ and MWLY+ are low. Either EINR+ or EINL+ can be high or low, depending upon the previous states of MYYD16– and MYD17–. If MYD16– produces an even number of lows on the parity generator/checker input, then EWRPR+ is high and there is no output parity error on the right byte.

Table 4-8. MP I/O Instructions

Instruction Type	Octal Code	Function	
External Control	100045	Select mask register 0	
	100145	Select mask register 1	
	100245	Select mask register 2	
	100345	Select mask register 3	
	100645	Enable memory protection	
	100745	Disable memory protection	
Data Transfer	102545	Clear and input to A register	From Instruction Address Register
	102645	Clear and input to B register	
	102145	Input to A register	
	102245	Input to B register	
	102045	Input to memory	
	103145	Output from A register	To Mask Register
	103245	Output from B register	
	103045	Output from memory	
Sense	------	None	

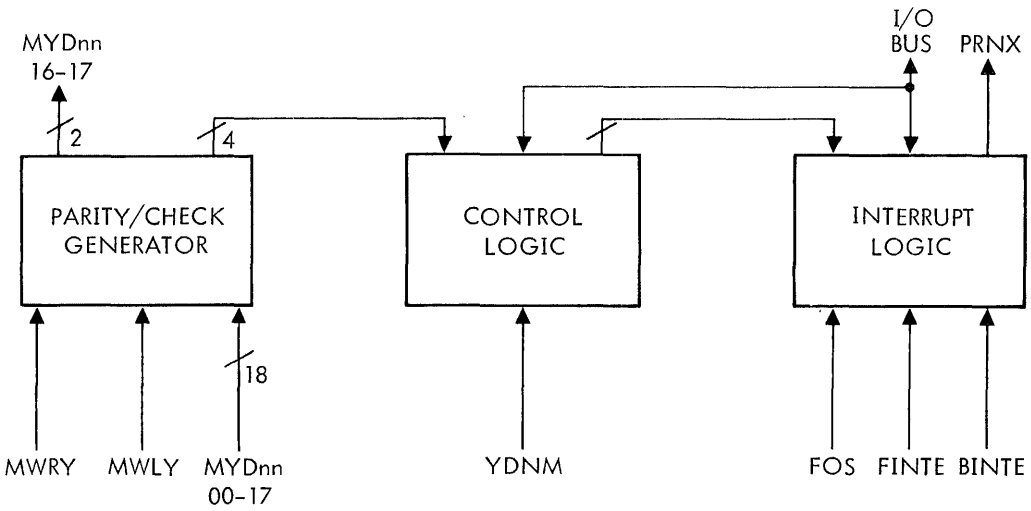

Figure 4-28. Parity Option

Analogous arguments apply to a parity check of the left byte. In either case, if there is an odd number of lows on the parity generator/checker input, EWRPR+ and/or EWLPR+ goes low, depending on the byte, to produce an output parity error.

The **control logic** contains the parity-enabling flip-flop and controls error detection. If there is a parity error on either the right byte (EWRPR+ low) or left byte (EWLPR+ low), the parity-error flip-flop set input goes high. The high-to-low transition of the delayed clock pulse (EKRDD−) sets the parity error flip-flop signal ERER+ high to flag the parity error. There is a delay line between EKRD− and EKRDD− to permit parity ripple through the parity tree. The clock-enabling pulse is generated when there is no PMA operation (MAKO− high). A check on the left and right bytes is activated (ERDR+ and ERDL+ high), and memory acknowledgment (YDNME+) is high. Then, when the memory pulse YDNME+ goes low, EKRD− goes low to clock the parity-error flip-flop. A direct reset of the parity-error flip-flop is activated by ERERR− going low.

The **interrupt logic** controls the interrupt cycle and activates the device and interrupt address logic. When a parity error is generated (ERER+ high), the parity-interrupt flip-flop set output signal EINT+ goes high on the high-to-low transition of the interrupt clock (OIUCX+). If both the higher-priority interrupts (PF/R and memory protection) are inactive (FINTE− and BINTE− high), a parity-interrupt request (OIURX− low) is gated onto the option bus. When the processor returns the interrupt acknowledgment signal OIUAX+ high, the parity-interrupt address (EAD03− through EAD07−) is gated out through the option bus and then onto the I/O bus to the processor (the particular interrupt address is predetermined by jumpers. At this same time, set-input signal EIODS+ goes high to enable the last part of the interrupt cycle on the positive edge of interrupt-address clock signal OFRYX+. When clocked, reset output EIOD− goes low to reset the parity-error flip-flop (ERERR− low) and turn off the parity-interrupt request (OIURX− high). Set output EIOD+ resets the parity-interrupt flip-flop. With the return of the high-to-low transition of interrupt clock OIUCX+, EINT+ goes low to DC reset the EIOD flip-flop. The memory-parity priority is established 500 microseconds after the power-up sequence is completed (FOS− high), provided EINB+ is high (no PF/R or memory protection active), the parity interrupt flip-flop is not set (EINT− high). This makes PRNE− low, which signals priority to the processor via the I/O bus. PRNE− can be jumpered to any one of the priority lines PR1X−I through PR9X−I. The memory-parity device address is decoded from BFAD+, OB08−, OB11−, and OB07− to produce parity-enabling interrupt clock EKENB+. When OB06− is high, the positive edge of EKENB+ clocks the reset output (EENB+) of the decoding flip-flop low, and this resets the parity-error flip-flop. PARITY can be hardware-disabled by tying E39 to E40 with a soldered wire jumper for easy maintenance.

NOTE: Parity is generated and checked *only* on the bus connected to the processor. It is not possible to perform this function on both buses.

4.5.2 Programming

The device address for PARITY is 045. There are two external control instructions that enable (0445) and disable (0545) parity. Parity is generated and checked, but an interrupt is not generated if PARITY is disabled.

The interrupt address is patch-selectable over the range 00000 through 00370, modulo 010.

4.6 PRIORITY MEMORY ACCESS

The PMA is divided into functional circuits: control, priority, data transfer, data drivers, input data receivers, and address receivers. It operates in a 620-compatible mode.

The control logic determines priority for the four input channels, provides enabling signals to the other functional blocks, full-interlock control of the four input channels, and control signal interface with the memory access logic.

The priority logic assigns priority to the four PMA channels on a hardware basis and controls the channel-acknowledgment lines. Channel one has the highest priority and channel four the lowest. The priority logic constantly monitors the four channels. When a request is received, priority is established and the proper acknowledgment line is enabled. The priority logic checks priority when ACKEN+ is received from the data transfer logic. This allows a higher priority channel request between each PMA memory cycle even if a lower priority channel is requesting consecutive memory cycles. If a higher priority channel leaves its request enabled, all lower priority channels are locked out.

The data transfer logic controls the flow of data through the PMA.

The eighteen data drivers and eighteen input data receivers provide the gating and interface between the data buffer (DBxx) and the PMA 16-bit bidirectional data bus (PDxx+).

The eighteen address buffers (ABxx) provide gating and interface between the memory address bus (MYAxx) and the PMA address bus (PAxx). The most significant and least significant bits of the PMA data and address buses correspond to the most significant and least significant bits of the memory data and address buses, respectively.

4.6.1 PMA Option/Controller Interface

The four PMA option channels share the 20-bit address bus, 18-bit bidirectional data bus, and the READ, SYRT—P, PMRS, and GO lines. Each channel has its own request (REQx—) and acknowledgment (ACKx—) lines.

The PMA controller provides interfacing synchronization between the I/O device and the PMA. The controller provides buffering to prevent memory rate reduction. If program-initiated block data-transfers are desired, the PMA controller can also interface with the external I/O bus. In this instance, the PMA controller is sent an initial address and block length via the I/O bus. The controller interrupts the program when the block transfer is completed.

Figure 4-29 shows typical control-line-out circuitry, 4-30 bidirectional bus circuitry, and 4-31 address-or control-line-in circuitry.

No more than eight controllers can tie onto the PMA option. They can be distributed among the four channels in any manner.

Maximum cable length is 20 feet (6 meters). The cable typically is a pair of 40-conductor flat ribbon cables. Termination resistors are mounted on the PMA option board. On the last controller there is a termination shoe at the end of the cable.

4.6.2 Timing

The timing for PMA output (reading) and input (writing) is explained in this section.

PMA output (Reading): In a reading operation (figure 4-32), when a request (REQx—) from a controller is received, priority is first established. The PMA can operate with the exclusive use of a memory port, in which case memory priority is absolute and immediate. This mode is hardwired in by a jumper from E89 to E90 that grounds ACKJ—. The PMA can also share a memory port, in which case PMA sends ORQM+ to the processor requesting memory access. When the acknowledgment (MAKO+) is received, the port will be free for the PMA on the following cycle.

The PMA then sets the proper PMA acknowledgment (ACKx—) and sends a PMA memory-request (ORQM—). The PMA controller gates the memory address (PAxx+) onto the PMA address bus, and makes READ— true and enables GO—. The PMA waits for GO— and the memory access logic to respond with the memory acknowledgment signal. Then the read flip-flop (AREAD), memory-address buffer (MYABxx+), and memory-port request (MRQY—) are put on the memory bus to await the memory-complete (YDNM—). YDNM— resets ACKx—, removes the PMA address from the memory bus, and resets the PMA memory-request if there are no other requests. Then YDNM— gates the memory output data to the PMA buffer (DBxx) and sends the data in the data buffer to the PMA data bus (PDxx+). The trailing edge of ACKx— tells the PMA controller that the data on the PMA bidirectional bus (PDxx+) are stable for at least 75 nanoseconds. Except when using the continuous-request (HOG) line, the controller removes all signals from the PMA option interface (including GO—) when ACKx— goes false.

PMA Input (Writing): A PMA writing operation (figure 4-33) is similar to reading. However, the PMA option output data is not gated to the PMA bus (PDxx) and READ- remains false. Input data to memory are gated onto the PMA bidirectional bus (PDxx-) when the address is gated onto the PMA address bus (MYABxx+). The PMA, in turn, gates the data into the data buffer (DBxx) when the memory address is gated into the address buffer (ABxx). The return of YDNM+ from memory completes the operation.

PMA Continuous-Request (HOG) Line: When a PMA controller is requesting consecutive memory cycles, its request line (REQx—) remains true. The basic sequence remains unchanged, including the determination of priority preceding each cycle. After the previous acknowledgment has cleared, the PMA responds in 165 nanoseconds with another ACKx— if the request line remains true and no higher priority device is active. By delaying GO— after ACKx— is received, the memory cycling is synchronized to controller demand. Normally, during the delay between ACKx— and GO—, the determination of PMA channel priority requests is suspended. The controller can force memory to appear busy on port A by activating the continuous-request line (HOG—). Priority now stays with port B even if it is idle. This reduces PMA latency times.

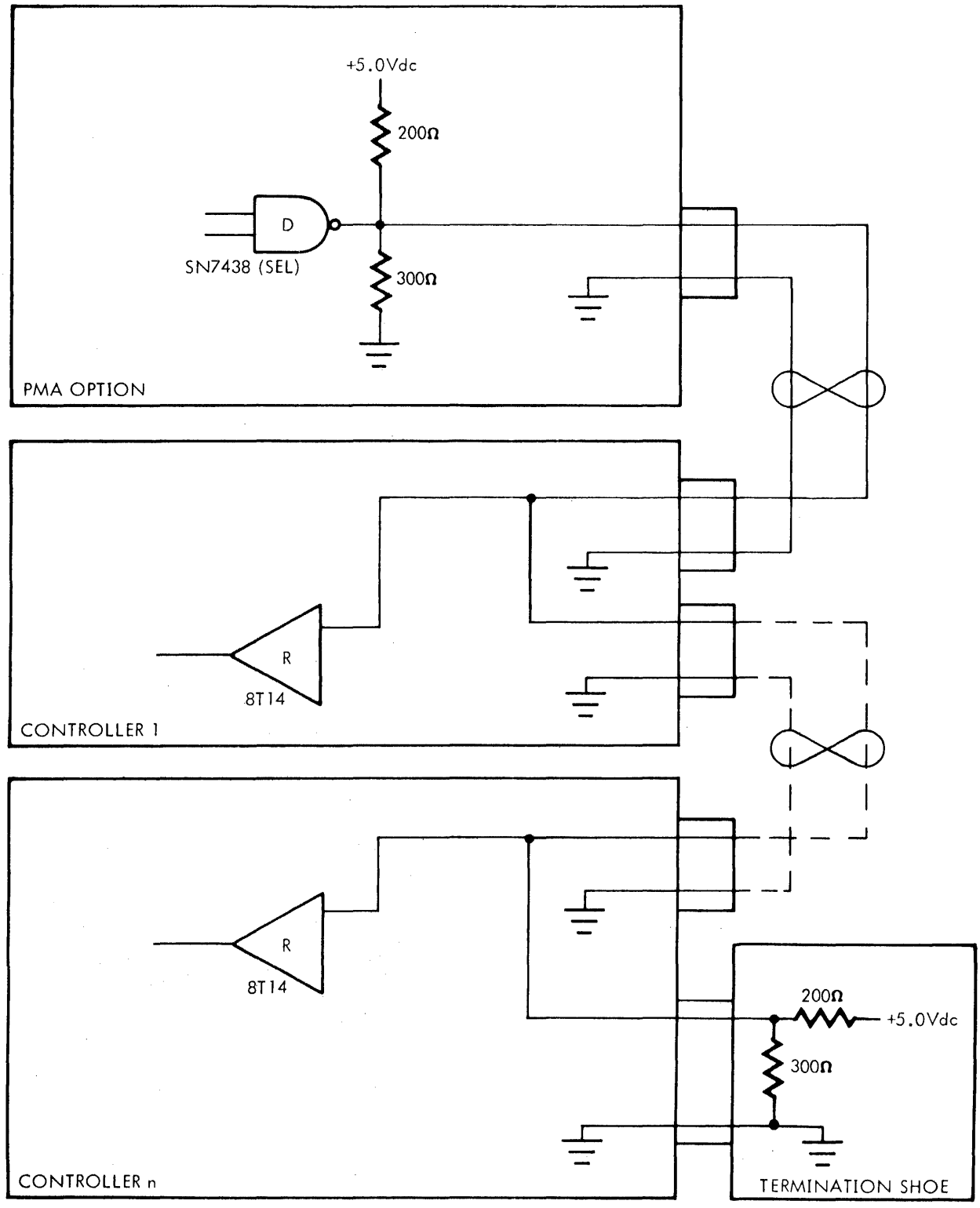

VTII-1594A

Figure 4-29. Typical PMA Control-Line-Out

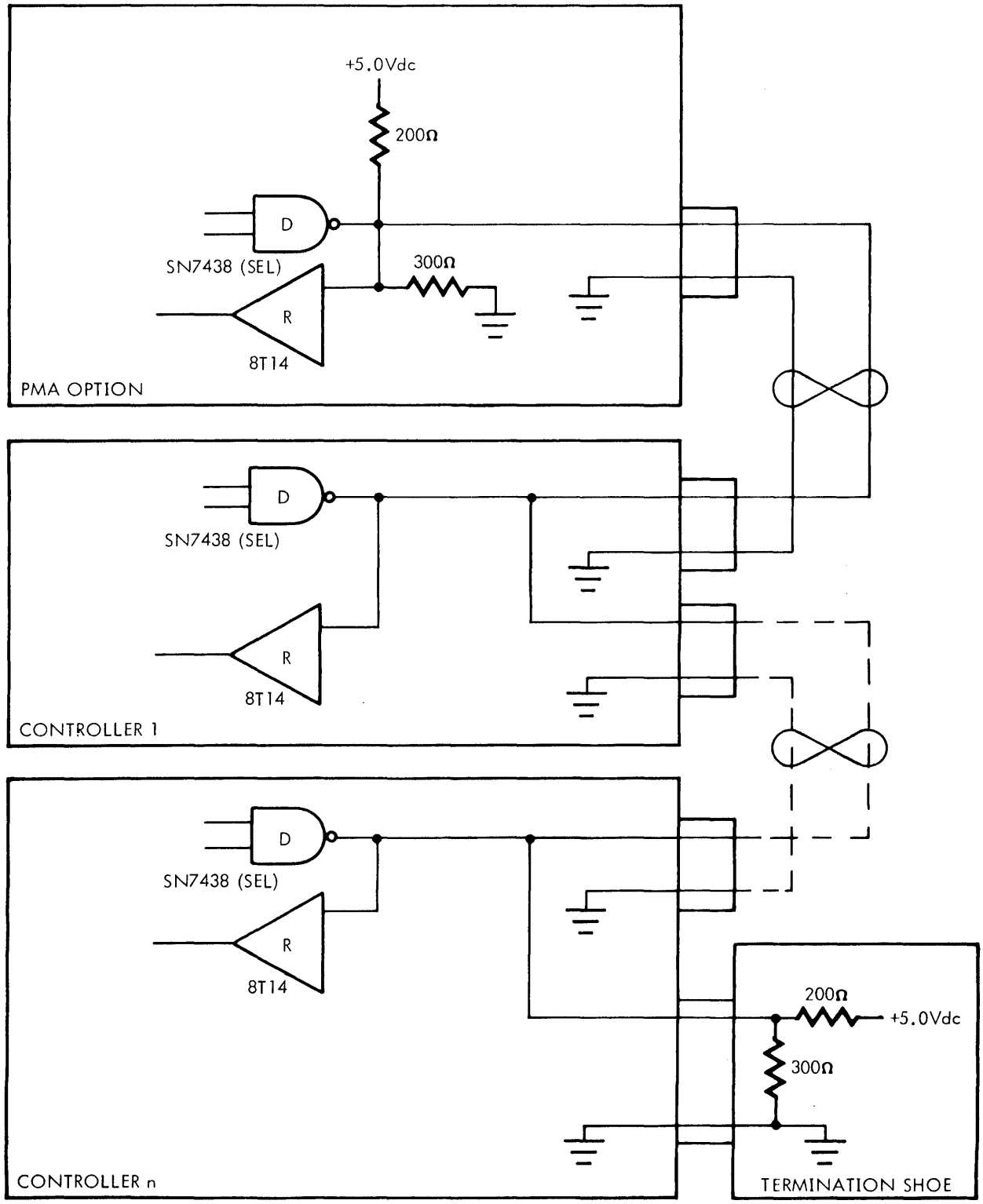

VTII-1595A

Figure 4-30. Typical PMA Bidirectional-Bus Line

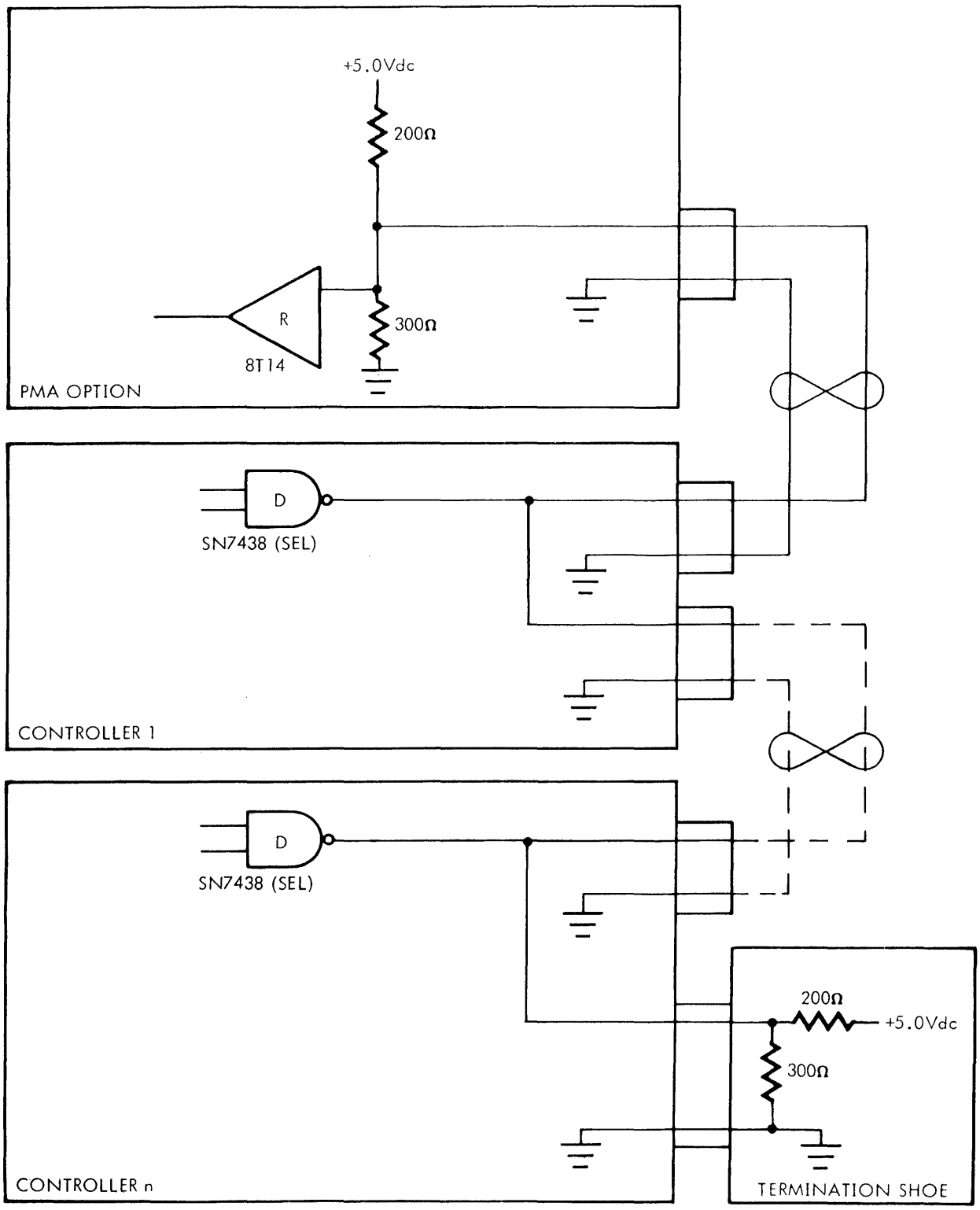

VTII-1596A

Figure 4-31. Typical Address-or Control-Line-In

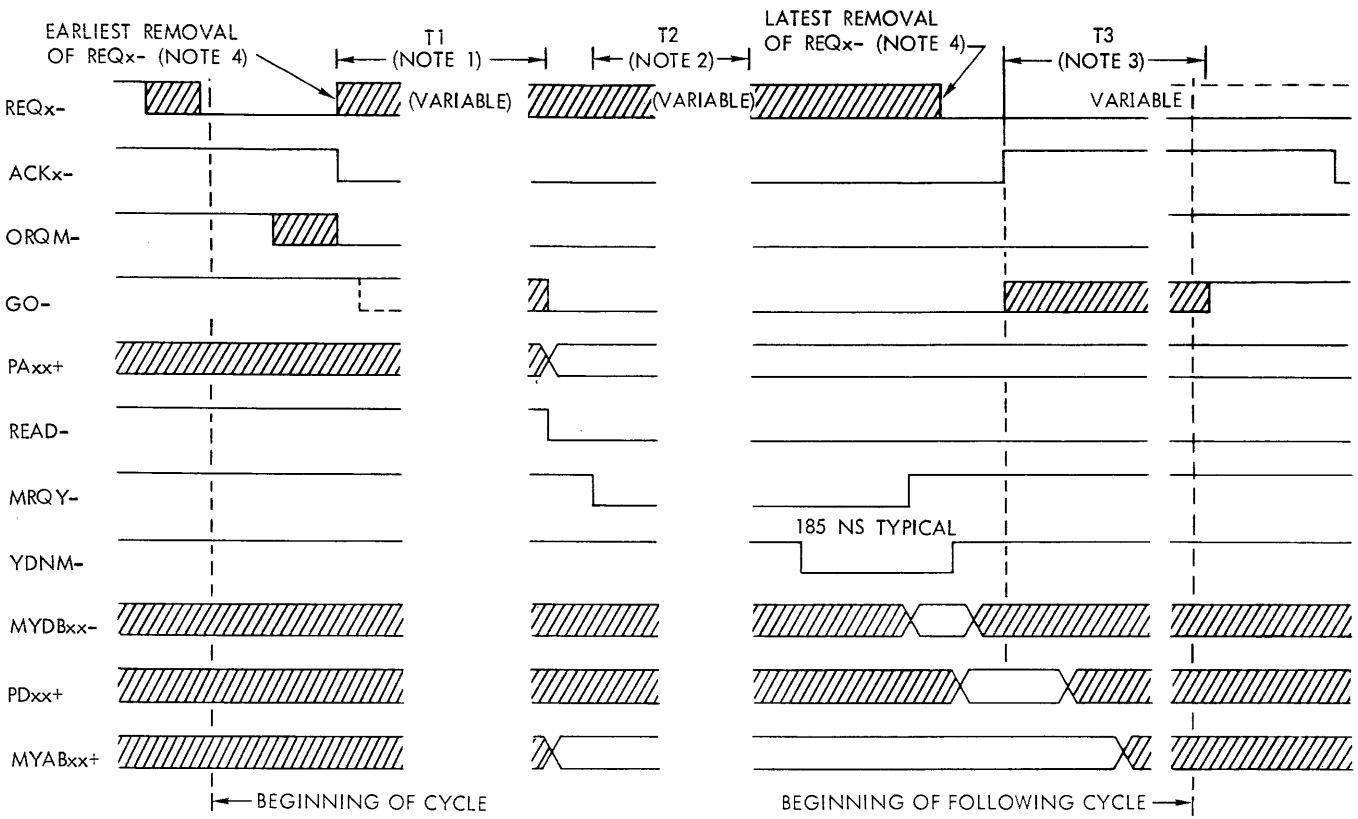

VTI2-412-4

Figure 4-32. PMA Output (Reading)

Note 1. T1 = Delay for controller to return GO. $0 < T1 < \infty$

Note 2. T2 = Delay for previous memory cycle to complete

Case 1: Clip (E89-E90) Installed PMA accessing different 8K of memory than CPU. T2 = 0

Case 2: Clip installed. PMA accessing same 8K of memory as CPU.

IC Memory		Core Memory	
T2 =	330 ns maximum 0 ns minimum 165 ns average	T2 =	660 ns maximum 0 ns minimum 330 ns average

Case 3: Clip not installed.

T2 is the same as in case 2 above.

Note 3. T3 = Delay for controller to remove GO. $0 < T3 < \infty$

Note 4. The PMA request (REQx-) may be removed as early as the leading edge of PMA acknowledge (ACKx-). It must be removed no later than 400 ns after the leading edge of PMA acknowledge if subsequent cycles are to be avoided.

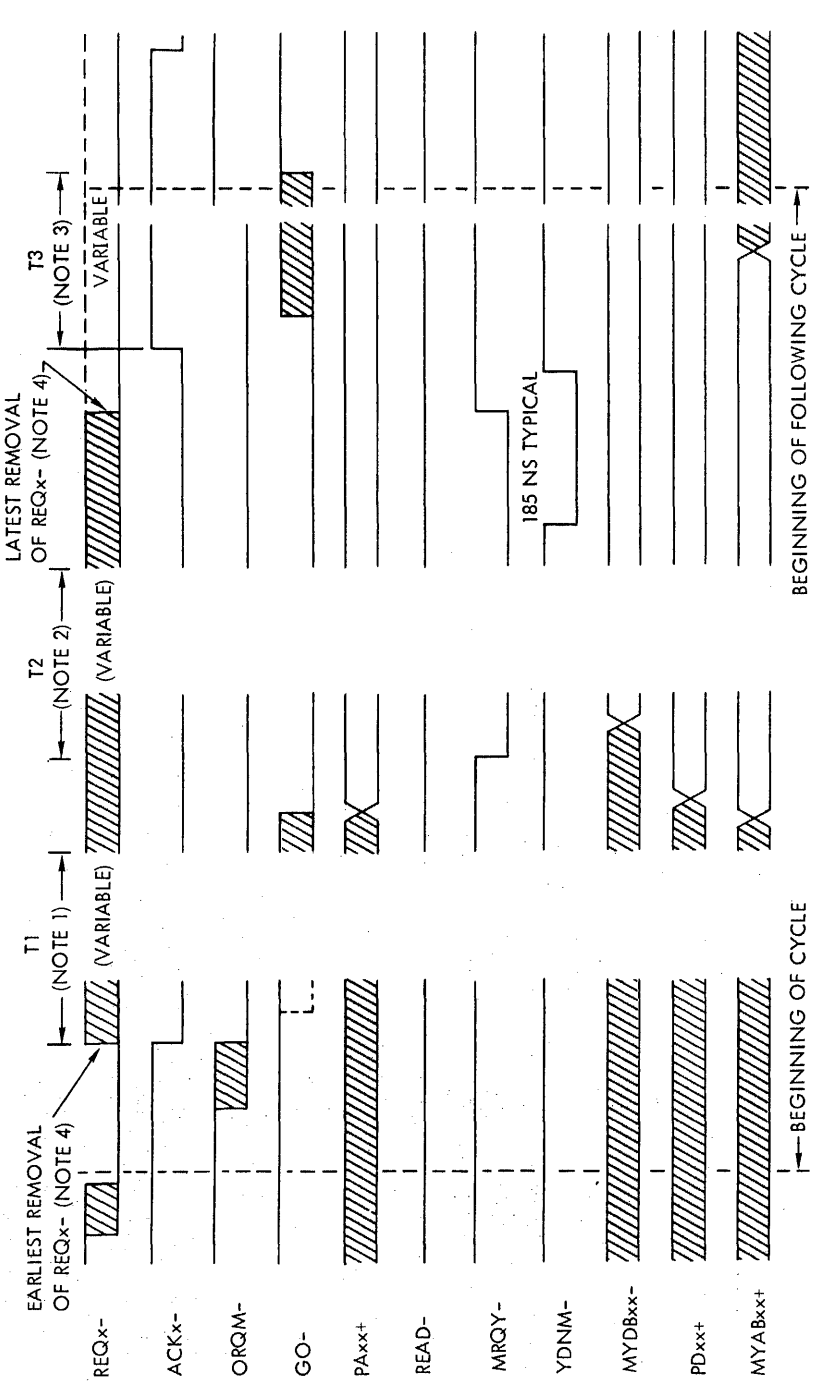

Note 1. T1 = Delay for controller to return GO. $0 < T1 < \infty$

Note 2. T2 = Delay for previous memory cycle to complete

Case 1: Clip (E89-E90) Installed PMA accessing different 8K of memory than CPU. T2 = 0

Case 2: Clip installed. PMA accessing same 8K of memory as CPU.

	IC Memory	Core Memory
T2 =	330 ns maximum	660 ns maximum
	0 ns minimum	0 ns minimum
	165 ns average	330 ns average

Case 3: Clip not installed.

T2 is the same as in case 2 above.

Note 3. T3 = Delay for controller to remove GO. $0 < T3 < \infty$

Note 4. The PMA request (REQx-) may be removed as early as the leading edge of PMA acknowledge (ACKx-). It must be removed no later than 320 ns after the leading edge of PMA acknowledge if subsequent cycles are to be avoided.

VTI2-413 A

Figure 4-33. PMA Input (Writing)

4.6.3 Circuit Description

This section describes the circuits indicated in the PMA block diagram (figure 4-34) and logic diagram 91B0401 (system documentation package).

REQUEST AND ACKNOWLEDGMENT: The request and acknowledgment logic consists of four channels that have hardware-assigned priorities in the sequence channel 1 through channel 4.

Channel priority is determined by gating the output of the four channel flip-flops ARQ1 through ARQ4. These are set by the request signals REQ1– through REQ4–, respectively, on the 82-nanosecond clock AK82–. If more than one request signal is true, the parity gating determines which one of these signals is to be next copied onto one of the acknowledgment flip-flops ACK1 through ACK4, thus producing one of the acknowledgment signals ACK1– through ACK4– inverted from the flip-flop set outputs ACK1 + through ACK4 +.

CONTROL AND CLOCK LOGIC: The control and clock logic has four non-inverting receivers that accept control signals HOG–, PMRS–, GO–, and READ–.

HOG– true gates the memory-port override signal MHGY– or MHMY– from PMA to memory if there is no power failure (FINTE– high).

A controller resets the PMA by enabling PMRS–, which gates reset signal ARST– low to reset the request, memory, and data sequencer flip-flops.

The PMA option receives the controller acknowledgment (GO–), activating the request and memory sequencer logic.

The PMA bus control signal READ– gates READA– and sets the memory access mode (read/write) for a given transfer.

The three free-running common-logic clocks MOCLK–, LK82 +, and MFCO + produce clock signals AK41 +, AK82±, and AK165 + respectively. The numbers in the clock-signal mnemonics indicate noanoseconds. AK165 +, derived from the processor clock, is constantly being phased by processor memory control and is synchronous with all processor operations. AK41 + and AK82 + have no phase relation to AK165 +.

REQUEST SEQUENCER: The three-stage request sequencer is composed of flip-flops that are triggered on the high-to-low transition of the free-running 82-nanosecond clock (AK82 +).

The request-sequencer set output (ARF1 +) goes high when: (1) a request is present (ARQ + high), (2) there is no power failure (FINTE– high), (3) the request-sequencer decoder is idle (ARDCI + high), and (4) a PMA controller acknowledgment is not active (AGO– high).

ARF2 + goes high when memory-sequencer signal AM1S + is high.

The request-sequencer set output (ARF3–) goes low at the same time as flip-flop 2. It is used only in the write mode. In read mode the set is blocked by READA + high. The request sequencer flip-flops are reset by ARIR + being high when a clock pulse AK82 + is present.

The memory priority request delay flip-flop set output (AROQ +) is enabled when AR1S + goes high. It is clocked by AK82 +. AROQ– low (or AR1S– low) then makes the 165-nanosecond request flip-flop set output (ORQM +) high on the high-to-low transition of clock AK165 +. ORQM– low is the memory-priority request.

All request-sequencer flip-flops are cleared by ARST– (reset PMA).

MEMORY SEQUENCER: The three stage flip-flop memory sequencer is clocked on the free-running 41-nanosecond clock (AK41 +). This Johnson counter progresses through six states during each memory sequence.

The memory-port request (MRQY–) is output when the first memory-sequencer flip-flop set output (AMF1 +) is made high by AM1S +. AM1S + goes high when: (1) the PMA has memory-port priority (AACKA + high); (2) the PMA GO signal (AGQ +) is high, and (3) memory-sequencer flip-flops 2 and 3 are off (AMF2– and AMF3– high). The first flip-flop is reset by AMDC7 + when all three flip-flops are set (AMF1 +, AMF2 +, and AMF3 + high) and AK82 + is high.

The memory-sequencer flip-flop 2 set output (AMF2 +) goes high when flip-flop 1 is set (AMF1 + high) and flip-flops 2 and 3 are both off (AMF2– and AMF3– high). At the same time, the memory-sequencer signal AMDC1– is activated. Flip-flop 2 resets at the next clock pulse after flip-flop 1 is reset.

The flip-flop 3 set output (AMF3 +) goes high when the first two flip-flops are set (AMF1 + and AMF2 + high), AMF3– is high, and the memory-sequence complete signal (ADDN +) is high. It is reset on the next clock pulse after flip-flop 2 is reset.

The memory-sequencer-idle and PMA address and data-buffer- clock signals are activated when the memory sequencer goes off (AMF1–, AMF2–, and AMF3– high).

The enable PMA memory-port signal (AACKA +) is active when the memory priority request flip-flops (AROQ + and ORQM +), and the memory-priority-acknowledgment signal (MAKO +) are all high. ACKJ– (jumpered to ground) enables AACKA + if no other user is one the memory port.

The low PMA bus output-received signal (READ–) is clocked by the low-to-high transition of AMF2 + to produce set output (AREAD–) low, inhibiting AMDEN +. The high reset output (AREAD +) enables the memory bus signals for input when AACKA + is high. These signals are low for output (read) operations.

The PMA controller acknowledgment-received signal GOA + is delayed 30-nanoseconds (GOAD +) to set the PMA GO

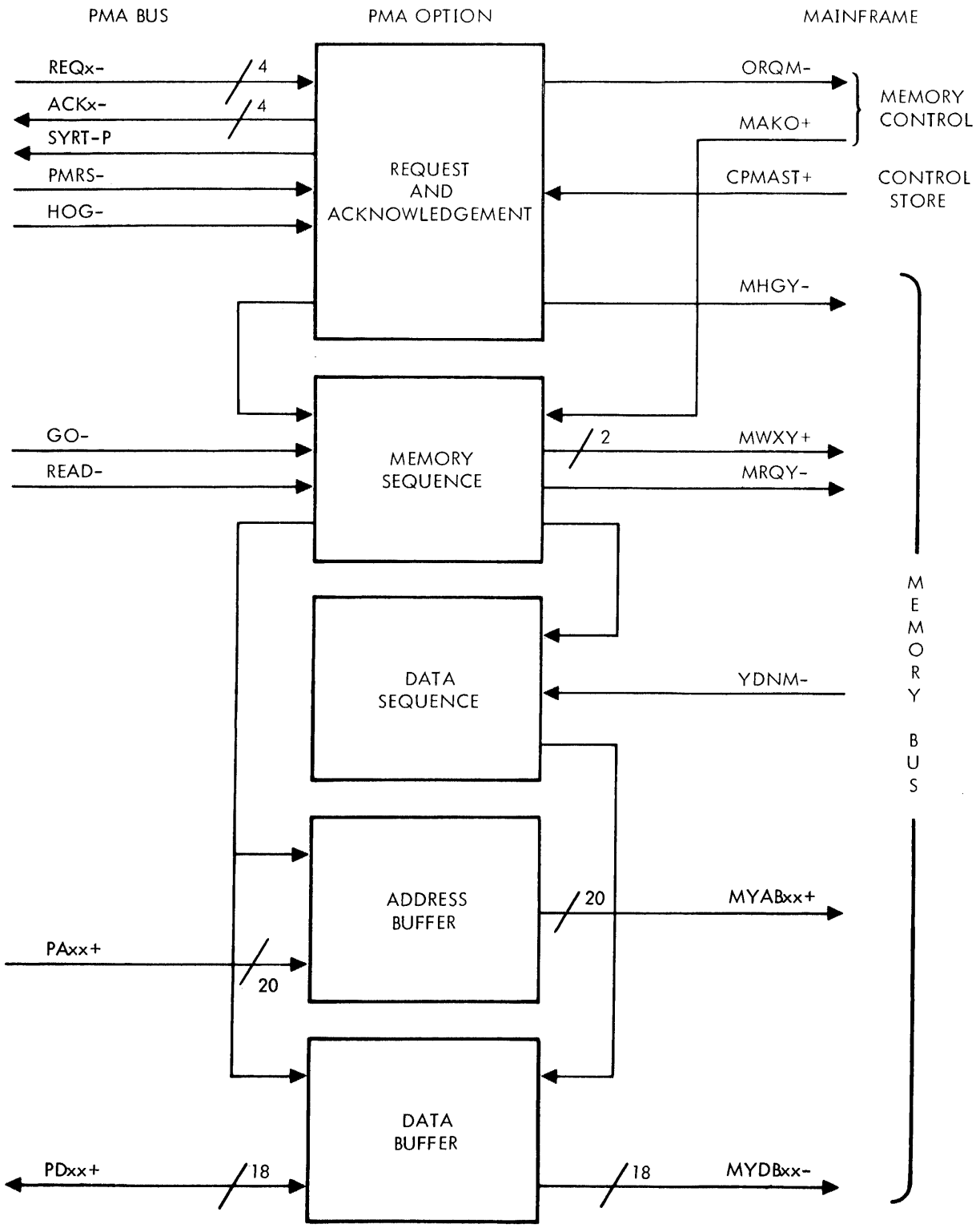

VTII-1599A

Figure 4-34. PMA Option Block Diagram

flip-flop set output pulse AGO+ high. The flip-flop is clocked on the high to low transition of AK41+. When AMF1+ is high, AGOL+ goes high to reset the AGO+ flip-flop. The AGOL+ flip-flop is reset when there is no PMA controller acknowledgment received (GOA– high) and the first memory sequencer flip-flop is reset (AMF1– high). This dual flip-flop latching circuitry ensures that only one GO signal occurs for every PMA request.

DATA SEQUENCER: The three-stage data sequencer flip-flops are clocked by the free-running 41-nanosecond clock (AK41±) and the 82-nanosecond clock (AK82+). The data sequencer starts when the memory-sequencer signal AMDC7+ is high and AREAD+ is received. This produces data-sequencer signal AD1S+ high, which sets flip-flop ADF1. At the same time, reset output ADF1- low gates PMA data-bus enabling signal APDEN+.

The second flip-flop set output signal ADF2+ goes high when ADF1+ and ADDN– (memory sequence incomplete) are high. This resets the first flip-flop and sets the third flip-flop (ADF3– low). ADF3– low enables the PMA data bus. The second flip-flop is reset by AD25+ low and AK41– going high. The first two flip-flops can also be cleared by the low reset PMA signal (ARST–).

The memory data buffer clock (AKMD+) is active when a memory sequence is incomplete (ADDN+ high) and ADF1+ is high. The memory-sequence complete signal is YDNM–.

ADDRESS BUFFER: The inputs to the address buffer consist of the PMA address-bus signals (PA00+ through PA19+) from the selected controller. These 20 signals go through separate non-inverting receivers to three six-bit latches. When the PMA address clock (AMDCI—) goes low, the latches are set by the incoming signals.

The memory-address signals (MYAB00+ through MYAB08+, MYPM09+ through MYPM15+, and MYK16+ through MYK19+) are then gated out to the memory bus when the PMA has memory-port priority (AACKA+ high).

DATA BUFFER: The data buffer has 18 data drivers and 18 data receivers that provide an interface between the memory bus and the 18-bit bidirectional data bus.

During writing, data signals PD00+ through PD17+ enter the data buffer from the active controller. Each of the 18 signals goes through a separate, non-inverting receiver to set one of the 18 flip-flops on the low-to-high transition of AMDC1–.

Data signals MYDB00– through MYDB17– are then gated out to the memory bus when the memory data bus enable (AMDEN+) goes high.

During reading, data signals MYDB00– through MYDB17– enter the data buffer from the memory bus. These 18 data signals set the three six-bit latches when the memory-data buffer clock (AKMD+) goes low. The inverted signals AD00L+ through AD17L+ are reinverted and then gated onto the bidirectional data bus when the PMA enable data bus signal (APDEN+) goes high.

4.6.4 Programming

Program control of devices that utilize PMA memory cycles occurs exclusively between the processor and the individual device controllers attached to the PMA channels. This control is through the I/O bus.

SECTION 5
MAINTENANCE

The option board common-logic is exercised by testing the individual options and has no maintenance procedures of its own.

5.1 TELETYPE CONTROLLER

TC maintenance consists of running test programs, troubleshooting, and making repairs if required. The test executive program and TTY test program, described in the MAINTAIN III manual, in conjunction with the V70 Series processor maintenance manual, help isolate an error condition. Troubleshooting is facilitated by familiarization with the operation of the TC and use of the logic diagram. This section provides troubleshooting data, program tests, and a list of reference documents to be used as maintenance aids.

5.1.1 Equipment

The following is a list of recommended test equipment for maintaining the TC.

a. Oscilloscope, Tektronix type 547

b. Multimeter, Triplett type 630

5.1.2 Test Programs

The condition of the TTY unit should be periodically checked using program tests. These tests for TC and TTY are provided as part of the regular troubleshooting package.

NOTE

One section of the TTY test program for ASR models includes a print suppression test. The 33 ASR does not perform this function, so this test program should be bypassed when testing the 33 ASR (refer to the MAINTAIN III manual).

The TTY test program is a good diagnostic aid because the data being sent are printed out and can be analyzed. Also, known input patterns can be generated (via keyboard or paper tape) and data can be analyzed in the computer or returned to the TTY for printed analysis. If for some reason, such as PTR failure, the test program tapes cannot be read, a simple input/output program for verification and troubleshooting of the TTY-TC operation can be entered through the computer control panel. This program (figure 5-1) tests keyboard input and printer output:

a. Enter the program through the control panel.

b. Turn the TTY to ON-LINE.

c. Program starts at address 000000.

d. Any character input from the TTY is transferred back to the TTY as an output from the processor TC almost immediately. Various character patterns and functions of the TTY can be checked by this echo method.

Location	Command	Description
00000	101201	Sense read ready.
00001	000004	If yes, jump to 00004.
00002	001000	Jump back to 00000.
00003	000000	
00004	102501	Clear and input TTY character to A register.
00005	101101	Sense write ready.
00006	000011	If yes, jump to 00011.
00007	001000	
00010	000005	
00011	103101	Output A register (to TC).
00012	001000	Jump back to 00000.
00013	000000	

Figure 5-1. Basic Input/Output Test Program

5.1.3 TC/TTY Troubleshooting

The TTY units are normally trouble-free and require little attention; however, if operation is faulty, the following troubleshooting procedures are suggested. Visually inspect for broken belts, loose cams or components, loose or poorly seated connectors, blown fuses, or burned-out components.

NOTE

The TTY casework is cast and, therefore, somewhat fragile. Exercise care when removing and reinstalling it.

GARBLING: The following are possible sources of intermittent character change (printing or sending wrong characters).

TTY	Incorrect power supply output
TTY	Incorrect motor speed
TTY	Incorrect range adjustment
TC	Incorrect TC frequency
TTY-TC	Incorrect loop current (too low or too high)

MOTOR SPEED CHECK: The TTY character output rate must be 100 milliseconds per character. The motor speed, which is not adjustable, can be checked as follows.

a. Check TRRA + with an oscilloscope. Set oscilloscope SYNC to positive internal and set scope time to 10 or 20 msec/cm.

b. Hold down the RUBOUT and REPEAT keys on the TTY keyboard. Adjust oscilloscope to observe the TTRA + waveform. TTRA + should set on every stop bit 1 and remain set until a data-transfer-in is completed. The time from set to set should be 100 milliseconds. Switch the oscilloscope to observe that 10 characters occur each second. If single character time is off by more than 2 milliseconds, the TTY motor may require change, overhaul, readjustment, or other maintenance.

TROUBLESHOOTING CHECK LIST: If the TC and TTY are not operating:

a. Check voltages.

b. Check cable connections and board seating.

c. Check that the TC clock (TCLK +) has a 570-microsecond period.

d. Check that both optical couplers are active in normal static nonoperating condition. If not, the source of the problem may be the TTY, the coupler loop supply, or the optical coupler.

If the TC and TTY have intermittent problems:

a. Check voltages.

b. Check cable connections and board seating.

c. Remove and inspect the option board for loose components, poor solder connections, and wrong-value components.

d. Check clock timing.

e. Check signals across the optical couplers.

5.2 POWER FAILURE/RESTART

PF/R maintenance consists of running the PF/R test program, troubleshooting, and making repairs, if required. The PF/R test program, described in the MAINTAIN III manual (98 A 9952 07x), in conjunction with the Varian 70 Series maintenance manual, helps isolate an error condition. Troubleshooting is facilitated by familiarization with the operation of the PF/R and use of the logic diagram.

5.2.1 Equipment

The following is a list of recommended test equipment for maintaining the PF/R.

a. Oscilloscope, Tektronix type 547

b. Multimeter, Triplett type 630

c. Squarewave generator

d. Autotransformer, Variac or equivalent

5.2.2 Test Program

The PF/R test program is an integral part of the MAINTAIN II test program system. It is provided as part of the regular troubleshooting package.

PF/R operation should be periodically checked using the PF/R test program, under the control of the test executive program (92A0107-001). This test verifies that volatile registers and memory are not modified by a loss of power. Malfunctions are reported in the form of error messages and/or codes.

The PF/R test program is described in detail in the 620 test programs manual.

5.2.3 Troubleshooting

Troubleshooting the PF/R comprises verification of input power, signal and performance test parameters and marginal ac power.

INPUT POWER: Verify + 5V dc ± 5 percent and common (ground).

SIGNAL TEST: Load the PF/R test program, following the directions given in the 620 test programs manual. The program responds to power-down and power-up sequences initiated by the test operator.

PERFORMANCE TEST: Verifying the performance of the PF/R in the computer system requires use of the PF/R test program. The 620 test programs manual describes loading and operating procedures, expected results, and error conditions. In this test, power-down/power-up sequences are initiated by turning power off and on from the computer.

MARGINAL ac POWER TEST: To verify that the PF/R properly initiates a power-down sequence when ac power is below threshold, plug the ac power line into a heavy-duty autotransformer, and run the performance test, leaving the control panel power switch ON. Adjust the autotransformer for 110V ac and slowly change the voltage to 104V ac. A power-down sequence should be initiated when input goes below threshold.

5.3 REAL-TIME CLOCK

RTC maintenance consists of running the RTC test program, troubleshooting, and making repairs, if required. The RTC test program described in the MAINTAIN III manual (document number 98A 9952 07x), in conjunction with the V70 Series processor maintenance manual, helps isolate an error condition. Troubleshooting is facilitated by familiarization with the operation of the RTC and use of the logic diagram.

5.3.1 Equipment

The following is a list of recommended test equipment for maintaining the RTC.

a. Oscilloscope, Tektronix type 547

b. Multimeter, Triplett type 630

5.3.2 Test Program

The RTC test program is an integral part of the MAINTAIN II test program system. It is provided as part of the regular troubleshooting package.

RTC operation should be periodically checked with the RTC test program, under the control of the test executive program (part number 92A0107-001). The variable interval and memory overflow interrupts and the free-running counter are software-timed and tested. Malfunctions are reported in the form of error messages and/or codes.

The RTC test program is described in detail in the MAINTAIN III manual (document number 98 A 9952 07x).

5.3.3 Troubleshooting

Troubleshooting the RTC comprises verification of critical input power and timing parameters.

INPUT POWER: Verify +5V dc ± 5 percent and common (ground).

SCHMITT-TRIGGER CIRCUIT: Verify 24V rms, 50- or 60-Hz ± 5 percent sinewave input at P01-A05 and 50- or 60-Hz ± 5 percent squarewave output at E3. Check that the output signal follows the input signal.

EXTERNAL TIMING SOURCE: If a user-supplied external timing source (TP1) is jumpered to either pin E18 (free-running counter) or pin E14 (variable interval counter):

a. Apply +5 ± 0.5V dc to TP1. Measure +5 ± 0.5V dc at E15.

b. Apply 0.0 ± 0.5V dc to TP1. Measure 0.0 ± 0.5V dc at E15.

5.4 MEMORY PROTECTION

MP maintenance consists of running the MP test program, troubleshooting, and making repairs, if required. The MP test program, described in the MAINTAIN III manual, in conjunction with the V70 Series processor manual, helps isolate an error condition. Troubleshooting is facilitated by familiarization with the operation of the MP and use of the logic diagram.

5.4.1 Equipment

The following is the recommended test equipment for maintaining the MP.

a. Oscilloscope, Tektronix type 547

b. Multimeter, Triplett type 630

5.4.2 Test Program

The MP test program is an integral part of the MAINTAIN II test program system. It is provided as part of the regular troubleshooting package.

MP operation should be checked with the MP test program (92A0105-002), under the control of the test executive program (92A0107-001). MP malfunctions are reported in the form of error messages and/or codes.

The MP test program is described in detail in the MAINTAIN III manual (98 A 9952 07x).

5.4.3 Troubleshooting

Turn the computer off, open the front panel on its hinges, connect the option board in the top slot, turn the computer on, and make the following checks.

INPUT POWER: Verify +5V dc ± 5 percent and common (ground).

MANUAL TESTS: Performing the following manual tests, in conjunction with the MP test program, ensures a thorough test of the operation of the MP. Before executing the test subroutines described below, press RESET and set run mode.

MASK REGISTER ADDRESSING: Select a mask register and verify that its contents are not altered by data-transfer-out operations.

Address	Instruction	Mnemonic	Decription
000100	100045	EXC	Select mask register 0
000101	010113	LDA	
000102	103145	OAR	Load mask register
000103	010114	LDA	

(continued)

Address	Instruction	Mnemonic	Description
000104	103105	OAR	Addressing test 1
000105	103165	OAR	Addressing test 2
000106	103155	OAR	Addressing test 3
000107	103141	OAR	Addressing test 4
000110	103147	OAR	Addressing test 5
000111	103144	OAR	Addressing test 6
000112	000077	HLT	
000113	052525	DATA	
000114	125252	DATA	

Begin at address 000100. After execution of the HLT instruction, verify that the contents of mask register 0 are 052525.

I/O INTERRUPT CONTROL: Using the sample subroutine described below, verify that:

a. MP normal performance of the I/O sequence.

b. Acknowledgment of an MP interrupt request disables MP until reenabled by an I/O instruction.

c. No interrupts occur when the MP is disabled, even when programs containing known errors are executed; in this case, change the contents of address 000124 to 005000 (NOP) for this step only.

d. BINTE– is held false to lock out lower-priority external device controllers during an MP-generated interrupt.

Address	Instruction	Mnemonic	Description
000022	001000	JMP	I/O error interrupt address
000023	000124		
000120	100045	EXC	Select mask register 0
000121	006010	LDAI	Set up mask
000122	000001		
000123	103145	OAR	Load mask register
000124	100645	EXC	Enable MP
000125	001000	JMP	
000126	001100		
001100	005000	NOP	
001101	100045	EXC	I/O instruction unprotected
001102	000007	HLT	

INTERRUPT CONTROL: Verify that the CPU can be interrupted from a program operating in an unprotected area to a subroutine in a protected area by a non-MP-generated interrupt request. Verify that no errors are detected and that the MP does not generate an error interrupt request.

Address	Instruction	Mnemonic	Description
000000	001000	JMP	Control panel interrupt address
000001	000010		
000010	005000	NOP	
000011	000077	HLT	Halt after successful test
000012	001000	JMP	Return to unprotected area
000013	001140		
000026	001000	JMP	
000027	000040		
000040	000777	HLT	Halt on test failure
000150	100045	EXC	Select mask register 0
000151	006020	LDBI	Set up mask
000152	000001		
000153	103245	OBR	Load mask register
000154	100645	EXC	Enable MP
000155	001000	JMP	Jump to unprotected area
000156	001140		
001140	001000	JMP	Loop in unprotected area
001141	001140		

Start execution of the subroutine at address 000151. During the unprotected-area loop, issue a control panel interrupt by pressing INT. The program should halt with 000077 in the I register. To reenter the loop in the unprotected area, press START.

UNINTERRUPTABLE INSTRUCTIONS: Verify that non-MP-generated interrupt requests are not recognized by the CPU immediately following the execution of noninterruptable instructions.

Address	Instruction	Mnemonic	Description
000000	001000	JMP	Control panel interrupt address
000001	000162		
000160	006010	LDAI	Load A register positive
000161	000077		
000162	100045	EXC	External control instruction
000163	003004	XAN	Execute, condition not met
000164	000077		Loop
000165	001000	JMP	
000166	000162		

Start execution of the subroutine at address 000160. Ground IURX– on the option board and, in run mode, verify with an oscilloscope that OINT– is inhibited during HLTD and the execution of the EXC and XEC instructions.

STEP MODE OPERATION: Verify that non-MP-generated interrupt requests are not recognized by the CPU immediately following the execution of a non-HLT, non-EXC, and non-XEC instruction in step mode.

Address	Instruction	Mnemonic	Description
000000	001000	JMP	Interrupt address
000001	000002		
000002	000007	HLT	
000166	001000	JMP	Loop at 000166
000167	000166		

Ground IURX– on the option board and step through the loop at 000166. Verify that no interrupts occur.

5.5 PARITY

PARITY maintenance consists of troubleshooting and making repairs as required. Troubleshooting with the oscilloscope and multimeter is facilitated by familiarization with the operation of the PARITY and use of the logic diagram.

Test PARITY as follows:

a. Use a functioning V70 series computer system.

b. Enable PARITY interrupts.

c. Output the bit patterns in table 5-1 from processor to memory in consecutive locations. Check that the parity bits are in the correct logical states at the time that YDNM— samples the memory bus, that memory bus timing requirements are met and that no interrupts occur.

d. Input the table from memory and check that no interrupts occur.

e. Remove jumper clip from bits 16 and 17 of the memory word on the option board so that on read-from-memory operations the parity bits to the parity circuits will be zero at all times.

f. Input the table again as in (d) and check that a parity interrupt occurs for each word input except 8 and 16. With an oscilloscope check that both EWRPR+ and EWLPR+ are low at the high-to-low transition of EKRDD–

g. Repeat the above tests with interrupts disabled by grounding ENTR1– and check that no interrupts occur.

h. Repeat the above tests (c) through (f) with interrupts disabled by grounding ENTR1– and check that no interrupts occur.

i. Repeat the above tests (c) through (f) with interrupts disabled by the system reset on the front panel and check that no interrupts occur.

j. Repeat the above tests (c) through (f) and individually force FINTE– and BINTE– low and check that PRNE– is high.

k. With computer in step, perform system reset and check that PRNE– is high when FOS– is low and that PRNE– goes low when FOS– goes high.

If any of the above tests fail, repair the cause of the failure by tracing backwords through the logic, finding the cause, and replacing the defective component.

5.6 PRIORITY MEMORY ACCESS

PMA maintenance consists of running test programs, troubleshooting, and making repairs, if required. Troubleshooting is facilitated by familiarization with the operation of the PMA and controllers, and with their respective logic diagrams.

The PMA test and associated hardware tests are not part of this manual as they are designed for in-house testing only. This section of the manual is intended for field-service troubleshooting.

Table 5-1. Parity Check Pattern

Byte		Left Byte									Right								
Memory Bits		15	14	13	12	11	10	9	8	7	7	6	5	4	3	2	1	0	16
	1	1	1	0	0	0	0	0	0	1	0	0	0	0	0	0	0	0	1
	2	0	1	1	0	0	0	0	0	1									1
Word No.	3	0	0	1	1	0	0	0	0	1									1
	4	0	0	0	1	1	0	0	0	1									1
	5	0	0	0	0	1	1	0	0	1									1
	6	0	0	0	0	0	1	1	0	1									1
	7	0	0	0	0	0	0	1	1	1	0	0	0	0	0	0	0	0	1
	8	0	0	0	0	0	0	0	0	0	1	0	0	0	0	0	0	0	0
	9	0	0	0	0	0	0	0	0	1	1	1	0	0	0	0	0	0	1
	10									1	0	1	1	0	0	0	0	0	1
	11									1	0	0	1	1	0	0	0	0	1
	12									1	0	0	0	1	1	0	0	0	1
	13									1	0	0	0	0	1	1	0	0	1
	14									1	0	0	0	0	0	1	1	0	1
	15	0	0	0	0	0	0	0	0	1	0	0	0	0	0	0	1	1	1
	16	1	0	0	0	0	0	0	0	0	0	0	0	0	0	0	0	1	0

5.6.1 Equipment

The following is a list of recommended test equipment for maintaining the PMA.

a. Oscilloscope, Tektronix 547 (or equivalent)

b. Multimeter, Triplett type 630 (or equivalent)

5.6.2 Troubleshooting

If an error condition exists, make the following checks on the PMA and controller boards before attempting dynamic tests.

a. Check voltage levels to ensure that the 5.0V dc power supply is correctly adjusted.

b. Check cable connections and board seating.

c. Remove the boards and inspect for loose components, poor solder connections, incorrect IC locations, and incorrect component values.

d. Check jumpers for correct connections for the mode under test.

Once these checks have been completed and the boards are replaced, perform the following dynamic checks.

a. After loading the test program and while the PMA is continually accessing memory at location 0777777, verify that memory address lines MYA00+ through MYA17+ are stable 40 nanoseconds after AACKA goes true, and remain stable until AACKA goes false (make measurements at the 1.5V level). The PMA should send read transfers continuously from the above location (if the PAxx+ lines are left open) when the following jumpers are connected:

   READ– to ground
   REQ1– to ground
   ACK1– to GO–

b. Verify that the PMA can address all 32K of memory. Use the test setup in step a and ground each PAxx+ line to ensure that the respective MYDxx+ lines go false.

c. Verify that the PMA logic is initialized and the PMA system reset signal SYRT-P goes true when the reset switch on the console is pressed. SYRT-P remains low during the time the reset switch is pressed.

d. Verify that the PMA logic is also initialized by PMA reset signal PMRS–. To do so, ground PMRS– and check that ARST– goes low (true).

If an error condition still exists after these checks, replace the PMA and send the malfunctioning one back to the Sperry Univac test laboratory. The PMA laboratory tester, in conjunction with the computer and PMA test program, will make the following dynamic tests:

a. The **Input Block Test** checks the ability of the PMA option to transfer accurately a 256-word block of data into memory through each of the four PMA channels.

b. The **Output Block Test** checks the ability of the PMA to transfer accurately a 256-word block of data from memory through each of the four PMA channels.

c. The **Read Word/Write Word Test** checks the ability of the PMA to transfer accurately a block of data from memory and to replace it in memory at the maximum data transfer rate. All four channels are tested sequentially.

d. The **Priority Test** verifies the following:

   1. The PMA priority logic correctly assigns priority to requests for data transfer.

   2. The PMA control logic functions correctly.

   3. The memory cycle rate is successfully synchronized to a rate less than the maximum by reserving a memory cycle and delaying the memory start signal.

SECTION 6
MNEMONICS

This section contains lists of option-board signal mnemonics. Immediately below are the mnemonics for the common logic, followed in the subsequent subsections by lists for the individual options.

Mnemonic	Description
DRYX-I	I/O bus data ready
EB00-I	I/O bus bit 00
EB01-I	I/O bus bit 01
EB02-I	I/O bus bit 02
EB03-I	I/O bus bit 03
EB04-I	I/O bus bit 04
EB05-I	I/O bus bit 05
EB06-I	I/O bus bit 06
EB07-I	I/O bus bit 07
EB08-I	I/O bus bit 08
EB09-I	I/O bus bit 09
EB10-I	I/O bus bit 10
EB11-I	I/O bus bit 11
EB12-I	I/O bus bit 12
EB13-I	I/O bus bit 13
EB14-I	I/O bus bit 14
EB15-I	I/O bus bit 15
FRYX-I	I/O bus function ready
IUAX-I	I/O bus interrupt acknowledgment
IUCX-I	I/O bus interrupt clock
IUJX-I	I/O bus interrupt jump
IURX-I	I/O bus interrupt request neg.
LK82 +	**Free-running 82-nanosecond clock**
LK82–	Free-running 82-nanosecond clock neg.
MFC–	165-nanoseconds full clock
MFCO +	**Memory free-running clock**
MFHCO +	
MHC–	165-nanoseconds half clock
MHCO +	
MOCLK±	Option board common logic clock
MTRC–	Option board common logic clock input for RTC and TTY
OBOUTA–	Option board common logic receiver disabler A
OBOUTB +	**Option board common logic driver enabler B**
OBOUTB–	Option board common logic receiver disabler B
OBOUT +	**Option board common logic driver enabler A**
OBOUT–	Option board common logic output driver enabler
OB00–	Option board common logic bit 00
OB01±	Option board common logic bit 01
OB02±	Option board common logic bit 02
OB03±	Option board common logic bit 03
OB04±	Option board common logic bit 04
OB05±	Option board common logic bit 05
OB06±	Option board common logic bit 06
OB07±	Option board common logic bit 07
OB08±	Option board common logic bit 08
OB09±	Option board common logic bit 09
OB10±	Option board common logic bit 10
OB11±	Option board common logic bit 11
OB12±	Option board common logic bit 12
OB13±	Option board common logic bit 13
OB14±	Option board common logic bit 14
OB15±	Option board common logic bit 15
ODRYX +	**Option board common logic data ready**
OFRYX +	**Option board common logic function ready**
OIUAX +	**Option board common logic-interrupt ack.**
OIUCX +	**Option board common logic-interrupt clock**
OIUJX +	**Option board common logic-interrupt jump**
OIURX±	Option board common logic interrupt request
OSYRT +	**Option board common logic system reset**
SYRT-I	I/O bus system reset
TR82 +	**82.5-nanosecond clock to RTC and TTY**

6.1 TELETYPE CONTROLLER

Mnemonic	Description
IUAA-I	Output (write) interrupt line to PIM
IUBB-I	Input (read) interrupt line to PIM
OBOUT–	Option board common I/O logic output driver enable R
OB00–	Option board common I/O logic bit 00
OB01–	Option board common I/O logic bit 01
OB02–	Option board common I/O logic bit 02
OB03–	Option board common I/O logic bit 03
OB04–	Option board common I/O logic bit 04
OB05–	Option board common I/O logic bit 05
OB06–	Option board common I/O logic bit 06
OB07–	Option board common I/O logic bit 07
OB11–	Option board common I/O logic bit 11
OB12–	Option board common I/O logic bit 12
OB13–	Option board common I/O logic bit 13
OB14–	Option board common I/O logic bit 14
ODRYX +	**Option board common I/O logic data ready**
OFRYX +	**Option board common I/O logic function ready**
OIUAX +	**Option board common I/O logic-interrupt ack.**
OSYRT +	**Option board common I/O logic system reset**
SERX-I	Sense response
TAQD +	**Output of first 4-bit counter**
TBQD +	**Output of second 4-bit counter**
TBREA +	**TC input character ready**
TBRL–	MOS transmitter load buffer
TB00–	Internal I/O bus bit 00
TB05–	Internal I/O bus bit 05
TCCLK +	**Internal 82-nanosecond clock**
TCLK +	**MOS transmitter/receiver clock pos.**
TCLK–	MOS transmitter/receiver clock neg.
TCQB +	**QB output of third 4-bit counter**
TCQC +	**QC output of third 4-bit counter**
TCQD +	**QD output of third 4-bit counter**

Mnemonic	Description
TDA +	Device address 01 detected
TDA1 +	Lower five bits of device address 01
TDRA +	MOS receiver data ready flag repowered
TDRIO +	AND of ODRYX +, TDTIO +
TDRR–	Reset data ready flag
TDR +	MOS receiver data ready flag
TDTIO +	Data-transfer flip-flop (in or out) set
TDTI +	Data-transfer-in flip-flop pos.
TDTI–	Data-transfer-in flip-flop neg.
TDTO +	Data-transfer-out flip-flop pos.
TDTO–	Data-transfer-out flip-flop neg.
TDTWR +	AND of TCQB +, TCQC +, TCQD +
TEXC–	Internal reset enabler
TFRDA +	AND of TDA +, OFRYX +
TFRDA–	Inversion of TFRDA
TINZA +	Internal initializer pos. repowered
TINZA–	Internal initializer neg. repowered
TINZ +	Internal initializer pos.
TINZ–	Internal initializer neg.
TIUAX–	Internal interrupt line
TJDTI +	J-input to data-transfer-in flip-flop
TJDTO +	J-input to data-transfer-out flip-flop
TKIO +	Clock to data transfer in and out flip-flops
TLOBF +	Data-transfer-out load buffer
TODRR–	Neg. output of data-ready reset one-shot
TOE +	MOS receiver overrun error flag pos.
TOE–	MOS receiver overrun error flag neg.
TRI–	MOS receiver input
TRR00 +	MOS receiver data bit 00
TRR01 +	MOS receiver data bit 01
TRR02 +	MOS receiver data bit 02
TRR03 +	MOS receiver data bit 03
TRR04 +	MOS receiver data bit 04
TRR05 +	MOS receiver data bit 05
TRR06 +	MOS receiver data bit 06
TRR07 +	MOS receiver data bit 07
TRS +	TC receiver ready
TR82 +	82.5-nanosecond clock from common logic
TSYST–	Internal system reset from front panel
TTBRE +	MOS transmitter buffer register empty flag
TTBREA +	MOS transmitter buffer register empty flag repwr
TTDB0 +	Data-transfer-out buffer register bit 0
TTDB1 +	Data-transfer-out buffer register bit 1
TTDB2 +	Data-transfer-out buffer register bit 2
TTDB3 +	Data-transfer-out buffer register bit 3
TTDB4 +	Data-transfer-out buffer register bit 4
TTDB5 +	Data-transfer-out buffer register bit 5
TTDB6 +	Data-transfer-out buffer register bit 6
TTDB7 +	Data-transfer-out buffer register bit 7
TTROA +	MOS transmitter output pos. repowered
TTRO +	MOS transmitter serial output pos.
TTRO–	MOS transmitter output neg.
TTR +	Transmitter or receiver ready sense line
TTS +	Output ready sense response
TTWR +	2XMOS transmitter/receiver clock
TTYR +	Teletype interface in pos.
TTYR–	Teletype interface in neg.
TTYT +	Teletype interface out pos.
TTYT–	Teletype interface out neg.
TYCLR–	Teletype interface current-loop return

6.2 POWER FAILURE/RESTART

Mnemonic	Description
FCS12 +	Sequence state 01 or 10 decoded
FCS1 +	Sequence state 01 decoded
FCS2 +	Sequence state 10 decoded
FCX1R +	Reset FCX1 +
FCX1 +	Least-significant sequencer flip-flop
FC1XR +	Reset FC1X +
FC1XS +	Set FC1X +
FC1X +	Most-significant sequencer flip-flop
FINTE–	Interrupt priority output
FIOAK +	PF/R interrupt priority
FIOD +	Interrupt response flag
FOS–	PF/R one-shot
FRST–	Reset PF/R sequencer
OBOUT–	Common logic output
OB01–	E-bus bit 1 for interrupt address
OB05–	E-bus bit 5 for interrupt address
OINT–	Internal interrupt output
OIURX–	Interrupt request
OPSTRT–	Start
SPFA–	PF/R alarm from power supply

6.3 REAL-TIME CLOCK

Mnemonic	Description
AK165 +	165-nanosecond clock from the memory-protection logic
CCS3D +	Increment-and-replace instruction from proc. pos.
ETR +	External timing source
ETR–	External timing source return
LFRFC +	24V ac output from the computer power supply
LFRFC–	24V ac return from the computer power supply
MIL14A–	Memory input latch bit-14 from processor neg.
OBOUT–	Enable I/O common-logic output
OB00–	Option board common I/O logic bit 00
OB01–	Option board common I/O logic bit 01
OB02–	Option board common I/O logic bit 02
OB03–	Option board common I/O logic bit 03
OB04–	Option board common I/O logic bit 04
OB05–	Option board common I/O logic bit 05
OB06–	Option board common I/O logic bit 06
OB07–	Option board common I/O logic bit 07
OB08–	Option board common I/O logic bit 08
OB09–	Option board common I/O logic bit 09
OB10–	Option board common I/O logic bit 10
OB11–	Option board common I/O logic bit 11
OB12–	Option board common I/O logic bit 12
OB13–	Option board common I/O logic bit 13
OB14–	Option board common I/O logic bit 14
OB15–	Option board common I/O logic bit 15
ODRYX +	Option board common I/O logic data ready
OFRYX +	Option board common I/O logic function ready
OIUAX +	Option board common I/O logic interrupt ack.
OIUCX +	Option board common I/O logic interrupt clock
OIUJX +	Option board common I/O logic interrupt jump
OIURX–	Common logic interrupt request neg.

Mnemonic	Description
OSYRT +	Option board common I/O logic system reset
PRRTCI–	Priority-in input from a higher-priority controller
PRRTCO–	Priority-out to a lower-priority controller
RBS03	Inverted source of OB03–
RBS04–	Inverted source of OB04–
RBT14 +	Interval memory input-latch bit 14 pos.
RB01 +	Interrupt address or free-running counter bit 1 pos.
RB02 +	Interrupt address or free-running counter bit 2 pos.
RB05 +	Interrupt address of free-running counter bit 5 pos.
RCA +	Output of first stage of the variable-interval counter
TR82 +	82.5-nanosecond clock from common logic
RCB +	Output of second stage of the variable-interval counter
RCC +	Output of third stage of the variable-interval counter
RCLK +	Internal 12 MHz clock
RC08 +	Output of first-programmed counter
RC128 +	Output of second programmed counter
RDA47 +	Device address 047 decoded pos.
RDA47–	Device address 047 decoded neg.
RDDTI +	Data-transfer-in flip-flop input
RDHT	RDTI flip-flop preset
RDRY–	Inversion of ODRYX
RDTIA +	Data-transfer-in flip-flop pos. repowered
RDTI +	Data-transfer-in flip-flop pos.
RDTI–	Data-transfer-in flip-flop neg.
RDTO +	Data-transfer-out flip-flop pos.
RDTO–	Data-transfer-out flip-flop neg.
REDS–	Preset memory overflow test enabler flip-flop neg.
REMT +	Memory overflow test flip-flop enabler pos.
RETR +	Internal/external timing source pos.
RETR–	Internal/external timing source neg.
REXCE–	Enable EXC instruction decoder
REX00–	EXC instruction decoder - 0
REX01–	EXC instruction decoder - 1
REX02–	EXC instruction decoder - 2
REX03–	EXC instruction decoder - 3
REX04–	EXC instruction decoder - 4
REX05–	EXC instruction decoder - 5
REX06–	EXC instruction decoder - 6
RFIP +	Clock RMFL flip-flop
RFMN–	Execute memory-overflow interrupt neg.
RFRCK +	Free-running counter clock
RFRCK +	Input to free-running counter from frequency selection circuit
RFRCK–	Input to free-running counter from frequency selection circuit neg.
RFREN +	Preset term to RKFCL flip-flop
RFRY +	Internal RTC function-ready pos.
RFRY–	Internal RTC function-ready neg.
RFR00 +	Free-running counter output bit 00 pos.
RFR01 +	Free-running counter output bit 01 pos.
RFR01–	Free-running counter output bit 01 neg.
RFR02 +	Free-running counter output bit 02 pos.
RFR02–	Free-running counter output bit 02 neg.
RFR03 +	Free-running counter output bit 03 pos.
RFR04 +	Free-running counter output bit 04 pos.
RFR05 +	Free-running counter output bit 05 pos.
RFR05–	Free-running counter output bit 05 neg.
RFR06 +	Free-running counter output bit 06 pos.
RFR07 +	Free-running counter output bit 07 pos.

Mnemonic	Description
RFR08 +	Free-running counter output bit 08 pos.
RFR09 +	Free-running counter output bit 09 pos.
RFR10 +	Free-running counter output bit 10 pos.
RFR11 +	Free-running counter output bit 11 pos.
RFR12 +	Free-running counter output bit 12 pos.
RFR13 +	Free-running counter output bit 13 pos.
RFR14 +	Free-running counter output bit 14 pos.
RFR15 +	Free-running counter output bit 15 pos.
RICCL–	Output flip-flop following variable clock source neg.
RINT–	RTC executing interrupt neg.
RIR00–	Interval-selection register output bit 00 neg.
RIR01–	Interval-selection register output bit 01 neg.
RIR02–	Interval-selection register output bit 02 neg.
RIR03–	Interval-selection register output bit 03 neg.
RIR04–	Interval-selection register output bit 04 neg.
RIR05–	Interval-selection register output bit 05 neg.
RIR06–	Interval-selection register output bit 06 neg.
RIR07–	Interval-selection register output bit 07 neg.
RIR08–	Interval-selection register output bit 08 neg.
RIR09–	Interval-selection register output bit 09 neg.
RIR10–	Interval-selection register output bit 10 neg.
RISTB–	Variable interval interrupt to interrupt-generation logic
RIUA +	Internal RTC interrupt acknowledgment pos.
RIUA–	Internal RTC interrupt acknowledgment neg.
RRIUC +	Internal RTC interrupt clock
RIUJ +	Internal RTC interrupt jump
RJM +	Enable internal RTC interrupt jump
RJM–	Internal RTC interrupt jump jumper
RKFCL +	Free-running counter clock
RKFRY–	Clock data-transfer flip-flops
RKMFI +	K-input to memory overflow interrupt flip-flop
RKVIC +	Variable-interval-counter clock
RKVII +	Variable-interval-interrupt flip-flop clock
RK10K +	Clock 10 KHz flip-flop
RK660 +	660-nanosecond free-running clock pos.
RK660–	660-nanosecond free-running clock neg.
RLF +	Internal line frequency source pos.
RLF–	Internal line frequency source neg.
RLVIC–	Load variable-interval counter neg. true to load
RMFI +	Memory-overflow-interrupt flip-flop pos.
RMFI–	Memory-overflow-interrupt flip-flop neg.
RMFL +	Memory overflow latch flip-flop pos.
RMFL–	Memory overflow latch flip-flop pos.
RMOE +	Memory overflow enabling flip-flop
RMTFF +	Memory overflow test flip-flop pos.
ROUT +	Output data to I/O common logic pos.
RPDTO–	Preset data-transfer-out flip-flop
RPRM +	Internal RTC priority-in line
RPVIE–	Preset varible-interval-interrupt flip-flop
RRME–	Reset memory-overflow-enabler flip-flop
RRRMT–	RMTFF flip-flop reset
RRST +	Reset RTC pos.
RRST–	Reset RTC neg.
RRVIE–	Reset varible-interval-interrupt flip-flop
RSYRT–	Inversion of OSYRT
RTC–	REMT and RMTFF flip-flops clock
RTINT +	Enable interrupt request pos.
RTINT–	Enable interrupt request neg.

Mnemonic	Description
RTRST–	Reset clock-control logic
RTRSTB–	Reset control logic neg.
RVC00 +	Output of variable-interval counter bit 00 pos.
RVC00–	Output of variable-interval counter bit 00 neg.
RVC01 +	Output of variable-interval counter bit 01 pos.
RVC02 +	Output of variable-interval counter bit 02 pos.
RVC03 +	Output of variable-interval counter bit 03 pos.
RVC04 +	Output of variable-interval counter bit 04 pos.
RVC05 +	Output of variable-interval counter bit 05 pos.
RVC06 +	Output of variable-interval counter bit 06 pos.
RVC07 +	Output of variable-interval counter bit 07 pos.
RVC08 +	Output of variable-interval counter bit 08 pos.
RVC09 +	Output of variable-interval counter bit 09 pos.
RVC10 +	Output of variable-interval counter bit 10 pos.
RVC11 +	Output of variable-interval counter bit 11 pos.
RVICK +	Variable-interval-counter clock
RVICK +	Variable-interval-clock source
RVICLE +	Enable variable-interval load flip-flop pos.
RVICLE–	Enable variable-interval load flip-flop neg.
RVIC1 +	AND of RCA + RCB + RCC +
RVIE +	Enable variable-interval-interrupt flip-flop
RVII–	Variable-interval-interrupt flip-flop interrupt request neg.
RVIL +	Variable-interval-interrupt latch flip-flop pos.
RVIL–	Variable-interval-interrupt latch flip-flop neg.
RVI +	Variable-interval-interrupt flip-flop interrupt request pos.
R10KH +	10 KHz flip-flop pos.
R10KH–	10 KHz flip-flop neg.
R20KH +	20 KHz flip-flop pos.
R20KH–	20 KHz flip-flop neg.

6.4 MEMORY PROTECTION

Mnemonic	Description
BADJ–	Jump error flag
BADDF +	Overflow error flag
BADWT–	Write error flag
BAER–	Jump, write, or overflow error
BAFST +	Processor memory request flip-flop
BAFT1 +	First clock period of processor memory cycle
BANPT	Address error flag
BARST–	Memory protection reset
BDIEN +	Enable memory protection onto E-bus
BDIENA +	Repowered BDIEN +
BENWP +	Address error flag
BFAD +	Memory protection I/O address decoder
BIANN +	Memory protection memory address register
BIERS +	Set term for BIER
BIER +	I/O or halt instruction error flag
BINIO–	I/O instruction error flag
BINPT	Delayed addressing error flag
BINRS +	Interrupt response flag
BINTA +	Enable common logic E-bus interrupt response output
BINTE–	Memory protect interrupt priority output
BIOS +	Set term for BINIO-
BIWENS +	Jump-and-mark flag set
BIWENS–	Jump-and-mark flag reset
BIWEN–	Jump-and-mark flag
BKDIE +	BMWEN + clock

Mnemomic	Description
BKIAR–	Instruction address register clock
BKIA–	BANPT
BKIER–	Addressing-error flag clock
BKISA–	BIER
BKISB +	Memory-protection clock
BKLDL +	BPMA + clock
BKMWA +	BMWAB- and BMWAA- clock
BKMWE +	BDIEN + clock
BMPEN +	Memory protection enabled flip-flop
BMRNN +	Memory mask register
BMRQY–	Memory request
BMWAA–	Mask register write address bit A
BMWAB–	Mask register write address bit B
BMWEL–	Enable mask register lower addresses for writing
BMWEN +	Enable I/O for writing
BMWEU–	Enable mask register upper addresses for writing
BMWL +	Select lower mask register addresses for writing
BNPTR–	Address-error flag reset
BPMA +	Memory transfer to instruction register 1 flag
BRST–	Reset memory protection
BSPRO +	Memory segment protected
CACIDE +	Enable instruction decoder
CIDHLT +	Decode halt instruction
CIDIO +	Decode I/O instruction
CIDJMK +	Decode jump and mark instruction
CINMPC–	Execution instruction flag
DJUMP +	Processor jump instruction execution
IUAX +	Interrupt acknowledgment
MCRB +	Processor memory request
MFCO +	Memory free-running clock
MIMC1 +	Processor write-into-memory status flag
MRSIA–	Memory strobe complete
MTM1I +	Enable memory transfer to instruction register 1
MWLY +	Write into memory left byte
MYANN +	Memory address bus
OBNN–	Common logic E-bus
OBOUT–	Enable common logic E-bus output
OINT–	Memory protection internal interrupt
OIURX–	Memory protection interrupt request
WWRY +	Write into memory right byte

6.5 MEMORY PARITY

Mnemonic	Description
BFAD +	Device address decoder
BINTE +	Memory protection interrupt active
BRST–	System reset repowered
EADxx–	Parity-interrupt address drivers
EENB +	Enable parity-interrupt flip-flop
EINL +	Ninth bit into parity checker/generator (left byte)
EINR +	Ninth bit into parity checker/generator (right byte)
EINTR–	Enable parity-interrupt sequencer
EINT +	Parity-interrupt flip-flop
EINB +	Enable parity-priority out
EIODS +	Parity interrupt cycle
EIOD +	Parity-error interrupt flip-flop

Mnemonic	Description
EIUX1 +	Enable parity interrupt
EKENB	Enable parity interrupt flip-flop clock
EKRDD–	Delayed parity-error flip-flop clock
EKRD–	Parity-error flip-flop clock
ENTR1–	Parity option disabled by jumper
ERDL +	Parity check (left byte)
ERDR +	Parity check (right byte)
EREAD +	Enable parity-error flip-flop clock
ERERR–	Parity-error flip-flop direct reset
ERER +	Parity-error flip-flop
ERERS +	Parity-error flip-flop set
EWLPR +	Parity error left byte
EWRPR +	Parity error right byte
EWTL +	Input parity left byte
EWTR +	Input parity right byte
FINTE–	Power failure active
FOS–	Power-failure one-shot
MAKO +	Memory cycle for PMA
MWLY +	Memory left byte input
MWRY +	Memory right byte input
MYDxx	Memory data-bus bits
OBOUT–	Option board common I/O logic output driver enabler
OBxx–	I/O bus bit
OFRYX +	Interrupt address clock
OIUAX +	Interrupt cycle
OIUCX +	Interrupt clock
OIURX–	Parity interrupt request
PRNE–	Parity priority out
YDNM +	Memory acknowledgment

6.6 PRIORITY MEMORY ACCESS

Mnemonic	Description
AAxx–	PMA address-buffer bit xx
ABxxS +	PMA address-buffer bit xx (receiver output)
ACK	PMA OR gate
ACKEN	Acknowledgment clock enabled
ACKJ	PMA jumper
ACKx	Channel x acknowledgment
ACKxS	Channel x acknowledgment set
ACOMP	Compatible mode selected
ADDN	Memory cycle completed repowered
ADFx	Data-sequencer bit x
ADxS	Data-sequencer bit x set
ADxx	PMA data-buffer bit xx
ADxxL +	PMA data-buffer bit xx
ADxxL–	PMA data-buffer bit xx repowered
ADxxS	Memory data-buffer bit xx (receiver output)
AGO	PMA-bus GO delayed and converted
AGOL	GO-latch flip-flop
AGOLS	GO-latch flip-flop set
AGOS	GO pulse set
AHSM	Not used
AKEN	Acknowledgment enabled
AKENR	Acknowledgment enabled reset
AKMD	Memory data-buffer clock
AK165	Free-running 165-nanosecond clock
AK41	Free-running 41-nanosecond clock
AK82	Free-running 82-nanosecond clock

Mnemonic	Description
AMDCI	Memory-sequencer idle
AMDCx	Memory-sequencer state x
AMDEN	Memory data-bus enabled
AMFx	Memory-sequencer bit-x flip-flop
AM1A1	Memory-sequencer bit 1 OR set
AM1A2	Memory-sequencer bit 1 OR set
AM1E1	Memory-sequencer bit 1 AND set
AM1E2	Memory-sequencer bit 1 AND set
AM1S	Memory-sequencer bit 1 set
APDEN	PMA data-bus enabled
APRIx	Bit-x priority gate
ARDCI	Request-sequencer decoder idle
AREAD	Memory-sequencer output flip-flop
ARFx	Request-sequencer bit x
AROQ	82-nanosecond request flip-flop
AROQS	82-nanosecond request flip-flop set
ARQ	Request present
ARQA	Request flip-flop AND reset
ARQR	82-nanosecond request flip-flop reset
ARQx	Request bit-x flip-flop
ARQxS	Request bit-x (receiver output)
ARST	PMA reset
ARSTA	PMA reset (receiver output)
ART1S	Countdown-counter bit 1 set
ARTx	Countdown-counter bit x
AR123R–	Request-sequencer bits 1, 2, and 3 OR reset
ARxR	Request-sequencer bit-x flip-flop reset
ARxS	Request-sequencer bit-x flip-flop set
ASTRT +	Start flip-flop (not used)
ATGO	Countdown completed
CPMAST	Start PMA controllers (not used)
DBxx	Data-buffer bit xx
FINTE	Power-failure/restart active
GO	PMA controller acknowledgment
GOA	PMA controller acknowledgment (receiver output)
GOAD	GOA + delayed 30 nanoseconds
HOG	PMA continuous-request to memory
HOGA +	PMA continuous-request inverted
HOGA–	PMA continuous-request (receiver output)
LK82 +	Common-logic 82-nanosecond clock
MAKO	Memory-priority acknowledgment
MFCO–	Memory free-running clock
MHGY	PMA to HOG memory if PF/R inactive
MOCLK–	Common-logic free-running clock
MRQY	Memory-port priority request
MWLY	Memory-bus read/write left byte
MWRY	Memory-bus read/write right byte
MYABxx	Memory-address bit xx
MYDBxx	Memory data-bus bit xx
NHCO +	Common-logic 165-nanosecond clock
ORQM	165-nanosecond request flip-flop
PAxx	PMA-bus address bit xx
PDxx	PMA-bus data bit xx
PMRS	PMA-controller to reset PMA
READ	PMA-bus output
READA	PMA-bus output (receiver output)
REQx	PMA request x
START	PMA-bus start (not used)
SYRT-P	PMA-bus reset (controller cleared)
YDNM	Memory cycle completed

SPERRY UNIVAC PARTS LIST

SPERRY UNIVAC IS A DIVISION OF SPERRY CORPORATION

MFG CODE	ISSUE DATE	CONTROL		DOC NO.	AC	SHEET
J ,W ,D	81/12/28	W 777	PL	W0101332	16	1

TITLE: OPTION BOARD OPTION

PCC	ADC	PCD	COMM CODE	CA	U/M	ST	TYPE	SIZE	CLASS
					EA	A	M	A	A

FIND NO.	QUANTITY REQUIRED	U/M	PCC	PART OR IDENT NO. DOCUMENT NO.	DASH	EIR AND PART DESCRIPTION INFORMATION	ECC	ST	CHG
Z028				W 95039	-01	PL REV AF, PIC REV AE, RANGE 00 - 08 EIR RELEASED 81/12/11			*
Z027				W 94796	-02	PL REV AE, PIC REV AE, RANGE 00 - 08 EIR RELEASED 81/05/12			
*****	*******	***	**	**********	****	********** COMMON DATA **********			
14	1	EA		W8600015	-00	LABEL, IDENTIFICATION BLK LTR WHT BKGD		A	
R001		X		6601891	-00	CABLE INSTL - 7 IN CHASSIS		A	
R002		X		6601890	-00	CABLE INSTL - 14 IN CHASSIS		A	
S001		X		SW01163	-00	MARKING,MECHANICAL SPECS DSGN-F/GENERAL IDENTIFICATION		A	
S002		X		W9800887	-00	V70 SER MICRO WD FLOW CHARTS		A	
*****	*******	***		**********	****	SEE TABULATION ON DRAWING VAR DATA PART - 00 *********		A	
1	1	EA		6603052	-00	PC ASSEMBLY = OPTION BD		A	*
*****	*******	***		**********	****	SEE TABULATION ON DRAWING VAR DATA PART - 01 *********		A	
2	1	EA		6603052	-00	PC ASSEMBLY = OPTION BD		A	*
*****	*******	***		**********	****	SEE TABULATION ON DRAWING VAR DATA PART - 02 *********		A	
3	1	EA		6603053	-00	PC ASSEMBLY - OPTION BD *		A	*
6	1	EA		W5300720	-72	CABLE ASSEMBLY, PMA 72 IN LONG		A	
7	1	EA		W5700260	-05	CONN, PRINTED CIRCUIT, ELEC SCR MTD 65 FIXED SOCKETS		A	
*****	*******	***		**********	****	SEE TABULATION ON DRAWING VAR DATA PART - 03 *********		A	
6	1	EA		W5300720	-72	CABLE ASSEMBLY, PMA 72 IN LONG		A	
7	1	EA		W5700260	-05	CONN, PRINTED CIRCUIT, ELEC SCR MTD 65 FIXED SOCKETS		A	
8	1	EA		6603053	-00	PC ASSEMBLY - OPTION BD *		A	*
*****	*******	***		**********	****	SEE TABULATION ON DRAWING VAR DATA PART - 04 *********		A	
9	1	EA		6603052	-00	PC ASSEMBLY - OPTION BD		A	*
*****	*******	***		**********	****	SEE TABULATION ON DRAWING VAR DATA PART - 05 *********		A	
6	1	EA		W5300720	-72	CABLE ASSEMBLY, PMA 72 IN LONG		A	
7	1	EA		W5700260	-05	CONN, PRINTED CIRCUIT, ELEC SCR MTD 65 FIXED SOCKETS		A	

SPERRY UNIVAC PARTS LIST

SPERRY UNIVAC IS A DIVISION OF SPERRY CORPORATION

MFG CODE	ISSUE DATE	CONTROL		DOC NO.		SHEET	
J ,W ,D	81/12/28	W 777	PL	WD101332	16	2	*

TITLE	PCC	ADC	PCD	COMM CODE	CA	U/M	ST	TYPE	SIZE	CLASS	
OPTION BOARD OPTION						EA	A	M	A	A	*

FIND NO.	QUANTITY REQUIRED		U/M	PCC	PART OR IDENT NO. DOCUMENT NO.	DASH	EIR AND PART DESCRIPTION INFORMATION	ECC	ST	CHG
10	1		EA		6603053	-00	PC ASSEMBLY - OPTION BD *		A	*
*****	*******	***		*	**********	****	SEE TABULATION ON DRAWING VAR DATA PART - 06 *********		A	
11	1		EA		6603052	-00	PC ASSEMBLY - OPTION BD		A	*
*****	*******	***		*	**********	****	SEE TABULATION ON DRAWING VAR DATA PART - 07 *********		A	
12	1		EA		6603052	-00	PC ASSEMBLY - OPTION BD		A	*
*****	*******	***		*	**********	****	SEE TABULATION ON DRAWING VAR DATA PART - 08 *********		A	
13	1		EA		6603052	-00	PC ASSEMBLY - OPTION BD		A	*

DWG NO. W0101332

REVISIONS

REV	EN	CHG CODE	DESCRIPTIONS	DR	APPD
Z	87093		REV "STANDARD CONFIGURATION" SHEET 9 WAS E59-E109	RM	
AA	87195		SHT 14 ADDED TOP AND PIN 1A TO CONNECTOR	RM	
AB	87224		ADDED -001 DASH NUMBER CONFIG. TO SHT'S 11 AND 12	RM	8.3.78
AD	W9454L-01		UPDATED FORMAT, DOC NO. WAS 01A1332	DV	
AE	W9479G.02		REVISED PER EIR.	R.B.	

PART NO. SEE TAB
~~IDENT NO.~~

NEXT ASSEMBLY			MODEL NO.	SPERRY UNIVAC
DR	G. R. Luther	10/17/72	CODE IDENT NO. 21101	TITLE OPTION BOARD OPTION
CHK	Duston	10/19/72		
DSGN	G. R. Luther	10/19/72		
ENGR	A. Whitcomb	10/19/72		
APPD	A. Whitcomb	10/19/72		
APPD				

THIS DOCUMENT MAY CONTAIN PROPRIETARY INFORMATION AND SUCH INFORMATION MAY NOT BE DISCLOSED TO OTHERS FOR ANY PURPOSE OR USED TO PRODUCE THE ARTICLE OR SUBJECT, WITHOUT PERMISSION FROM SPERRY UNIVAC.

SIZE	DWG NO.	REV
A	W0101332	AE

SHEET 1 OF 16

DASH NUMBER CHART

PART NUMBER	REMARKS (OPTIONS INCLUDED)
W0101332-00	Common Logic, I/O, RTC, TTY/CRT, PFR
W0101332-01	Common Logic, I/O, RTC, TTY/CRT, PFR, MEM PARITY, MEM PROTECT
W0101332-02	Common Logic, I/O, RTC, TTY/CRT, PFR, MEM PARITY, MEM PROTECT, PMA
W0101332-03	Common Logic, I/O RTC, TTY/CRT, PFR, MEM PARITY, PMA
W0101332-04	Common Logic, I/O, RTC, CRT, PFR, MEM PARITY, MEM PROTECT
W0101332-05	Common Logic, I/O, RTC, CRT, PFR, MEM PARITY, MEM PROTECT, PMA
W0101332-06	I/O Only
W0101332-07	Common Logic, I/O MEM PARITY
W0101332-08	Common Logic, I/O, RTC, TTY/CRT, PFR, MEM PARITY

NOTES: UNLESS OTHERWISE SPECIFIED

1.0 This drawing provides for an option board (DM357) to be used in the S.U.. V70 series.

2.0 Identify per (5001) (REFERENCE FIG. 1, 2, & 3).

3.0 Table I lists all of the discretionary wiring features of the option board along with the standard configuration as manufactured and tested by SU . In the Table, the column headings are defined as follows:

DASH NO. -	The dash number(s) of the board assembly on which the feature exists.
FUNCTION -	The name of the feature under consideration.
LOCATION -	Name of the discretionary wiring location as specified on the board assembly drawing W4400619.
TYP -	Type of component or electrical connection to be installed or removed.
STD. CONFIG'S. -	The way the feature will be wired by SU at completion of unit test.
ALT. CONFIG'S. -	The way the feature may be wired on completion of system test. This wiring is specified by the SU systems engineer.

4.0 For installation of W0101332-00 and -01, -04 and -08, see Figure 1.

5.0 For installation of W0101332-02, -03 and -05, see Figure 2.

6.0 For installation of W0101332-06 AND - 07, SEE FIGURE 3.

7.0 For DM357 Revision T Board, modify all points calling for jumpers or clips to "A24" to read "B50". Second, modify all points calling for jumpers to "B50" to read "A24". NOTE: This paragraph only applies to DM357 Revision T Boards.

8.0 In V74 systems, configure option board for operation on B-Port with Memory Map (reference Table I).

9.0 All systems using parity must have the option board built on DM357 Rev. "BC" and prior, reworked per EN #84708 and EN #84709.

10.0 Jumper E109 to E110 should be removed if a floating point processor is installed.

11.0 FOR SYSTEM CONFIGURATION OF 7"CHASSIS, SEE (R001).

12.0 FOR SYSTEM CONFIGURATION OF 14"CHASSIS, SEE (R002).

CODE IDENT NO. 21101

W01O1332

SH 5 OF 16

REV AE

TABLE I.

DASH NUMBER -00	-01	-02	-03	-04	-05	-06	-07	-08	FUNCTION	WIRING DESCRIPTION LOCATION	WIRING DESCRIPTION TYPE	STANDARD CONFIGURATION	ALTERNATE CONFIGURATIONS
X	X	X	X	X	X			X	PFR Enable/Disable	E7-E8 E9-E10	Clip	Enabled (No jumpers)	Add jumper to E7-E8 and E9-E10 to disable PFR logic.
X	X	X	X	X	X			X	RTC Interval Interrupt Clock	E14	W/W or Clip	10 KHz Clock Clip E13-E14	Delete E13-E14 Clip 1. For line frequency add Wire E17-E14. 2. For external clock add Wire E15-E14.
X	X	X	X	X	X			X	RTC Free Running Counter Clock Enable	E102-E103	Clip	Install clip to enable free running counter:	Remove clip for test only
X	X	X	X	X	X			X	RTC Free Running Counter Clock	E18	W/W	10 KHz Clock E13-E18 Jumper	Delete E13-E18 Jumper. 1. For line frequency add clip E17-E18. 2. For Interval Interrupt Rate add Wire E16-E18. 3. For external clock add Wire E15-E18.
X	X	X	X	X	X			X	RTC - Disable Interrupts on JMRK Instruction	E11-E12	Clip	Do not disable RTC interrupts on JMRK instruction. (No jumper installed)	Install jumper clip at E11-E12 for systems that requires RTC interrupts to be disabled on execution of a JMRK instruction. Required for Vortex.
X	X	X	X	X	X	X	X	X	Interrupt Clock Rate	E2, E3, E4, E5	Clip	990 nanosecond period (slow rate) Jumper E2-E3 and E4-E5.	For 660 nanosecond period (fast rate) delete E2-E3 and E4-E5. Add E1-E2, E5-E6.
X	X	X	X	X	X			X	TTY/CRT Controller Enable/Disable	E96-E97	Clip	Enable (No Jumper)	Add jumper to disable TTY/CRT controller option.
X	X	X	X	X	X	X	X	X	Memory Time Out Logic	A24, A25, B49, B50, B51, C25	Clip or W/W	Clip B25 to B49, A25 to B25. A24 to B51	See Sheet 16

CODE IDENT NO. 21101

W01Q1332

SH 6 OF 16

REV AE

TABLE I

DASH NUMBER 00	10	20	30	40	50	60	70	80	FUNCTION	WIRING DESCRIPTION LOCATION	WIRING DESCRIPTION TYPE	STANDARD CONFIGURATION	ALTERNATE CONFIGURATIONS
X	X	X	X					X	TTY/CRT Controller Rate (Bits/Sec)	E21 thru E43	Clip	110 Bits/Sec - For wiring refer to table in alternate configurations.	
X	X	X	X	X	X			X	TTY/CRT Clock Enable	E107 to E108	Clip	Installed	Remove only for Abet Testing

Rate (Bits per Sec)	E42 to E43	E40 to E41	E38 to E39	E36 to E37	E34 to E35	E32 to E33	E30 to E31
*110	X	X	X	X		X	X
150	X		X	X	X	X	
300		X	X		X	X	X
1200			X	X			X
2400			X		X		

Rate (Bits per Sec)	E28 to E29	E26 to E27	E24 to E25	E22 to E23	E20 to E21	Peripheral Connected
*110	X		X		X	TTY
150	X	X	X	X		
300	X					
1200	X	X	X		X	
2400	X	X	X			CRT

96A0039-000B

TABLE I

DASH NUMBER -00	-01	-02	-03	-04	-05	-06	-07	-08	FUNCTION	WIRING DESCRIPTION LOCATION	WIRING DESCRIPTION TYPE	STANDARD CONFIGURATION	ALTERNATE CONFIGURATIONS
X	X	X	X					X	TTY/CRT Stop Bits in Serial Word	E44-E45	Clip	TTY Operation: 2 Stop Bits (No Jumper Installed)	CRT Operation: Select 1 Stop Bit by adding jumper clip at E44-E45
X	X	X	X					X	TTY Current Loop	E46-E47 (R84) E48-E49 (R54) E50-E51 (R85)	Res/Clip Res/Clip Res/Clip	TTY Operation: 20 Milliamp current loop. (Standard) No resistors or clips installed at E46-E47, E48-E49, or E50-E51	1. To obtain 60 milliamp current loop for TTY operation (non-standard) Remove R50 (51K Ω) and install resistors listed in table below: SU P/N — Description — Remarks W650 2500-203 — 20KΩ, 1/4W, 5% — R50 W650 2010-202 — 2KΩ, 2W, 5% — R84 W650 2010-202 — 2KΩ, 2W, 5% — R54 W650 1010-390 — 39Ω, 1W, 5% — R85 2. To obtain 30 milliamp current loop for CRT operation, jumper E46-E47 and E48-E49. Do not install resistor or clip at E50-E51.
				X	X				CRT Operation			Incorporate Option Board Mod Kit W01Q1653 (-04 and -05) can be made only from -01 and -02 boards respectively which were constructed using DM357 'AT' revision or earlier).	None

CODE IDENT NO 21101

W01Q1332

SH 7 OF 16

REV AE

96A0039-000B

TABLE I

DASH NUMBER									FUNCTION	WIRING DESCRIPTION		STANDARD CONFIGURATION	ALTERNATE CONFIGURATIONS
-00	-01	-02	-03	-04	-05	-06	-07	-08		LOCATION	TYPE		
X	X	X	X					X	TTY/CRT Output Circuit Bias Resistor	E113, E114, E115	Clip	E114-E115 Installed: R50 (51K) Selected (Applies only to DM357 AU Rev Boards and on)	E113-E115 Installed: R91 (10K) Selected (Applies Only to DM357 'AU' Rev Boards and on).
X	X	X	X					X	TTY/CRT Current Source Bias Resistor	E118, E119, E120	Clip	E118-E119 Installed: R53 (470Ω) Selected (Applies only to DM357 AU Rev Boards and on)	E119-E120 Installed: R94 (330Ω) Selected (Applies only to DM357 'AU' Rev. Boards and on.)
X	X	X	X	X	X			X	CRT Output Voltage Select	S1	Toggle	+12V position to be used with CRT option model no. T2838-00, T2838-01, and T2838-02 (applies only to DM357 BP Rev boards and on)	-12V position to be used with CRT option model no. T2817-00, T2817-01, and T2817-02. (applies only to DM357 BP Rev boards and on)

CODE IDENT NO. 21101

W0101332

SH 8 OF 16

REV AE

96A0039-000B

TABLE I

DASH NUMBER									FUNCTION	WIRING DESCRIPTION		STANDARD CONFIGURATION	ALTERNATE CONFIGURATIONS
-00	-01	-02	-03	-04	-05	-06	-07	-08		LOCATION	TYPE		
X	X	X	X	X	X		X	X	I/O Bus Priority Wiring	See Table in Alternate Configurations	W/W	Jumper: E91-E52 E92-E53 E95-E110 E54-E109 E110-E109	Priority Wiring Locations: J3 E52 O—9 E53 O—11 E54 O—13 E55 O—15 E56 O—17 E57 O—19 E58 O—21 E59 O—23 E60 O—25 J5 E106 O—29 E92 O RTC Priority In E95 O RTC Priority Out E91 O Parity Priority Out (on -01 THRU -05 boards only) E93 O PFR Priority Out (On -00 boards only) E110 O FLOATING POINT PRIORITY IN PRIX-I E109 O FLOATING POINT PRIORITY OUT PRIX-I

CODE IDENT NO. 21101

W01001332

SH 2 OF 16

REV AE

TABLE I

DASH NUMBER -00	-01	-02	-03	-04	-05	-06	-07	-08	FUNCTION	WIRING DESCRIPTION: LOCATION	WIRING DESCRIPTION: TYPE	STANDARD CONFIGURATION	ALTERNATE CONFIGURATIONS
	X	X	X	X	X		X	X	Parity Enable/ Disable	E61-E62	Clip	Disabled (Jumper installed at E61-E62)	To enable option remove jumper located at E61-E62.
	X	X	X	X	X		X	X	Parity Interrupt Address	E63-E64(Bit03) E65-E66(Bit04) E67-E68(Bit05) E69-E70(Bit06) E71-E72(Bit07)	Clip Clip Clip Clip Clip	Interrupt to $(370)_8$ (All jumpers installed)	Any address $(XX0)_8$ ending in zero is possible. XX = $(00)_8$ through $(37)_8$. A jumper installed causes a logical "1" to occur in the corresponding bit position of the interrupt address. Note: For Vortex, Use address $(10)_8$, *i.e.* only E63-E64 installed.
	X	X	X	X	X		X	X	Parity Memory Bus Selection	An Bn Cn o o o n = 26 and 28 thru 47	Clip	Memory Bus B selected An to Bn Jumpers installed at An-Bn (n = 26 and 28 thru 47)	Bus A may be selected by connecting as shown An Bn Cn (n= 26 and 28 thru 47) o ⌒ o Memory Protect and parity must both select same bus.
	X	X		X	X				Memory Protect Enable (MP)	E98 E100 E99 E101	Clip	Jumpers installed E98 to E99 E100 to E101	Remove clips when Memory Map installed in system.
	X	X		X	X				Memory Protect (MP) Memory Bus Selection	An Bn Cn o o o (n=1 thru 10, 12, 14, 16, 18, 20, 22, 24, 28, 29)	Clip	Memory bus B selected by jumpering An to Bn, except for 24 (see location for "N" numbers to be jumpered). Jumper 24 installed between B24 to C24.	Bus A may be selected by connecting as shown An Bn Cn except for o ⌒ o jumper 24 (see location for "N" numbers). Install jumper 24 between A24-B24, Note: MP and parity must both be on the same memory bus. Note: A24-B24 jumper may be second jumper on Pin A24 (Ref. "Memory Time Out Logic", Sheet 4.) Remove jumper clip 24 when map is installed in system.

CODE IDENT NO. 21101

W01Ø1332

SH 10 OF 16

REV AE

96A0039-000B

CODE IDENT NO. 21101

TABLE I

DASH NUMBER 00	01	02	03	04	05	06	07	08	FUNCTION	WIRING DESCRIPTION LOCATION	WIRING DESCRIPTION TYPE	STANDARD CONFIGURATION	ALTERNATE CONFIGURATIONS
		X	X		X				PMA Data Transfer Mode	E73-E80	Clip	620 compatible mode enabled on all priority levels. See table to right.	See nested table below
	X	X	X		X				PMA Hog Mode	A27 B27 C27 o o o	Clip	PMA can lockout port A and hog port B (Jumper installed at A27-B27)	1 If hog mode is not to be used, delete jumper A27-B27. No jumper should be on B27-C27. 2 For applications in which memory map controls the hog mode delete A27-B27 and add B27-C27.
X	X	X	X	X	X	X	X	X	PMA Memory Request	A25 B25 C25 o o o	Clip	Install clip between B25 and A25 to supply memory request line to PMA.	When memory map is not installed on "B" port, jumper B25 to C25.

Priority Level	Location	MODE: 620 Compatible
1	E73-E74 E81-E82	X 0
2	E75-E76 E83-E84	X 0
3	E77-E78 E85-E86	X 0
4	E79-E80 E87-E88	X 0

X = Jumper Installed
0 = No Jumper Installed

W01Q1332

SH 1 OF 16

REV AE 1

TABLE I

DASH NUMBER -00	-01	-02	-03	-04	-05	-06	-07	-08	FUNCTION	WIRING DESCRIPTION: LOCATION	WIRING DESCRIPTION: TYPE	STANDARD CONFIGURATION	ALTERNATE CONFIGURATIONS
		X	X		X				PMA and processor shared port (PMA higher priority than processor)	E89-E90	Clip	Port B may be shared between PMA and a processor. (No jumper installed). With this configuration do not install jumper between E89-E90.	For dual port applications (processor on Port A and P.M.A. on Port B) add the jumper to E89-E90. Not available on V72 or V74.
X	X	X	X				X	X	PMA address bits 9 thru 15	An Bn Cn o o o n = 11, 13, 15, 17, 19, 21, 23	Clip	Memory Bus "B" selected by jumpering Bn to Cn	For systems with memory map on "Port B" select by jumpering An to Bn.

CODE IDENT NO. 21101

W01Ø1332

SH /2 OF /6

REV AE

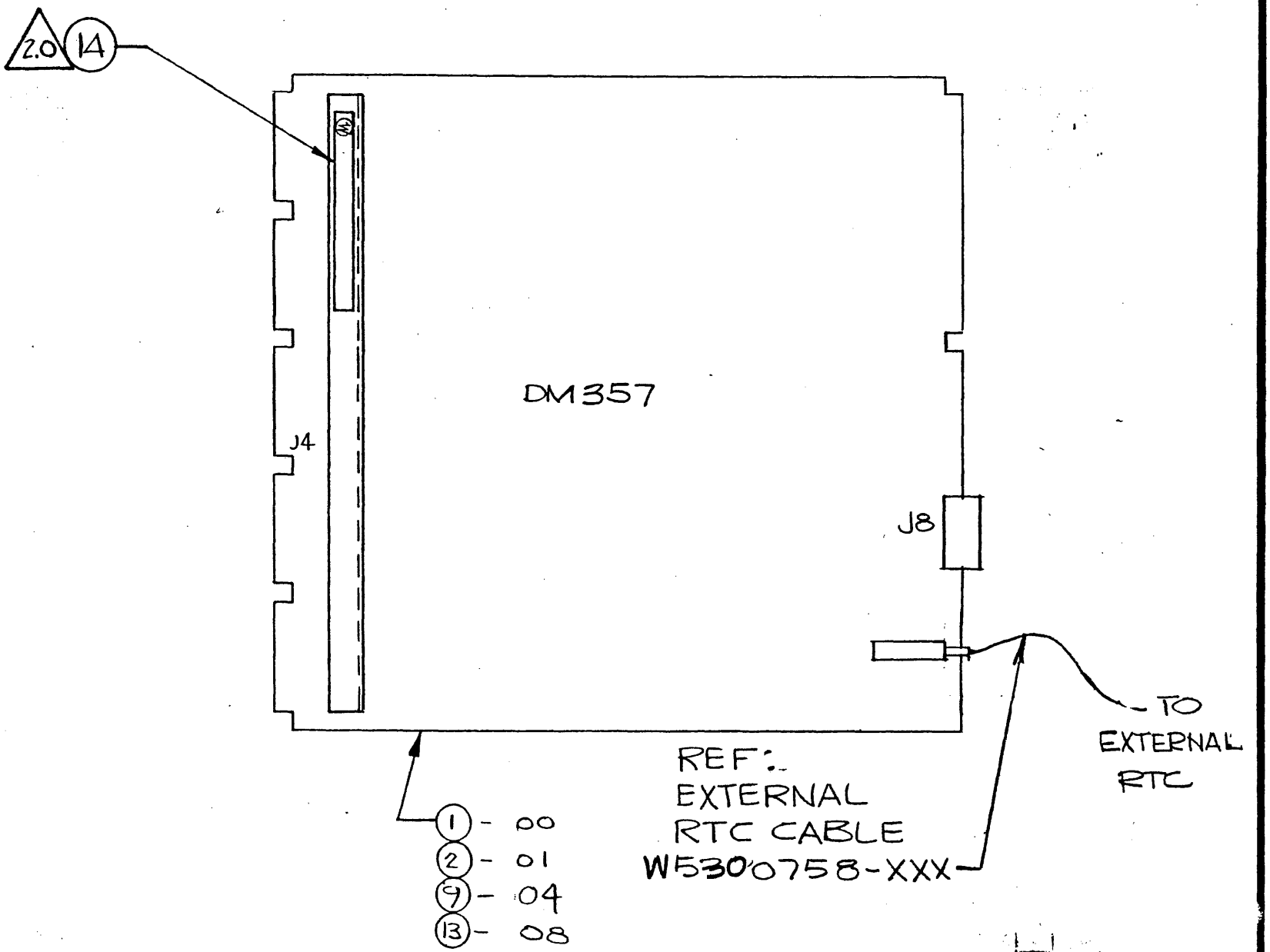

FIGURE 1
W0101332 —00, —01, —04, —08

CODE IDENT NO. 21101
W0101332
SH 13 OF 16
REV AE

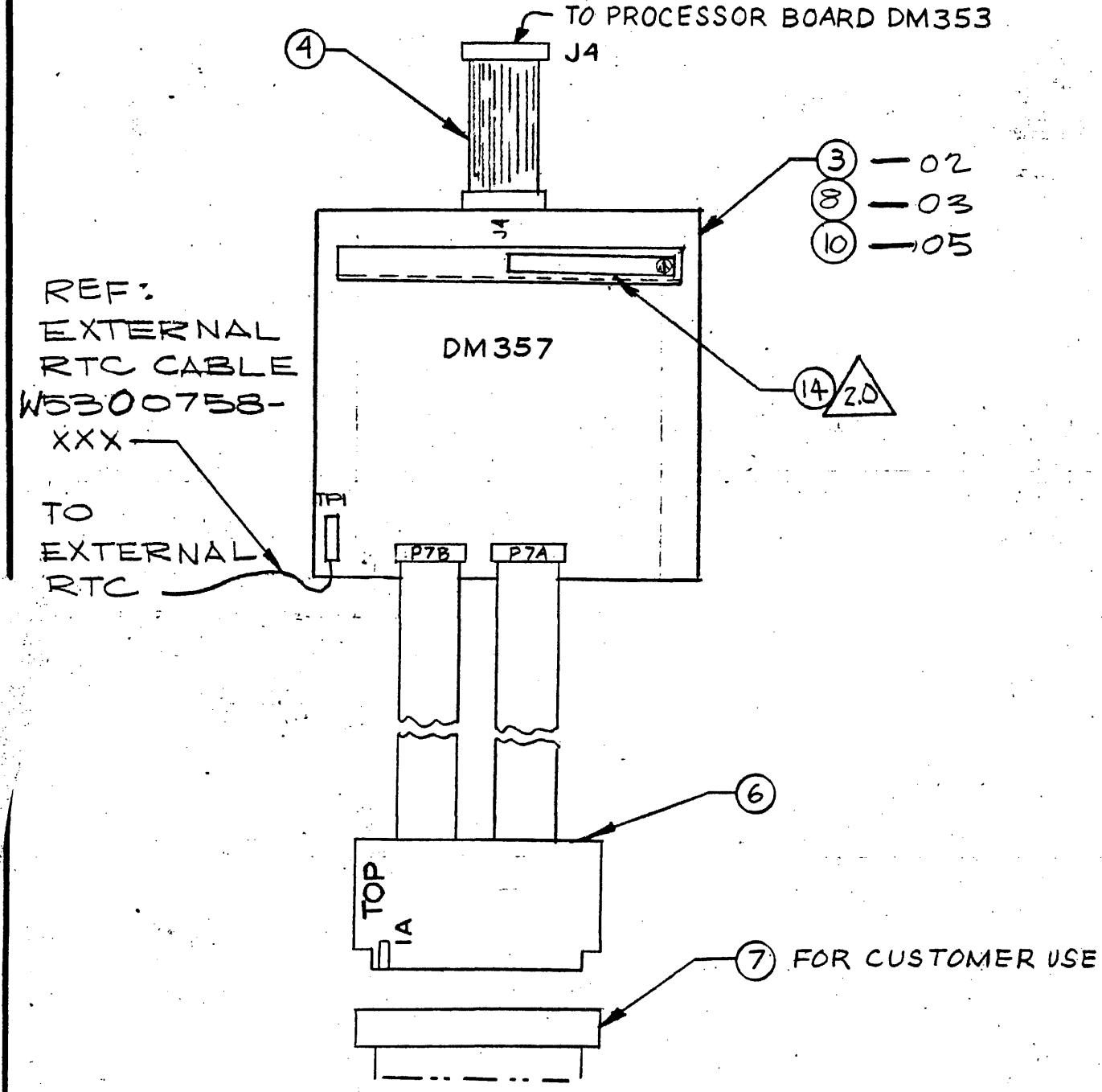

FIGURE 2
WO101332 — 02, — 03, — 05

	CODE IDENT NO. 21101		W01.01332	AE
			SH 14 OF 16	REV

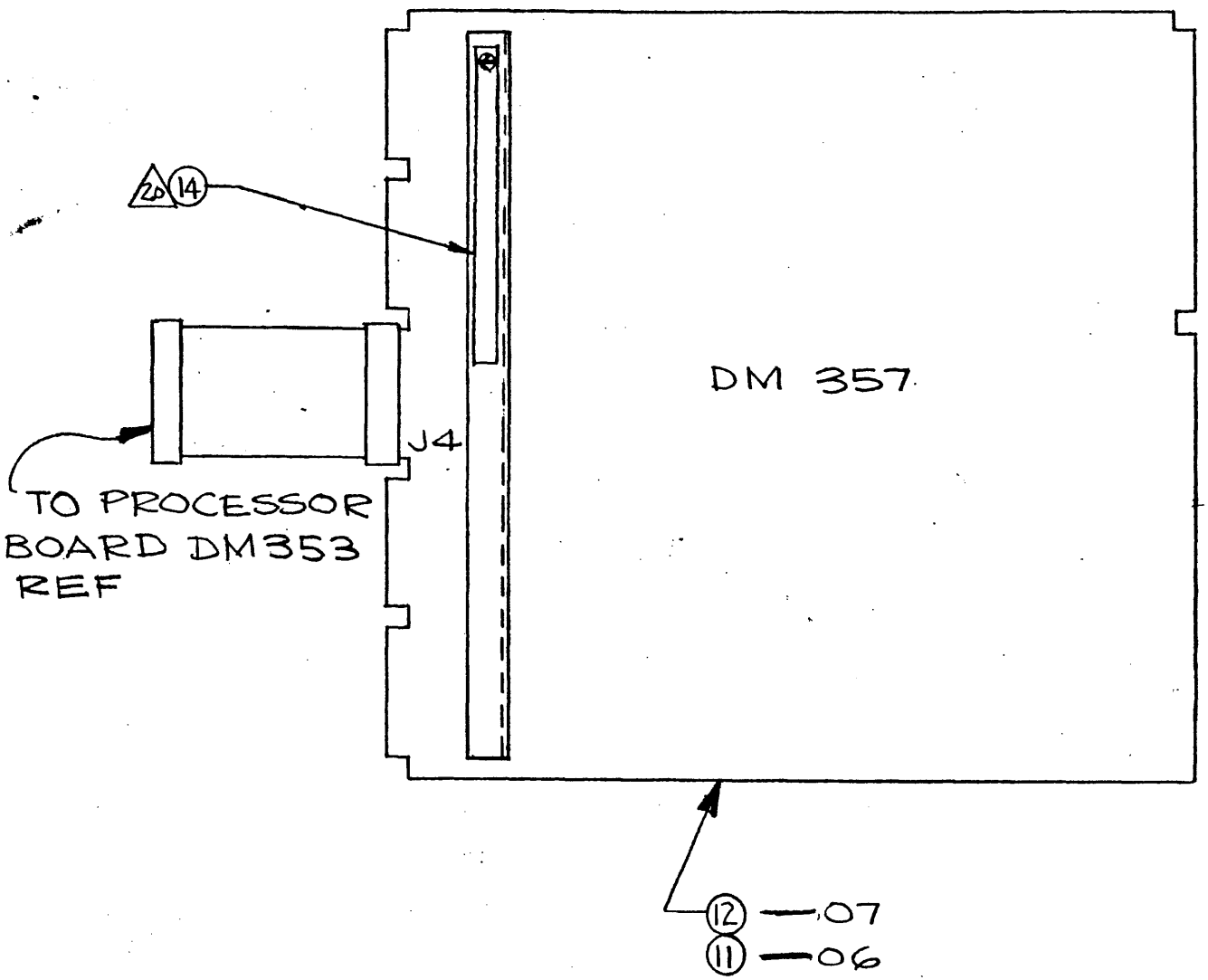

FIGURE 3
W0101332—06 & —07

Memory Time-Out

1. No Map in system

   A24 (MRQYA) to B51 (MRQPTA)
   C25 (MRQYB) to B49 (MRQPTB)
   B25 (MRQY) to C25 (MRQYB)

2. With 256K Map on A Port

   B50 (MRMYA) to B51 (MRQPTA)
   C25 (MRQYB) to B49 (MRQPTB)

3. With MAC, Mega Map, and Cache

   A24 (MRQYA) to B51 (MRQPTA)
   B50 (MRMYA) to B49 (MRQPTB)

4. Mega Map and Cache

   A24 to B51
   A25 to B25
   B25 to B49
   B50 (MRMYA) to B49 (MRQPTB)

SPERRY UNIVAC PARTS LIST

SPERRY UNIVAC IS A DIVISION OF SPERRY CORPORATION

MFG CODE	ISSUE DATE	CONTROL		DOC NO.	AC	SHEET
W	81/12/28	W 777	PL	6603052	1	1

TITLE	PCC	ADC	PCD	COMM CODE	CA	U/M	ST	TYPE	SIZE	CLASS
PC ASSEMBLY - OPTION BD						EA	A	AP	D	A

FIND NO.	QUANTITY REQUIRED	U/M	PCC	PART OR IDENT NO. DOCUMENT NO.	DASH	EIR AND PART DESCRIPTION INFORMATION	ECC	ST	CHG
Z000				W 95039	-01	PL REV -, PIC REV -, RANGE 00 - 00 EIR RELEASED 81/12/11			*
*****	******* ***		*	**********	****	********** VAR DATA PART - 00 *********		A	
1	1	EA		W4000528	-00	PC BOARD - OPTION DM357		A	*
2	2	EA	I	5036516	-00	INTEGRATED CIRCUIT DIGITAL TTLS 74S10 * GT NAND 3IN		A	*
3	6	EA	I	5036506	-00	INTEGRATED CIRCUIT DIGITAL TTLS 74S11 * GT AND 3IN		A	*
4	1	EA	I	2892079	-00	INTEGRATED CIRCUIT DIGITAL TTLS 74S20 * GT NAND 4IN		A	*
6	1	EA	I	2892081	-00	INTEGRATED CIRCUIT DIGITAL TTLS 74S64 * GT AOI		A	*
8	11	EA	I	9004323	-01	INTEGRATED CIRCUIT DIGITAL TTL 74H103 FF JK DUAL	D	I	*
10	2	EA	I	2899583	-00	INTEGRATED CIRCUIT DIGITAL TTL 74157 * MUX 2INPUT		A	*
14	2	EA		4916220	-00	OPTOELECTRONIC COUPLER INFRARED LED & SIL NPN TSTR		A	*
15	1	EA		W4900348	-00	INTEGRATED CIRCUIT DIGITAL CMOS 6402 UART		A	*
16	1	EA		W4900182	-00	INTEGRATED CIRCUIT DIGITAL TTLS 74S113 FF DUAL JK ET		A	*
17	1	EA	I	3008182	-00	INTEGRATED CIRCUIT DIGITAL TTL 7402 * GT NOR 2IN		I	*
18	2	EA		8000041	-00	INTEGRATED CIRCUIT -IC181 TTL 74198 * REG SHF 8BT		I	*
19	4	EA	I	2899587	-00	INTEGRATED CIRCUIT DIGITAL TTL 74175 * FF D QUAD		A	*
22	2	EA		W4900175	-00	INTEGRATED CIRCUIT, DIGITAL TTLS 82S62 9BT PARTY GEN		A	*
23	1	EA	I	9001407	-01	INTEGRATED CIRCUIT DIGITAL TTL 4006 DECO BIN 10F8	D	I	*
25	10	EA	I	5036515	-00	INTEGRATED CIRCUIT DIGITAL TTLH 74H00 * GT NAND 2IN		I	*
26	7	EA	I	2899571	-00	INTEGRATED CIRCUIT DIGITAL TTLS 74S00 * GT NAND 2IN		A	*
27	6	EA	I	3013354	-00	INTEGRATED CIRCUIT DIGITAL TTLH 74H01 * GT NAND 2IN		I	*
28	7	EA	I	2899412	-00	INTEGRATED CIRCUIT LINEAR TTL 7403 * GT NAND 2IN		A	*
30	4	EA		W4900139	-00	INTEGRATED CIRCUIT DIGITAL TTLH 74H05 GATE HEX INV		I	*
33	1	EA		W4900554	-01	INTEGRATED CIRCUIT DIGITAL TTLH 74H10 GT NAND 3IN		A	*
34	9	EA	I	2899573	-00	INTEGRATED CIRCUIT DIGITAL TTLH 74H11 * GT AND 3IN		I	*
35	1	EA	I	3008089	-00	INTEGRATED CIRCUIT TTL 7413 * GT NAND 4IN		I	*

SPERRY UNIVAC PARTS LIST

SPERRY UNIVAC IS A DIVISION OF SPERRY CORPORATION

MFG CODE	ISSUE DATE	CONTROL	DOC NO.		SHEET	
W	81/12/28	W 777	PL 6603052	1	2	*

TITLE: PC ASSEMBLY - OPTION BD

PCC	ADC	PCD	COMM CODE	CA	U/M	ST	TYPE	SIZE	CLASS
					EA	A	AP	D	A *

FIND NO.	QUANTITY REQUIRED	U/M	PCC	PART OR IDENT NO. DOCUMENT NO.	DASH	EIR AND PART DESCRIPTION INFORMATION	ECC	ST	CHG
36	1	EA	I	3008187	-00	INTEGRATED CIRCUIT DIGITAL TTL 7420 * GT NAND 4IN		I	*
37	1	EA	I	3013355	-00	INTEGRATED CIRCUIT DIGITAL TTLH 74H21 * GT AND 4IN		I	*
38	1	EA		3013468	-00	INTEGRATED CIRCUIT DIGITAL TTLH 74H30 * GT NAND 8IN		I	*
39	16	EA		W4900128	-01	INTEGRATED CIRCUIT, DIGITAL TTL 7438 GT NAND 2I SEL		I	*
40	1	EA	I	5036517	-00	INTEGRATED CIRCUIT DIGITAL TTLH 74H40 * GT NAND BUFF		I	*
41	1	EA	I	3008190	-00	INTEGRATED CIRCUIT DIGITAL TTL 7442 * DCDR 4-10LN		I	*
42	3	EA		W4900093	-01	INTEGRATED CIRCUIT, DIGITAL TTLH 74H50 GT AOI EXP		A	*
43	1	EA	I	5036519	-00	INTEGRATED CIRCUIT DIGITAL TTL 74H51 AND-OR-INVTR		I	*
45	2	EA	I	3013357	-00	INTEGRATED CIRCUIT DIGITAL TTLH 74H54 * GT AOI		I	*
46	10	EA	I	3008194	-00	INTEGRATED CIRCUIT DIGITAL TTL 7474 * FF D DUAL		I	*
47	11	EA	I	5036157	-00	INTEGRATED CIRCUIT DIGITAL TTL 74H74 DUAL D FF		A	*
48	2	EA	I	3008195	-00	INTEGRATED CIRCUIT DIGITAL TTL 7475 * REG LATCH 4BT		I	*
49	4	EA	I	3006204	-00	INTEGRATED CIRCUIT - IC7 TTL 7493 * CNTR 4BT		I	*
50	3	EA	I	9004321	-01	INTEGRATED CIRCUIT DIGITAL TTL 74H108 FF JK DUAL	D	I	*
51	2	EA	I	3007952	-00	INTEGRATED CIRCUIT DIGITAL TTL 74123 * MVB DUAL RGT		I	*
52	1	EA	I	4915632	-00	INTEGRATED CIRCUIT DIGITAL TTL 74150 MLPX 1 OF 16		I	*
53	8	EA		2899585	-00	INTEGRATED CIRCUIT DIGITAL TTL 74170 * REG FILE 4X4		A	*
54	3	EA	I	3007845	-00	INTEGRATED CIRCUIT DIGITAL TTL 74193 * CNTR 4BT U/D		I	*
55	6	EA		2510193	-00	INTEGRATED CIRCUIT,DIGITAL TTL 74197 HS MONO COUNT		I	*
56	2	EA	I	3008031	-00	INTEGRATED CIRCUIT DIGITAL TTL 74122 * MVB RGT W/C		I	*
57	3	EA		W4900010	-00	INTEGRATED CIRCUIT, DIGITAL DTL 844/944 SELECTED IC		A	*
58	14	EA	I	5036505	-00	INTEGRATED CIRCUIT DIGITAL TTLH 74H08 * GT AND 2IN		I	*
59	3	EA	I	5036522	-00	INTEGRATED CIRCUIT DIGITAL TTL 3003 * GT OR 2IN		I	*
61	1	EA		W8001000	-04	DELAY LINE 30.00NSEC TD 3TERM 390 OHM		A	*
				REF DES	(1)	DL1,			

SPERRY UNIVAC PARTS LIST

SPERRY UNIVAC IS A DIVISION OF SPERRY CORPORATION

MFG CODE	ISSUE DATE	CONTROL	PL	DOC NO.	AC	SHEET
W	81/12/28	W 777	PL	6603052	1	3 *

TITLE	PCC	ADC	PCD	COMM CODE	CA	U/M	ST	TYPE	SIZE	CLASS
PC ASSEMBLY - OPTION BD						EA	A	AP	D	A *

FIND NO.	QUANTITY REQUIRED	U/M	PCC	PART OR IDENT NO. DOCUMENT NO.	DASH	EIR AND PART DESCRIPTION INFORMATION	ECC	ST	CHG
63	18	EA		W6502500	362	RES,FXD,COMPOSITION,1/4W,5% 3600 OHMS		A	*
				REF DES	(1)	R1-R18,			
64	4	EA		W6502500	121	RES,FXD,COMPOSITION,1/4W,5% 120 OHMS		A	*
				REF DES	(1)	R19-R21,R86,			
67	4	EA		W7100004	101	CAPACITOR, FIXED, CERAMIC DIEL 50V +80 - 20% 1 UF		A	*
				REF DES	(1)	C1,C2,C8,C9,			
68	2	EA		W6502500	123	RES,FXD,COMPOSITION,1/4W,5% 12K		A	*
				REF DES	(1)	R31,R56,			
69	28	EA		W6502500	471	RES,FXD,COMPOSITION,1/4W,5% 470 OHMS		A	*
				REF DES	(1)	R22,R23,R34,R27-R30, (2) R39,R62-R78,R57,R58,			
				REF DES	(3)	R80,			
70	2	EA		W6502500	752	RES,FXD,COMPOSITION,1/4W,5% 7500 OHMS		A	*
				REF DES	(1)	R25,R26,			
72	1	EA		W6502500	182	RES,FXD,COMPOSITION,1/4W,5% 1800 OHMS		A	*
				REF DES	(1)	R37,			
73	23	EA		W6502500	102	RES,FXD,COMPOSITION,1/4W,5% 1000 OHMS		A	*
				REF DES	(1)	R24,R33,R35,R36,R38, (2) R41,R43,R45,R47,R48,			
				REF DES	(3)	R60,R61,R83,R87-R90, (4) R95,R96,R98-R101,			
74	1	EA		W6502500	303	RES,FXD,COMPOSITION,1/4W,5% 30K		A	*
				REF DES	(1)	R42,			
75	1	EA		W6502500	223	RES,FXD,COMPOSITION,1/4W,5% 22K		A	*
				REF DES	(1)	R44,			
76	1	EA		W6502500	203	RES,FXD,COMPOSITION,1/4W,5% 20K		A	*
				REF DES	(1)	R46,			
77	2	EA		W6502500	151	RES,FXD,COMPOSITION,1/4W,5% 150 OHMS		A	*

SPERRY UNIVAC PARTS LIST

SPERRY UNIVAC IS A DIVISION OF SPERRY CORPORATION

MFG CODE	ISSUE DATE	CONTROL		DOC NO.		SHEET	
W	81/12/28	W 777	PL	6603052	1	4	*

TITLE	PCC	ADC	PCD	COMM CODE	CA	U/M	ST	TYPE	SIZE	CLASS	
PC ASSEMBLY - OPTION BD						EA	A	AP	D	A	*

FIND NO.	QUANTITY REQUIRED	U/M	PCC	PART OR IDENT NO. DOCUMENT NO.	DASH	EIR AND PART DESCRIPTION INFORMATION	ECC	ST	CHG
				REF DES	(1)	R32,R49,			
78	1	EA		W6502500	513	RES,FXD,COMPOSITION,1/4W,5% 51K		A	*
				REF DES	(1)	R50,			
79	1	EA		W6502500	512	RES,FXD,COMPOSITION,1/4W,5% 5100 OHMS		A	*
				REF DES	(1)	R92,			
80	2	EA		W6502010	202	RESISTOR, FIXED, COMPOSITION 2 K 5% 2W		A	*
				REF DES	(1)	R51,R55,			
81	1	EA		W6501010	471	RESISTOR, FIXED, COMPOSITION 470 OHMS 5% 1W		A	*
				REF DES	(1)	R53,			
82	1	EA		W6501010	101	RESISTOR, FIXED, COMPOSITION 100 OHMS 5% 1W		A	*
				REF DES	(1)	R52,			
84	1	EA		W6502500	391	RES,FXD,COMPOSITION,1/4W,5% 390 OHMS		A	*
				REF DES	(1)	R59,			
85	1	EA	C	4916657	-06	CAP FXD CER DIEL 50V +80 - 20% 100K PF		A	*
				REF DES	(1)	C4,			
86	1	EA		W7100352	154	CAPACITOR, FIXED, TANT DIEL 35V 10% 150K PF		A	*
				REF DES	(1)	C3,			
87	1	EA		W6901500	221	CAPACITOR, FIXED, MICA DIEL 500V 5% 220 PF		A	*
				REF DES	(1)	C5,			
88	1	EA		W6901500	151	CAPACITOR, FIXED, MICA DIEL 500V 5% 150 PF		A	*
				REF DES	(1)	C6,			
89	1	EA		W6901500	330	CAPACITOR, FIXED, MICA DIEL 500V 5% 33 PF		A	*
				REF DES	(1)	C7,			
90	65	EA		6630012	-05	CAPACITOR, FIXED, CERAMIC DIEL 50V +80 - 20% 10K PF		A	*
				REF DES	(1)	C12,C15,C16,C19,C21, (2) C23,C25-C27,C29,C31,			

SPERRY UNIVAC PARTS LIST
SPERRY UNIVAC IS A DIVISION OF SPERRY CORPORATION

MFG CODE	ISSUE DATE	CONTROL	DOC NO.	AC	SHEET
W	81/12/28	W 777	PL 6603052	1	5 *

TITLE: PC ASSEMBLY - OPTION BD

PCC	ADC	PCD	COMM CODE	CA	U/M	ST	TYPE	SIZE	CLASS
					EA	A	AP	D	A *

FIND NO.	QUANTITY REQUIRED	U/M	PCC	PART OR IDENT NO. DOCUMENT NO.	DASH	EIR AND PART DESCRIPTION INFORMATION	ECC	ST	CHG
				REF DES	(3)	C32,C34-C36,C40,C43- (4) C45,C47,C49,C51,C53,			
				REF DES	(5)	C55,C57,C59,C63,C64, (6) C66,C67,C70,C71,C75,			
				REF DES	(7)	C76-C80,C83-C85,C87, (8) C91-C93,C95,C98,C101-			
				REF DES	(9)	C104,C106,C109-C111, (10) C113,C114,C116,C117,			
				REF DES	(11)	C119,C122,C124-C126, (12) C128,			
92	2	EA		W7701017	-00	SEMICONDUCTOR DEVICE, DIODE 200MA		A	*
				REF DES	(1)	CR1,CR2,			
93	2	EA	D	2899056	-00	SEMICONDUCTOR DEVICE DIODE PWR IO 1 A VR+ 200V SR 2857-00		A	*
				REF DES	(1)	CR3,CR4			
94	1	EA		W7600019	-00	TRANSISTOR PNP VCBO 150V 5.6MW BETA20		A	*
				REF DES	(1)	Q1,			
96	1	EA		4916806	-02	RESISTOR NETWORK FIXED 28ELEMT 3 W 2% 200AND 300		A	*
97	1	EA		W4900078	-00	INTEGRATED CIRCUIT, DIGITAL TTLH 74H55 GT AOI EXP 4IN		A	*
98	1	EA		W4900195	-00	INTEGRATED CIRCUIT 24 DIL - PLASTIC OR CERAMIC		A	*
99	1	EA		W4900195	-01	INTEGRATED CIRCUIT 24 DIL - PLASTIC OR CERAMIC		A	*
100	4	EA	I	5036504	-00	INTEGRATED CIRCUIT DIGITAL TTLS 74S04 * GT HEX INVERT		A	*
101	20	EA	I	3007755	-00	INTEGRATED CIRCUIT DIGITAL TTLH 74H04 * GT HEX INVERT		I	*
102	2	EA	I	3008186	-00	INTEGRATED CIRCUIT DIGITAL TTL 7410 * GT NAND 3IN		I	*
103	3	EA	I	5036146	-00	INTEGRATED CIRCUIT DIGITAL TTLS 74S74 * FF DUAL D		A	*
104	1	EA	I	9004633	-01	INTEGRATED CIRCUIT DIGITAL TTLS 74S112 * FF DUAL JK		A	*
105	2	EA		W4900127	-00	INTEGRATED CIRCUIT DIGITAL TTL 74161 CNTR 4BT BIN		A	*
106	1	EA		W2200105	-03	SPACER .25/.38 DIA X .406 4-40 THD		A	*
107	1	EA		W2200105	-00	SPACER .38 DIA X .120		A	*
108	249	EA		6630081	-01	CONTACT, ELECTRICAL, WIRE WRAP PC BD W WRAP BRZ GOLD		A	*
110	1	EA		W5700296	-00	CONNECTOR RECTANGULAR ELEC 9 FIXED SOCKETS RECP		A	*

SPERRY UNIVAC PARTS LIST

SPERRY UNIVAC IS A DIVISION OF SPERRY CORPORATION

MFG CODE	ISSUE DATE	CONTROL		DOC NO.		SHEET	
W	81/12/28	W 777	PL	6603052	1	6	*

TITLE: PC ASSEMBLY - OPTION BD

PCC	ADC	PCD	COMM CODE	CA	U/M	ST	TYPE	SIZE	CLASS	
					EA	A	AP	D	A	*

FIND NO.	QUANTITY REQUIRED	U/M	PCC	PART OR IDENT NO. DOCUMENT NO.	DASH	EIR AND PART DESCRIPTION INFORMATION		ECC	ST	CHG
				REF DES	(1)	J8,				
111	1	EA		W0400709	-00	BOARD STIFFENER,FRONT			A	*
112	1	EA		W0400796	-00	STIFFENER REAR			A	*
113	71	EA		W2600038	-00	CLIP, RETAINING	.006 THK, BERYLLIUM COPPER		A	*
114	1	EA		W7800108	-00	SWITCH, TOGGLE, LEVER	2 POSITION		A	*
				REF DES	(1)	S1,				
115	1	EA		W5800189	-00	CONNECTOR, COAXIAL, ELECTRICAL	1000 VOLTS, 50 OHMS		A	*
				REF DES	(1)	TP1,				
116	2	EA		W5700296	-02	CONNECTOR RECTANGULAR ELEC	BRACKET		A	*
119	AR	IN		W5400001	124	INSULATION SLEEVING, ELEC	SIZE 24 BLACK .022 ID		A	*
120	2	EA		W2100062	-01	SCREW MACHINE PAN HEAD	SST PASS XREC 2-56 .188		A	*
121	2	EA		W2202560	-01	WASHER, FLAT	SST PASS.025THK .089ID .2190D		A	*
122	2	EA		W2202561	-02	WASHER, LOCK, FLAT	NO. 2		A	*
126	1	EA		W6502500	103	RES,FXD,COMPOSITION,1/4W,5%	10K		A	*
				REF DES	(1)	R91,				
127	1	EA		W6501010	331	RESISTOR, FIXED, COMPOSITION	330 OHMS 5% 1W		A	*
				REF DES	(1)	R94,				
132	2	EA		W5800195	-05	SOCKET INTEGRATED CIRCUIT	24TERM 2 INLINE PC BOARD TIN		A	*
134	1	EA		W4900169	-01	INTEGRATED CIRCUIT,DIGITAL	TTLS 74S74 * FF D SELECTED		I	*
135	1	EA		W8600053	-02	LABEL, IDENTIFICATION	TTY CRT 700 RED LTR WHT BKGD		A	*
136	AR	IN		W5300333	-90	WIRE ELECTRICAL	30SLD 300V PVD WHT		A	*
137	1	EA		W7800114	-00	SWITCH ASSY	TOGGLE ROCKER 4SPDT 30V		A	*
F001		X		W9100401	-02	LOGIC DIAG, OPTION BD DM357	*		A	*
S001		X		SW01163	-00	MARKING,MECHANICAL SPECS	DSGN-F/GENERAL IDENTIFICATION		A	*
S002		X		SW00536	-00	THREADED FASTENERS SPECS	DSGN-SELECTION-INSTALLATION		A	*

SPERRY UNIVAC PARTS LIST

SPERRY UNIVAC IS A DIVISION OF SPERRY CORPORATION

MFG CODE	ISSUE DATE	CONTROL		DOC NO.	AC	SHEET
W	81/12/28	W 777	PL	6603053	1	1

TITLE	PCC	ADC	PCD	COMM CODE	CA	U/M	ST	TYPE	SIZE	CLASS
PC ASSEMBLY - OPTION BD						EA	A	AP	D	A

FIND NO.	QUANTITY REQUIRED		U/M	PCC	PART OR IDENT NO. DOCUMENT NO.	DASH	EIR AND PART DESCRIPTION INFORMATION			ECC	ST	CHG
Z000					W 95039	-01	PL REV -, PIC REV -, RANGE 00 - 00 EIR RELEASED 81/12/11					*
*****	*******	***		*	**********	****	* VAR DATA PART - 00 *********				A	
1	1		EA		W4000528	-00	PC BOARD - OPTION DM357				A	*
2	4		EA	I	5036516	-00	INTEGRATED CIRCUIT DIGITAL	TTLS	74S10 * GT NAND 3IN		A	*
3	10		EA	I	5036506	-00	INTEGRATED CIRCUIT DIGITAL	TTLS	74S11 * GT AND 3IN		A	*
4	3		EA	I	2892079	-00	INTEGRATED CIRCUIT DIGITAL	TTLS	74S20 * GT NAND 4IN		A	*
6	2		EA	I	2892081	-00	INTEGRATED CIRCUIT DIGITAL	TTLS	74S64 * GT AOI		A	*
8	13		EA	I	9004323	-01	INTEGRATED CIRCUIT DIGITAL	TTL	74H103 FF JK DUAL	D	I	*
9	3		EA		W4900171	-00	INTEGRATED CIRCUIT DIGITAL	TTLS	74S114 FF JK DUAL ET		A	*
10	2		EA	I	2899583	-00	INTEGRATED CIRCUIT DIGITAL	TTL	74157 * MUX 2INPUT		A	*
12	1		EA		W4900151	-00	INTEGRATED CIRCUIT, DIGITAL	TTLH	93H72 REG SHF 4BT		A	*
13	7		EA		5036524	-00	INTEGRATED CIRCUIT DIGITAL	TTL	3404 * FF LATCH 6BT		I	*
14	2		EA		4916220	-00	OPTOELECTRONIC COUPLER		INFRARED LED & SIL NPN TSTR		A	*
15	1		EA		W4900348	-00	INTEGRATED CIRCUIT DIGITAL	CMOS	6402 UART		A	*
16	1		EA		W4900182	-00	INTEGRATED CIRCUIT DIGITAL	TTLS	74S113 FF DUAL JK ET		A	*
17	1		EA	I	3008182	-00	INTEGRATED CIRCUIT DIGITAL	TTL	7402 * GT NOR 2IN		I	*
18	2		EA		8000041	-00	INTEGRATED CIRCUIT -IC181	TTL	74198 * REG SHF 8BT		I	*
19	4		EA	I	2899587	-00	INTEGRATED CIRCUIT DIGITAL	TTL	74175 * FF D QUAD		A	*
21	16		EA		W4900176	-00	INTEGRATED CIRCUIT, DIGITAL	TTL	8T14 LINE RCVR		A	*
22	2		EA		W4900175	-00	INTEGRATED CIRCUIT, DIGITAL	TTLS	82S62 93T PARTY GEN		A	*
23	1		EA	I	9001407	-01	INTEGRATED CIRCUIT DIGITAL	TTL	4006 DECO BIN 1OF8	D	I	*
25	12		EA	I	5036515	-00	INTEGRATED CIRCUIT DIGITAL	TTLH	74H00 * GT NAND 2IN		I	*
26	10		EA	I	2899571	-00	INTEGRATED CIRCUIT DIGITAL	TTLS	74S00 * GT NAND 2IN		A	*
27	6		EA	I	3013354	-00	INTEGRATED CIRCUIT DIGITAL	TTLH	74H01 * GT NAND 2IN		I	*
28	7		EA	I	2899412	-00	INTEGRATED CIRCUIT LINEAR	TTL	7403 * GT NAND 2IN		A	*

SPERRY UNIVAC PARTS LIST

SPERRY UNIVAC IS A DIVISION OF SPERRY CORPORATION

MFG CODE	ISSUE DATE	CONTROL		DOC NO.		SHEET	
W	81/12/28	W 777	PL	6603053	1	2	*

TITLE: PC ASSEMBLY - OPTION BD

PCC	ADC	PCD	COMM CODE	CA	U/M	ST	TYPE	SIZE	CLASS	
					EA	A	AP	D	A	*

FIND NO.	QUANTITY REQUIRED	U/M	PCC	PART OR IDENT NO. DOCUMENT NO.	DASH	EIR AND PART DESCRIPTION INFORMATION				ECC	ST	CHG
30	4	EA		W4900139	-00	INTEGRATED CIRCUIT DIGITAL	TTLH	74H05	GATE HEX INV		I	*
33	1	EA		W4900554	-01	INTEGRATED CIRCUIT DIGITAL	TTLH	74H10	GT NAND 3IN		A	*
34	9	EA	I	2899573	-00	INTEGRATED CIRCUIT DIGITAL	TTLH	74H11	* GT AND 3IN		I	*
35	1	EA	I	3008089	-00	INTEGRATED CIRCUIT	TTL	7413	* GT NAND 4IN		I	*
36	1	EA	I	3008187	-00	INTEGRATED CIRCUIT DIGITAL	TTL	7420	* GT NAND 4IN		I	*
37	8	EA	I	3013355	-00	INTEGRATED CIRCUIT DIGITAL	TTLH	74H21	* GT AND 4IN		I	*
38	1	EA		3013468	-00	INTEGRATED CIRCUIT DIGITAL	TTLH	74H30	* GT NAND 8IN		I	*
39	34	EA		W4900128	-01	INTEGRATED CIRCUIT, DIGITAL	TTL	7438	GT NAND 2I SEL		I	*
40	1	EA	I	5036517	-00	INTEGRATED CIRCUIT DIGITAL	TTLH	74H40	* GT NAND BUFF		I	*
41	1	EA	I	3008190	-00	INTEGRATED CIRCUIT DIGITAL	TTL	7442	* DCDR 4-10LN		I	*
42	3	EA		W4900093	-01	INTEGRATED CIRCUIT, DIGITAL	TTLH	74H50	GT AOI EXP		A	*
43	1	EA	I	5036519	-00	INTEGRATED CIRCUIT DIGITAL	TTL	74H51	AND-OR-INVTR		I	*
44	1	EA	I	9004329	-01	INTEGRATED CIRCUIT DIGITAL	TTL	74H53	GT AOI 2223IN	D	I	*
45	2	EA	I	3013357	-00	INTEGRATED CIRCUIT DIGITAL	TTLH	74H54	* GT AOI		I	*
46	10	EA	I	3008194	-00	INTEGRATED CIRCUIT DIGITAL	TTL	7474	* FF D DUAL		I	*
47	11	EA	I	5036157	-00	INTEGRATED CIRCUIT DIGITAL	TTL	74H74	DUAL D FF		A	*
48	2	EA	I	3008195	-00	INTEGRATED CIRCUIT DIGITAL	TTL	7475	* REG LATCH 4BT		I	*
49	4	EA	I	3006204	-00	INTEGRATED CIRCUIT - IC7	TTL	7493	* CNTR 4BT		I	*
50	6	EA	I	9004321	-01	INTEGRATED CIRCUIT DIGITAL	TTL	74H108	FF JK DUAL	D	I	*
51	2	EA	I	3007952	-00	INTEGRATED CIRCUIT DIGITAL	TTL	74123	* MVB DUAL RGT		I	*
52	1	EA	I	4915632	-00	INTEGRATED CIRCUIT DIGITAL	TTL	74150	MLPX 1 OF 16		I	*
53	8	EA		2899585	-00	INTEGRATED CIRCUIT DIGITAL	TTL	74170	* REG FILE 4X4		A	*
54	3	EA	I	3007845	-00	INTEGRATED CIRCUIT DIGITAL	TTL	74193	* CNTR 4BT U/D		I	*
55	6	EA		2510193	-00	INTEGRATED CIRCUIT,DIGITAL	TTL	74197	HS MONO COUNT		I	*
56	2	EA	I	3008031	-00	INTEGRATED CIRCUIT DIGITAL	TTL	74122	* MVB RGT W/C		I	*

SPERRY UNIVAC PARTS LIST

SPERRY UNIVAC IS A DIVISION OF SPERRY CORPORATION

MFG CODE	ISSUE DATE	CONTROL		DOC NO.	AC	SHEET	
W	81/12/28	W 777	PL	6603053	1	3	*

TITLE	PCC	ADC	PCD	COMM CODE	CA	U/M	ST	TYPE	SIZE	CLASS	
PC ASSEMBLY - OPTION BD						EA	A	AP	D	A	*

FIND NO.	QUANTITY REQUIRED	U/M	PCC	PART OR IDENT NO. DOCUMENT NO.	DASH	EIR AND PART DESCRIPTION INFORMATION	ECC	ST	CHG
57	3	EA		W4900010	-00	INTEGRATED CIRCUIT, DIGITAL DTL 844/944 SELECTED IC		A	*
58	16	EA	I	5036505	-00	INTEGRATED CIRCUIT DIGITAL TTLH 74H08 * GT AND 2IN		I	*
59	3	EA	I	5036522	-00	INTEGRATED CIRCUIT DIGITAL TTL 3003 * GT OR 2IN		I	*
60	3	EA	I	2899586	-00	INTEGRATED CIRCUIT DIGITAL TTL 74174 * FF HEX D		A	*
61	2	EA		W8001000	-04	DELAY LINE 30.00NSEC TD 3TERM 390 OHM		A	*
				REF DES	(1)	DL1,DL2			
63	18	EA		W6502500	362	RES,FXD,COMPOSITION,1/4W,5% 3600 OHMS		A	*
				REF DES	(1)	R1-R18,			
64	4	EA		W6502500	121	RES,FXD,COMPOSITION,1/4W,5% 120 OHMS		A	*
				REF DES	(1)	R19-R21,R86,			
67	4	EA		W7100004	101	CAPACITOR, FIXED, CERAMIC DIEL 50V +80 - 20% 1 UF		A	*
				REF DES	(1)	C1,C2,C8,C9,			
68	2	EA		W6502500	123	RES,FXD,COMPOSITION,1/4W,5% 12K		A	*
				REF DES	(1)	R31,R56,			
69	30	EA		W6502500	471	RES,FXD,COMPOSITION,1/4W,5% 470 OHMS		A	*
				REF DES	(1)	R22,R23,R34,R27-R30, (2) R39,R62,R63-R81,R57,			
				REF DES	(3)	R58,			
70	2	EA		W6502500	752	RES,FXD,COMPOSITION,1/4W,5% 7500 OHMS		A	*
				REF DES	(1)	R25,R26,			
72	1	EA		W6502500	182	RES,FXD,COMPOSITION,1/4W,5% 1800 OHMS		A	*
				REF DES	(1)	R37,			
73	24	EA		W6502500	102	RES,FXD,COMPOSITION,1/4W,5% 1000 OHMS		A	*
				REF DES	(1)	R24,R33,R35,R36,R38, (2) R41,R43,R45,R47,R48,			
				REF DES	(3)	R60,R61,R83,R87-R90, (4) R95-R101,			
74	1	EA		W6502500	303	RES,FXD,COMPOSITION,1/4W,5% 30K		A	*

SPERRY UNIVAC PARTS LIST

SPERRY UNIVAC IS A DIVISION OF SPERRY CORPORATION

MFG CODE	ISSUE DATE	CONTROL		DOC NO.	SHEET
W	81/12/28	W 777	PL	6603053	1 4 *

TITLE: PC ASSEMBLY - OPTION BD

PCC	ADC	PCD	COMM CODE	CA	U/M	ST	TYPE	SIZE	CLASS
					EA	A	AP	D	A *

FIND NO.	QUANTITY REQUIRED	U/M	PCC	PART OR IDENT NO. DOCUMENT NO.	DASH	EIR AND PART DESCRIPTION INFORMATION	ECC	ST	CHG
				REF DES	(1)	R42,			
75	1	EA		W6502503	223	RES,FXD,COMPOSITION,1/4W,5% 22K		A	*
				REF DES	(1)	R44,			
76	1	EA		W6502500	203	RES,FXD,COMPOSITION,1/4W,5% 20K		A	*
				REF DES	(1)	R46,			
77	2	EA		W6502503	151	RES,FXD,COMPOSITION,1/4W,5% 150 OHMS		A	*
				REF DES	(1)	R32,R49,			
78	1	EA		W6502500	513	RES,FXD,COMPOSITION,1/4W,5% 51K		A	*
				REF DES	(1)	R50,			
79	1	EA		W6502500	512	RES,FXD,COMPOSITION,1/4W,5% 5100 OHMS		A	*
				REF DES	(1)	R92,			
80	2	EA		W6502010	202	RESISTOR, FIXED, COMPOSITION 2 K 5% 2W		A	*
				REF DES	(1)	R51,R55,			
81	1	EA		W6501013	471	RESISTOR, FIXED, COMPOSITION 470 OHMS 5% 1W		A	*
				REF DES	(1)	R53,			
82	1	EA		W6501010	101	RESISTOR, FIXED, COMPOSITION 100 OHMS 5% 1W		A	*
				REF DES	(1)	R52,			
84	2	EA		W6502500	391	RES,FXD,COMPOSITION,1/4W,5% 390 OHMS		A	*
				REF DES	(1)	R59,R82			
85	1	EA	C	4916657	-06	CAP FXD CER DIEL 50V +80 - 20% 100K PF		A	*
				REF DES	(1)	C4,			
86	1	EA		W7100352	154	CAPACITOR, FIXED, TANT DIEL 35V 10% 150K PF		A	*
				REF DES	(1)	C3,			
87	1	EA		W6901500	221	CAPACITOR, FIXED, MICA DIEL 500V 5% 220 PF		A	*
				REF DES	(1)	C5,			

SPERRY UNIVAC PARTS LIST

SPERRY UNIVAC IS A DIVISION OF SPERRY CORPORATION

MFG CODE	ISSUE DATE	CONTROL		DOC NO.	AC	SHEET	
W	81/12/28	W 777	PL	6603053	1	5	*

TITLE	PCC	ADC	PCD	COMM CODE	CA	U/M	ST	TYPE	SIZE	CLASS	
PC ASSEMBLY - OPTION BD						EA	A	AP	D	A	*

FIND NO.	QUANTITY REQUIRED	U/M	PCC	PART OR IDENT NO. DOCUMENT NO.	DASH	EIR AND PART DESCRIPTION INFORMATION	ECC	ST	CHG
88	1	EA		W6901500	151	CAPACITOR, FIXED, MICA DIEL 500V 5% 150 PF		A	*
				REF DES	(1)	C6,			
89	1	EA		W6901500	330	CAPACITOR, FIXED, MICA DIEL 500V 5% 33 PF		A	*
				REF DES	(1)	C7,			
90	65	EA		6630012	-05	CAPACITOR, FIXED, CERAMIC DIEL 50V +80 - 20% 10K PF		A	*
				REF DES	(1)	C12,C15,C16,C19,C21, (2) C23,C25-C27,C29,C31,			
				REF DES	(3)	C32,C34-C36,C40,C43- (4) C45,C47,C49,C51,C53,			
				REF DES	(5)	C55,C57,C59,C63,C64, (6) C66,C67,C70,C71,C75-			
				REF DES	(7)	C80 C83-C85,C87,C91- (8) C93,C95,C98,C101-			
				REF DES	(9)	C104,C106,C109-C111, (10) C113,C114,C116,C117,			
				REF DES	(11)	C119,C122,C124-C126, (12) C128,			
92	2	EA		W7701017	-00	SEMICONDUCTOR DEVICE, DIODE 200MA		A	*
				REF DES	(1)	CR1,CR2,			
93	2	EA	D	2899056	-00	SEMICONDUCTOR DEVICE DIODE PWR IO 1 A VR+ 200V SR 2857-00		A	*
				REF DES	(1)	CR3,CR4			
94	1	EA		W7600019	-00	TRANSISTOR PNP VCBO 150V 5.6MW BETA20		A	*
				REF DES	(1)	Q1,			
96	5	EA		4916806	-02	RESISTOR NETWORK FIXED 28ELEMT 3 W 2% 200AND 300		A	*
97	1	EA		W4900078	-00	INTEGRATED CIRCUIT, DIGITAL TTLH 74H55 GT AOI EXP 4IN		A	*
98	1	EA		W4900195	-00	INTEGRATED CIRCUIT 24 DIL - PLASTIC OR CERAMIC		A	*
99	1	EA		W4900195	-01	INTEGRATED CIRCUIT 24 DIL - PLASTIC OR CERAMIC		A	*
100	5	EA	I	5036504	-00	INTEGRATED CIRCUIT DIGITAL TTLS 74S04 * GT HEX INVERT		A	*
101	24	EA	I	3007755	-00	INTEGRATED CIRCUIT DIGITAL TTLH 74H04 * GT HEX INVERT		I	*
102	2	EA	I	3008186	-00	INTEGRATED CIRCUIT DIGITAL TTL 7410 * GT NAND 3IN		I	*
103	6	EA	I	5036146	-00	INTEGRATED CIRCUIT DIGITAL TTLS 74S74 * FF DUAL D		A	*

SPERRY UNIVAC PARTS LIST

SPERRY UNIVAC IS A DIVISION OF SPERRY CORPORATION

MFG CODE	ISSUE DATE	CONTROL	DOC NO.	SHEET
W	81/12/28	W 777	PL 6603053 1	6 *

TITLE: PC ASSEMBLY - OPTION BD

PCC	ADC	PCD	COMM CODE	CA	U/M	ST	TYPE	SIZE	CLASS
					EA	A	AP	D	A *

FIND NO.	QUANTITY REQUIRED	U/M	PCC	PART OR IDENT NO. DOCUMENT NO.	DASH	EIR AND PART DESCRIPTION INFORMATION	ECC	ST	CHG
104	2	EA	I	9004633	-01	INTEGRATED CIRCUIT DIGITAL TTLS 74S112 * FF DUAL JK		A	*
105	2	EA		W4900127	-00	INTEGRATED CIRCUIT DIGITAL TTL 74161 CNTR 4BT BIN		A	*
106	1	EA		W2200105	-03	SPACER .25/.38 DIA X .405 4-40 THD		A	*
107	1	EA		W2200105	-00	SPACER .38 DIA X .120		A	*
108	263	EA		6630081	-01	CONTACT, ELECTRICAL, WIRE WRAP PC BD W WRAP BRZ GOLD		A	*
109	2	EA		W5700295	-00	CONN, PRINTED CIRCUIT, ELEC SLDR MTD 40 FIXED PINS		A	*
				REF DES	(1)	J7A,J7B,			
110	1	EA		W5700296	-00	CONNECTOR RECTANGULAR ELEC 9 FIXED SOCKETS RECP		A	*
				REF DES	(1)	J8,			
111	1	EA		W0400709	-00	BOARD STIFFENER,FRONT		A	*
112	1	EA		W0400796	-00	STIFFENER REAR		A	*
113	76	EA		W2600038	-00	CLIP, RETAINING .006 THK, BERYLLIUM COPPER		A	*
114	1	EA		W7800108	-00	SWITCH, TOGGLE, LEVER 2 POSITION		A	*
				REF DES	(1)	S1,			
115	1	EA		W5800189	-00	CONNECTOR, COAXIAL, ELECTRICAL 1000 VOLTS, 50 OHMS		A	*
				REF DES	(1)	TP1			
116	2	EA		W5700296	-02	CONNECTOR RECTANGULAR ELEC BRACKET		A	*
119	AR	IN		W5400001	124	INSULATION SLEEVING, ELEC SIZE 24 BLACK .022 ID		A	*
120	2	EA		W2100062	-01	SCREW MACHINE PAN HEAD SST PASS XREC 2-56 .188		A	*
121	2	EA		W2202560	-01	WASHER, FLAT SST PASS.025THK .089ID .2190D		A	*
122	2	EA		W2202561	-02	WASHER, LOCK, FLAT NO. 2		A	*
126	1	EA		W6502500	103	RES,FXD,COMPOSITION,1/4W,5% 10K		A	*
				REF DES	(1)	R91,			
127	1	EA		W6501010	331	RESISTOR, FIXED, COMPOSITION 330 OHMS 5% 1W		A	*
				REF DES	(1)	R94,			

SPERRY UNIVAC PARTS LIST

SPERRY UNIVAC IS A DIVISION OF SPERRY CORPORATION

MFG CODE	ISSUE DATE	CONTROL		DOC NO.	AC	SHEET	
W	81/12/28	W 777	PL	6603053	1	7	*

TITLE	PCC	ADC	PCD	COMM CODE	CA	U/M	ST	TYPE	SIZE	CLASS	
PC ASSEMBLY - OPTION BD						EA	A	AP	D	A	*

FIND NO.	QUANTITY REQUIRED	U/M	PCC	PART OR IDENT NO. DOCUMENT NO.	DASH	EIR AND PART DESCRIPTION INFORMATION		ECC	ST	CHG
132	2	EA		W5800195	-05	SOCKET INTEGRATED CIRCUIT	24TERM 2 INLINE PC BOARD TIN		A	*
134	1	EA		W4900169	-01	INTEGRATED CIRCUIT,DIGITAL	TTLS 74S74 * FF D SELECTED		I	*
135	1	EA		W8600053	-02	LABEL, IDENTIFICATION	TTY CRT 700 RED LTR WHT BKGD		A	*
136	AR	IN		W5300333	-90	WIRE ELECTRICAL	30SLD 300V PVD WHT		A	*
137	1	EA		W7800114	-00	SWITCH ASSY	TOGGLE ROCKER 4SPDT 30V		A	*
F001		X		W9100401	-02	LOGIC DIAG, OPTION BD DM357	*		A	*
S001		X		SW01163	-00	MARKING,MECHANICAL SPECS	DSGN-F/GENERAL IDENTIFICATION		A	*
S002		X		SW00536	-00	THREADED FASTENERS SPECS	DSGN-SELECTION-INSTALLATION		A	*

UNIVAC PARTS LIST

SPERRY UNIVAC IS A DIVISION OF SPERRY CORPORATION

MFG CODE	ISSUE DATE	CONTROL		DOC NO.	AC	SHEET
J ,W	81/01/06	W 777	PL	W4400619	8	1

TITLE	PCC	ADC	PCD	COMM CODE	CA	U/M	ST	TYPE	SIZE	CLASS
PC ASSEMBLY - OPTION BD DM357						EA	A	M	C	A

FIND NO.	QUANTITY REQUIRED	U/M	PCC	PART OR IDENT NO. DOCUMENT NO.	DASH	EIR AND PART DESCRIPTION INFORMATION	ECC	ST	CHG
Z099				W 94240	-02	PL REV DK, PIC REV DK, RANGE 00 - 08 EIR RELEASED 81/01/05			*
Z098				W 94240	-01	PL REV DJ, PIC REV DH, RANGE 00 - 08 EIR RELEASED 80/11/24			
*****	******* ***	**	*	**********	****	********** COMMON DATA **********			
1	1	EA		W4000528	-00	PC BOARD - OPTION DM357		A	
10	2	EA		W4900160	-00	INTEGRATED CIRCUIT, DIGITAL TTL 74157 MUX QUAD 2-IN		A	
18	2	EA		8000041	-00	INTEGRATED CIRCUIT -IC181 TTL 74198 * REG SHF 8BT		I	
33	1	EA		W4900554	-01	INTEGRATED CIRCUIT, DIGITAL TTLH 74H10 GT NAND 3IN		A	
40	1	EA	I	5036517	-00	INTEGRATED CIRCUIT TTLH 74H40 * GT NAND BUFF		I	
41	1	EA	I	3008190	-00	INTEGRATED CIRCUIT TTL 7442 * DCDR 4-10LN		I	
45	2	EA	I	3013357	-00	INTEGRATED CIRCUIT-IC194 TTLH 74H54 * GT AOI		I	
70	2	EA		W6502500	752	RES,FXD,COMPOSITION,1/4W,5% 7500 OHMS		A	
				REF DES	(1)	R25,R26,			
97	1	EA		W4900078	-00	INTEGRATED CIRCUIT, DIGITAL TTLH 74H55 EXP 4-IN AOI		A	
98	1	EA		W4900195	-00	INTEGRATED CIRCUIT 24 DIL - PLASTIC OR CERAMIC		A	
99	1	EA		W4900195	-01	INTEGRATED CIRCUIT 24 DIL - PLASTIC OR CERAMIC		A	
105	2	EA		W4900127	-00	INTEGRATED CIRCUIT, DIGITAL TTL 74161 CNTR 4BT BIN		A	
106	1	EA		W2200105	-03	SPACER .25/.38 DIA X .406 4-40 THD		A	
107	1	EA		W2200105	-00	SPACER .38 DIA X .120		A	
111	1	EA		W0400709	-00	BOARD STIFFENER,FRONT		A	
112	1	EA		W0400796	-00	STIFFENER REAR		A	
132	2	EA		W5800195	-05	IC SOCKET 24 PIN SOCKET		A	
137	1	EA		W7800114	-00	SWITCH, TOGGLE, ROCKER DPDT ON NONE OFF50MA 30VDC		A	
F001		X		W9100401	-01	LOGIC DIAG, OPTION BD DM357		A	*
S001		X		SW01163	-00	MARKING,MECHANICAL SPECS DSGN-F/GENERAL IDENTIFICATION		A	

UNIVAC PARTS LIST

SPERRY UNIVAC IS A DIVISION OF SPERRY CORPORATION

MFG CODE	ISSUE DATE	CONTROL		DOC NO.		SHEET
J ,W	81/01/06	W 777	PL	W4400619	8	2

TITLE	PCC	ADC	PCD	COMM CODE	CA	U/M	ST	TYPE	SIZE	CLASS
PC ASSEMBLY - OPTION BD DM357						EA	A	M	C	A

FIND NO.	QUANTITY REQUIRED		U/M	PCC	PART OR IDENT NO. DOCUMENT NO.	DASH	EIR AND PART DESCRIPTION INFORMATION	ECC	ST	CHG
S002			X		SW00536	-00	THREADED FASTENERS SPECS DSGN-SELECTION-INSTALLATION		A	
*****	*******	***		*	**********	****	SEE TABULATION ON DRAWING VAR DATA PART - 00 *********		A	
2	2		EA	I	5036516	-00	INTEGRATED CIRCUIT DIGITAL TTLS 74S10 * GT NAND 3IN		A	
3	3		EA	I	5036506	-00	INTEGRATED CIRCUIT TTLS 74S11 * GT AND 3IN		A	
4	1		EA	I	2892079	-00	INTEGRATED CIRCUIT DIGITAL TTLS 74S20 * GT NAND 4IN		A	
6	1		EA	I	2892081	-00	INTEGRATED CIRCUIT DIGITAL TTLS 74S64 * GT AOI		A	
8	5		EA	I	9004323	-01	INTEGRATED CIRCUIT DIGITAL TTL FF 2 JK ET BT	0	I	
14	2		EA		W4800005	-00	OPOELECTRONIC COUPLER PLASTIC		A	
15	1		EA		W4900348	-00	INTEGRATED CIRCUIT, DIGITAL CMOS 6402 UART		A	
16	1		EA		W4900182	-00	INTEGRATED CIRCUIT, DIGITAL TTLS 74S113 FF DUAL JK ET		A	
17	1		EA	I	3008182	-00	INTEGRATED CIRCUIT TTL 7402 * GT NOR 2IN		I	
23	1		EA	I	9001407	-01	INTEGRATED CIRCUIT DIGITAL TTL DEC BIN 1 OF 8 BT	0	I	
25	10		EA	I	5036515	-00	INTEGRATED CIRCUIT TTLH 74H00 * GT NAND 2IN		I	
26	5		EA	I	2899571	-00	INTEGRATED CIRCUIT DIGITAL TTLS 74S00 * GT NAND 2IN		A	
27	6		EA	I	3013354	-00	INTEGRATED CIRCUIT TTLH 74H01 * GT NAND 2IN		I	
28	1		EA	I	2899412	-00	INTEGRATED CIRCUIT LINEAR TTL 7403 * GT NAND 2IN		A	
30	2		EA		6558675	-00	INTEGRATED CIRCUIT		A	
34	8		EA	I	2899573	-00	INTEGRATED CIRCUIT DIGITAL TTLH 74H11 * GT AND 3IN		I	
35	1		EA	I	3008089	-00	INTEGRATED CIRCUIT TTL 7413 * GT NAND 4IN		I	
36	1		EA	I	3008187	-00	INTEGRATED CIRCUIT TTL 7420 * GT NAND 4IN		I	
37	4		EA	I	3013355	-00	INTEGRATED CIRCUIT-IC192 TTLH 74H21 * GT AND 4IN		I	
38	1		EA		3013468	-00	INTEGRATED CIRCUIT - IC204 TTLH 74H30 * GT NAND 8IN		I	
39	14		EA		W4900128	-01	INTEGRATED CIRCUIT, DIGITAL TTL 7438 QUAD 2IN NAND		I	
42	3		EA		W4900093	-01	INTEGRATED CIRCUIT, DIGITAL TTLH 74H50		A	
46	10		EA	I	3008194	-00	INTEGRATED CIRCUIT TTL 7474 * FF D DUAL		I	

UNIVAC PARTS LIST

SPERRY UNIVAC IS A DIVISION OF SPERRY CORPORATION

MFG CODE	ISSUE DATE	CONTROL		DOC NO.	AC	SHEET
J ,W	81/01/06	W 777	PL	W4400619	8	3

TITLE	PCC	ADC	PCD	COMM CODE	CA	U/M	ST	TYPE	SIZE	CLASS
PC ASSEMBLY - OPTION BD DM357						EA	A	M	C	A

FIND NO.	QUANTITY REQUIRED	U/M	PCC	PART OR IDENT NO. DOCUMENT NO.	DASH	EIR AND PART DESCRIPTION INFORMATION	ECC	ST	CHG
47	6	EA	I	5036157	-00	INTEGRATED CIRCUIT DIGITAL DUAL D TYPE EDGE TRIG. F-F		A	
48	2	EA	I	3008195	-00	INTEGRATED CIRCUIT TTL 7475 * REG LATCH 4BT		I	
49	4	EA	I	3006204	-00	INTEGRATED CIRCUIT - IC7 TTL 7493 * CNTR 4BT		I	
50	3	EA	I	9004321	-01	INTEGRATED CIRCUIT DIGITAL TTL FF 2 JK ET BT	0	I	
51	2	EA	I	3007952	-00	INTEGRATED CIRCUIT TTL 74123 * MVB DUAL RGT		I	
54	3	EA	I	3007845	-00	INTEGRATED CIRCUIT TTL 74193 * CNTR 4BT U/D		I	
55	6	EA		2510193	-00	INTEGRATED CIRCUIT,DIGITAL		I	
56	2	EA	I	3008031	-00	INTEGRATED CIRCUIT TTL 74122 * MVB RGT W/C		I	
57	3	EA		W4900010	-00	INTEGRATED CIRCUIT, DIGITAL DTL 844 * GT 2IN NAND		A	
58	11	EA	I	5036505	-00	INTEGRATED CIRCUIT TTLH 74H08 * GT AND 2IN		I	
59	2	EA	I	5036522	-00	INTEGRATED CIRCUIT DIGITAL TTL 3003 * GT OR 2IN		I	
63	18	EA		W6502500	362	RES,FXD,COMPOSITION,1/4W,5% 3600 OHMS		A	
				REF DES	(1)	R1-R18,			
64	4	EA		W6502500	121	RES,FXD,COMPOSITION,1/4W,5% 120 OHMS		A	
				REF DES	(1)	R19-R21,R86,			
67	4	EA		W7100004	101	CAPACITOR, FIXED, CERAMIC DIEL 1.0 UF +80%, -20%		A	
				REF DES	(1)	C1,C2,C8,C9,			
68	2	EA		W6502500	123	RES,FXD,COMPOSITION,1/4W,5% 12K		A	
				REF DES	(1)	R31,R56,			
69	14	EA		W6502500	471	RES,FXD,COMPOSITION,1/4W,5% 470 OHMS		A	
				REF DES	(1)	R22,R23,R34,R27-R30, (2) R39,R62,R75-R78,R80,			
72	1	EA		W6502500	182	RES,FXD,COMPOSITION,1/4W,5% 1800 OHMS		A	
				REF DES	(1)	R37,			
73	22	EA		W6502500	102	RES,FXD,COMPOSITION,1/4W,5% 1000 OHMS		A	
				REF DES	(1)	R24,R33,R35,R36,R38, (2) R41,R43,R45,R47,R48,			

UNIVAC PARTS LIST
SPERRY UNIVAC IS A DIVISION OF SPERRY CORPORATION

MFG CODE: J ,W | ISSUE DATE: 81/01/06 | CONTROL: W 777 | PL | DOC NO.: W4400619 | C: 8 | SHEET: 4

TITLE: PC ASSEMBLY - OPTION BD DM357

PCC	ADC	PCD	COMM CODE	CA	U/M	ST	TYPE	SIZE	CLASS
					EA	A	M	C	A

FIND NO.	QUANTITY REQUIRED	U/M	PCC	PART OR IDENT NO. DOCUMENT NO.	DASH	EIR AND PART DESCRIPTION INFORMATION	ECC	ST	CHG
				REF DES	(3)	R60,R61,R87-R90,R83, (4) R95,R96,R99-R101,			
74	1	EA		W6502500	303	RES,FXD,COMPOSITION,1/4W,5% 30K		A	
				REF DES	(1)	R42,			
75	1	EA		W6502500	223	RES,FXD,COMPOSITION,1/4W,5% 22K		A	
				REF DES	(1)	R44,			
76	1	EA		W6502500	203	RES,FXD,COMPOSITION,1/4W,5% 20K		A	
				REF DES	(1)	R46,			
77	2	EA		W6502500	151	RES,FXD,COMPOSITION,1/4W,5% 150 OHMS		A	
				REF DES	(1)	R32,R49,			
78	1	EA		W6502500	513	RES,FXD,COMPOSITION,1/4W,5% 51K		A	
				REF DES	(1)	R50,			
79	1	EA		W6502500	512	RES,FXD,COMPOSITION,1/4W,5% 5100 OHMS		A	
				REF DES	(1)	R92,			
80	2	EA		W6502010	202	RESISTOR, FIXED, COMPOSITION 2 K 5% 2W		A	
				REF DES	(1)	R51,R55,			
81	1	EA		W6501010	471	RESISTOR, FIXED, COMPOSITION 470 OHMS 5% 1W		A	
				REF DES	(1)	R53,			
82	1	EA		W6501010	101	RESISTOR, FIXED, COMPOSITION 100 OHMS 5% 1W		A	
				REF DES	(1)	R52,			
85	1	EA	C	4916657	-06	CAP FXD CER DIEL 50V +80 - 20% 100K PF		A	
				REF DES	(1)	C4,			
86	1	EA		W7100352	154	CAPACITOR, FIXED, TANT DIEL 35V 10% 150 PF		A	
				REF DES	(1)	C3,			
87	1	EA		W6901500	221	CAPACITOR, FIXED, MICA DIEL 500V 5% 220 PF		A	
				REF DES	(1)	C5,			

UNIVAC PARTS LIST

SPERRY UNIVAC IS A DIVISION OF SPERRY CORPORATION

MFG CODE	ISSUE DATE	CONTROL		DOC NO.	AC	SHEET
J ,W	81/01/06	W 777	PL	W4400619	8	5

TITLE	PCC	ADC	PCD	COMM CODE	CA	U/M	ST	TYPE	SIZE	CLASS
PC ASSEMBLY - OPTION 8D DM357						EA	A	M	C	A

FIND NO.	QUANTITY REQUIRED	U/M	PCC	PART OR IDENT NO. DOCUMENT NO.	DASH	EIR AND PART DESCRIPTION INFORMATION	ECC	ST	CHG
88	1	EA		W6901500	151	CAPACITOR, FIXED, MICA DIEL 500V 5% 150 PF		A	
				REF DES	(1)	C6,			
89	1	EA		W6901500	330	CAPACITOR, FIXED, MICA DIEL 500V 5% 33 PF		A	
				REF DES	(1)	C7,			
90	65	EA		6630012	-05	CAPACITOR, FIXED, CERAMIC DIEL .010 UF,50VDC,+80%,-20%		A	
				REF DES	(1)	C12,C15,C16,C19,C21, (2) C23,C25-C27,C29,C31,			
				REF DES	(3)	C32,C34-C36,C40,C43- (4) C45,C47,C49,C51,C53,			
				REF DES	(5)	C55,C57,C59,C63,C64, (6) C66,C67,C70,C71,C75-			
				REF DES	(7)	C80,C83-C85,C87,C91- (8) C93,C95,C98,C101-			
				REF DES	(9)	C104,C106,C109-C111, (10) C113,C114,C116,C117,			
				REF DES	(11)	C119,C122,C124-C126, (12) C128,			
92	2	EA		W7701017	-00	SEMICONDUCTOR DEVICE, DIODE 200MA		A	
				REF DES	(1)	CR1,CR2,			
93	2	EA	D	2899056	-00	SEMICONDUCTOR DEVICE DIODE SILICON POWER 1N4003		A	
				REF DES	(1)	CR3,CR4,			
94	1	EA		W7600019	-00	TRANSISTOR PNP VCBO 150V 5.6MW BETA20		A	
				REF DES	(1)	Q1,			
96	1	EA		W4800007	-00	RESISTOR NETWORK, FIXED 28ELEMT1.5 W 2% 200AND 300		A	
100	3	EA	I	5036504	-00	INTEGRATED CIRCUIT DIGITAL TTLS 74S04 * GT HEX INVERT		A	
101	19	EA	I	3007755	-00	INTEGRATED CIRCUIT TTLH 74H04 * GT HEX INVERT		I	
102	1	EA	I	3008186	-00	INTEGRATED CIRCUIT TTL 7410 * GT NAND 3IN		I	
103	3	EA	I	5036146	-00	INTEGRATED CIRCUIT DIGITAL TTLS 74S74 * FF DUAL D		A	
104	1	EA	I	9004633	-01	INTEGRATED CIRCUIT DIGITAL TTLS 74S112 * FF DUAL JK		A	
108	229	EA		W5800062	-09	CONTACT ELECTRICAL, WIRE WARP PLATING, GOLD		A	
110	1	EA		W5700296	-00	CONNECTOR, RECTANGULAR, ELEC 9 FIXED SOCKETS RECP		A	

SPERRY UNIVAC PARTS LIST

SPERRY UNIVAC IS A DIVISION OF SPERRY CORPORATION

MFG CODE	ISSUE DATE	CONTROL		DOC NO.	AC	SHEET
J ,W	81/01/06	W 777	PL	W4400619	8	7

TITLE	PCC	ADC	PCD	COMM CODE	CA	U/M	ST	TYPE	SIZE	CLASS
PC ASSEMBLY - OPTION BD DM357						EA	A	M	C	A

FIND NO.	QUANTITY REQUIRED	U/M	PCC	PART OR IDENT NO. DOCUMENT NO.	DASH	EIR AND PART DESCRIPTION INFORMATION	ECC	ST	CHG
15	1	EA		W4900348	-00	INTEGRATED CIRCUIT, DIGITAL CMOS 6402 UART		A	
16	1	EA		W4900182	-00	INTEGRATED CIRCUIT, DIGITAL TTLS 74S113 FF DUAL JK ET		A	
17	1	EA	I	3008182	-00	INTEGRATED CIRCUIT TTL 7402 * GT NOR 2IN		I	
19	4	EA	I	2899587	-00	INTEGRATED CIRCUIT DIGITAL TTL 74175 * FF D QUAD		A	
22	2	EA		W4900175	-00	INTEGRATED CIRCUIT, DIGITAL TTL 82S62 9BT PARTY GEN		A	
23	1	EA	I	9001407	-01	INTEGRATED CIRCUIT DIGITAL TTL DEC BIN 1 OF 8 BT	0	I	
25	10	EA	I	5036515	-00	INTEGRATED CIRCUIT TTLH 74H00 * GT NAND 2IN		I	
26	7	EA	I	2899571	-00	INTEGRATED CIRCUIT DIGITAL TTLS 74S00 * GT NAND 2IN		A	
27	6	EA	I	3013354	-00	INTEGRATED CIRCUIT TTLH 74H01 * GT NAND 2IN		I	
28	7	EA	I	2899412	-00	INTEGRATED CIRCUIT LINEAR TTL 7403 * GT NAND 2IN		A	
30	4	EA		6558675	-00	INTEGRATED CIRCUIT		A	
34	9	EA	I	2899573	-00	INTEGRATED CIRCUIT DIGITAL TTLH 74H11 * GT AND 3IN		I	
35	1	EA	I	3008089	-00	INTEGRATED CIRCUIT TTL 7413 * GT NAND 4IN		I	
36	1	EA	I	3008187	-00	INTEGRATED CIRCUIT TTL 7420 * GT NAND 4IN		I	
37	7	EA	I	3013355	-00	INTEGRATED CIRCUIT-IC192 TTLH 74H21 * GT AND 4IN		I	
38	1	EA		3013468	-00	INTEGRATED CIRCUIT - IC204 TTLH 74H30 * GT NAND 8IN		I	
39	16	EA		W4900128	-01	INTEGRATED CIRCUIT, DIGITAL TTL 7438 QUAD 2IN NAND		I	
42	3	EA		W4900093	-01	INTEGRATED CIRCUIT, DIGITAL TTLH 74H50		A	
43	1	EA	I	5036519	-00	INTEGRATED CIRCUIT DIGITAL 2, 2WIDE 2INPUT AND/OR INVERT		I	
46	10	EA	I	3008194	-00	INTEGRATED CIRCUIT TTL 7474 * FF D DUAL		I	
47	11	EA	I	5036157	-00	INTEGRATED CIRCUIT DIGITAL DUAL D TYPE EDGE TRIG. F-F		A	
48	2	EA	I	3008195	-00	INTEGRATED CIRCUIT TTL 7475 * REG LATCH 4BT		I	
49	4	EA	I	3006204	-00	INTEGRATED CIRCUIT - IC7 TTL 7493 * CNTR 4BT		I	
50	3	EA	I	9004321	-01	INTEGRATED CIRCUIT DIGITAL TTL FF 2 JK ET BT	0	I	
51	2	EA	I	3007952	-00	INTEGRATED CIRCUIT TTL 74123 * MVB DUAL RGT		I	

UNIVAC PARTS LIST
SPERRY UNIVAC IS A DIVISION OF SPERRY CORPORATION

MFG CODE	ISSUE DATE	CONTROL		DOC NO.	AC	SHEET
J ,W	81/01/06	W 777	PL	W4400619	B	6

TITLE	PCC	ADC	PCD	COMM CODE	CA	U/M	ST	TYPE	SIZE	CLASS
PC ASSEMBLY - OPTION 8D DM357						EA	A	M	C	A

FIND NO.	QUANTITY REQUIRED	U/M	PCC	PART OR IDENT NO. DOCUMENT NO.	DASH	EIR AND PART DESCRIPTION INFORMATION		ECC	ST	CHG
				REF DES	(1)	J8,				
113	19	EA		W2600038	-00	CLIP, RETAINING	.006 THK, BERYLLIUM COPPER		A	
114	1	EA		W7800108	-00	SWITCH, TOGGLE, LEVER	2 POSITION		A	
				REF DES	(1)	S1,				
115	1	EA		W5800189	-00	CONNECTOR, COAXIAL, ELECTRICAL	1000 VOLTS, 50 OHMS		A	
				REF DES	(1)	TP1,				
116	2	EA		W5700296	-02	CONNECTOR, RECTANGULAR, ELEC	BRACKET		A	
119	AR	IN		W5400001	124	INSULATION SLEEVING, ELEC	SIZE 24 BLACK .022 ID		A	
120	2	EA		W2100062	-01	SCREW, MACH, PAN HEAD	STL PASS XREC 2-56 .180		A	
121	2	EA		W2202560	-01	WASHER, FLAT	SST PASS,.025THK .089ID .219OD		A	
122	2	EA		W2202561	-02	WASHER, LOCK, FLAT	NO. 2		A	
126	1	EA		W6502500	103	RES,FXD,COMPOSITION,1/4W,5%	10K		A	
				REF DES	(1)	R91,				
127	1	EA		W6501010	331	RESISTOR, FIXED, COMPOSITION	330 OHMS 5% 1W		A	
				REF DES	(1)	R94,				
134	1	EA		W4900169	-01	INTEGRATED CIRCUIT,DIGITAL	TTLS 74S74 * FF D SELECTED		I	
135	1	EA		W8600053	-02	LABEL, IDENTIFICATION	TTY CRT 700 RED LTR WHT BKGD		A	
136	AR	IN		W5300333	-90	WIRE, ELEC	30SLD 300V PVD WHT		A	
*****	*******	***	*	**********	****	SEE TABULATION ON DRAWING	VAR DATA PART - 01 *********		A	
2	2	EA	I	5036516	-00	INTEGRATED CIRCUIT DIGITAL	TTLS 74S10 * GT NAND 3IN		A	
3	6	EA	I	5036506	-00	INTEGRATED CIRCUIT	TTLS 74S11 * GT AND 3IN		A	
4	1	EA	I	2892079	-00	INTEGRATED CIRCUIT DIGITAL	TTLS 74S20 * GT NAND 4IN		A	
6	1	EA	I	2892081	-00	INTEGRATED CIRCUIT DIGITAL	TTLS 74S64 * GT AOI		A	
8	11	EA	I	9004323	-01	INTEGRATED CIRCUIT DIGITAL	TTL FF 2 JK ET BT	0	1	
14	2	EA		W4800005	-00	OPOELECTRONIC COUPLER	PLASTIC		A	

UNIVAC PARTS LIST

SPERRY UNIVAC IS A DIVISION OF SPERRY CORPORATION

MFG CODE	ISSUE DATE	CONTROL		DOC NO.	AC	SHEET
J ,W	81/01/06	W 777	PL	W4400619	8	8

TITLE: PC ASSEMBLY - OPTION BD DM357

PCC	ADC	PCD	COMM CODE	CA	U/M	ST	TYPE	SIZE	CLASS
					EA	A	M	C	A

FIND NO.	QUANTITY REQUIRED	U/M	PCC	PART OR IDENT NO. DOCUMENT NO.	DASH	EIR AND PART DESCRIPTION INFORMATION	ECC	ST	CHG
52	1	EA	I	4915632	-00	INTEGRATED CIRCUIT TTL 74150 MLPX 1 OF 16		I	
53	8	EA		2899585	-00	INTEGRATED CIRCUIT DIGITAL TTL 74170 * REG FILE 4X4		A	
54	3	EA	I	3007845	-00	INTEGRATED CIRCUIT TTL 74193 * CNTR 4BT U/D		I	
55	6	EA		2510193	-00	INTEGRATED CIRCUIT,DIGITAL		I	
56	2	EA	I	3008031	-00	INTEGRATED CIRCUIT TTL 74122 * MVB RGT W/C		I	
57	3	EA		W4900010	-00	INTEGRATED CIRCUIT, DIGITAL DTL 844 * GT 2IN NAND		A	
58	14	EA	I	5036505	-00	INTEGRATED CIRCUIT TTLH 74H08 * GT AND 2IN		I	
59	3	EA	I	5036522	-00	INTEGRATED CIRCUIT DIGITAL TTL 3003 * GT OR 2IN		I	
61	1	EA		W8001000	-04	DELAY LINE 30.00NSEC TD 3TERM 390 OHM		A	
				REF DES	(1)	DL1,			
63	18	EA		W6502500	362	RES,FXD,COMPOSITION,1/4W,5% 3600 OHMS		A	
				REF DES	(1)	R1-R18,			
64	4	EA		W6502500	121	RES,FXD,COMPOSITION,1/4W,5% 120 OHMS		A	
				REF DES	(1)	R19-R21,R86,			
67	4	EA		W7100004	101	CAPACITOR, FIXED, CERAMIC DIEL 1.0 UF +80%, -20%		A	
				REF DES	(1)	C1,C2,C8,C9,			
68	2	EA		W6502500	123	RES,FXD,COMPOSITION,1/4W,5% 12K		A	
				REF DES	(1)	R31,R56,			
69	28	EA		W6502500	471	RES,FXD,COMPOSITION,1/4W,5% 470 OHMS		A	
				REF DES	(1)	R22,R23,R34,R27-R30, (2) R39,R62-R78,R57,R58,			
				REF DES	(3)	R80,			
72	1	EA		W6502500	182	RES,FXD,COMPOSITION,1/4W,5% 1800 OHMS		A	
				REF DES	(1)	R37,			
73	23	EA		W6502500	102	RES,FXD,COMPOSITION,1/4W,5% 1000 OHMS		A	
				REF DES	(1)	R24,R33,R35,R36,R38, (2) R41,R43,R45,R47,R48,			

UNIVAC PARTS LIST
SPERRY UNIVAC IS A DIVISION OF SPERRY CORPORATION

MFG CODE	ISSUE DATE	CONTROL		DOC NO.	AC	SHEET
J ,W	81/01/06	W 777	PL	W4400619	8	9

TITLE: PC ASSEMBLY - OPTION 8D DM357

PCC	ADC	PCD	COMM CODE	CA	U/M	ST	TYPE	SIZE	CLASS
					EA	A	M	C	A

FIND NO.	QUANTITY REQUIRED	U/M	PCC	PART OR IDENT NO. DOCUMENT NO.	DASH	EIR AND PART DESCRIPTION INFORMATION	ECC	ST	CHG
				REF DES	(3)	R60,R61,R87-R90,R83, (4) R95,R96,R98-R101,			
74	1	EA		W6502500	303	RES,FXD,COMPOSITION,1/4W,5% 30K		A	
				REF DES	(1)	R42,			
75	1	EA		W6502500	223	RES,FXD,COMPOSITION,1/4W,5% 22K		A	
				REF DES	(1)	R44,			
76	1	EA		W6502500	203	RES,FXD,COMPOSITION,1/4W,5% 20K		A	
				REF DES	(1)	R46,			
77	2	EA		W6502500	151	RES,FXD,COMPOSITION,1/4W,5% 150 OHMS		A	
				REF DES	(1)	R32,R49,			
78	1	EA		W6502500	513	RES,FXD,COMPOSITION,1/4W,5% 51K		A	
				REF DES	(1)	R50,			
79	1	EA		W6502500	512	RES,FXD,COMPOSITION,1/4W,5% 5100 OHMS		A	
				REF DES	(1)	R92,			
80	2	EA		W6502010	202	RESISTOR, FIXED, COMPOSITION 2 K 5% 2W		A	
				REF DES	(1)	R51,R55,			
81	1	EA		W6501010	471	RESISTOR, FIXED, COMPOSITION 470 OHMS 5% 1W		A	
				REF DES	(1)	R53,			
82	1	EA		W6501010	101	RESISTOR, FIXED, COMPOSITION 100 OHMS 5% 1W		A	
				REF DES	(1)	R52,			
84	1	EA		W6502500	391	RES,FXD,COMPOSITION,1/4W,5% 390 OHMS		A	
				REF DES	(1)	R59,			
85	1	EA	C	4916657	-06	CAP FXD CER DIEL 50V +80 - 20% 100K PF		A	
				REF DES	(1)	C4,			
86	1	EA		W7100352	154	CAPACITOR, FIXED, TANT DIEL 35V 10% 150 PF		A	
				REF DES	(1)	C3,			

UNIVAC PARTS LIST

SPERRY UNIVAC IS A DIVISION OF SPERRY CORPORATION

MFG CODE	ISSUE DATE	CONTROL		DOC NO.	AC	SHEET
J ,W	81/01/06	W 777	PL	W4400619	8	10

TITLE	PCC	ADC	PCD	COMM CODE	CA	U/M	ST	TYPE	SIZE	CLASS
PC ASSEMBLY - OPTION 8D DM357						EA	A	M	C	A

FIND NO.	QUANTITY REQUIRED	U/M	PCC	PART OR IDENT NO. DOCUMENT NO.	DASH	EIR AND PART DESCRIPTION INFORMATION	ECC	ST	CHG
87	1	EA		W6901500	221	CAPACITOR, FIXED, MICA DIEL 500V 5% 220 PF		A	
				REF DES	(1)	C5,			
88	1	EA		W6901500	151	CAPACITOR, FIXED, MICA DIEL 500V 5% 150 PF		A	
				REF DES	(1)	C6,			
89	1	EA		W6901500	330	CAPACITOR, FIXED, MICA DIEL 500V 5% 33 PF		A	
				REF DES	(1)	C7,			
90	65	EA		6630012	-05	CAPACITOR, FIXED, CERAMIC DIEL .010 UF,50VDC,+80%,-20%		A	
				REF DES	(1)	C12,C15,C16,C19,C21, (2) C23,C25-C27,C29,C31,			
				REF DES	(3)	C32,C34-C36,C40,C43- (4) C45,C47,C49,C51,C53,			
				REF DES	(5)	C55,C57,C59,C63,C64, (6) C66,C67,C70,C71,C75,			
				REF DES	(7)	C76-C80,C83-C85,C87, (8) C91-C93,C95,C98,C101-			
				REF DES	(9)	C104,C106,C109-C111, (10) C113,C114,C116,C117,			
				REF DES	(11)	C119,C122,C124-C126, (12) C128,			
92	2	EA		W7701017	-00	SEMICONDUCTOR DEVICE, DIODE 200MA		A	
				REF DES	(1)	CR1,CR2,			
93	2	EA	D	2899056	-00	SEMICONDUCTOR DEVICE DIODE SILICON POWER 1N4003		A	
				REF DES	(1)	CR3,CR4,			
94	1	EA		W7600019	-00	TRANSISTOR PNP VCBO 150V 5.6MW BETA20		A	
				REF DES	(1)	Q1,			
96	1	EA		W4800007	-00	RESISTOR NETWORK, FIXED 28ELEMT1.5 W 2% 200AND 300		A	
100	4	EA	I	5036504	-00	INTEGRATED CIRCUIT DIGITAL TTLS 74S04 * GT HEX INVERT		A	
101	20	EA	I	3007755	-00	INTEGRATED CIRCUIT TTLH 74H04 * GT HEX INVERT		I	
102	2	EA	I	3008186	-00	INTEGRATED CIRCUIT TTL 7410 * GT NAND 3IN		I	
103	3	EA	I	5036146	-00	INTEGRATED CIRCUIT DIGITAL TTLS 74S74 * FF DUAL D		A	
104	1	EA	I	9004633	-01	INTEGRATED CIRCUIT DIGITAL TTLS 74S112 * FF DUAL JK		A	

SPERRY UNIVAC PARTS LIST

SPERRY UNIVAC IS A DIVISION OF SPERRY CORPORATION

MFG CODE	ISSUE DATE	CONTROL	DOC NO.	AC	SHEET
J ,W	81/01/06	W 777	PL W4400619	B	11

TITLE: PC ASSEMBLY - OPTION BD DM357

PCC	ADC	PCD	COMM CODE	CA	U/M	ST	TYPE	SIZE	CLASS
					EA	A	M	C	A

FIND NO.	QUANTITY REQUIRED	U/M	PCC	PART OR IDENT NO. DOCUMENT NO.	DASH	EIR AND PART DESCRIPTION INFORMATION		ECC	ST	CHG
108	250	EA		W5800062	-09	CONTACT ELECTRICAL, WIRE WARP	PLATING, GOLD		A	
110	1	EA		W5700296	-00	CONNECTOR, RECTANGULAR, ELEC	9 FIXED SOCKETS RECP		A	
				REF DES	(1)	J8,				
113	71	EA		W2600038	-00	CLIP, RETAINING	.006 THK, BERYLLIUM COPPER		A	
114	1	EA		W7800108	-00	SWITCH, TOGGLE, LEVER	2 POSITION		A	
				REF DES	(1)	S1,				
115	1	EA		W5800189	-00	CONNECTOR, COAXIAL, ELECTRICAL	1000 VOLTS, 50 OHMS		A	
				REF DES	(1)	TP1,				
116	2	EA		W5700296	-02	CONNECTOR, RECTANGULAR, ELEC	BRACKET		A	
119	AR	IN		W5400001	124	INSULATION SLEEVING, ELEC	SIZE 24 BLACK .022 ID		A	
120	2	EA		W2100062	-01	SCREW, MACH, PAN HEAD	STL PASS XREC 2-56 .180		A	
121	2	EA		W2202560	-01	WASHER, FLAT	SST PASS,.025THK .089ID .219OD		A	
122	2	EA		W2202561	-02	WASHER, LOCK, FLAT	NO. 2		A	
126	1	EA		W6502500	103	RES,FXD,COMPOSITION,1/4W,5%	10K		A	
				REF DES	(1)	R91,				
127	1	EA		W6501010	331	RESISTOR, FIXED, COMPOSITION	330 OHMS 5% 1W		A	
				REF DES	(1)	R94,				
134	1	EA		W4900169	-01	INTEGRATED CIRCUIT,DIGITAL	TTLS 74S74 * FF D SELECTED		I	
135	1	EA		W8600053	-02	LABEL, IDENTIFICATION	TTY CRT 700 RED LTR WHT BKGD		A	
136	AR	IN		W5300333	-90	WIRE, ELEC	30SLD 300V PVD WHT		A	
*****	*******	***	*	**********	****	SEE TABULATION ON DRAWING	VAR DATA PART - 02 *********		A	
2	4	EA	I	5036516	-00	INTEGRATED CIRCUIT DIGITAL	TTLS 74S10 * GT NAND 3IN		A	
3	10	EA	I	5036506	-00	INTEGRATED CIRCUIT	TTLS 74S11 * GT AND 3IN		A	
4	3	EA	I	2892079	-00	INTEGRATED CIRCUIT DIGITAL	TTLS 74S20 * GT NAND 4IN		A	
6	2	EA	I	2892081	-00	INTEGRATED CIRCUIT DIGITAL	TTLS 74S64 * GT AOI		A	

UNIVAC PARTS LIST

SPERRY UNIVAC IS A DIVISION OF SPERRY CORPORATION

MFG CODE	ISSUE DATE	CONTROL		DOC NO.	.C	SHEET
J ,W	81/01/06	W 777	PL	W4400619	B	12

TITLE: PC ASSEMBLY - OPTION BD DM357

PCC	ADC	PCD	COMM CODE	CA	U/M	ST	TYPE	SIZE	CLASS
					EA	A	M	C	A

FIND NO.	QUANTITY REQUIRED	U/M	PCC	PART OR IDENT NO. DOCUMENT NO.	DASH	EIR AND PART DESCRIPTION INFORMATION	ECC	ST	CHG
8	13	EA	I	9004323	-01	INTEGRATED CIRCUIT DIGITAL TTL FF 2 JK ET BT	0	I	
9	3	EA		W4900171	-00	INTEGRATED CIRCUIT DIGITAL TTLS 74S114 FF JK DUAL ET		A	
12	1	EA		W4900151	-00	INTEGRATED CIRCUIT, DIGITAL TTL 93H72 REG SHF 4BT		A	
13	7	EA		5036524	-00	INTEGRATED CIRCUIT DIGITAL TTL 3404 * FF LATCH 6BT		I	
14	2	EA		W4800005	-00	OPOELECTRONIC COUPLER PLASTIC		A	
15	1	EA		W4900348	-00	INTEGRATED CIRCUIT, DIGITAL CMOS 6402 UART		A	
16	1	EA		W4900182	-00	INTEGRATED CIRCUIT, DIGITAL TTLS 74S113 FF DUAL JK ET		A	
17	1	EA	I	3008182	-00	INTEGRATED CIRCUIT TTL 7402 * GT NOR 2IN		I	
19	4	EA	I	2899587	-00	INTEGRATED CIRCUIT DIGITAL TTL 74175 * FF D QUAD		A	
21	16	EA		W4900176	-00	INTEGRATED CIRCUIT, DIGITAL TTL 75122 LN RECEIVER		A	
22	2	EA		W4900175	-00	INTEGRATED CIRCUIT, DIGITAL TTL 82862 9BT PARTY GEN		A	
23	1	EA	I	9001407	-01	INTEGRATED CIRCUIT DIGITAL TTL DEC BIN 1 OF 8 BT	0	I	
25	12	EA	I	5036515	-00	INTEGRATED CIRCUIT TTLH 74H00 * GT NAND 2IN		I	
26	10	EA	I	2899571	-00	INTEGRATED CIRCUIT DIGITAL TTLS 74S00 * GT NAND 2IN		A	
27	6	EA	I	3013354	-00	INTEGRATED CIRCUIT TTLH 74H01 * GT NAND 2IN		I	
28	7	EA	I	2899412	-00	INTEGRATED CIRCUIT LINEAR TTL 7403 * GT NAND 2IN		A	
30	4	EA		6558675	-00	INTEGRATED CIRCUIT		A	
34	9	EA	I	2899573	-00	INTEGRATED CIRCUIT DIGITAL TTLH 74H11 * GT AND 3IN		I	
35	1	EA	I	3008089	-00	INTEGRATED CIRCUIT TTL 7413 * GT NAND 4IN		I	
36	1	EA	I	3008187	-00	INTEGRATED CIRCUIT TTL 7420 * GT NAND 4IN		I	
37	8	EA	I	3013355	-00	INTEGRATED CIRCUIT-IC192 TTLH 74H21 * GT AND 4IN		I	
38	1	EA		3013468	-00	INTEGRATED CIRCUIT - IC204 TTLH 74H30 * GT NAND 8IN		I	
39	34	EA		W4900128	-01	INTEGRATED CIRCUIT, DIGITAL TTL 7438 QUAD 2IN NAND		I	
42	3	EA		W4900093	-01	INTEGRATED CIRCUIT, DIGITAL TTLH 74H50		A	
43	1	EA	I	5036519	-00	INTEGRATED CIRCUIT DIGITAL 2, 2WIDE 2INPUT AND/OR INVERT		I	

UNIVAC PARTS LIST
SPERRY UNIVAC IS A DIVISION OF SPERRY CORPORATION

MFG CODE	ISSUE DATE	CONTROL		DOC NO.	AC	SHEET
J ,W	81/01/06	W 777	PL	W4400619	8	13

TITLE	PCC	ADC	PCD	COMM CODE	CA	U/M	ST	TYPE	SIZE	CLASS
PC ASSEMBLY - OPTION 8D DM357						EA	A	M	C	A

FIND NO.	QUANTITY REQUIRED	U/M	PCC	PART OR IDENT NO. DOCUMENT NO.	DASH	EIR AND PART DESCRIPTION INFORMATION	ECC	ST	CHG
44	1	EA	I	9004329	-01	INTEGRATED CIRCUIT DIGITAL TTL GT 2-2-2-3 AOXI	0	I	
46	10	EA	I	3008194	-00	INTEGRATED CIRCUIT TTL 7474 * FF D DUAL		I	
47	11	EA	I	5036157	-00	INTEGRATED CIRCUIT DIGITAL DUAL D TYPE EDGE TRIG, F-F		A	
48	2	EA	I	3008195	-00	INTEGRATED CIRCUIT TTL 7475 * REG LATCH 4BT		I	
49	4	EA	I	3006204	-00	INTEGRATED CIRCUIT - IC7 TTL 7493 * CNTR 4BT		I	
50	6	EA	I	9004321	-01	INTEGRATED CIRCUIT DIGITAL TTL FF 2 JK ET 8T	0	I	
51	2	EA	I	3007952	-00	INTEGRATED CIRCUIT TTL 74123 * MVB DUAL RGT		I	
52	1	EA	I	4915632	-00	INTEGRATED CIRCUIT TTL 74150 MLPX 1 OF 16		I	
53	8	EA		2899585	-00	INTEGRATED CIRCUIT DIGITAL TTL 74170 * REG FILE 4X4		A	
54	3	EA	I	3007845	-00	INTEGRATED CIRCUIT TTL 74193 * CNTR 4BT U/D		I	
55	6	EA		2510193	-00	INTEGRATED CIRCUIT,DIGITAL		I	
56	2	EA	I	3008031	-00	INTEGRATED CIRCUIT TTL 74122 * MVB RGT W/C		I	
57	3	EA		W4900010	-00	INTEGRATED CIRCUIT, DIGITAL DTL 844 * GT 2IN NAND		A	
58	16	EA	I	5036505	-00	INTEGRATED CIRCUIT TTLH 74H08 * GT AND 2IN		I	
59	3	EA	I	5036522	-00	INTEGRATED CIRCUIT DIGITAL TTL 3003 * GT OR 2IN		I	
60	3	EA	I	2899586	-00	INTEGRATED CIRCUIT DIGITAL TTL 74174 * FF HEX D		A	
61	2	EA		W8001000	-04	DELAY LINE 30.00NSEC TD 3TERM 390 OHM		A	
				REF DES	(1)	DL1,DL2,			
63	18	EA		W6502500	362	RES,FXD,COMPOSITION,1/4W,5% 3600 OHMS		A	
				REF DES	(1)	R1-R18,			
64	4	EA		W6502500	121	RES,FXD,COMPOSITION,1/4W,5% 120 OHMS		A	
				REF DES	(1)	R19-R21,R86,			
67	4	EA		W7100004	101	CAPACITOR, FIXED, CERAMIC DIEL 1.0 UF +80%, -20%		A	
				REF DES	(1)	C1,C2,C8,C9,			
68	2	EA		W6502500	123	RES,FXD,COMPOSITION,1/4W,5% 12K		A	

UNIVAC PARTS LIST

SPERRY UNIVAC IS A DIVISION OF SPERRY CORPORATION

MFG CODE	ISSUE DATE	CONTROL		DOC NO.		SHEET
J ,W	81/01/06	W 777	PL	W4400619	8	14

TITLE	PCC	ADC	PCD	COMM CODE	CA	U/M	ST	TYPE	SIZE	CLASS
PC ASSEMBLY - OPTION 80 DM357						EA	A	M	C	A

FIND NO.	QUANTITY REQUIRED	U/M	PCC	PART OR IDENT NO. DOCUMENT NO.	DASH	EIR AND PART DESCRIPTION INFORMATION	ECC	ST	CHG
				REF DES	(1)	R31,R56,			
69	30	EA		W6502500	471	RES,FXD,COMPOSITION,1/4W,5% 470 OHMS		A	
				REF DES	(1)	R22,R23,R34,R27-R30, (2) R39,R62,R63-R81,R57,			
				REF DES	(3)	R58,			
72	1	EA		W6502500	182	RES,FXD,COMPOSITION,1/4W,5% 1800 OHMS		A	
				REF DES	(1)	R37,			
73	24	EA		W6502500	102	RES,FXD,COMPOSITION,1/4W,5% 1000 OHMS		A	
				REF DES	(1)	R24,R33,R35,R36,R38, (2) R41,R43,R45,R47,R48,			
				REF DES	(3)	R60,R61,R87-R90,R83, (4) R95-R101,			
74	1	EA		W6502500	303	RES,FXD,COMPOSITION,1/4W,5% 30K		A	
				REF DES	(1)	R42,			
75	1	EA		W6502500	223	RES,FXD,COMPOSITION,1/4W,5% 22K		A	
				REF DES	(1)	R44,			
76	1	EA		W6502500	203	RES,FXD,COMPOSITION,1/4W,5% 20K		A	
				REF DES	(1)	R46,			
77	2	EA		W6502500	151	RES,FXD,COMPOSITION,1/4W,5% 150 OHMS		A	
				REF DES	(1)	R32,R49,			
78	1	EA		W6502500	513	RES,FXD,COMPOSITION,1/4W,5% 51K		A	
				REF DES	(1)	R50,			
79	1	EA		W6502500	512	RES,FXD,COMPOSITION,1/4W,5% 5100 OHMS		A	
				REF DES	(1)	R92,			
80	2	EA		W6502010	202	RESISTOR, FIXED, COMPOSITION 2 K 5% 2W		A	
				REF DES	(1)	R51,R55,			
81	1	EA		W6501010	471	RESISTOR, FIXED, COMPOSITION 470 OHMS 5% 1W		A	
				REF DES	(1)	R53,			

SPERRY UNIVAC PARTS LIST

SPERRY UNIVAC IS A DIVISION OF SPERRY CORPORATION

MFG CODE	ISSUE DATE	CONTROL		DOC NO.	AC	SHEET
J ,W	81/01/06	W 777	PL	W4400619	8	15

TITLE: PC ASSEMBLY - OPTION 80 DM357

PCC	ADC	PCD	COMM CODE	CA	U/M	ST	TYPE	SIZE	CLASS
					EA	A	M	C	A

FIND NO.	QUANTITY REQUIRED	U/M	PCC	PART OR IDENT NO. DOCUMENT NO.	DASH	EIR AND PART DESCRIPTION INFORMATION	ECC	ST	CHG
82	1	EA		W6501010	101	RESISTOR, FIXED, COMPOSITION 100 OHMS 5% 1W		A	
				REF DES	(1)	R52,			
84	2	EA		W6502500	391	RES,FXD,COMPOSITION,1/4W,5% 390 OHMS		A	
				REF DES	(1)	R59,R82,			
85	1	EA	C	4916657	-06	CAP FXD CER DIEL 50V +80 - 20% 100K PF		A	
				REF DES	(1)	C4,			
86	1	EA		W7100352	154	CAPACITOR, FIXED, TANT DIEL 35V 10% 150 PF		A	
				REF DES	(1)	C3,			
87	1	EA		W6901500	221	CAPACITOR, FIXED, MICA DIEL 500V 5% 220 PF		A	
				REF DES	(1)	C5,			
88	1	EA		W6901500	151	CAPACITOR, FIXED, MICA DIEL 500V 5% 150 PF		A	
				REF DES	(1)	C6,			
89	1	EA		W6901500	330	CAPACITOR, FIXED, MICA DIEL 500V 5% 33 PF		A	
				REF DES	(1)	C7,			
90	65	EA		6630012	-05	CAPACITOR, FIXED, CERAMIC DIEL ,010 UF,50VDC,+80%,-20%		A	
				REF DES	(1)	C12,C15,C16,C19,C21, (2) C23,C25-C27,C29,C31,			
				REF DES	(3)	C32,C34-C36,C40,C43- (4) C45,C47,C49,C51,C53,			
				REF DES	(5)	C55,C57,C59,C63,C64, (6) C66,C67,C70,C71,C75-			
				REF DES	(7)	C80,C83-C85,C87,C91- (8) C93,C95,C98,C101-			
				REF DES	(9)	C104,C106,C109-C111, (10) C113,C114,C116,C117,			
				REF DES	(11)	C119,C122,C124-C126, (12) C128,			
92	2	EA		W7701017	-00	SEMICONDUCTOR DEVICE, DIODE 200MA		A	
				REF DES	(1)	CR1,CR2,			
93	2	EA	D	2899056	-00	SEMICONDUCTOR DEVICE DIODE SILICON POWER 1N4003		A	
				REF DES	(1)	CR3,CR4,			

UNIVAC PARTS LIST

SPERRY UNIVAC IS A DIVISION OF SPERRY CORPORATION

MFG CODE	ISSUE DATE	CONTROL		DOC NO.		SHEET
J ,W	81/01/06	W 777	PL	W4400619	8	16

TITLE	PCC	ADC	PCD	COMM CODE	CA	U/M	ST	TYPE	SIZE	CLASS
PC ASSEMBLY - OPTION 8D DM357						EA	A	M	C	A

FIND NO.	QUANTITY REQUIRED	U/M	PCC	PART OR IDENT NO. DOCUMENT NO.	DASH	EIR AND PART DESCRIPTION INFORMATION		ECC	ST	CHG
94	1	EA		W7600019	-00	TRANSISTOR	PNP VCBO 150V 5.6MW BETA20		A	
				REF DES	(1)	Q1,				
96	5	EA		W4800007	-00	RESISTOR NETWORK, FIXED	28ELEMT1.5 W 2% 200AND 300		A	
100	5	EA	I	5036504	-00	INTEGRATED CIRCUIT DIGITAL	TTLS 74S04 * GT HEX INVERT		A	
101	24	EA	I	3007755	-00	INTEGRATED CIRCUIT	TTLH 74H04 * GT HEX INVERT		I	
102	2	EA	I	3008186	-00	INTEGRATED CIRCUIT	TTL 7410 * GT NAND 3IN		I	
103	6	EA	I	5036146	-00	INTEGRATED CIRCUIT DIGITAL	TTLS 74S74 * FF DUAL D		A	
104	2	EA	I	9004633	-01	INTEGRATED CIRCUIT DIGITAL	TTLS 74S112 * FF DUAL JK		A	
108	267	EA		W5800062	-09	CONTACT ELECTRICAL, WIRE WARP	PLATING, GOLD		A	
109	2	EA		W5700295	-00	CONN, PRINTED CIRCUIT, ELEC	SLDR MTD 40 FIXED PINS		A	
				REF DES	(1)	J7A,J7B,				
110	1	EA		W5700296	-00	CONNECTOR, RECTANGULAR, ELEC	9 FIXED SOCKETS RECP		A	
				REF DES	(1)	J8,				
113	76	EA		W2600038	-00	CLIP, RETAINING	.006 THK, BERYLLIUM COPPER		A	
114	1	EA		W7800108	-00	SWITCH, TOGGLE, LEVER	2 POSITION		A	
				REF DES	(1)	S1,				
115	1	EA		W5800189	-00	CONNECTOR, COAXIAL, ELECTRICAL	1000 VOLTS, 50 OHMS		A	
				REF DES	(1)	TP1,				
116	2	EA		W5700296	-02	CONNECTOR, RECTANGULAR, ELEC	BRACKET		A	
119	AR	IN		W5400001	124	INSULATION SLEEVING, ELEC	SIZE 24 BLACK .022 ID		A	
120	2	EA		W2100062	-01	SCREW, MACH, PAN HEAD	STL PASS XREC 2-56 .180		A	
121	2	EA		W2202560	-01	WASHER, FLAT	SST PASS.025THK .089ID .219OD		A	
122	2	EA		W2202561	-02	WASHER, LOCK, FLAT	NO. 2		A	
126	1	EA		W6502500	103	RES,FXD,COMPOSITION,1/4W,5%	10K		A	
				REF DES	(1)	R91,				

SPERRY UNIVAC PARTS LIST

SPERRY UNIVAC IS A DIVISION OF SPERRY CORPORATION

MFG CODE	ISSUE DATE	CONTROL		DOC NO.	AC	SHEET
J ,W	81/01/06	W 777	PL	W4400619	B	17

TITLE	PCC	ADC	PCD	COMM CODE	CA	U/M	ST	TYPE	SIZE	CLASS
PC ASSEMBLY - OPTION 80 DM357						EA	A	M	C	A

FIND NO.	QUANTITY REQUIRED		U/M	PCC	PART OR IDENT NO. DOCUMENT NO.	DASH	EIR AND PART DESCRIPTION INFORMATION		ECC	ST	CHG
127	1		EA		W6501010	-331	RESISTOR, FIXED, COMPOSITION	330 OHMS 5% 1W		A	
					REF DES	(1)	R94,				
134	1		EA		W4900169	-01	INTEGRATED CIRCUIT,DIGITAL	TTLS 74S74 * FF D SELECTED		I	
135	1		EA		W8600053	-02	LABEL, IDENTIFICATION	TTY CRT 700 RED LTR WHT BKGD		A	
136	AR		IN		W5300333	-90	WIRE, ELEC	30SLD 300V PVD WHT		A	
*****	*******	***		*	**********	****	SEE TABULATION ON DRAWING	VAR DATA PART - 03 *********		A	
2	4		EA	I	5036516	-00	INTEGRATED CIRCUIT DIGITAL	TTLS 74S10 * GT NAND 3IN		A	
3	9		EA	I	5036506	-00	INTEGRATED CIRCUIT	TTLS 74S11 * GT AND 3IN		A	
4	3		EA	I	2892079	-00	INTEGRATED CIRCUIT DIGITAL	TTLS 74S20 * GT NAND 4IN		A	
6	2		EA	I	2892081	-00	INTEGRATED CIRCUIT DIGITAL	TTLS 74S64 * GT AOI		A	
8	8		EA	I	9004323	-01	INTEGRATED CIRCUIT DIGITAL	TTL FF 2 JK ET BT	0	I	
9	3		EA		W4900171	-00	INTEGRATED CIRCUIT DIGITAL	TTLS 74S114 FF JK DUAL ET		A	
12	1		EA		W4900151	-00	INTEGRATED CIRCUIT, DIGITAL	TTL 93H72 REG SHF 4BT		A	
13	7		EA		5036524	-00	INTEGRATED CIRCUIT DIGITAL	TTL 3404 * FF LATCH 6BT		I	
14	2		EA		W4800005	-00	OPOELECTRONIC COUPLER	PLASTIC		A	
15	1		EA		W4900348	-00	INTEGRATED CIRCUIT, DIGITAL	CMOS 6402 UART		A	
16	1		EA		W4900182	-00	INTEGRATED CIRCUIT, DIGITAL	TTLS 74S113 FF DUAL JK ET		A	
17	1		EA	I	3008182	-00	INTEGRATED CIRCUIT	TTL 7402 * GT NOR 2IN		I	
21	16		EA		W4900176	-00	INTEGRATED CIRCUIT, DIGITAL	TTL 75122 LN RECEIVER		A	
22	2		EA		W4900175	-00	INTEGRATED CIRCUIT, DIGITAL	TTL 82S62 9BT PARTY GEN		A	
23	1		EA	I	9001407	-01	INTEGRATED CIRCUIT DIGITAL	TTL DEC BIN 1 OF 8 BT	0	I	
25	12		EA	I	5036515	-00	INTEGRATED CIRCUIT	TTLH 74H00 * GT NAND 2IN		I	
26	9		EA	I	2899571	-00	INTEGRATED CIRCUIT DIGITAL	TTLS 74S00 * GT NAND 2IN		A	
27	6		EA	I	3013354	-00	INTEGRATED CIRCUIT	TTLH 74H01 * GT NAND 2IN		I	
28	1		EA	I	2899412	-00	INTEGRATED CIRCUIT LINEAR	TTL 7403 * GT NAND 2IN		A	

UNIVAC PARTS LIST

SPERRY UNIVAC IS A DIVISION OF SPERRY CORPORATION

MFG CODE	ISSUE DATE	CONTROL		DOC NO.	C	SHEET
J ,W	81/01/06	W 777	PL	W4400619	B	18

TITLE	PCC	ADC	PCD	COMM CODE	CA	U/M	ST	TYPE	SIZE	CLASS
PC ASSEMBLY - OPTION 80 DM357						EA	A	M	C	A

FIND NO.	QUANTITY REQUIRED	U/M	PCC	PART OR IDENT NO. DOCUMENT NO.	DASH	EIR AND PART DESCRIPTION INFORMATION	ECC	ST	CHG
30	4	EA		6558675	-00	INTEGRATED CIRCUIT		A	
34	8	EA	I	2899573	-00	INTEGRATED CIRCUIT DIGITAL TTLH 74H11 * GT AND 3IN		I	
35	1	EA	I	3008089	-00	INTEGRATED CIRCUIT TTL 7413 * GT NAND 4IN		I	
36	1	EA	I	3008187	-00	INTEGRATED CIRCUIT TTL 7420 * GT NAND 4IN		I	
37	7	EA	I	3013355	-00	INTEGRATED CIRCUIT-IC192 TTLH 74H21 * GT AND 4IN		I	
38	1	EA		3013468	-00	INTEGRATED CIRCUIT - IC204 TTLH 74H30 * GT NAND 8IN		I	
39	33	EA		W4900128	-01	INTEGRATED CIRCUIT, DIGITAL TTL 7438 QUAD 2IN NAND		I	
42	3	EA		W4900093	-01	INTEGRATED CIRCUIT, DIGITAL TTLH 74H50		A	
44	1	EA	I	9004329	-01	INTEGRATED CIRCUIT DIGITAL TTL GT 2-2-2-3 AOXI	0	I	
46	10	EA	I	3008194	-00	INTEGRATED CIRCUIT TTL 7474 * FF D DUAL		I	
47	7	EA	I	5036157	-00	INTEGRATED CIRCUIT DIGITAL DUAL D TYPE EDGE TRIG. F-F		A	
48	2	EA	I	3008195	-00	INTEGRATED CIRCUIT TTL 7475 * REG LATCH 4BT		I	
49	4	EA	I	3006204	-00	INTEGRATED CIRCUIT - IC7 TTL 7493 * CNTR 4BT		I	
50	6	EA	I	9004321	-01	INTEGRATED CIRCUIT DIGITAL TTL FF 2 JK ET BT	0	I	
51	2	EA	I	3007952	-00	INTEGRATED CIRCUIT TTL 74123 * MVB DUAL RGT		I	
54	3	EA	I	3007845	-00	INTEGRATED CIRCUIT TTL 74193 * CNTR 4BT U/D		I	
55	6	EA		2510193	-00	INTEGRATED CIRCUIT,DIGITAL		I	
56	2	EA	I	3008031	-00	INTEGRATED CIRCUIT TTL 74122 * MVB RGT W/C		I	
57	3	EA		W4900010	-00	INTEGRATED CIRCUIT, DIGITAL DTL 844 * GT 2IN NAND		A	
58	15	EA	I	5036505	-00	INTEGRATED CIRCUIT TTLH 74H08 * GT AND 2IN		I	
59	3	EA	I	5036522	-00	INTEGRATED CIRCUIT DIGITAL TTL 3003 * GT OR 2IN		I	
60	3	EA	I	2899586	-00	INTEGRATED CIRCUIT DIGITAL TTL 74174 * FF HEX D		A	
61	2	EA		W8001000	-04	DELAY LINE 30.00NSEC TD 3TERM 390 OHM		A	
				REF DES	(1)	DL1,DL2,			
63	18	EA		W6502500	362	RES,FXD,COMPOSITION,1/4W,5% 3600 OHMS		A	

SPERRY UNIVAC PARTS LIST

SPERRY UNIVAC IS A DIVISION OF SPERRY CORPORATION

MFG CODE	ISSUE DATE	CONTROL		DOC NO.	AC	SHEET
J ,W	81/01/06	W 777	PL	W4400619	8	19

TITLE	PCC	ADC	PCD	COMM CODE	CA	U/M	ST	TYPE	SIZE	CLASS
PC ASSEMBLY - OPTION BD DM357						EA	A	M	C	A

FIND NO.	QUANTITY REQUIRED	U/M	PCC	PART OR IDENT NO. DOCUMENT NO.	PART OR IDENT NO. DASH	EIR AND PART DESCRIPTION INFORMATION	ECC	ST	CHG
				REF DES	(1)	R1-R18,			
64	4	EA		W6502500	121	RES,FXD,COMPOSITION,1/4W,5% 120 OHMS		A	
				REF DES	(1)	R19-R21,R86,			
67	4	EA		W7100004	101	CAPACITOR, FIXED, CERAMIC DIEL 1.0 UF +80%, -20%		A	
				REF DES	(1)	C1,C2,C8,C9,			
68	2	EA		W6502500	123	RES,FXD,COMPOSITION,1/4W,5% 12K		A	
				REF DES	(1)	R31,R56,			
69	14	EA		W6502500	471	RES,FXD,COMPOSITION,1/4W,5% 470 OHMS		A	
				REF DES	(1)	R22,R23,R34,R27-R30, (2) R39,R57,R58,R62,R79-			
				REF DES	(3)	R81, R57 R58			
72	1	EA		W6502500	182	RES,FXD,COMPOSITION,1/4W,5% 1800 OHMS		A	
				REF DES	(1)	R37,			
73	21	EA		W6502500	102	RES,FXD,COMPOSITION,1/4W,5% 1000 OHMS		A	
				REF DES	(1)	R24,R33,R35,R36,R38, (2) R41,R43,R45,R47,R48,			
				REF DES	(3)	R83,R87-R90,R95-R97, (4) R99-R101,			
74	1	EA		W6502500	303	RES,FXD,COMPOSITION,1/4W,5% 30K		A	
				REF DES	(1)	R42,			
75	1	EA		W6502500	223	RES,FXD,COMPOSITION,1/4W,5% 22K		A	
				REF DES	(1)	R44,			
76	1	EA		W6502500	203	RES,FXD,COMPOSITION,1/4W,5% 20K		A	
				REF DES	(1)	R46,			
77	2	EA		W6502500	151	RES,FXD,COMPOSITION,1/4W,5% 150 OHMS		A	
				REF DES	(1)	R32,R49,			
78	1	EA		W6502500	513	RES,FXD,COMPOSITION,1/4W,5% 51K		A	
				REF DES	(1)	R50,			

UNIVAC PARTS LIST

SPERRY UNIVAC IS A DIVISION OF SPERRY CORPORATION

MFG CODE	ISSUE DATE	CONTROL		DOC NO.		SHEET
J ,W	81/01/06	W 777	PL	W4400619	8	20

TITLE: PC ASSEMBLY - OPTION 80 DM357

PCC	ADC	PCD	COMM CODE	CA	U/M	ST	TYPE	SIZE	CLASS
					EA	A	M	C	A

FIND NO.	QUANTITY REQUIRED	U/M	PCC	PART OR IDENT NO. DOCUMENT NO.	DASH	EIR AND PART DESCRIPTION INFORMATION	ECC	ST	CHG
79	1	EA		W6502500	512	RES,FXD,COMPOSITION,1/4W,5% 5100 OHMS		A	
				REF DES	(1)	R92,			
80	2	EA		W6502010	202	RESISTOR, FIXED, COMPOSITION 2 K 5% 2W		A	
				REF DES	(1)	R51,R55,			
81	1	EA		W6501010	471	RESISTOR, FIXED, COMPOSITION 470 OHMS 5% 1W		A	
				REF DES	(1)	R53,			
82	1	EA		W6501010	101	RESISTOR, FIXED, COMPOSITION 100 OHMS 5% 1W		A	
				REF DES	(1)	R52,			
84	2	EA		W6502500	391	RES,FXD,COMPOSITION,1/4W,5% 390 OHMS		A	
				REF DES	(1)	R59,R82,			
85	1	EA	C	4916657	-06	CAP FXD CER DIEL 50V +80 - 20% 100K PF		A	
				REF DES	(1)	C4,			
86	1	EA		W7100352	154	CAPACITOR, FIXED, TANT DIEL 35V 10% 150 PF		A	
				REF DES	(1)	C3,			
87	1	EA		W6901500	221	CAPACITOR, FIXED, MICA DIEL 500V 5% 220 PF		A	
				REF DES	(1)	C5,			
88	1	EA		W6901500	151	CAPACITOR, FIXED, MICA DIEL 500V 5% 150 PF		A	
				REF DES	(1)	C6,			
89	1	EA		W6901500	330	CAPACITOR, FIXED, MICA DIEL 500V 5% 33 PF		A	
				REF DES	(1)	C7,			
90	65	EA		6630012	-05	CAPACITOR, FIXED, CERAMIC DIEL .010 UF,50VDC,+80%,-20%		A	
				REF DES	(1)	C12,C15,C16,C19,C21, (2) C23,C25-C27,C29,C31,			
				REF DES	(3)	C32,C34-C36,C40,C43- (4) C45,C47,C49,C51,C53,			
				REF DES	(5)	C55,C57,C59,C63,C64, (6) C66,C67,C70,C71,C75-			
				REF DES	(7)	C80,C83-C85,C87-C91- (8) C93,C95,C98,C101-			

UNIVAC PARTS LIST

SPERRY UNIVAC IS A DIVISION OF SPERRY CORPORATION

MFG CODE	ISSUE DATE	CONTROL		DOC NO.	AC	SHEET
J ,W	81/01/06	W 777	PL	W4400619	8	21

TITLE: PC ASSEMBLY - OPTION 80 DM357

PCC	ADC	PCD	COMM CODE	CA	U/M	ST	TYPE	SIZE	CLASS
					EA	A	M	C	A

FIND NO.	QUANTITY REQUIRED	U/M	PCC	PART OR IDENT NO. DOCUMENT NO.	DASH	EIR AND PART DESCRIPTION INFORMATION	ECC	ST	CHG
				REF DES	(9)	C104,C106,C110,C111, (10) C113,C114,C116,C117,			
				REF DES	(11)	C119,C122,C124-C126, (12) C128,C109,			
92	2	EA		W7701017	-00	SEMICONDUCTOR DEVICE, DIODE 200MA		A	
				REF DES	(1)	CR1,CR2,			
93	2	EA	D	2899056	-00	SEMICONDUCTOR DEVICE DIODE SILICON POWER 1N4003		A	
				REF DES	(1)	CR3,CR4,			
94	1	EA		W7600019	-00	TRANSISTOR PNP VCBO 150V 5.6MW BETA20		A	
				REF DES	(1)	Q1			
96	5	EA		W4800007	-00	RESISTOR NETWORK, FIXED 28ELEMT1.5 W 2% 200AND 300		A	
100	5	EA	I	5036504	-00	INTEGRATED CIRCUIT DIGITAL TTLS 74S04 * GT HEX INVERT		A	
101	23	EA	I	3007755	-00	INTEGRATED CIRCUIT TTLH 74H04 * GT HEX INVERT		I	
102	1	EA	I	3008186	-00	INTEGRATED CIRCUIT TTL 7410 * GT NAND 3IN		I	
103	6	EA	I	5036146	-00	INTEGRATED CIRCUIT DIGITAL TTLS 74S74 * FF DUAL D		A	
104	2	EA	I	9004633	-01	INTEGRATED CIRCUIT DIGITAL TTLS 74S112 * FF DUAL JK		A	
108	259	EA		W5800062	-09	CONTACT ELECTRICAL, WIRE WARP PLATING, GOLD		A	
109	2	EA		W5700295	-00	CONN, PRINTED CIRCUIT, ELEC SLDR MTD 40 FIXED PINS		A	
				REF DES	(1)	J7A,J7B,			
110	1	EA		W5700296	-00	CONNECTOR, RECTANGULAR, ELEC 9 FIXED SOCKETS RECP		A	
				REF DES	(1)	J8,			
113	47	EA		W2600038	-00	CLIP, RETAINING .006 THK, BERYLLIUM COPPER		A	
114	1	EA		W7800108	-00	SWITCH, TOGGLE, LEVER 2 POSITION		A	
				REF DES	(1)	S1,			
115	1	EA		W5800189	-00	CONNECTOR, COAXIAL, ELECTRICAL 1000 VOLTS, 50 OHMS		A	
				REF DES	(1)	TP1,			
116	2	EA		W5700296	-02	CONNECTOR, RECTANGULAR, ELEC BRACKET		A	

UNIVAC PARTS LIST

SPERRY UNIVAC IS A DIVISION OF SPERRY CORPORATION

MFG CODE	ISSUE DATE	CONTROL		DOC NO.		SHEET
J ,W	81/01/06	W 777	PL	W4400619	8	22

TITLE: PC ASSEMBLY - OPTION BD DM357

PCC	ADC	PCD	COMM CODE	CA	U/M	ST	TYPE	SIZE	CLASS
					EA	A	M	C	A

FIND NO.	QUANTITY REQUIRED		U/M	PCC	PART OR IDENT NO. DOCUMENT NO.	DASH	EIR AND PART DESCRIPTION INFORMATION		ECC	ST	CHG
119	AR		IN		W5400001	124	INSULATION SLEEVING, ELEC	SIZE 24 BLACK .022 ID		A	
120	2		EA		W2100062	-01	SCREW, MACH, PAN HEAD	STL PASS XREC 2-56 .180		A	
121	2		EA		W2202560	-01	WASHER, FLAT	SST PASS.025THK .089ID .21900		A	
122	2		EA		W2202561	-02	WASHER, LOCK, FLAT	NO. 2		A	
126	1		EA		W6502500	103	RES,FXD,COMPOSITION,1/4W,5%	10K		A	
					REF DES	(1)	R91,				
127	1		EA		W6501010	331	RESISTOR, FIXED, COMPOSITION	330 OHMS 5% 1W		A	
					REF DES	(1)	R94,				
131	AR		IN		W5300003	-06	WIRE, ELECTRICAL	20 AWG		A	
134	1		EA		W4900169	-01	INTEGRATED CIRCUIT,DIGITAL	TTLS 74S74 * FF D SELECTED		I	
135	1		EA		W8600053	-02	LABEL, IDENTIFICATION	TTY CRT 700 RED LTR WHT BKGD		A	
136	AR		IN		W5300333	-90	WIRE, ELEC	30SLD 300V PVD WHT		A	
*****	*******	***		*	**********	****	SEE TABULATION ON DRAWING	VAR DATA PART - 04 *********		A	
2	2		EA	I	5036516	-00	INTEGRATED CIRCUIT DIGITAL	TTLS 74S10 * GT NAND 3IN		A	
3	6		EA	I	5036506	-00	INTEGRATED CIRCUIT	TTLS 74S11 * GT AND 3IN		A	
4	1		EA	I	2892079	-00	INTEGRATED CIRCUIT DIGITAL	TTLS 74S20 * GT NAND 4IN		A	
6	1		EA	I	2892081	-00	INTEGRATED CIRCUIT DIGITAL	TTLS 74S64 * GT AOI		A	
8	11		EA	I	9004323	-01	INTEGRATED CIRCUIT DIGITAL	TTL FF 2 JK ET BT	0	I	
14	2		EA		W4800005	-00	OPOELECTRONIC COUPLER	PLASTIC		A	
15	1		EA		W4900348	-00	INTEGRATED CIRCUIT, DIGITAL	CMOS 6402 UART		A	
16	1		EA		W4900182	-00	INTEGRATED CIRCUIT, DIGITAL	TTLS 74S113 FF DUAL JK ET		A	
17	1		EA	I	3008182	-00	INTEGRATED CIRCUIT	TTL 7402 * GT NOR 2IN		I	
19	4		EA	I	2899587	-00	INTEGRATED CIRCUIT DIGITAL	TTL 74175 * FF D QUAD		A	
22	2		EA		W4900175	-00	INTEGRATED CIRCUIT, DIGITAL	TTL 82S62 9BT PARTY GEN		A	
23	1		EA	I	9001407	-01	INTEGRATED CIRCUIT DIGITAL	TTL DEC BIN 1 OF 8 BT	0	I	

SPERRY UNIVAC PARTS LIST

SPERRY UNIVAC IS A DIVISION OF SPERRY CORPORATION

MFG CODE	ISSUE DATE	CONTROL		DOC NO.	AC	SHEET
J ,W	81/01/06	W 777	PL	W4400619	B	23

TITLE	PCC	ADC	PCD	COMM CODE	CA	U/M	ST	TYPE	SIZE	CLASS
PC ASSEMBLY - OPTION 8D DM357						EA	A	M	C	A

FIND NO.	QUANTITY REQUIRED	U/M	PCC	PART OR IDENT NO. DOCUMENT NO.	DASH	EIR AND PART DESCRIPTION INFORMATION	ECC	ST	CHG
25	10	EA	I	5036515	-00	INTEGRATED CIRCUIT TTLH 74H00 * GT NAND 2IN		I	
26	7	EA	I	2899571	-00	INTEGRATED CIRCUIT DIGITAL TTLS 74S00 * GT NAND 2IN		A	
27	6	EA	I	3013354	-00	INTEGRATED CIRCUIT TTLH 74H01 * GT NAND 2IN		I	
28	7	EA	I	2899412	-00	INTEGRATED CIRCUIT LINEAR TTL 7403 * GT NAND 2IN		A	
30	4	EA		6558675	-00	INTEGRATED CIRCUIT		A	
34	9	EA	I	2899573	-00	INTEGRATED CIRCUIT DIGITAL TTLH 74H11 * GT AND 3IN		I	
35	1	EA	I	3008089	-00	INTEGRATED CIRCUIT TTL 7413 * GT NAND 4IN		I	
36	1	EA	I	3008187	-00	INTEGRATED CIRCUIT TTL 7420 * GT NAND 4IN		I	
37	7	EA	I	3013355	-00	INTEGRATED CIRCUIT-IC192 TTLH 74H21 * GT AND 4IN		I	
38	1	EA		3013468	-00	INTEGRATED CIRCUIT - IC204 TTLH 74H30 * GT NAND 8IN		I	
39	16	EA		W4900128	-01	INTEGRATED CIRCUIT, DIGITAL TTL 7438 QUAD 2IN NAND		I	
42	3	EA		W4900093	-01	INTEGRATED CIRCUIT, DIGITAL TTLH 74H50		A	
43	1	EA	I	5036519	-00	INTEGRATED CIRCUIT DIGITAL 2, 2WIDE 2INPUT AND/OR INVERT		I	
46	10	EA	I	3008194	-00	INTEGRATED CIRCUIT TTL 7474 * FF D DUAL		I	
47	11	EA	I	5036157	-00	INTEGRATED CIRCUIT DIGITAL DUAL D TYPE EDGE TRIG, F-F		A	
48	2	EA	I	3008195	-00	INTEGRATED CIRCUIT TTL 7475 * REG LATCH 4BT		I	
49	4	EA	I	3006204	-00	INTEGRATED CIRCUIT - IC7 TTL 7493 * CNTR 4BT		I	
50	3	EA	I	9004321	-01	INTEGRATED CIRCUIT DIGITAL TTL FF 2 JK ET BT	0	I	
51	2	EA	I	3007952	-00	INTEGRATED CIRCUIT TTL 74123 * MVB DUAL RGT		I	
52	1	EA	I	4915632	-00	INTEGRATED CIRCUIT TTL 74150 MLPX 1 OF 16		I	
53	8	EA		2899585	-00	INTEGRATED CIRCUIT DIGITAL TTL 74170 * REG FILE 4X4		A	
54	3	EA	I	3007845	-00	INTEGRATED CIRCUIT TTL 74193 * CNTR 4BT U/D		I	
55	6	EA		2510193	-00	INTEGRATED CIRCUIT,DIGITAL		I	
56	2	EA	I	3008031	-00	INTEGRATED CIRCUIT TTL 74122 * MVB RGT W/C		I	
57	3	EA		W4900010	-00	INTEGRATED CIRCUIT, DIGITAL DTL 844 * GT 2IN NAND		A	

UNIVAC PARTS LIST

SPERRY UNIVAC IS A DIVISION OF SPERRY CORPORATION

MFG CODE	ISSUE DATE	CONTROL		DOC NO.		SHEET
J ,W	81/01/06	W 777	PL	W4400619	8	24

TITLE	PCC	ADC	PCD	COMM CODE	CA	U/M	ST	TYPE	SIZE	CLASS
PC ASSEMBLY - OPTION 8D DH357						EA	A	M	C	A

FIND NO.	QUANTITY REQUIRED	U/M	PCC	PART OR IDENT NO. DOCUMENT NO.	DASH	EIR AND PART DESCRIPTION INFORMATION	ECC	ST	CHG
58	14	EA	I	5036505	-00	INTEGRATED CIRCUIT TTLH 74H08 * GT AND 2IN		I	
59	3	EA	I	5036522	-00	INTEGRATED CIRCUIT DIGITAL TTL 3003 * GT OR 2IN		I	
61	1	EA		W8001000	-04	DELAY LINE 30.00NSEC TD 3TERM 390 OHM		A	
				REF DES	(1)	DL1,			
63	18	EA		W6502500	362	RES,FXD,COMPOSITION,1/4W,5% 3600 OHMS		A	
				REF DES	(1)	R1-R18,			
64	4	EA		W6502500	121	RES,FXD,COMPOSITION,1/4W,5% 120 OHMS		A	
				REF DES	(1)	R19-R21,R86,			
67	4	EA		W7100004	101	CAPACITOR, FIXED, CERAMIC DIEL 1.0 UF +80%, -20%		A	
				REF DES	(1)	C1,C2,C8,C9,			
68	2	EA		W6502500	123	RES,FXD,COMPOSITION,1/4W,5% 12K		A	
				REF DES	(1)	R31,R56,			
69	28	EA		W6502500	471	RES,FXD,COMPOSITION,1/4W,5% 470 OHMS		A	
				REF DES	(1)	R22,R23,R27-R30,R34, (2) R39,R62,R75-R78,R80,			
				REF DES	(3)	R57,R58,R63-R74,			
72	1	EA		W6502500	182	RES,FXD,COMPOSITION,1/4W,5% 1800 OHMS		A	
				REF DES	(1)	R37,			
73	23	EA		W6502500	102	RES,FXD,COMPOSITION,1/4W,5% 1000 OHMS		A	
				REF DES	(1)	R24,R33,R35,R36,R38, (2) R41,R43,R45,R47,R48,			
				REF DES	(3)	R60,R61,R83,R87-R90, (4) R95,R96,R98-R101,			
74	1	EA		W6502500	303	RES,FXD,COMPOSITION,1/4W,5% 30K		A	
				REF DES	(1)	R42,			
75	1	EA		W6502500	223	RES,FXD,COMPOSITION,1/4W,5% 22K		A	
				REF DES	(1)	R44,			
76	1	EA		W6502500	203	RES,FXD,COMPOSITION,1/4W,5% 20K		A	

UNIVAC PARTS LIST
SPERRY UNIVAC IS A DIVISION OF SPERRY CORPORATION

MFG CODE	ISSUE DATE	CONTROL		DOC NO.	AC	SHEET
J ,W	81/01/06	W 777	PL	W4400619	B	25

TITLE: PC ASSEMBLY - OPTION 80 DM357

PCC	ADC	PCD	COMM CODE	CA	U/M	ST	TYPE	SIZE	CLASS
					EA	A	M	C	A

FIND NO.	QUANTITY REQUIRED	U/M	PCC	PART OR IDENT NO. DOCUMENT NO.	DASH	EIR AND PART DESCRIPTION INFORMATION	ECC	ST	CHG
				REF DES	(1)	R46,			
77	2	EA		W6502500	151	RES,FXD,COMPOSITION,1/4W,5% 150 OHMS		A	
				REF DES	(1)	R32,R49,			
78	1	EA		W6502500	513	RES,FXD,COMPOSITION,1/4W,5% 51K		A	
				REF DES	(1)	R50,			
79	1	EA		W6502500	512	RES,FXD,COMPOSITION,1/4W,5% 5100 OHMS		A	
				REF DES	(1)	R92,			
80	2	EA		W6502010	202	RESISTOR, FIXED, COMPOSITION 2 K 5% 2W		A	
				REF DES	(1)	R51,R55,			
81	1	EA		W6501010	471	RESISTOR, FIXED, COMPOSITION 470 OHMS 5% 1W		A	
				REF DES	(1)	R53,			
82	1	EA		W6501010	101	RESISTOR, FIXED, COMPOSITION 100 OHMS 5% 1W		A	
				REF DES	(1)	R52,			
84	1	EA		W6502500	391	RES,FXD,COMPOSITION,1/4W,5% 390 OHMS		A	
				REF DES	(1)	R59,			
85	1	EA	C	4916657	-06	CAP FXD CER DIEL 50V +80 - 20% 100K PF		A	
				REF DES	(1)	C4,			
86	1	EA		W7100352	154	CAPACITOR, FIXED, TANT DIEL 35V 10% 150 PF		A	
				REF DES	(1)	C3,			
87	1	EA		W6901500	221	CAPACITOR, FIXED, MICA DIEL 500V 5% 220 PF		A	
				REF DES	(1)	C5,			
88	1	EA		W6901500	151	CAPACITOR, FIXED, MICA DIEL 500V 5% 150 PF		A	
				REF DES	(1)	C6,			
89	1	EA		W6901500	330	CAPACITOR, FIXED, MICA DIEL 500V 5% 33 PF		A	
				REF DES	(1)	C7,			

UNIVAC PARTS LIST

SPERRY UNIVAC IS A DIVISION OF SPERRY CORPORATION

MFG CODE	ISSUE DATE	CONTROL		DOC NO.		SHEET
J ,W	81/01/06	W 777	PL	W4400619	B	26

TITLE: PC ASSEMBLY - OPTION BD DM357

PCC	ADC	PCD	COMM CODE	CA	U/M	ST	TYPE	SIZE	CLASS
					EA	A	M	C	A

FIND NO.	QUANTITY REQUIRED	U/M	PCC	PART OR IDENT NO. DOCUMENT NO.	DASH	EIR AND PART DESCRIPTION INFORMATION	ECC	ST	CHG
90	65	EA		6630012	-05	CAPACITOR, FIXED, CERAMIC DIEL .010 UF,50VDC,+80%,-20%		A	
				REF DES	(1)	C12,C15,C16,C19,C21, (2) C23,C25-C27,C29,C31,			
				REF DES	(3)	C32,C34-C36,C40,C43- (4) C45,C47,C49,C51,C53,			
				REF DES	(5)	C55,C57,C59,C63,C64, (6) C66,C67,C70,C71,C75-			
				REF DES	(7)	C80,C83-C85,C87,C91- (8) C93,C95,C98,C101-			
				REF DES	(9)	C104,C106,C109,C110, (10) C111,C113,C114,C116,			
				REF DES	(11)	C117,C119,C122,C124- (12) C126,C128,			
92	2	EA		W7701017	-00	SEMICONDUCTOR DEVICE, DIODE 200MA		A	
				REF DES	(1)	CR1,CR2,			
93	2	EA	D	2899056	-00	SEMICONDUCTOR DEVICE DIODE SILICON POWER 1N4003		A	
				REF DES	(1)	CR3,CR4,			
94	1	EA		W7600019	-00	TRANSISTOR PNP VCBO 150V 5.6MW BETA20		A	
				REF DES	(1)	Q1,			
96	1	EA		W4800007	-00	RESISTOR NETWORK, FIXED 28ELEMT1.5 W 2% 200AND 300		A	
100	4	EA	I	5036504	-00	INTEGRATED CIRCUIT DIGITAL TTLS 74S04 * GT HEX INVERT		A	
101	20	EA	I	3007755	-00	INTEGRATED CIRCUIT TTLH 74H04 * GT HEX INVERT		I	
102	2	EA	I	3008186	-00	INTEGRATED CIRCUIT TTL 7410 * GT NAND 3IN		I	
103	3	EA	I	5036146	-00	INTEGRATED CIRCUIT DIGITAL TTLS 74S74 * FF DUAL D		A	
104	1	EA	I	9004633	-01	INTEGRATED CIRCUIT DIGITAL TTLS 74S112 * FF DUAL JK		A	
108	250	EA		W5000062	-09	CONTACT ELECTRICAL, WIRE WARP PLATING, GOLD		A	
110	1	EA		W5700296	-00	CONNECTOR, RECTANGULAR, ELEC 9 FIXED SOCKETS RECP		A	
				REF DES	(1)	J8,			
113	71	EA		W2600038	-00	CLIP, RETAINING .006 THK, BERYLLIUM COPPER		A	
114	1	EA		W7800108	-00	SWITCH, TOGGLE, LEVER 2 POSITION		A	
				REF DES	(1)	S1,			

UNIVAC PARTS LIST

SPERRY UNIVAC IS A DIVISION OF SPERRY CORPORATION

MFG CODE	ISSUE DATE	CONTROL		DOC NO.	AC	SHEET
J ,W	81/01/06	W 777	PL	W4400619	B	27

TITLE	PCC	ADC	PCD	COMM CODE	CA	U/M	ST	TYPE	SIZE	CLASS
PC ASSEMBLY - OPTION BD DM357						EA	A	M	C	A

FIND NO.	QUANTITY REQUIRED	U/M	PCC	PART OR IDENT NO. DOCUMENT NO.	DASH	EIR AND PART DESCRIPTION INFORMATION	ECC	ST	CHG
115	1	EA		W5800189	-00	CONNECTOR, COAXIAL, ELECTRICAL 1000 VOLTS, 50 OHMS		A	
				REF DES	(1)	TP1,			
116	2	EA		W5700296	-02	CONNECTOR, RECTANGULAR, ELEC BRACKET		A	
119	AR	IN		W5400001	124	INSULATION SLEEVING, ELEC SIZE 24 BLACK ,022 ID		A	
120	2	EA		W2100062	-01	SCREW, MACH, PAN HEAD SIL PASS XREC 2-56 .180		A	
121	2	EA		W2202560	-01	WASHER, FLAT SST PASS,025THK .089ID .219OD		A	
122	2	EA		W2202561	-02	WASHER, LOCK, FLAT NO. 2		A	
126	1	EA		W6502500	103	RES,FXD,COMPOSITION,1/4W,5% 10K		A	
				REF DES	(1)	R91,			
127	1	EA		W6501010	331	RESISTOR, FIXED, COMPOSITION 330 OHMS 5% 1W		A	
				REF DES	(1)	R94,			
130	1	EA		W0101653	-00	OPTION BD - MOD KIT		A	
134	1	EA		W4900169	-01	INTEGRATED CIRCUIT,DIGITAL TTLS 74S74 * FF D SELECTED		I	
136	AR	IN		W5300333	-90	WIRE, ELEC 30SLD 300V PVD WHT		A	
*****	*******	***	*	**********	****	SEE TABULATION ON DRAWING VAR DATA PART - 05 *********		A	
2	4	EA	I	5036516	-00	INTEGRATED CIRCUIT DIGITAL TTLS 74S10 * GT NAND 3IN		A	
3	10	EA	I	5036506	-00	INTEGRATED CIRCUIT TTLS 74S11 * GT AND 3IN		A	
4	3	EA	I	2892079	-00	INTEGRATED CIRCUIT DIGITAL TTLS 74S20 * GT NAND 4IN		A	
6	2	EA	I	2892081	-00	INTEGRATED CIRCUIT DIGITAL TTLS 74S64 * GT AOI		A	
8	13	EA	I	9004323	-01	INTEGRATED CIRCUIT DIGITAL TTL FF 2 JK ET BT	0	I	
9	3	EA		W4900171	-00	INTEGRATED CIRCUIT DIGITAL TTLS 74S114 FF JK DUAL ET		A	
12	1	EA		W4900151	-00	INTEGRATED CIRCUIT, DIGITAL TTL 93H72 REG SHF 4BT		A	
13	7	EA		5036524	-00	INTEGRATED CIRCUIT DIGITAL TTL 3404 * FF LATCH 6BT		I	
14	2	EA		W4800005	-00	OPOELECTRONIC COUPLER PLASTIC		A	
15	1	EA		W4900346	-00	INTEGRATED CIRCUIT, DIGITAL CMOS 6402 UART		A	

UNIVAC PARTS LIST

SPERRY UNIVAC IS A DIVISION OF SPERRY CORPORATION

MFG CODE	ISSUE DATE	CONTROL		DOC NO.		SHEET
J ,W	81/01/06	W 777	PL	W4400619	8	28

TITLE	PCC	ADC	PCD	COMM CODE	CA	U/M	ST	TYPE	SIZE	CLASS
PC ASSEMBLY - OPTION 8D DM357						EA	A	M	C	A

FIND NO.	QUANTITY REQUIRED	U/M	PCC	PART OR IDENT NO. DOCUMENT NO.	DASH	EIR AND PART DESCRIPTION INFORMATION	ECC	ST	CHG
16	1	EA		W4900182	-00	INTEGRATED CIRCUIT, DIGITAL TTLS 74S113 FF DUAL JK ET		A	
17	1	EA	I	3008182	-00	INTEGRATED CIRCUIT TTL 7402 * GT NOR 2IN		I	
19	4	EA	I	2899587	-00	INTEGRATED CIRCUIT DIGITAL TTL 74175 * FF D QUAD		A	
21	16	EA		W4900176	-00	INTEGRATED CIRCUIT, DIGITAL TTL 75122 LN RECEIVER		A	
22	2	EA		W4900175	-00	INTEGRATED CIRCUIT, DIGITAL TTL 82S62 9BT PARTY GEN		A	
23	1	EA	I	9001407	-01	INTEGRATED CIRCUIT DIGITAL TTL DEC BIN 1 OF 8 BT	0	I	
25	12	EA	I	5036515	-00	INTEGRATED CIRCUIT TTLH 74H00 * GT NAND 2IN		I	
26	10	EA	I	2899571	-00	INTEGRATED CIRCUIT DIGITAL TTLS 74S00 * GT NAND 2IN		A	
27	6	EA	I	3013354	-00	INTEGRATED CIRCUIT TTLH 74H01 * GT NAND 2IN		I	
28	7	EA	I	2899412	-00	INTEGRATED CIRCUIT LINEAR TTL 7403 * GT NAND 2IN		A	
30	4	EA		6558675	-00	INTEGRATED CIRCUIT		A	
34	9	EA	I	2899573	-00	INTEGRATED CIRCUIT DIGITAL TTLH 74H11 * GT AND 3IN		I	
35	1	EA	I	3008089	-00	INTEGRATED CIRCUIT TTL 7413 * GT NAND 4IN		I	
36	1	EA	I	3008187	-00	INTEGRATED CIRCUIT TTL 7420 * GT NAND 4IN		I	
37	8	EA	I	3013355	-00	INTEGRATED CIRCUIT-IC192 TTLH 74H21 * GT AND 4IN		I	
38	1	EA		3013468	-00	INTEGRATED CIRCUIT - IC204 TTLH 74H30 * GT NAND 8IN		I	
39	34	EA		W4900128	-01	INTEGRATED CIRCUIT, DIGITAL TTL 7438 QUAD 2IN NAND		I	
42	3	EA		W4900093	-01	INTEGRATED CIRCUIT, DIGITAL TTLH 74H50		A	
43	1	EA	I	5036519	-00	INTEGRATED CIRCUIT DIGITAL 2, 2WIDE 2INPUT AND/OR INVERT		I	
44	1	EA	I	9004329	-01	INTEGRATED CIRCUIT DIGITAL TTL GT 2-2-2-3 AOXI	0	I	
46	10	EA	I	3008194	-00	INTEGRATED CIRCUIT TTL 7474 * FF D DUAL		I	
47	11	EA	I	5036157	-00	INTEGRATED CIRCUIT DIGITAL DUAL D TYPE EDGE TRIG. F-F		A	
48	2	EA	I	3008195	-00	INTEGRATED CIRCUIT TTL 7475 * REG LATCH 4BT		I	
49	4	EA	I	3006204	-00	INTEGRATED CIRCUIT - IC7 TTL 7493 * CNTR 4BT		I	
50	6	EA	I	9004321	-01	INTEGRATED CIRCUIT DIGITAL TTL FF 2 JK ET BT	0	I	

UNIVAC PARTS LIST
SPERRY UNIVAC IS A DIVISION OF SPERRY CORPORATION

MFG CODE	ISSUE DATE	CONTROL		DOC NO.	AC	SHEET
J ,W	81/01/06	W 777	PL	W4400619	8	30

TITLE: PC ASSEMBLY - OPTION BD DM357

PCC	ADC	PCD	COMM CODE	CA	U/M	ST	TYPE	SIZE	CLASS
					EA	A	M	C	A

FIND NO.	QUANTITY REQUIRED	U/M	PCC	PART OR IDENT NO. DOCUMENT NO.	DASH	EIR AND PART DESCRIPTION INFORMATION	ECC	ST	CHG
73	24	EA		W6502500	102	RES,FXD,COMPOSITION,1/4W,5% 1000 OHMS		A	
				REF DES	(1)	R24,R33,R35,R36,R38, (2) R41,R43,R45,R47,R48,			
				REF DES	(3)	R60,R61,R83,R87-R90, (4) R95-R101,			
74	1	EA		W6502500	303	RES,FXD,COMPOSITION,1/4W,5% 30K		A	
				REF DES	(1)	R42,			
75	1	EA		W6502500	223	RES,FXD,COMPOSITION,1/4W,5% 22K		A	
				REF DES	(1)	R44,			
76	1	EA		W6502500	203	RES,FXD,COMPOSITION,1/4W,5% 20K		A	
				REF DES	(1)	R46,			
77	2	EA		W6502500	151	RES,FXD,COMPOSITION,1/4W,5% 150 OHMS		A	
				REF DES	(1)	R32,R49,			
78	1	EA		W6502500	513	RES,FXD,COMPOSITION,1/4W,5% 51K		A	
				REF DES	(1)	R50,			
79	1	EA		W6502500	512	RES,FXD,COMPOSITION,1/4W,5% 5100 OHMS		A	
				REF DES	(1)	R92,			
80	2	EA		W6502010	202	RESISTOR, FIXED, COMPOSITION 2 K 5% 2W		A	
				REF DES	(1)	R51,R55,			
81	1	EA		W6501010	471	RESISTOR, FIXED, COMPOSITION 470 OHMS 5% 1W		A	
				REF DES	(1)	R53,			
82	1	EA		W6501010	101	RESISTOR, FIXED, COMPOSITION 100 OHMS 5% 1W		A	
				REF DES	(1)	R52,			
84	2	EA		W6502500	391	RES,FXD,COMPOSITION,1/4W,5% 390 OHMS		A	
				REF DES	(1)	R59,R82,			
85	1	EA	C	4916657	-06	CAP FXD CER DIEL 50V +80 - 20% 100K PF		A	
				REF DES	(1)	C4,			

SPERRY UNIVAC PARTS LIST

SPERRY UNIVAC IS A DIVISION OF SPERRY CORPORATION

MFG CODE	ISSUE DATE	CONTROL		DOC NO.		SHEET
J ,W	81/01/06	W 777	PL	W4400619	8	29

TITLE: PC ASSEMBLY - OPTION BD DM357

PCC	ADC	PCD	COMM CODE	CA	U/M	ST	TYPE	SIZE	CLASS
					EA	A	M	C	A

FIND NO.	QUANTITY REQUIRED	U/M	PCC	PART OR IDENT NO. DOCUMENT NO.	DASH	EIR AND PART DESCRIPTION INFORMATION	ECC	ST	CHG
51	2	EA	I	3007952	-00	INTEGRATED CIRCUIT TTL 74123 * MVB DUAL RGT		I	
52	1	EA	I	4915632	-00	INTEGRATED CIRCUIT TTL 74150 MLPX 1 OF 16		I	
53	8	EA		2899585	-00	INTEGRATED CIRCUIT DIGITAL TTL 74170 * REG FILE 4X4		A	
54	3	EA	I	3007845	-00	INTEGRATED CIRCUIT TTL 74193 * CNTR 4BT U/D		I	
55	6	EA		2510193	-00	INTEGRATED CIRCUIT,DIGITAL		I	
56	2	EA	I	3008031	-00	INTEGRATED CIRCUIT TTL 74122 * MVB RGT W/C		I	
57	3	EA		W4900010	-00	INTEGRATED CIRCUIT, DIGITAL DTL 844 * GT 2IN NAND		A	
58	16	EA	I	5036505	-00	INTEGRATED CIRCUIT TTLH 74H08 * GT AND 2IN		I	
59	3	EA	I	5036522	-00	INTEGRATED CIRCUIT DIGITAL TTL 3003 * GT OR 2IN		I	
60	3	EA	I	2899586	-00	INTEGRATED CIRCUIT DIGITAL TTL 74174 * FF HEX D		A	
61	2	EA		W8001000	-04	DELAY LINE 30.00NSEC TD 3TERM 390 OHM		A	
				REF DES	(1)	DL1,DL2,			
63	18	EA		W6502500	362	RES,FXD,COMPOSITION,1/4W,5% 3600 OHMS		A	
				REF DES	(1)	R1-R18,			
64	4	EA		W6502500	121	RES,FXD,COMPOSITION,1/4W,5% 120 OHMS		A	
				REF DES	(1)	R19-R21,R86,			
67	4	EA		W7100004	101	CAPACITOR, FIXED, CERAMIC DIEL 1.0 UF +80%, -20%		A	
				REF DES	(1)	C1,C2,C8,C9,			
68	2	EA		W6502500	123	RES,FXD,COMPOSITION,1/4W,5% 12K		A	
				REF DES	(1)	R31,R56,			
69	30	EA		W6502500	471	RES,FXD,COMPOSITION,1/4W,5% 470 OHMS		A	
				REF DES	(1)	R22,R23,R27-R30,R34, (2) R39,R62,R75-R81,R63-			
				REF DES	(3)	R74,R57,R58,			
72	1	EA		W6502500	182	RES,FXD,COMPOSITION,1/4W,5% 1800 OHMS		A	
				REF DES	(1)	R37,			

UNIVAC PARTS LIST

SPERRY UNIVAC IS A DIVISION OF SPERRY CORPORATION

MFG CODE	ISSUE DATE	CONTROL		DOC NO.	AC	SHEET
J ,W	81/01/06	W 777	PL	W4400619	8	32

TITLE: PC ASSEMBLY - OPTION BD DM357

PCC	ADC	PCD	COMM CODE	CA	U/M	ST	TYPE	SIZE	CLASS
					EA	A	M	C	A

FIND NO.	QUANTITY REQUIRED		U/M	PCC	PART OR IDENT NO. DOCUMENT NO.	DASH	EIR AND PART DESCRIPTION INFORMATION		ECC	ST	CHG
103	6		EA	I	5036146	-00	INTEGRATED CIRCUIT DIGITAL	TTLS 74S74 * FF DUAL D		A	
104	2		EA	I	9004633	-01	INTEGRATED CIRCUIT DIGITAL	TTLS 74S112 * FF DUAL JK		A	
108	282		EA		W5800062	-09	CONTACT ELECTRICAL, WIRE WARP	PLATING, GOLD		A	
109	2		EA		W5700295	-00	CONN, PRINTED CIRCUIT, ELEC	SLDR MTD 40 FIXED PINS		A	
110	1		EA		W5700296	-00	CONNECTOR, RECTANGULAR, ELEC	9 FIXED SOCKETS RECP		A	
					REF DES	(1)	J8,				
113	76		EA		W2600038	-00	CLIP, RETAINING	.006 THK, BERYLLIUM COPPER		A	
114	1		EA		W7800108	-00	SWITCH, TOGGLE, LEVER	2 POSITION		A	
					REF DES	(1)	S1,				
115	1		EA		W5800189	-00	CONNECTOR, COAXIAL, ELECTRICAL	1000 VOLTS, 50 OHMS		A	
					REF DES	(1)	TP1,				
116	2		EA		W5700296	-02	CONNECTOR, RECTANGULAR, ELEC	BRACKET		A	
119	AR		IN		W5400001	124	INSULATION SLEEVING, ELEC	SIZE 24 BLACK .022 ID		A	
120	2		EA		W2100062	-01	SCREW, MACH, PAN HEAD	STL PASS XREC 2-56 .180		A	
121	2		EA		W2202560	-01	WASHER, FLAT	SST PASS.025THK .089ID .219OD		A	
122	2		EA		W2202561	-02	WASHER, LOCK, FLAT	NO. 2		A	
126	1		EA		W6502500	103	RES,FXD,COMPOSITION,1/4W,5%	10K		A	
					REF DES	(1)	R91,				
127	1		EA		W6501010	331	RESISTOR, FIXED, COMPOSITION	330 OHMS 5% 1W		A	
					REF DES	(1)	R94,				
130	1		EA		W0101653	-00	OPTION BD - MOD KIT			A	
134	1		EA		W4900169	-01	INTEGRATED CIRCUIT,DIGITAL	TTLS 74S74 * FF D SELECTED		I	
136	AR		IN		W5300333	-90	WIRE, ELEC	30SLD 300V PVD WHT		A	
*****	*******	***		*	**********	****	SEE TABULATION ON DRAWING	VAR DATA PART - 06 *********		A	
2	2		EA	I	5036516	-00	INTEGRATED CIRCUIT DIGITAL	TTLS 74S10 * GT NAND 3IN		A	

UNIVAC PARTS LIST

SPERRY UNIVAC IS A DIVISION OF SPERRY CORPORATION

MFG CODE	ISSUE DATE	CONTROL	DOC NO.		SHEET
J ,W	81/01/06	W 777	PL W4400619	8	31

TITLE: PC ASSEMBLY - OPTION BD DM357

PCC	ADC	PCD	COMM CODE	CA	U/M	ST	TYPE	SIZE	CLASS
					EA	A	M	C	A

FIND NO.	QUANTITY REQUIRED	U/M	PCC	PART OR IDENT NO. DOCUMENT NO.	DASH	EIR AND PART DESCRIPTION INFORMATION	ECC	ST	CHG
86	1	EA		W7100352	154	CAPACITOR, FIXED, TANT DIEL 35V 10% 150 PF		A	
				REF DES	(1)	C3,			
87	1	EA		W6901500	221	CAPACITOR, FIXED, MICA DIEL 500V 5% 220 PF		A	
				REF DES	(1)	C5,			
88	1	EA		W6901500	151	CAPACITOR, FIXED, MICA DIEL 500V 5% 150 PF		A	
				REF DES	(1)	C6,			
89	1	EA		W6901500	330	CAPACITOR, FIXED, MICA DIEL 500V 5% 33 PF		A	
				REF DES	(1)	C7,			
90	65	EA		6630012	-05	CAPACITOR, FIXED, CERAMIC DIEL .010 UF,50VDC,+80%,-20%		A	
				REF DES	(1)	C12,C15,C16,C19,C21, (2) C23,C25-C27,C29,C31,			
				REF DES	(3)	C32,C34-C36,C40,C43- (4) C45,C47,C49,C51,C53,			
				REF DES	(5)	C55,C57,C59,C63,C64, (6) C66,C67,C70,C71,C75,			
				REF DES	(7)	C76-C80,C83-C85,C87, (8) C91-C93,C95,C98,C101-			
				REF DES	(9)	C104,C106,C109-C111, (10) C113,C114,C116,C117,			
				REF DES	(11)	C119,C122,C124-C126, (12) C128,			
92	2	EA		W7701017	-00	SEMICONDUCTOR DEVICE, DIODE 200MA		A	
				REF DES	(1)	CR1,CR2,			
93	2	EA	D	2899056	-00	SEMICONDUCTOR DEVICE DIODE SILICON POWER 1N4003		A	
				REF DES	(1)	CR3,CR4,			
94	1	EA		W7600019	-00	TRANSISTOR PNP VCBO 150V 5.6MW BETA20		A	
				REF DES	(1)	Q1,			
96	5	EA		W4800007	-00	RESISTOR NETWORK, FIXED 28ELEMT1.5 W 2% 200AND 300		A	
100	5	EA	I	5036504	-00	INTEGRATED CIRCUIT DIGITAL TTLS 74S04 * GT HEX INVERT		A	
101	24	EA	I	3007755	-00	INTEGRATED CIRCUIT TTLH 74H04 * GT HEX INVERT		I	
102	2	EA	I	3006186	-00	INTEGRATED CIRCUIT TTL 7410 * GT NAND 3IN		I	

UNIVAC PARTS LIST

SPERRY UNIVAC IS A DIVISION OF SPERRY CORPORATION

MFG CODE	ISSUE DATE	CONTROL		DOC NO.	AC	SHEET
J ,W	81/01/06	W 777	PL	W4400619	8	33

TITLE	PCC	ADC	PCD	COMM CODE	CA	U/M	ST	TYPE	SIZE	CLASS
PC ASSEMBLY - OPTION BD DM357	.					EA	A	M	C	A

FIND NO.	QUANTITY REQUIRED		U/M	PCC	PART OR IDENT NO. DOCUMENT NO.	DASH	EIR AND PART DESCRIPTION INFORMATION	ECC	ST	CHG
3	1		EA	I	5036506	-00	INTEGRATED CIRCUIT TTLS 74S11 * GT AND 3IN		A	
4	1		EA	I	2892079	-00	INTEGRATED CIRCUIT DIGITAL TTLS 74S20 * GT NAND 4IN		A	
6	1		EA	I	2892081	-00	INTEGRATED CIRCUIT DIGITAL TTLS 74S64 * GT AOI		A	
8	3		EA	I	9004323	-01	INTEGRATED CIRCUIT DIGITAL TTL FF 2 JK ET BT	0	I	
25	6		EA	I	5036515	-00	INTEGRATED CIRCUIT TTLH 74H00 * GT NAND 2IN		I	
26	5		EA	I	2899571	-00	INTEGRATED CIRCUIT DIGITAL TTLS 74S00 * GT NAND 2IN		A	
34	2		EA	I	2899573	-00	INTEGRATED CIRCUIT DIGITAL TTLH 74H11 * GT AND 3IN		I	
37	1		EA	I	3013355	-00	INTEGRATED CIRCUIT-IC192 TTLH 74H21 * GT AND 4IN		I	
39	4		EA		W4900128	-01	INTEGRATED CIRCUIT, DIGITAL TTL 7438 QUAD 2IN NAND		I	
42	1		EA		W4900093	-01	INTEGRATED CIRCUIT, DIGITAL TTLH 74H50		A	
47	4		EA	I	5036157	-00	INTEGRATED CIRCUIT DIGITAL DUAL D TYPE EDGE TRIG, F-F		A	
51	1		EA	I	3007952	-00	INTEGRATED CIRCUIT TTL 74123 * MVB DUAL RGT		I	
58	4		EA	I	5036505	-00	INTEGRATED CIRCUIT TTLH 74H08 * GT AND 2IN		I	
59	1		EA	I	5036522	-00	INTEGRATED CIRCUIT DIGITAL TTL 3003 * GT OR 2IN		I	
64	3		EA		W6502500	121	RES,FXD,COMPOSITION,1/4W,5% 120 OHMS		A	
					REF DES	(1)	R19-R21,			
67	2		EA		W7100004	101	CAPACITOR, FIXED, CERAMIC DIEL 1.0 UF +80%, -20%		A	
					REF DES	(1)	C1,C2,			
69	2		EA		W6502500	471	RES,FXD,COMPOSITION,1/4W,5% 470 OHMS		A	
					REF DES	(1)	R22,R23,			
73	7		EA		W6502500	102	RES,FXD,COMPOSITION,1/4W,5% 1000 OHMS		A	
					REF DES	(1)	R24,R87,R88,R95,R96, (2) R100,R101,			
90	21		EA		6630012	-05	CAPACITOR, FIXED, CERAMIC DIEL .010 UF,50VDC,+80%,-20%		A	
					REF DES	(1)	C12,C19,C26,C27,C35, (2) C36,C40,C44,C45,C47,			
					REF DES	(3)	C49,C53,C59,C63,C64, (4) C70,C78,C83,C84,C95,			

UNIVAC PARTS LIST

SPERRY UNIVAC IS A DIVISION OF SPERRY CORPORATION

MFG CODE	ISSUE DATE	CONTROL		DOC NO.		SHEET
J ,W	81/01/06	W 777	PL	W4400619	8	34

TITLE: PC ASSEMBLY - OPTION BD DM357

PCC	ADC	PCD	COMM CODE	CA	U/M	ST	TYPE	SIZE	CLASS
					EA	A	M	C	A

FIND NO.	QUANTITY REQUIRED		U/M	PCC	PART OR IDENT NO. DOCUMENT NO.	DASH	EIR AND PART DESCRIPTION INFORMATION		ECC	ST	CHG
					REF DES	(5)	C109,				
96	1		EA		W4800007	-00	RESISTOR NETWORK, FIXED	28ELEMT1.5 W 2% 200AND 300		A	
100	2		EA	I	5036504	-00	INTEGRATED CIRCUIT DIGITAL	TTLS 74S04 * GT HEX INVERT		A	
101	7		EA	I	3007755	-00	INTEGRATED CIRCUIT	TTLH 74H04 * GT HEX INVERT		I	
103	3		EA	I	5036146	-00	INTEGRATED CIRCUIT DIGITAL	TTLS 74S74 * FF DUAL D		A	
104	1		EA	I	9004633	-01	INTEGRATED CIRCUIT DIGITAL	TTLS 74S112 * FF DUAL JK		A	
108	15		EA		W5800062	-09	CONTACT ELECTRICAL, WIRE WARP	PLATING, GOLD		A	
113	3		EA		W2600038	-00	CLIP, RETAINING	.006 THK, BERYLLIUM COPPER		A	
133	AR		IN		W5300701	-00	WIRE, ELEC	30SLD UL V TEFLON GRN		A	
*****	*******	***		*	**********	****	SEE TABULATION ON DRAWING	VAR DATA PART - 07 *********		A	
2	2		EA	I	5036516	-00	INTEGRATED CIRCUIT DIGITAL	TTLS 74S10 * GT NAND 3IN		A	
3	2		EA	I	5036506	-00	INTEGRATED CIRCUIT	TTLS 74S11 * GT AND 3IN		A	
4	1		EA	I	2892079	-00	INTEGRATED CIRCUIT DIGITAL	TTLS 74S20 * GT NAND 4IN		A	
6	1		EA	I	2892081	-00	INTEGRATED CIRCUIT DIGITAL	TTLS 74S64 * GT AOI		A	
8	4		EA	I	9004323	-01	INTEGRATED CIRCUIT DIGITAL	TTL FF 2 JK ET BT	0	I	
22	2		EA		W4900175	-00	INTEGRATED CIRCUIT, DIGITAL	TTL 82S62 9BT PARTY GEN		A	
25	6		EA	I	5036515	-00	INTEGRATED CIRCUIT	TTLH 74H00 * GT NAND 2IN		I	
26	6		EA	I	2899571	-00	INTEGRATED CIRCUIT DIGITAL	TTLS 74S00 * GT NAND 2IN		A	
30	3		EA		6558675	-00	INTEGRATED CIRCUIT			A	
34	2		EA	I	2899573	-00	INTEGRATED CIRCUIT DIGITAL	TTLH 74H11 * GT AND 3IN		I	
37	3		EA	I	3013355	-00	INTEGRATED CIRCUIT-IC192	TTLH 74H21 * GT AND 4IN		I	
39	12		EA		W4900128	-01	INTEGRATED CIRCUIT, DIGITAL	TTL 7438 QUAD 2IN NAND		I	
42	1		EA		W4900093	-01	INTEGRATED CIRCUIT, DIGITAL	TTLH 74H50		A	
47	5		EA	I	5036157	-00	INTEGRATED CIRCUIT DIGITAL	DUAL D TYPE EDGE TRIG, F-F		A	
51	1		EA	I	3007952	-00	INTEGRATED CIRCUIT	TTL 74123 * MVB DUAL RGT		I	

SPERRY UNIVAC PARTS LIST

SPERRY UNIVAC IS A DIVISION OF SPERRY CORPORATION

MFG CODE	ISSUE DATE	CONTROL		DOC NO.	AC	SHEET
J ,W	81/01/06	W 777	PL	W4400619	8	35

TITLE	PCC	ADC	PCD	COMM CODE	CA	U/M	ST	TYPE	SIZE	CLASS
PC ASSEMBLY - OPTION BD DM357						EA	A	M	C	A

FIND NO.	QUANTITY REQUIRED	U/M	PCC	PART OR IDENT NO. DOCUMENT NO.	DASH	EIR AND PART DESCRIPTION INFORMATION	ECC	ST	CHG
58	5	EA	I	5036505	-00	INTEGRATED CIRCUIT TTLH 74H08 * GT AND 2IN		I	
59	1	EA	I	5036522	-00	INTEGRATED CIRCUIT DIGITAL TTL 3003 * GT OR 2IN		I	
61	1	EA		W8001000	-04	DELAY LINE 30.00NSEC TD 3TERM 390 OHM		A	
				REF DES	(1)	DL1			
63	14	EA		W6502500	362	RES,FXD,COMPOSITION,1/4W,5% 3600 OHMS		A	
				REF DES	(1)	R1-R12,R17,R18,			
64	3	EA		W6502500	121	RES,FXD,COMPOSITION,1/4W,5% 120 OHMS		A	
				REF DES	(1)	R19-R21,			
67	2	EA		W7100004	101	CAPACITOR, FIXED, CERAMIC DIEL 1.0 UF +80%, -20%		A	
				REF DES	(1)	C1,C2,			
69	5	EA		W6502500	471	RES,FXD,COMPOSITION,1/4W,5% 470 OHMS		A	
				REF DES	(1)	R22,R23,R29,R57,R58,			
73	8	EA		W6502500	102	RES,FXD,COMPOSITION,1/4W,5% 1000 OHMS		A	
				REF DES	(1)	R24,R60,R61,R87,R95, (2) R96,R100,R101,			
84	1	EA		W6502500	391	RES,FXD,COMPOSITION,1/4W,5% 390 OHMS		A	
				REF DES	(1)	R59,			
90	30	EA		6630012	-05	CAPACITOR, FIXED, CERAMIC DIEL .010 UF,50VDC,+80%,-20%		A	
				REF DES	(1)	C12,C19,C26,C27,C35, (2) C36,C40,C43-C45,C47,			
				REF DES	(3)	C49,C51,C53,C59,C63, (4) C64,C70,C75-C80,C83,			
				REF DES	(5)	C84,C87,C95,C103, (6) C109,			
96	1	EA		W4800007	-00	RESISTOR NETWORK, FIXED 28ELEMT1.5 W 2% 200AND 300		A	
100	4	EA	I	5036504	-00	INTEGRATED CIRCUIT DIGITAL TTLS 74S04 * GT HEX INVERT		A	
101	12	EA	I	3007755	-00	INTEGRATED CIRCUIT TTLH 74H04 * GT HEX INVERT		I	
103	3	EA	I	5036146	-00	INTEGRATED CIRCUIT DIGITAL TTLS 74S74 * FF DUAL D		A	
104	1	EA	I	9004633	-01	INTEGRATED CIRCUIT DIGITAL TTLS 74S112 * FF DUAL JK		A	

SPERRY UNIVAC PARTS LIST

SPERRY UNIVAC IS A DIVISION OF SPERRY CORPORATION

MFG CODE	ISSUE DATE	CONTROL		DOC NO.		SHEET
J ,W	81/01/06	W 777.	PL	W4400619	8	36

TITLE	PCC	ADC	PCD	COMM CODE	CA	U/M	ST	TYPE	SIZE	CLASS
PC ASSEMBLY - OPTION BD DM357						EA	A	M	C	A

FIND NO.	QUANTITY REQUIRED	U/M	PCC	PART OR IDENT NO. DOCUMENT NO.	DASH	EIR AND PART DESCRIPTION INFORMATION	ECC	ST	CHG
108	117	EA		W5800062	-09	CONTACT ELECTRICAL, WIRE WARP PLATING, GOLD		A	
113	31	EA		W2600038	-00	CLIP, RETAINING .006 THK, BERYLLIUM COPPER		A	
133	AR	IN		W5300701	-00	WIRE, ELEC 30SLD UL V TEFLON GRN		A	
136	AR	IN		W5300333	-90	WIRE, ELEC 30SLD 300V PVD WHT		A	
*****	******* ***		*	**********	****	SEE TABULATION ON DRAWING VAR DATA PART - 08 *********		A	
2	2	EA	I	5036516	-00	INTEGRATED CIRCUIT DIGITAL TTLS 74S10 * GT NAND 3IN		A	
3	3	EA	I	5036506	-00	INTEGRATED CIRCUIT TTLS 74S11 * GT AND 3IN		A	
4	1	EA	I	2892079	-00	INTEGRATED CIRCUIT DIGITAL TTLS 74S20 * GT NAND 4IN		A	
6	1	EA	I	2892081	-00	INTEGRATED CIRCUIT DIGITAL TTLS 74S64 * GT AOI		A	
8	6	EA	I	9004323	-01	INTEGRATED CIRCUIT DIGITAL TTL FF 2 JK ET BT	0	I	
14	2	EA		W4800005	-00	OPOELECTRONIC COUPLER PLASTIC		A	
15	1	EA		W4900348	-00	INTEGRATED CIRCUIT, DIGITAL CMOS 6402 UART		A	
16	1	EA		W4900182	-00	INTEGRATED CIRCUIT, DIGITAL TTLS 74S113 FF DUAL JK ET		A	
17	1	EA	I	3008182	-00	INTEGRATED CIRCUIT TTL 7402 * GT NOR 2IN		I	
22	2	EA		W4900175	-00	INTEGRATED CIRCUIT, DIGITAL TTL 82S62 9BT PARTY GEN		A	
23	1	EA	I	9001407	-01	INTEGRATED CIRCUIT DIGITAL TTL DEC BIN 1 OF 8 BT	0	I	
25	10	EA	I	5036515	-00	INTEGRATED CIRCUIT TTLH 74H00 * GT NAND 2IN		I	
26	6	EA	I	2899571	-00	INTEGRATED CIRCUIT DIGITAL TTLS 74S00 * GT NAND 2IN		A	
27	6	EA	I	3013354	-00	INTEGRATED CIRCUIT TTLH 74H01 * GT NAND 2IN		I	
28	1	EA	I	2899412	-00	INTEGRATED CIRCUIT LINEAR TTL 7403 * GT NAND 2IN		A	
30	4	EA		6558675	-00	INTEGRATED CIRCUIT		A	
34	8	EA	I	2899573	-00	INTEGRATED CIRCUIT DIGITAL TTLH 74H11 * GT AND 3IN		I	
35	1	EA	I	3008089	-00	INTEGRATED CIRCUIT TTL 7413 * GT NAND 4IN		I	
36	1	EA	I	3008187	-00	INTEGRATED CIRCUIT TTL 7420 * GT NAND 4IN		I	
37	6	EA	I	3013355	-00	INTEGRATED CIRCUIT-IC192 TTLH 74H21 * GT AND 4IN		I	

UNIVAC PARTS LIST

SPERRY UNIVAC IS A DIVISION OF SPERRY CORPORATION

MFG CODE	ISSUE DATE	CONTROL		DOC NO.	AC	SHEET
J ,W	81/01/06	W 777	PL	W4400619	8	37

TITLE: PC ASSEMBLY - OPTION 8D DM357

PCC	ADC	PCD	COMM CODE	CA	U/M	ST	TYPE	SIZE	CLASS
					EA	A	M	C	A

FIND NO.	QUANTITY REQUIRED	U/M	PCC	PART OR IDENT NO. DOCUMENT NO.	DASH	EIR AND PART DESCRIPTION INFORMATION	ECC	ST	CHG
38	1	EA		3013468	-00	INTEGRATED CIRCUIT - IC204 TTLH 74H30 * GT NAND 8IN		I	
39	15	EA		W4900128	-01	INTEGRATED CIRCUIT, DIGITAL TTL 7438 QUAD 2IN NAND		I	
42	3	EA		W4900093	-01	INTEGRATED CIRCUIT, DIGITAL TTLH 74H50		A	
46	10	EA	I	3008194	-00	INTEGRATED CIRCUIT TTL 7474 * FF D DUAL		I	
47	7	EA	I	5036157	-00	INTEGRATED CIRCUIT DIGITAL DUAL D TYPE EDGE TRIG, F-F		A	
48	2	EA	I	3008195	-00	INTEGRATED CIRCUIT TTL 7475 * REG LATCH 4BT		I	
49	4	EA	I	3006204	-00	INTEGRATED CIRCUIT - IC7 TTL 7493 * CNTR 4BT		I	
50	3	EA	I	9004321	-01	INTEGRATED CIRCUIT DIGITAL TTL FF 2 JK ET BT	0	I	
51	2	EA	I	3007952	-00	INTEGRATED CIRCUIT TTL 74123 * MVB DUAL RGT		I	
54	3	EA	I	3007845	-00	INTEGRATED CIRCUIT TTL 74193 * CNTR 4BT U/D		I	
55	6	EA		2510193	-00	INTEGRATED CIRCUIT,DIGITAL		I	
56	2	EA	I	3008031	-00	INTEGRATED CIRCUIT TTL 74122 * MVB RGT W/C		I	
57	3	EA		W4900010	-00	INTEGRATED CIRCUIT, DIGITAL DTL 844 * GT 2IN NAND		A	
58	12	EA	I	5036505	-00	INTEGRATED CIRCUIT TTLH 74H08 * GT AND 2IN		I	
59	2	EA	I	5036522	-00	INTEGRATED CIRCUIT DIGITAL TTL 3003 * GT OR 2IN		I	
61	1	EA		W8001000	-04	DELAY LINE 30.00NSEC TD 3TERM 390 OHM		A	
				REF DES	(1)	DL1,			
63	18	EA		W6502500	362	RES,FXD,COMPOSITION,1/4W,5% 3600 OHMS		A	
				REF DES	(1)	R1-R18,			
64	4	EA		W6502500	121	RES,FXD,COMPOSITION,1/4W,5% 120 OHMS		A	
				REF DES	(1)	R19-R21,R86,			
67	4	EA		W7100004	101	CAPACITOR, FIXED, CERAMIC DIEL 1.0 UF +80%, -20%		A	
				REF DES	(1)	C1,C2,C8,C9,			
68	2	EA		W6502500	123	RES,FXD,COMPOSITION,1/4W,5% 12K		A	
				REF DES	(1)	R31,R56,			

UNIVAC PARTS LIST

SPERRY UNIVAC IS A DIVISION OF SPERRY CORPORATION

MFG CODE	ISSUE DATE	CONTROL		DOC NO.		SHEET
J ,W	81/01/06	W 777	PL	W4400619	8	38

TITLE: PC ASSEMBLY - OPTION BD DM357

PCC	ADC	PCD	COMM CODE	CA	U/M	ST	TYPE	SIZE	CLASS
					EA	A	M	C	A

FIND NO.	QUANTITY REQUIRED	U/M	PCC	PART OR IDENT NO. DOCUMENT NO.	DASH	EIR AND PART DESCRIPTION INFORMATION	ECC	ST	CHG
69	11	EA		W6502500	471	RES,FXD,COMPOSITION,1/4W,5% 470 OHMS		A	
				REF DES	(1)	R22,R23,R34,R27-R30, (2) R39,R57,R58,R62,			
72	1	EA		W6502500	182	RES,FXD,COMPOSITION,1/4W,5% 1800 OHMS		A	
				REF DES	(1)	R37,			
73	21	EA		W6502500	102	RES,FXD,COMPOSITION,1/4W,5% 1000 OHMS		A	
				REF DES	(1)	R24,R33,R35,R36,R38, (2) R41,R43,R45,R47,R48,			
				REF DES	(3)	R60,R61,R83,R87,R89, (4) R90,R95,R96,R99-R101,			
74	1	EA		W6502500	303	RES,FXD,COMPOSITION,1/4W,5% 30K		A	
				REF DES	(1)	R42,			
75	1	EA		W6502500	223	RES,FXD,COMPOSITION,1/4W,5% 22K		A	
				REF DES	(1)	R44,			
76	1	EA		W6502500	203	RES,FXD,COMPOSITION,1/4W,5% 20K		A	
				REF DES	(1)	R46,			
77	2	EA		W6502500	151	RES,FXD,COMPOSITION,1/4W,5% 150 OHMS		A	
				REF DES	(1)	R32,R49,			
78	1	EA		W6502500	513	RES,FXD,COMPOSITION,1/4W,5% 51K		A	
				REF DES	(1)	R50,			
79	1	EA		W6502500	512	RES,FXD,COMPOSITION,1/4W,5% 5100 OHMS		A	
				REF DES	(1)	R92,			
80	2	EA		W6502010	202	RESISTOR, FIXED, COMPOSITION 2 K 5% 2W		A	
				REF DES	(1)	R51,R55,			
81	1	EA		W6501010	471	RESISTOR, FIXED, COMPOSITION 470 OHMS 5% 1W		A	
				REF DES	(1)	R53,			
82	1	EA		W6501010	101	RESISTOR, FIXED, COMPOSITION 100 OHMS 5% 1W		A	
				REF DES	(1)	R52,			

UNIVAC PARTS LIST
SPERRY UNIVAC IS A DIVISION OF SPERRY CORPORATION

MFG CODE	ISSUE DATE	CONTROL		DOC NO.	AC	SHEET
J ,W	81/01/06	W 777	PL	W4400619	8	39

TITLE	PCC	ADC	PCD	COMM CODE	CA	U/M	ST	TYPE	SIZE	CLASS
PC ASSEMBLY - OPTION 8D DM357						EA	A	M	C	A

FIND NO.	QUANTITY REQUIRED	U/M	PCC	PART OR IDENT NO. DOCUMENT NO.	DASH	EIR AND PART DESCRIPTION INFORMATION	ECC	ST	CHG
84	1	EA		W6502500	391	RES,FXD,COMPOSITION,1/4W,5% 390 OHMS		A	
				REF DES	(1)	R59,			
85	1	EA	C	4916657	-06	CAP FXD CER DIEL 50V +80 - 20% 100K PF		A	
				REF DES	(1)	C4,			
86	1	EA		W7100352	154	CAPACITOR, FIXED, TANT DIEL 35V 10% 150 PF		A	
				REF DES	(1)	C3,			
87	1	EA		W6901500	221	CAPACITOR, FIXED, MICA DIEL 500V 5% 220 PF		A	
				REF DES	(1)	C5,			
88	1	EA		W6901500	151	CAPACITOR, FIXED, MICA DIEL 500V 5% 150 PF		A	
				REF DES	(1)	C6,			
89	1	EA		W6901500	330	CAPACITOR, FIXED, MICA DIEL 500V 5% 33 PF		A	
				REF DES	(1)	C7,			
90	49	EA		6630012	-05	CAPACITOR, FIXED, CERAMIC DIEL .010 UF,50VDC,+80%,-20%		A	
				REF DES	(1)	C12,C15,C19,C21,C26, (2) C27,C29,C31,C35,C36,			
				REF DES	(3)	C40,C43-C45,C47,C49, (4) C51,C53,C55,C59,C63,			
				REF DES	(5)	C64,C70,C75-C80,C83, (6) C84,C87,C93,C95,C102,			
				REF DES	(7)	C103,C106,C109,C111, (8) C113,C114,C116,C117,			
				REF DES	(9)	C119,C122,C124-C126, (10) C128,			
92	2	EA		W7701017	-00	SEMICONDUCTOR DEVICE, DIODE 200MA		A	
				REF DES	(1)	CR1,CR2,			
93	2	EA	D	2899056	-00	SEMICONDUCTOR DEVICE DIODE SILICON POWER 1N4003		A	
				REF DES	(1)	CR3,CR4,			
94	1	EA		W7600019	-00	TRANSISTOR PNP VCBO 150V 5.6MW BETA20		A	
				REF DES	(1)	Q1,			
96	1	EA		W4800007	-00	RESISTOR NETWORK, FIXED 28ELEMT1.5 W 2% 200AND 300		A	

UNIVAC PARTS LIST

SPERRY UNIVAC IS A DIVISION OF SPERRY CORPORATION

MFG CODE	ISSUE DATE	CONTROL		DOC NO.		SHEET
J ,W	81/01/06	W 777	PL	W4400619	8	40

TITLE	PCC	ADC	PCD	COMM CODE	CA	U/M	ST	TYPE	SIZE	CLASS
PC ASSEMBLY - OPTION 8D DM357						EA	A	M	C	A

FIND NO.	QUANTITY REQUIRED	U/M	PCC	PART OR IDENT NO. DOCUMENT NO.	DASH	EIR AND PART DESCRIPTION INFORMATION		ECC	ST	CHG
100	4	EA	I	5036504	-00	INTEGRATED CIRCUIT DIGITAL	TTLS 74S04 * GT HEX INVERT		A	
101	19	EA	I	3007755	-00	INTEGRATED CIRCUIT	TTLH 74H04 * GT HEX INVERT		I	
102	1	EA	I	3008186	-00	INTEGRATED CIRCUIT	TTL 7410 * GT NAND 3IN		I	
103	3	EA	I	5036146	-00	INTEGRATED CIRCUIT DIGITAL	TTLS 74S74 * FF DUAL D		A	
104	1	EA	J	9004633	-01	INTEGRATED CIRCUIT DIGITAL	TTLS 74S112 * FF DUAL JK		A	
108	229	EA		W5800062	-09	CONTACT ELECTRICAL, WIRE WARP	PLATING, GOLD		A	
110	1	EA		W5700296	-00	CONNECTOR, RECTANGULAR, ELEC	9 FIXED SOCKETS RECP		A	
				REF DES	(1)	J8,				
113	45	EA		W2600038	-00	CLIP, RETAINING	.006 THK, BERYLLIUM COPPER		A	
114	1	EA		W7800108	-00	SWITCH, TOGGLE, LEVER	2 POSITION		A	
				REF DES	(1)	S1,				
115	1	EA		W5800189	-00	CONNECTOR, COAXIAL, ELECTRICAL	1000 VOLTS, 50 OHMS		A	
				REF DES	(1)	TP1,				
116	2	EA		W5700296	-02	CONNECTOR, RECTANGULAR, ELEC	BRACKET		A	
119	AR	IN		W5400001	124	INSULATION SLEEVING, ELEC	SIZE 24 BLACK .022 ID		A	
120	2	EA		W2100062	-01	SCREW, MACH, PAN HEAD	STL PASS XREC 2-56 .180		A	
121	2	EA		W2202560	-01	WASHER, FLAT	SST PASS.025THK .089ID .219OD		A	
122	2	EA		W2202561	-02	WASHER, LOCK, FLAT	NO. 2		A	
126	1	EA		W6502500	103	RES,FXD,COMPOSITION,1/4W,5%	10K		A	
				REF DES	(1)	R91,				
127	1	EA		W6501010	331	RESISTOR, FIXED, COMPOSITION	330 OHMS 5% 1W		A	
				REF DES	(1)	R94,				
133	AR	IN		W5300701	-00	WIRE, ELEC	30SLD UL V TEFLON GRN		A	
134	1	EA		W4900169	-01	INTEGRATED CIRCUIT,DIGITAL	TTLS 74S74 * FF D SELECTED		I	
135	1	EA		W8600053	-02	LABEL, IDENTIFICATION	TTY CRT 700 RED LTR WHT BKGD		A	

SPERRY UNIVAC PARTS LIST

SPERRY UNIVAC IS A DIVISION OF SPERRY CORPORATION

MFG CODE	ISSUE DATE	CONTROL		DOC NO.	AC	SHEET
J ,W	81/01/06	W 777	PL	W4400619	8	41

TITLE	PCC	ADC	PCD	COMM CODE	CA	U/M	ST	TYPE	SIZE	CLASS
PC ASSEMBLY - OPTION BD DM357						EA	A	M	C	A

FIND NO.	QUANTITY REQUIRED	U/M	PCC	PART OR IDENT NO. DOCUMENT NO.	PART OR IDENT NO. DASH	EIR AND PART DESCRIPTION INFORMATION	ECC	ST	CHG
136	AR	IN		W5300333	-90	WIRE, ELEC 30SLD 300V PVD WHT		A	

WIRE LIST

IDENTIFICATION NO.	IDENTIFICATION SIGNAL	TERMINATION FROM	TERMINATION F/N	TERMINATION TO	TERMINATION F/N	WIRE COLOR	WIRE AWG	WIRE F/N
1	JUMPER	E91	108	E52	108	WHT	30	136
2		E92		E53				
3		E95		E110				
4		E54		E109				
5		E110	108	E109	108			136
6		A7-4	S.C.	A7-7	S.C.			133
7		S5-6		S5-7				
8		S5-7		S5-8				
9		T5-7		T5-8				
10		Z4-7		Z4-8				
11	JUMPER	F6-7	S.C.	F6-11	S.C.	WHT	30	133
12	JUMPER	E-13	108	E-18	108	WHT	30	136
13	JUMPER	A-24	108	B51	108	WHT	30	136

△6 △6 △7 △7 △9 △9

REVISIONS

REV	EN/EIR	CHG CODE	DESCRIPTION	DR	APPD
AY	85481	1	REVISED AND REDRAWN	MT	
AZ	85659	2	REVISED LOC. OF JUMPER CLIPS _ ADDED W/L	MT	
BA	85694	2	REVISED	MT	
BB	87224		SHT 1. ADDED NOTE 9. ADDED TO W/L NO'S 12 & 13. REV TAB. BLOCK SHT 3 F/N 108 WAS 245 PLC'S SHT 3 & 4 REV LOC OF JUMPER CLIPS.	RM	8-3-72
BC	87799-05	C	ADDED SWITCH TO LOCATION T9 ON SH'S 2.0 THRU 8.0	TN	
BC	W87957-02		RELEASED TO API	TN	
DH	W94235-01		REVISED SOCKET AT ZN A-2 ON SH'S 2.0 THRU 5.0 & 8.0 UPDATED FORMAT, DOCUMENT NO. WAS: 44C0619	TN	

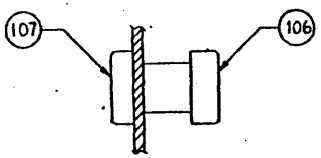

SECTION A-A

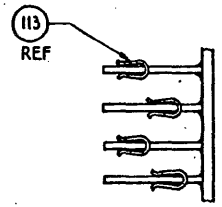

DETAIL B

TYPICAL JUMPER CLIP CONFIGURATION

10. "FIND" NUMBERS FOR PARTS, IDENTIFIED BY REFERENCE DESIGNATIONS, APPEAR IN PART LIST

△9 FOR W4400619 -00 THRU -05 & -08

8. S.C. = SOLDER CONNECTION

△7 FOR W4400619- 07 ONLY

△6 FOR W4400619- 00 THRU - 05, - 07 & - 08

△5 FOR W4400619- 04 AND - 05 MODIFY W4400619-01 AND - 02 PER OPTION BOARD MOD KIT W0101653) F/N 130.

△4 HARDWARE SUPPLIED WITH F/N 110

3. DASH NO. IN I.C.'S INDICATE FIND NO. IN PARTS LIST.

2. INSTALL HARDWARE IN ACCORDANCE WITH (502)

△1 IDENTIFY PER (301)

NOTE: UNLESS OTHERWISE SPECIFIED

TABULATION BLOCK

PART NO.	REMARKS (OPTIONS INCLUDED)
W4400619- 00	COMMON LOGIC, I/O, RTC, TTY/CRT, PFR
W4400619- 01	COMMON LOGIC, I/O, RTC, TTY/CRT, PFR, MEM PARITY, MEM PROTECT
W4400619- 02	COMMON LOGIC, I/O, RTC, TTY/CRT, PFR, MEM PARITY, MEM PROTECT, PMA
W4400619- 03	COMMON LOGIC, I/O, RTC, TTY/CRT, PFR, MEM PARITY, PMA
△5 W4400619- 04	COMMON LOGIC, I/O, RTC, CRT, PFR, MEM PARITY, MEM PROTECT
△5 W4400619- 05	COMMON LOGIC, I/O, RTC, CRT, PFR, MEM PARITY, MEM PROTECT, PMA
W4400619- 06	I/O ONLY
W4400619- 07	COMMON LOGIC, I/O, MEM PARITY
W4400619- 08	COMMON LOGIC, I/O, RTC, TTY/CRT, PFR, MEM PARITY

W4400619 DH

REFERENCE DRAWINGS	
W4000528	P.W. BOARD
W9100401	LOGIC DIAGRAM
W9700759	ARTWORK
W9700760	SILKSCREEN
W9700764	SOLDER MASK

PART NUMBER , SEE TABULATION

FOR MATL REQUIREMENTS SEE PL
PL REV LETTER CONTROLS DOCUMENT.

MODEL NO. V73
NEXT ASSY W0101332
MATERIAL
FINISH

DIMENSIONS ARE IN INCHES AND AFTER FINISHING
TOLERANCES (UNLESS OTHERWISE SPECIFIED)
X ± .1
XX ± .03
XXX ± .010
ANGLES ± 0.5°
BREAK ALL SHARP EDGES .010 R APPROX
DO NOT SCALE DRAWING

DR	W.Q.	7.25.72
CHK	B.B.	7.26.72
DSGN	W.Q.	7.25.72
ENGR	A.WHITCOMB	8.2.72
APPD	A.WHITCOMB	8.2.72
APPD		

THIS DOCUMENT MAY CONTAIN PROPRIETARY INFORMATION AND SUCH INFORMATION MAY NOT BE DISCLOSED TO OTHERS FOR ANY PURPOSE OR USED TO PRODUCE THE ARTICLE OR SUBJECT, WITHOUT WRITTEN PERMISSION

SPERRY UNIVAC

TITLE
PC ASSEMBLY OPTION BD DM 357

CODE IDENT NO.	SIZE	DWG NO	REV
21101	C	W4400619	DH

SCALE —— SHEET 1 OF 8

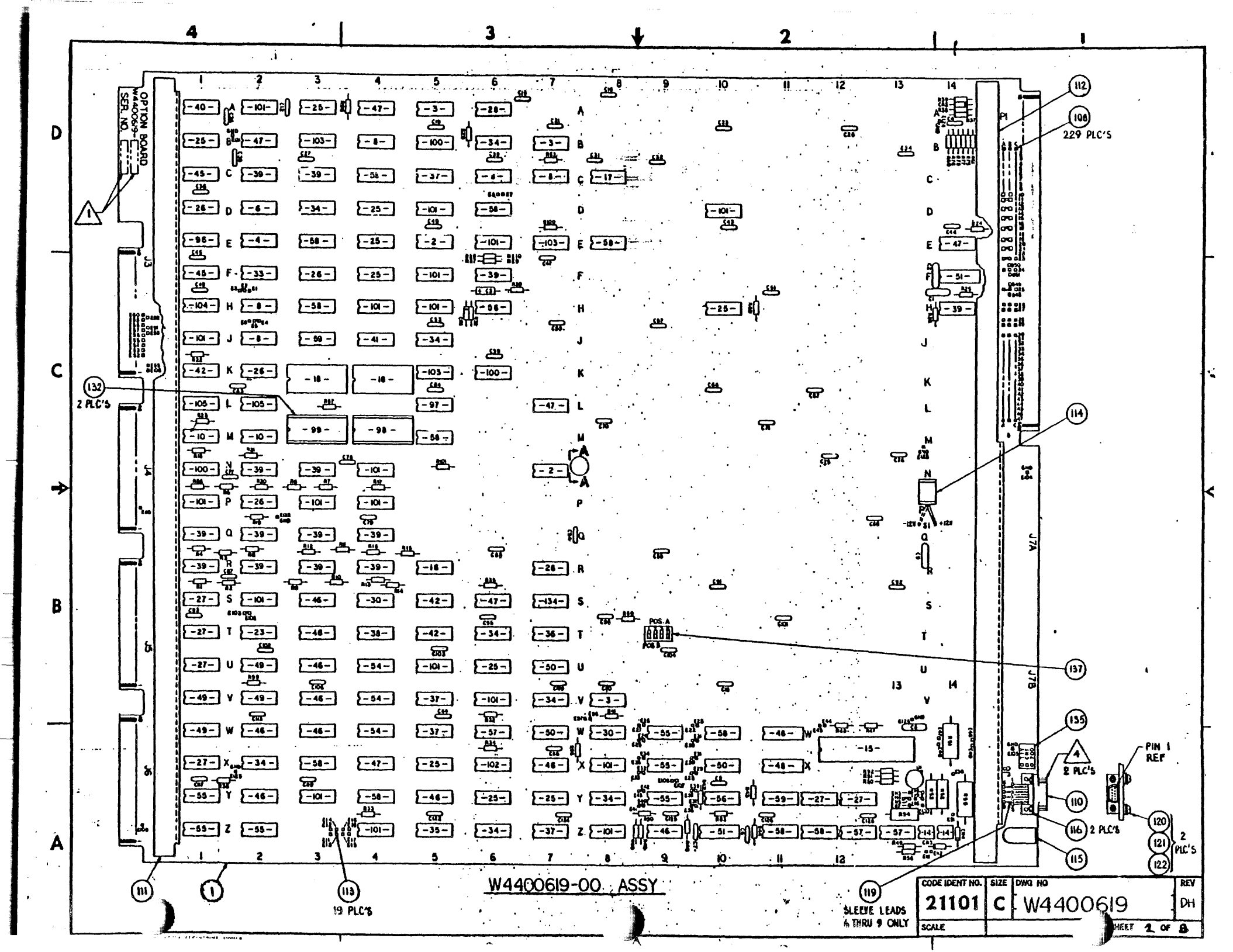

W4400619-00 ASSY

CODE IDENT NO.	SIZE	DWG NO	REV
21101	C	W4400619	DH
SCALE		SHEET 1 OF 8	

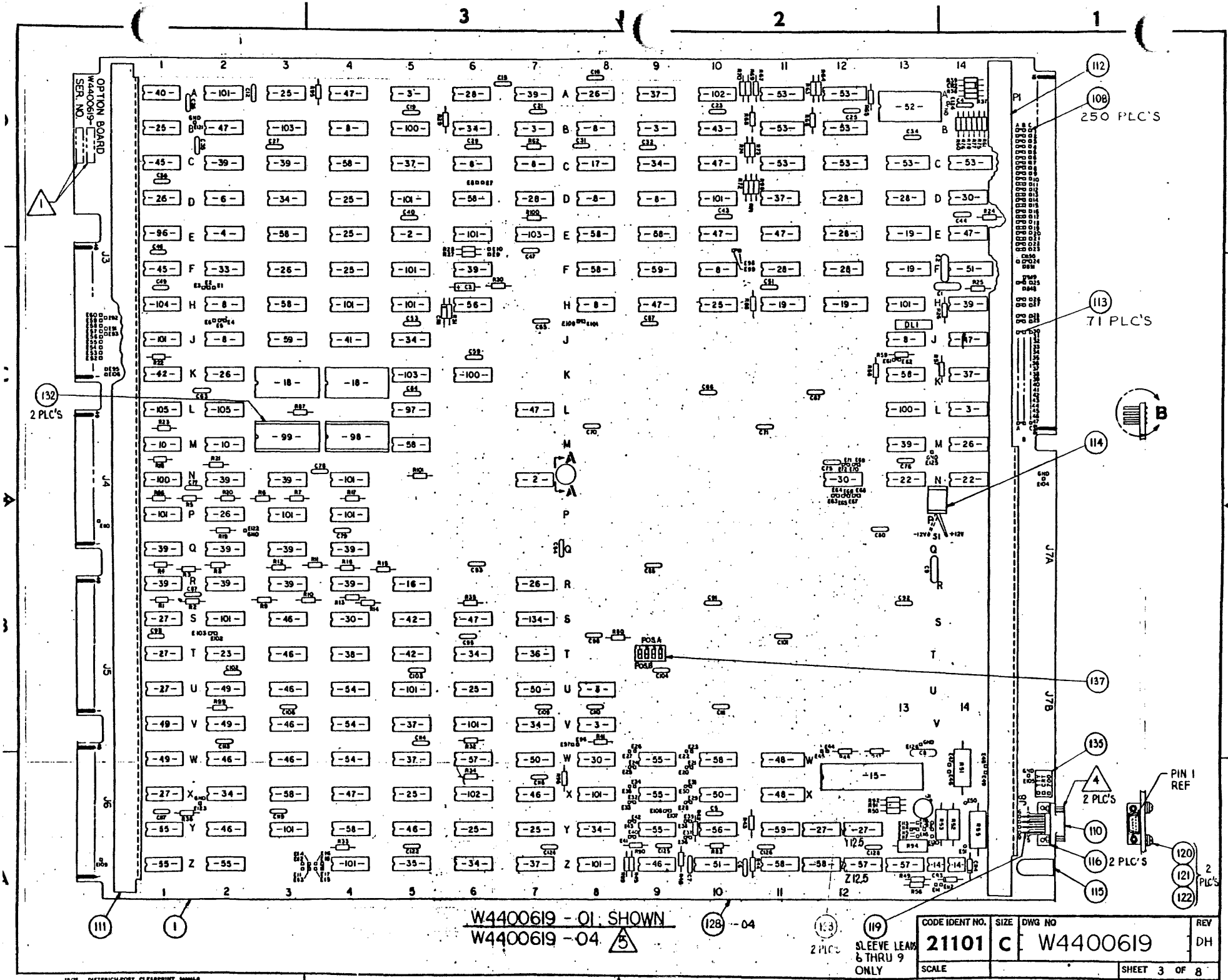
OPTION BOARD
W4400619-
SER. NO.
250 PLC'S
71 PLC'S
2 PLC'S
PIN 1
REF
W4400619 - 01 SHOWN
W4400619 - 04
SLEEVE LEAD
6 THRU 9
ONLY
CODE IDENT NO. 21101
SIZE C
DWG NO W4400619
REV DH
SCALE
SHEET 3 OF 8

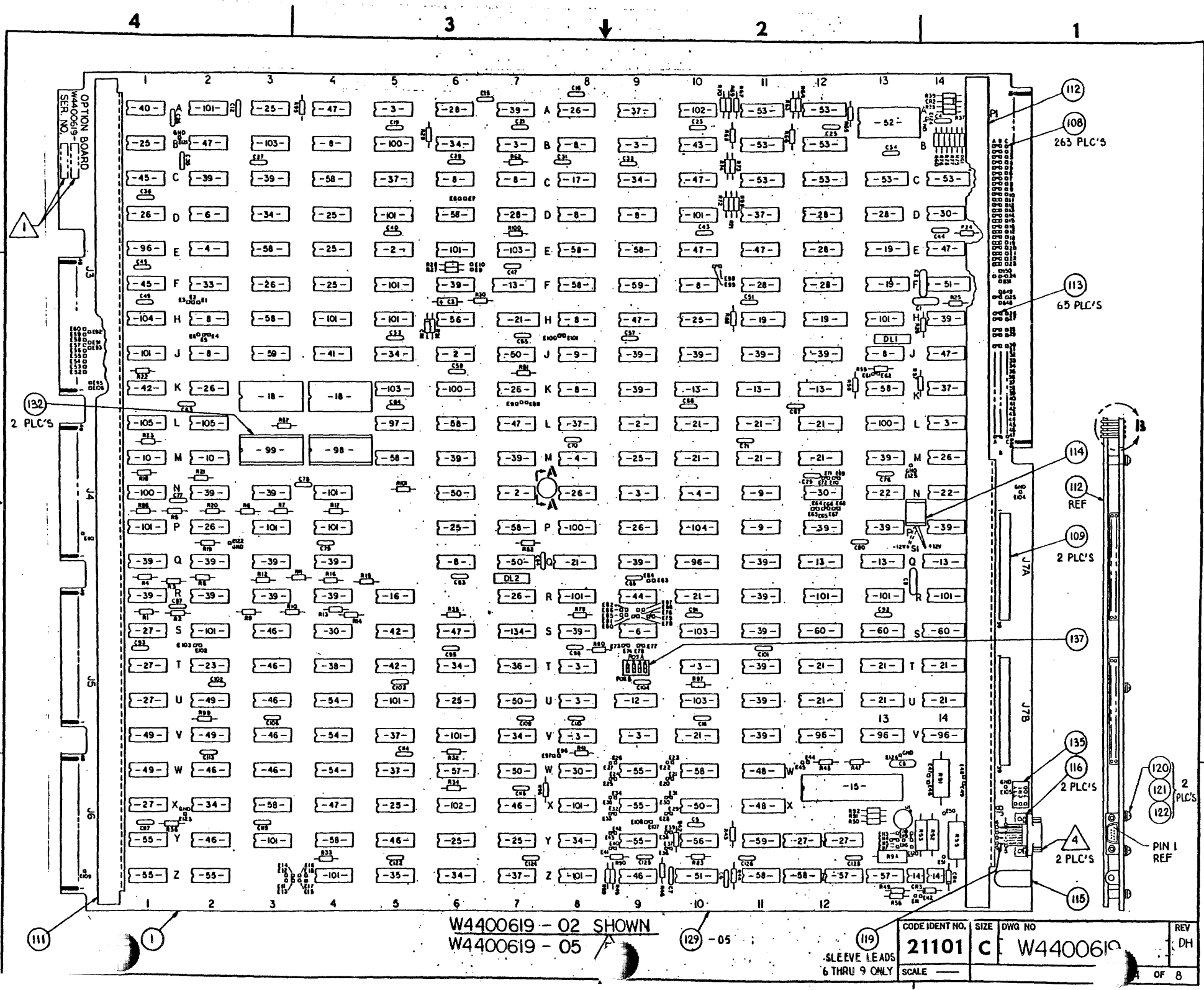

CODE IDENT NO.	SIZE	DWG NO	REV
21101	C	W4400619	DH
SCALE —			OF 8

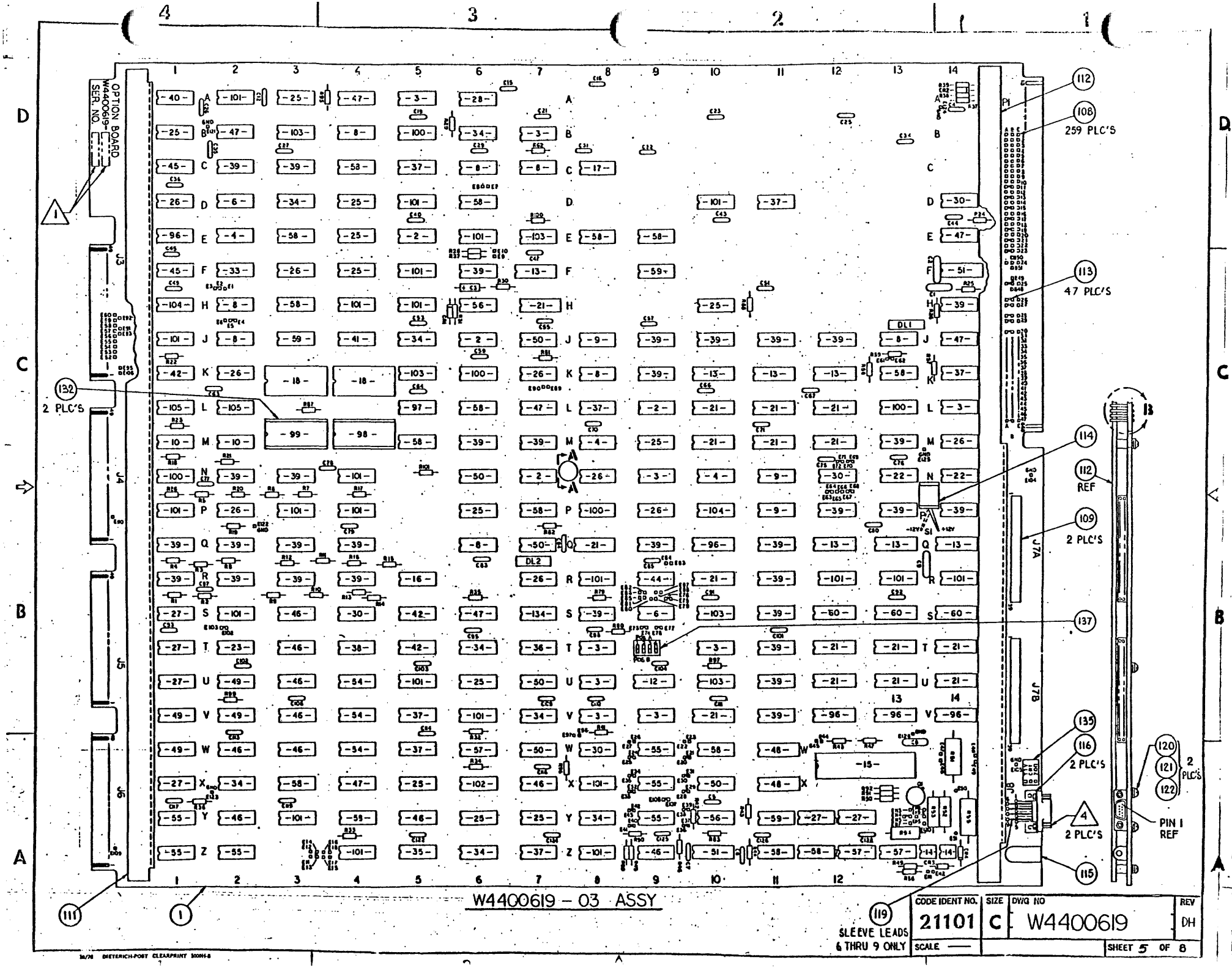

CODE IDENT NO.	SIZE	DWG NO	REV
21101	C	W4400619	DH
SCALE ——			SHEET 5 OF 8

DIETERICH-POST CLEARPRINT

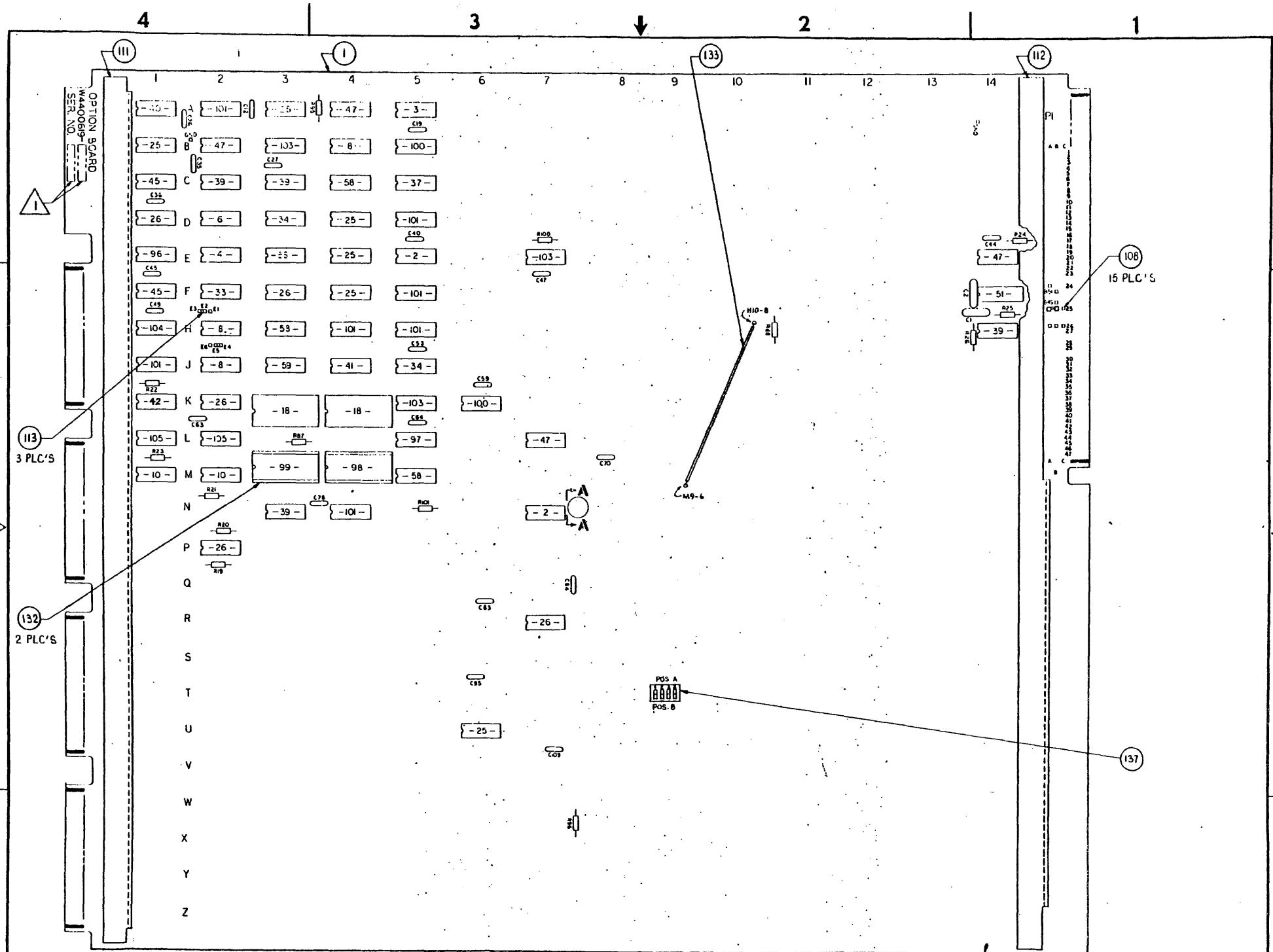

W4400619 – 06 ASSY

CODE IDENT NO.	SIZE	DWG NO	REV
21101	C	W4400619	DH
SCALE —			SHT 6 OF 8

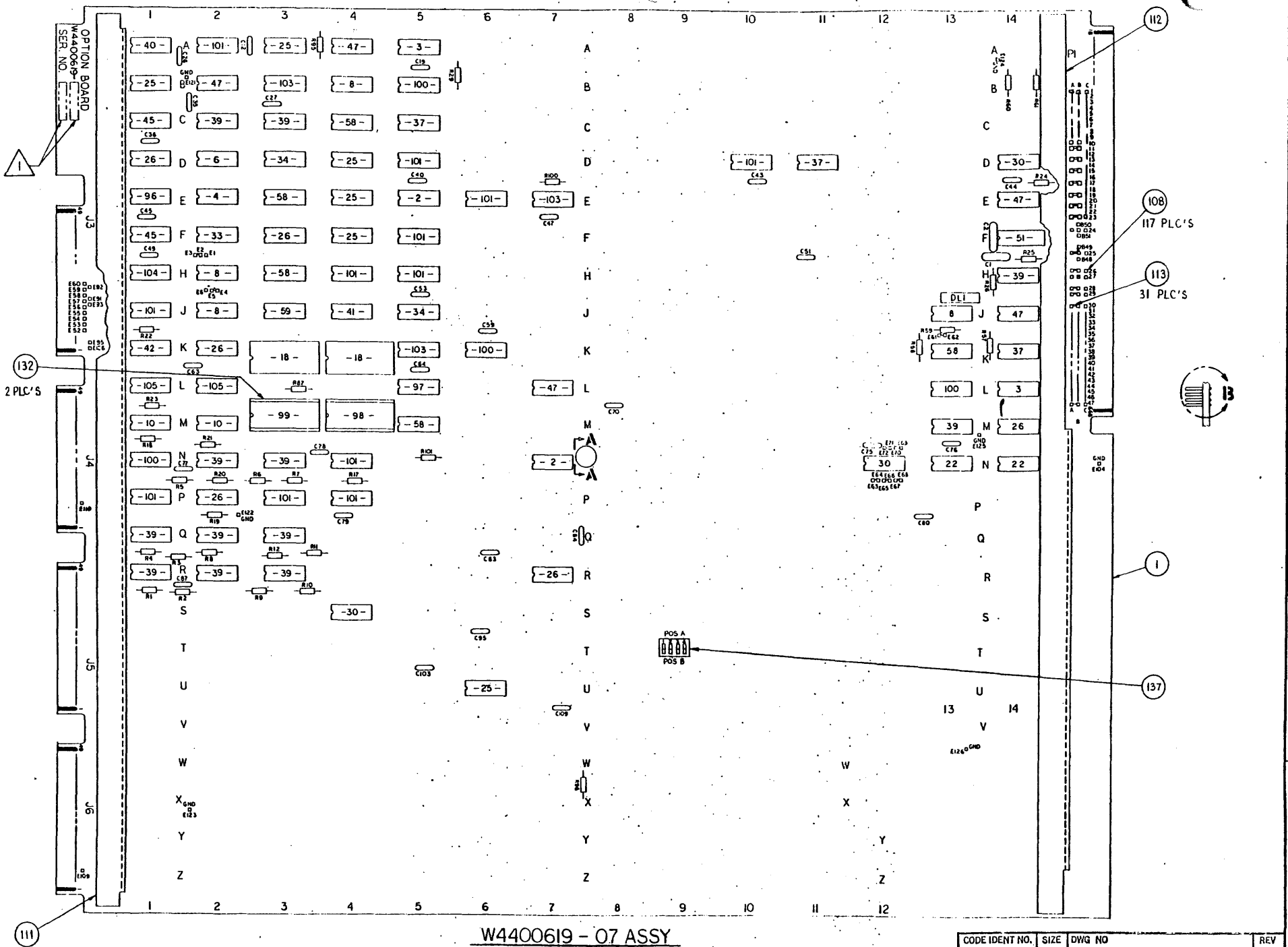

W4400619 - 07 ASSY

CODE IDENT NO.	SIZE	DWG NO	REV
21101	C	W4400619	DH
SCALE —		SHEET 7 OF 8	

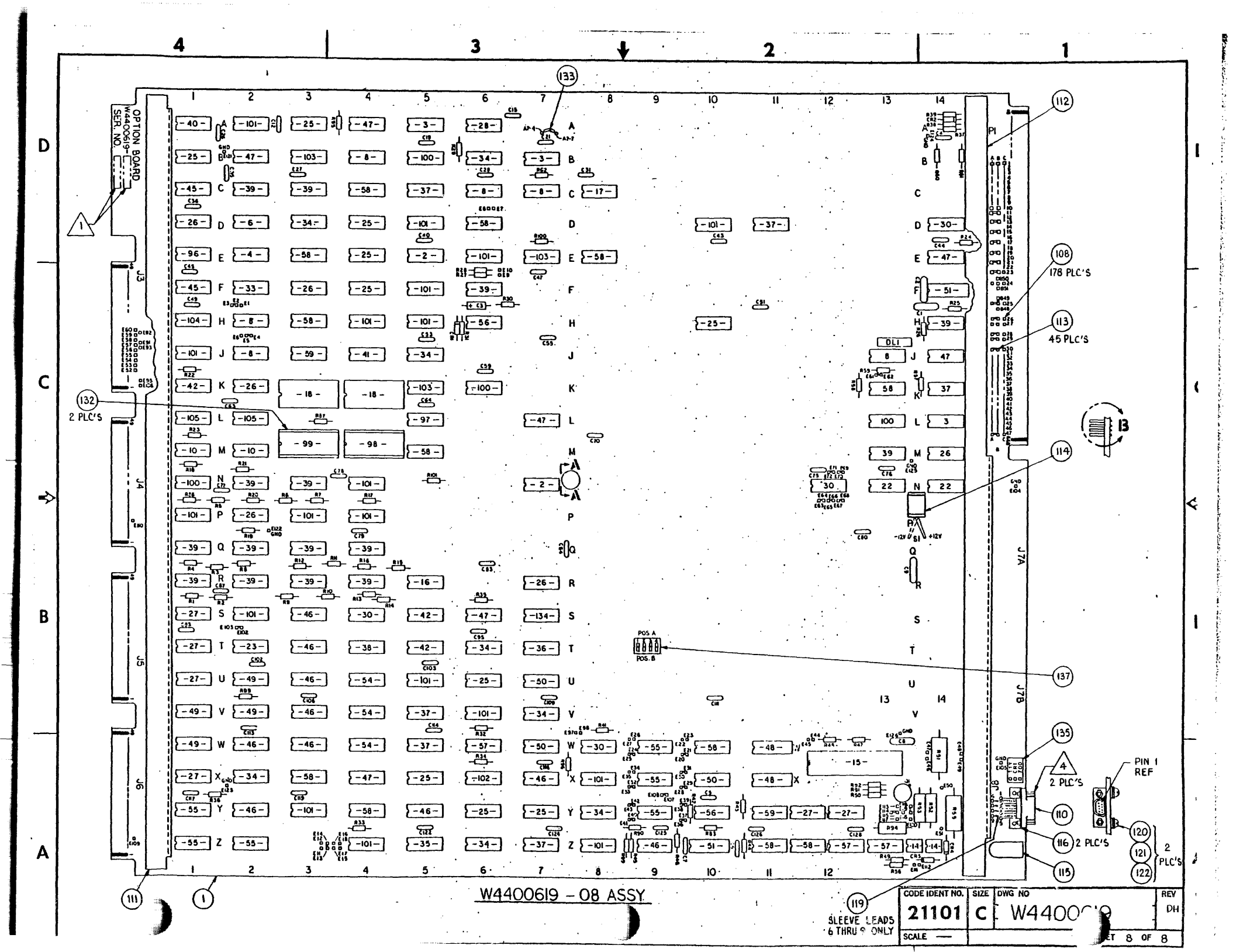
OPTION BOARD W4400619- SER. NO.
2 PLC'S
178 PLC'S
45 PLC'S
2 PLC'S
2 PLC'S
2 PLC'S
PIN 1 REF
SLEEVE LEADS 6 THRU 9 ONLY
W4400619 - 08 ASSY
CODE IDENT NO. 21101
SIZE C
DWG NO W4400[illegible]
REV DH
SCALE —
SHEET 8 OF 8

4 | 3 | 2 | 1

NOTES: (UNLESS OTHERWISE SPECIFIED)

1. POWER AND GND DISTRIBUTION FOR IC'S:

   VOLTAGE: PIN 14 FOR 14 PIN IC'S
   EXCEPTIONS: PIN 4 AT LOCATIONS B4, B8, C6, C7, D8, D9, F10, H2, H8, J2, J13, K8 AND Q6.
   PIN 5 AT LOCATIONS U2, V1, V2, AND W1.
   PIN 16 FOR 16 PIN IC'S
   PIN 24 FOR 24 PIN IC'S
   PIN 1 FOR 40 PIN IC AT LOCATION X13

   GND: PIN 7 FOR 14 PIN IC'S
   EXCEPTIONS: PIN 11 AT LOCATIONS B4, B8, C6, C7, D8, D9 F10, H2, H8, J2, J13, K8 AND Q6.
   PIN 12 AT LOCATIONS U2, V1, V2 AND W1.
   PIN 8 FOR 16 PIN IC'S
   PIN 12 FOR 24 PIN IC'S
   PIN 3 FOR 40 PIN IC AT LOCATION X13

2. ALL RESISTOR VALUES ARE IN OHMS, 1/4W, ± 5%

3. SYMBOL [T] =

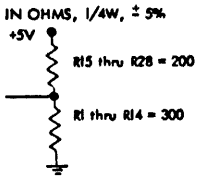

REVISIONS						
ZONE	LTR	EIR	DESCRIPTION — FOR DETAILS SEE	CHK	DATE	APPROVED
MT	BS	85694	REVISED PER EN		10-27-78	GRL
MB	BT	87033	REVISED SHT'S 5.2, 6.2 & 6.3			
MB	BU	87038	REVISED SHT'S 3.1, 6.5, 10.1			
MB	BV	87043	REVISED SHT 6.4			
MB	BW	87799	ADDED SWITCH T9 TO SHT 10.1		5/18/9	
TN	BW	W87474-03	RELEASED TO API			
TN	BY	W94240 -02	REVISED SH'S 2.0, 7.0. UPDATED FORMAT, DOC NO. WAS : 91C0401 INACTIVATED - 00 RELEASED - 01			
VC	BZ	W95039 -01	INACTIVATED - 01, REVISED SH 11.3, RELEASED - 02	PJW	10/9/81	

TABLE OF CONTENTS

DESCRIPTION	SHEET
COVER, TABLE OF CONTENTS	1.0
IC LOCATION CHART	2.0, 2.1
CONNECTORS	3.0, 3.1
POWER, GROUND AND DECOUPLING	4.0
OPTION BOARD COMMON LOGIC	5.0 thru 5.2
I/O	6.0 thru 6.5
PFR	7.0
REAL TIME CLOCK	8.0 thru 8.6
TELETYPE/CRT	9.0 thru 9.3
PARITY	10.0, 10.1
MEMORY PROTECT	11.0 thru 11.5
PMA	12.0 thru 12.10

MULTISTATUS DWG

SEE PL FOR PART NUMBER STATUS

* REF. DES. NOT USED:

C10, 11, 13, 14, 17, 18, 20, 22, 24, 28, 33, 37 38, 39, 41, 42, 46, 48, 50, 52, 54, 56, 58 60, 61, 62, 65, 68, 69, 72, 73, 74, 81, 82, 86 88, 89, 90, 94, 96, 97, 99, 100, 105, 107, 108 112, 115, 118, 120, 121, 123, 127.

REFERENCE DESIGNATIONS	
S1	
TP1	
E126	E19, E94
CR4	
C128	* SEE ABOVE
R101	R40, 54, 84, 85, 86, 93
Q1	
J8	
HIGHEST	NOT USED

COMPANY CONFIDENTIAL INFORMATION

THIS DOCUMENT CONTAINS CONFIDENTIAL INFORMATION OF THE SPERRY RAND CORPORATION. IN CONSIDERATION OF THE RECEIPT OF THIS DOCUMENT, THE RECIPIENT AGREES NOT TO REPRODUCE, COPY, USE OR TRANSMIT THIS DOCUMENT AND/OR THE INFORMATION THEREIN CONTAINED IN WHOLE OR IN PART, OR TO SUFFER SUCH ACTION BY OTHERS, FOR ANY PURPOSE, EXCEPT WITH THE WRITTEN PERMISSION, FIRST OBTAINED, OF SPERRY RAND CORPORATION, AND FURTHER AGREES TO SURRENDER SAME TO SPERRY RAND CORPORATION WHEN THE REASON FOR ITS RECEIPT HAS TERMINATED.

SPERRY UNIVAC IS A DIVISION OF SPERRY RAND CORPORATION

DWG NO. C0401

SHEET	REV
12.4	BY
12.5	BY
12.6	BY
12.7	BY
12.8	BY
12.9	BY
12.10	BY
6.4	BY
8.5	BY
8.6	BY
9.0	BY
9.1	BY
9.2	BY
9.3	BY
10.0	BY
10.1	BY
11.0	BY
11.1	BY
11.2	BY
11.3	BZ
11.4	BY
11.5	BY
12.0	BY
12.1	BY
12.2	BY
12.3	BY
1.C	BZ
2.0	BY
2.1	BY
3.0	BY
4.0	BY
5.0	BY
5.1	BY
5.2	BY
6.0	BY
6.1	BY
6.2	BY
6.3	BY
6.4	BY
6.5	BY
7.0	BY
8.0	BY
8.1	BY
8.2	BY
8.3	BY

SHEET INDEX

REVISION LTR ON FIRST SHEET WILL APPLY TO ALL SHEETS.

ASSEMBLY NO.		IDENT NO. W9100401-02	
LAYOUT	DATE	CLASS A	SPERRY UNIVAC
DRAFTSMAN W. QUEZADA	8/1/72	TITLE	LOGIC DIAGRAM OPTION BOARD DM357
CHECKER R. A. D.	8/1/72		
ENGINEER A. WHITCOMB	8/2/72		
APPROVAL A. WHITCOMB	8/2/72	SIZE C / CODE IDENT NO. 21101 / DWG NO. W9100401 / REV BZ	
		SHEET 1.0 OF	

UDS-4000 12/77 DIETERICH-POST CLEARPRINT MRM-6

LOC	CHIP TYPE	WHERE USED					
A1	74H40	6.0	6.2				
A2	74H04	6.2	6.2	6.4	6.4	6.4	
A3	74H00	6.4	6.4	6.4	6.4		
A4	74H74	6.3	6.3				
A5	74S11	6.1	6.2	6.4			
A6	7403	7.0	7.0	7.0	7.0		
A7	7438	11.2	11.3	11.3			
A8	74S00	11.1	11.3	11.3	11.4		
A9	74H21	11.3	11.3				
A10	7410	11.0	11.0	11.0			
A11	74170	11.5					
A12	74170	11.5					
A13	74150	11.4					
B1	74H00	6.0	6.4	6.4	6.4		
B2	74H74	6.3	6.3				
B3	74S74	6.3	6.4				
B4	74H103	6.3	6.3				
B5	74S04	6.2	6.2	6.2	6.3		
B6	74H11	7.0	7.0	7.0			
B7	74S11	11.2	11.2	11.3			
B8	74H103	11.3	11.3				
B9	74S11	11.3	11.3	11.3			
B10	74H51	11.0	11.0				
B11	74170	11.5					
B12	74170	11.5					
C1	74H54	6.2					
C2	7438	6.4	6.4	6.4	6.4		
C3	7438	6.4	6.4	6.4			
C4	3001	6.2	6.3	6.3	7.0		
C5	74H21	6.2	6.3				
C6	74H103	7.0	7.0				
C7	74H103	11.2	11.2				
C8	7402	11.2	11.3	11.3			
C9	74H11	11.3	11.3	11.3			
C10	74H74	11.0	11.0				
C11	74170	11.5					
C12	74170	11.5					
C13	74170	11.5					
C14	74170	11.5					
D1	74S00	6.2	6.5	6.5	6.5		
D2	74S64	6.2					
D3	74H11	6.1	6.3	6.4			
D4	74H00	6.2	6.2	7.0	11.3		
D5	74H04	6.1	6.2	6.3	6.4	6.4	6.5
D6	3001	7.0	7.0	7.0	11.1		
D7	7403	11.1	11.2				
D8	74H103	11.3	11.3				
D9	74H103	11.2	11.3				
D10	74H04	11.0	11.0	11.0	11.0	11.4	11.5
D11	74H21	11.0	11.0				
D12	7403	11.1	11.1	11.1	11.1		
D13	7403	11.1	11.1	11.1	11.1		
D14	74H05	11.0	11.0	11.0	11.0	11.0	11.0
E1	48A0007-000	6.4	6.4	6.4	6.4	6.4	6.4
		6.4	6.4	6.4	6.4	6.4	6.4
E2	74H20	6.1	6.5				
E3	3001	6.2	6.2	6.2	6.5		
E4	74H00	6.2	6.2	6.2	11.3		
E5	74S10	6.5	11.2				

LOC	CHIP TYPE	WHERE USED					
E6	74H04	7.0	7.0	7.0	7.0	10.1	11.2
E7	74S74	6.4	7.0				
E8	3001	11.2	11.3	11.3	11.3		
E9	3001	11.2	11.3	11.3	12.9		
E10	74H74	11.0	11.0				
E11	74H74	11.0	11.0				
E12	7403	11.1	11.1	11.1	11.1		
E13	74175	11.4					
E14	74H74	6.5	6.5				
F1	74H54	6.1					
F2	74H10	6.1	6.1	6.4			
F3	74S00	6.0	6.0	6.1	6.1		
F4	74H00	6.1	6.2	6.3	6.3		
F5	74H04	6.4	6.4	6.4	6.4	6.4	11.2
F6	7438	7.0	7.0	7.0	7.0		
F7	3404	12.2	12.2				
F8	3001	11.2	11.2	11.2	11.2		
F9	3003	11.1	11.2	11.3	12.7		
F10	74H103	11.2	11.2				
F11	7403	11.1	11.1	11.1	11.1		
F12	7403	11.1	11.1	11.1	11.1		
F13	74175	11.4					
F14	74123	6.5	6.5				
H1	74S112	6.0	6.1				
H2	74H103	6.0	6.1				
H3	3001	6.0	6.1	6.1	11.2		
H4	74H04	6.0	6.1	6.1	6.2	6.2	6.2
H5	74H04	6.3	6.4	6.4	6.4	6.4	6.4
H6	74122	7.0					
H7	8T14	12.2	12.2				
H8	74H103	11.2	11.2				
H9	74H74	11.2	11.3				
H10	74H00	7.0	11.1	11.1	11.2		
H11	74175	11.4					
H12	74175	11.4					
H13	74H04	11.4	11.4	11.4	11.4	11.4	11.4
H14	7438	6.5	6.5	12.2	12.2		
J1	74H04	6.0	6.0	6.0	6.0		
J2	74H103	6.0	6.0				
J3	3003	6.2	6.3	6.4	6.4		
J4	7442	6.2					
J5	74H11	6.1	12.10	12.10			
J6	74S10	12.9	12.10	12.10			
J7	74H108	12.10	12.10				
J8	74S114	12.9	12.10				
J9	7438	12.2	12.2				
J10	7438	12.0	12.0	12.0	12.0		
J11	7438	12.1	12.1	12.1	12.1		
J12	7438	12.2	12.2	12.2	12.2		
J13	74H103	10.0	10.1				
J14	74H74	10.0	10.0				
K1	74H50	6.1	6.2				
K2	74S00	6.5	6.5	6.5	6.5		
K3	74198	6.0					
K4	74198	6.0					
K5	74S74	6.3	6.4				
K6	74S04	6.5	6.5	12.6	12.6	12.8	12.10
K7	74S00	12.10	12.10	12.10	12.10		
K8	74H103	12.9	12.9				
K9	7438	12.0	12.0	12.1	12.1		
K10	3404	12.0	12.0	12.0	12.0	12.0	12.0
K11	3404	12.1	12.1	12.1	12.1	12.1	12.1
K12	3404	12.2	12.2	12.2	12.2	12.2	12.2

LOC	CHIP TYPE	WHERE USED					
K13	3001	10.0	10.0	10.0	10.0		
K14	74H21	10.0	10.0				
L1	74161	6.0					
L2	74161	6.0					
L5	74H55	6.3					
L6	3001	12.9	12.10	12.10	12.10		
L7	74H74	6.1	12.10				
L8	74H21	12.6	12.9				
L9	74S10	12.9	12.9				
L10	8T14	12.0	12.0	12.0			
L11	8T14	12.1	12.1	12.1			
L12	8T14	12.2	12.2	12.2			
L13	74S04	10.1	10.1	10.1	10.1	10.1	10.1
L14	74S11	10.0	10.1	10.1			
M1	74157	6.0					
M2	74157	6.0					
M3	8204	6.0					
M4	8204	6.0					
M5	3001	6.1	11.2	11.3	11.3		
M6	7438	12.8	12.10				
M7	7438	12.10	12.10				
M8	74S20	12.9	12.9				
M9	74H00	12.6	12.7	12.9			
M10	8T14	12.0	12.0	12.0			
M11	8T14	12.1	12.1	12.1			
M12	8T14	12.2	12.2	12.2			
M13	7438	10.0	10.0	10.1	10.1		
M14	74S00	10.0	10.1	10.1	10.1		
N1	74S04	5.2	5.2	5.2	5.2		
N2	7438	5.2					
N3	7438	6.4	6.4	6.4	6.4		
N4	74H04	5.2	5.2	5.2	5.2	5.2	5.2
N6	74H108	12.6					
N7	74S10	6.4	12.10				
N8	74S00	12.9	12.9	12.9	12.9		
N9	74S11	12.7	12.9	12.10			
N10	74S20	12.9					
N11	74S114	12.9	12.9				
N12	74H05	10.0	10.0	10.0	10.0	10.0	10.0
N13	82S62	10.1					
N14	82S62	10.1					
P1	74H04	5.0	5.0	5.0	5.0	5.0	5.0
P2	74S00	5.2	5.2	5.2			
P3	74H04	5.0	5.1	5.1	5.1	5.1	5.1
P4	74H04	5.1	5.1	5.2	5.2	5.2	5.2
P6	74H00	12.6	12.6	12.6	12.6		
P7	3001	12.10	12.10	12.10	12.10		
P8	74S04	12.7	12.8	12.9	12.9	12.9	
P9	74S00	12.6	12.7	12.8	12.9		
P10	74S112	12.7	12.9				
P11	74S114	12.9	12.9				
P12	7438	12.5	12.5	12.5	12.5		
P13	7438	12.4	12.4	12.4	12.4		
P14	7438	12.3	12.3	12.3	12.3		

CODE IDENT NO.	SIZE	DWG NO	REV
21101	C	W9100401	BY
SCALE		SHEET 2.0 OF	

4 3 2 1

LOC	CHIP TYPE	WHERE USED					
Q1	7438	5.0	5.0	5.0	5.0		
Q2	7438	5.0	5.0	5.0	5.1		
Q3	7438	5.1	5.1	5.1	5.1		
Q4	7438	5.1	5.1	5.2	5.2		
Q5							
Q6	74H103	12.6	12.8				
Q7	74H108	12.10	12.10				
Q8	8T14	12.8	12.8	12.8			
Q9	7438	12.7	12.7	12.7	12.7		
Q10	48A0007-000	12.6	12.6	12.6	12.6	12.7	12.7
		12.7	12.7	12.8	12.8	12.8	12.8
		12.8					
Q11	7438	12.3	12.3	12.3	12.3		
Q12	3404	12.5	12.5	12.5	12.5	12.5	12.5
Q13	3404	12.4	12.4	12.4	12.4	12.4	12.4
Q14	3404	12.3	12.3	12.3	12.3	12.3	12.3
R1	7438	5.0	5.0	5.0	5.0		
R2	7438	5.0	5.0	5.0	5.1		
R3	7438	5.1	5.1	5.1	5.1		
R4	7438	5.1	5.1	5.2	5.2		
R5	74S113	5.2	5.2				
R6	SPARE	(14 PIN)					
R7	74S00	6.3	12.10	12.10	12.10		
R8	74H04	12.7	12.8	12.8	12.8	12.8	12.10
R9	74H53	12.7					
R10	8T14	12.6	12.6	12.8			
R11	7438	12.5	12.5	12.5	12.5		
R12	74H04	12.5	12.5	12.5	12.5	12.5	12.5
R13	74H04	12.4	12.4	12.4	12.4	12.4	12.4
R14	74H04	12.3	12.3	12.3	12.3	12.3	12.3
S1	74H01	8.0	8.0	8.0	8.0		
S2	74H04	8.0	8.0	8.3	8.3	8.3	8.3
S3	7474	8.4	8.4				
S4	74H05	8.0	8.0	8.0	8.1	8.6	10.0
S5	74H50	8.6	8.6				
S6	74H74	8.1	8.1				
S7	74S74	8.3	12.6				
S8	7438	12.8	12.8	12.8	12.8		
S9	74S64	12.7					
S10	74S74	12.6	12.6				
S11	7438	12.4	12.4	12.5	12.5		
S12	74174	12.5	12.5	12.5	12.5	12.5	12.5
S13	74174	12.4	12.4	12.4	12.4	12.4	12.4
S14	74174	12.3	12.3	12.3	12.3	12.3	12.3
T1	74H01	8.0	8.0	8.0	8.0		
T2	4006	8.0					
T3	7474	8.4	8.4				
T4	74H30	8.0					
T5	74H50	8.6	8.6				
T6	74H11	8.1	8.1	12.6			
T7	7420	8.3	8.6				
T8	74S11	12.8	12.8	12.8			
T9							
T10	74S11	12.6	12.6	12.6			
T11	7438	12.4	12.4	12.5	12.5		
T12	8T14	12.5	12.5	12.5			
T13	8T14	12.4	12.4	12.4			
T14	8T14	12.3	12.3	12.3			
U1	74H01	8.0	8.0	8.0	8.0		
U2	7493	8.3	8.3	8.3	8.3		
U3	7474	8.4	8.4				
U4	74193	8.5					
U5	74H04	8.4	8.4	8.4	8.4	8.4	8.4

LOC	CHIP TYPE	WHERE USED					
U6	74H00	6.1	8.0	8.1	8.6		
U7	74H108	8.5	8.6				
U8	74S11	11.3	12.8	12.10			
U9	93H72	12.7					
U10	74S74	12.6	12.6				
U11	7438	12.3	12.3	12.3	12.3		
U12	8T14	12.5	12.5	12.5			
U13	8T14	12.4	12.4	12.4			
U14	8T14	12.3	12.3	12.3			
V1	7493	8.3	8.3	8.3	8.3		
V2	7493	8.3	8.3	8.3	8.3		
V3	7474	8.4	8.4				
V4	74193	8.5					
V5	74H21	8.5	8.5				
V6	74H04	8.1	8.3	8.4	8.5	8.1	
V7	74H11	8.5	8.6	12.9			
V8	74S11	12.7	12.8	12.10			
V9	74S11	12.7	12.7	12.7			
V10	8T14	12.6	12.6				
V11	7438	12.4	12.4	12.4	12.4		
V12	48A0007-000	12.0	12.0	12.0	12.0	12.0	12.1
		12.1	12.5	12.5	12.5	12.5	12.5
		12.5					
V13	48A0007-000	12.1	12.1	12.1	12.1	12.2	12.2
		12.4	12.4	12.4	12.4	12.4	12.4
V14	48A0007-000	12.0	12.2	12.2	12.2	12.2	12.2
		12.2	12.3	12.3	12.3	12.3	12.3
		12.3	12.8				
W1	7493	8.3	8.3	8.3	8.3		
W2	7474	8.4	8.4				
W3	7474	8.4	8.4				
W4	74193	8.5					
W5	74H21	8.5	8.5				
W6	6006	8.0	8.6				
W7	74H108	8.5	8.6				
W8	74H05	9.0	9.0	9.0	9.0	9.0	9.0
W9	74197	9.1					
W10	3001	9.0	9.0	9.0	9.1		
W11	7475	9.1	9.1	9.1	9.1		
X1	74H01	8.0					
X2	74H11	8.1	8.1	8.2			
X3	3001	8.0	8.0	8.2	8.2		
X4	74H74	8.1	8.1				
X5	74H00	8.5	8.5	8.5	8.5		
X6	7410	8.0	8.1	8.6			
X7	7474	8.6	8.6				
X8	74H04	8.6	9.0	9.0	9.0	9.0	9.1
X9	74197	9.1					
X10	74H108	9.0	9.0				
X11	7475	9.1	9.1	9.1	9.1		
X13	IM6402	9.2					
Y1	74197	8.2					
Y2	7474	8.2	8.2				
Y3	74H04	8.0	8.0	8.0	8.0	8.1	8.2
Y4	3001	8.0	8.1	8.1	8.5		
Y5	7474	8.5	8.5				
Y6	74H00	8.1	9.0				

LOC	CHIP TYPE	WHERE USED					
Y7	74H00	8.6					
Y8	74H11	9.0	9.0	9.1			
Y9	74197	9.1					
Y10	74122	9.0					
Y11	3003	9.0	9.0	9.0	9.0		
Y12	74H01	9.2	9.2	9.2	9.2		
Y12.5	74H01	9.2	9.2	9.2	9.2		
Z1	74197	8.2					
Z2	74197	8.2					
Z3							
Z4	74H04	8.1	8.2	8.2	8.2	8.6	8.6
Z5	7413	8.2					
Z6	74H11	8.6	8.6	8.6			
Z7	74H21	8.5					
Z8	74H04	9.0	9.0	9.1	9.2	9.2	9.3
Z9	7474	9.1	9.1				
Z10	74123	9.0	9.1				
Z11	3001	9.0	9.0	9.0	9.1		
Z12	3001	8.6	9.2	9.2			
Z12.5	6006	9.0	9.3				
Z13	6006	9.0	9.0				
Z13.5	48A0005-000	9.3					
Z14	48A0005-000	9.3					

CODE IDENT NO.	SIZE	DWG NO	REV
21101	C	W9100401	BY
SCALE		SHEET 2.1 OF	

J3 CONNECTOR

Pin	Function	Sheet
1	GND	4.0
2	GND	4.0
3	IUBB-I	9.0
4	GND	4.0
5	IUAA-I	9.0
6	GND	4.0
7	SPFA-	7.0
8	GND	4.0
9	PRIX-I	10.0
10	GND	4.0
11	PR2X-I	10.0
12	GND	4.0
13	PR3X-I	10.0
14	GND	4.0
15	PR4X-I	10.0
16	GND	4.0
17	PR5X-I	10.0
18	GND	4.0
19	PR6X-I	10.0
20	GND	4.0
21	PR7X-I	10.0
22	GND	4.0
23	PR8X-I	10.0
24	GND	4.0
25	PR9X-I	10.0
26	GND	4.0
27	BTMES-I	N/U
28	GND	4.0
29	IØK1-I	N/U
30	IØK2-I	N/U
31	IØK3-I	N/U
32	IØK4-I	N/U
33	GND	N/U
34	BIMES-I	N/U
35	GND	N/U
36	(SPARE)	N/U
37	(SPARE)	N/U
38	GND	4.0
39	TPØF-I	6.4
40	GND	4.0
41	TPIF-I	6.4
42	GND	4.0
43	IUCF-I	6.4
44	GND	4.0
45	FRYF-I	6.4
46	GND	4.0
47	IUAF-I	6.4
48	GND	4.0
49	DRYF-I	6.4
50	GND	4.0

J4 CONNECTOR

Pin	Function	Sheet
1	GND	4.0
2	CBTS0+	6.0
3	ICD3+	6.5
4	CBTS1+	6.0
5	ICD2+	6.5
6	CBTS2+	6.0
7	ICD1+	6.0
8	CBTS3+	6.0
9	ICD4A+	6.0
10	CINTF+	6.3
11	IRQM-	6.0
12	PRIX-I	10.0
13	ICD0+	6.4
14	DJUMP+	11.3
15	MIL14A-	8.6
16	CBAB0+	6.4
17	ISRD+	6.3
18	CBAB1+	6.0
19	CINMPC-	11.3
20	IIA0+	6.4
21	ØINT-	11.2
22	MTRC-	5.2
23	IRQC-	6.4
24	CAC1DE+	11.2
25	MHC-	5.2
26	IIA3+	N/U
27	CBMT+	6.0
28	IIA2+	6.4
29	CIDIØ+	11.2
30	IIA1+	6.4
31	MIMC1+	11.3
32	MØCLK+	5.2
33	IWRMC-	6.2
34	MTMII+	11.3
35	IWLMC-	6.2
36	CBMR+	6.0
37	MAKIØ+	6.2
38	MFC-	5.2
39	MRS2A-	11.3
40	CPMAST+	12.8
41	OROM-	12.9
42	CCS3D+	8.6
43	MAKØ+	10.1
44	IAKCI-	6.3
45	CIDHLT+	11.2
46	CRQIØ+	6.1
47	CIDJMK+	11.2
48	IDNC-	6.2
49	MCRB+	11.3
50	GND	4.0

J5 CONNECTOR

Pin	Function	Sheet
1	GND	4.0
2	EB00-I	5.0
3	EB01-I	5.0
4	EB02-I	5.0
5	EB03-I	5.0
6	EB04-I	5.0
7	EB05-I	5.0
8	EB06-I	5.0
9	EB07-I	5.1
10	EB08-I	5.1
11	EB09-I	5.1
12	EB10-I	5.1
13	EB11-I	5.1
14	EB12-I	5.1
15	EB13-I	5.1
16	EB14-I	5.2
17	EB15-I	5.2
18	GND	4.0
19	NSS2-	N/U
20	NSS1-	N/U
21	NSS3-	N/U
22	GND	4.0
23	IEIDLA+	6.0
24	GND	4.0
25	NSTP-	N/U
26	GND	4.0
27	ØPSTRT-	7.0
28	GND	4.0
29	PRIØX-I	10.0
30	GND	4.0
31	SERX-I	9.0
32	GND	4.0
33	IURX-I	5.2
34	GND	4.0
35	TPØX-I	6.4
36	GND	4.0
37	TPIX-I	6.4
38	GND	4.0
39	IUAX-I	5.2
40	GND	4.0
41	FRYX-I	5.2
42	GND	4.0
43	IUCX-I	5.2
44	GND	4.0
45	SYRT-I	5.2
46	GND	4.0
47	DRYX-I	5.2
48	GND	4.0
49	IUJX-I	5.2
50	GND	4.0

J6 CONNECTOR

Pin	Function	Sheet
1	GND	4.0
2	CESK+	N/U
3	CPMAST+	N/U
4	CIDXX5+	N/U
5	NSTP-	N/U
6	ØINT-	N/U
7	NSS3-	N/U
8	NSS1-	N/U
9	NSS2-	N/U
10	CIDXX3+	N/U
11	PRJX-I	10.0
12	PEXMSI3+	N/U
13	MFC-	5.2
14	GND	4.0
15	IRØ15+	6.0
16	IRØ14+	6.0
17	IRØ13+	6.0
18	IRØ12+	6.0
19	IRØ11+	6.0
20	IRØ10+	6.0
21	IRØ09+	6.0
22	IRØ08+	6.0
23	IRØ07+	6.0
24	IRØ06+	6.0
25	IRØ05+	6.0
26	IRØ04+	6.0
27	IRØ03+	6.0
28	IRØ02+	6.0
29	IRØ01+	6.0
30	IRØ00+	6.0
31	GND	4.0
32	IRA07+	6.0
33	IRA06-	6.0
34	IRA01+	6.0
35	IRA04+	6.0
36	IRA03+	6.0
37	IRA05+	6.0
38	IRA02-	6.0
39	IRA00+	6.0
40	GND	4.0
41	XIOCE-	6.0
42	CIDØØ+	N/U
43	CIDIØ+	11.2
44	IINHC-	6.2
45	BINTE-	11.2
46	AREAD-	12.10
47	BINIØ-	11.2
48	MIRAB+	N/U
49	MIMCØ+	N/U
50	GND	4.0

CODE IDENT NO.	SIZE	DWG NO	REV
21101	C	W9100401	BY
SCALE			SHEET 3.0 OF

6/77 DIETERICH-POST CLEARPRINT

P1 CONNECTOR

Pin	Function	Sheet	Pin	Function	Sheet
A01	+12V Mem	4.0	B01	+20V MEM	N/U
A02	+20.6V	N/U	B02	+20.6V	N/U
A03	-12V	4.0	B03	-12V	4.0
A04	-12V	4.0	B04	-12V	4.0
A05	LFRTC+	8.2	B05	+5V MEM	N/U
A06	+5V	4.0	B06	+5V	4.0
A07	+5V	4.0	B07	+5V	4.0
A08	+5V	4.0	B08	+5V	4.0
A09	GND	4.0	B09	GND	4.0
A10	SPFA-	7.0	B10	SRST-	6.2
A11	MYAA00+	12.0	B11	MYAB00+	12.0
A12	MYAA01+	12.0	B12	MYAB01+	12.0
A13	MYAA02+	12.0	B13	MYAB02+	12.0
A14	MYAA03+	12.0	B14	MYAB03+	12.0
A15	MYAA04+	12.0	B15	MYAB04+	12.0
A16	MYAA05+	12.0	B16	MYAB05+	12.0
A17	MYAA06+	12.1	B17	MYAB06+	12.1
A18	MYAA07+	12.0	B18	MYAB07+	12.1
A19	MYAA08+	12.0	B19	MYAB08+	12.1
A20	MYAA09+	12.1	B20	MYAB09+	12.1
A21	MYMA09+	N/U	B21	MYMB09+	12.1
A22	MYAA10+	12.1	B22	MYAB10+	12.1
A23	MYMA10+	N/U	B23	MYMB10+	12.1
A24	MYAA11+	12.1	B24	MYAB11+	12.1
A25	MYMA11+	N/U	B25	MYMB11+	12.1
A26	MYAA12+	12.2	B26	MYAB12+	12.2
A27	MYMA12+	N/U	B27	MYMB12+	12.2
A28	MYAA13+	12.2	B28	MYAB13+	12.2
A29	MYMA13+	N/U	B29	MYMB13+	12.2
A30	MYAA14+	12.2	B30	MYAB14+	12.2
A31	MYMA14+	N/U	B31	MYMB14+	12.2
A32	MYAA15+	12.2	B32	MYAB15+	12.2
A33	MYMA15+	N/U	B33	MYMB15+	12.2
A34	MYKA16+	N/U	B34	MYKB16+	12.2
A35	MYKA17+	N/U	B35	MYKB17+	12.2
A36	MYKA18+	N/U	B36	MYKB18+	12.2
A37	MYKA19+	N/U	B37	MYBK19+	12.2
A38	GND	4.0	B38	GND	4.0
A39	MRQYA-	6.5	B39	MRQYB-	6.5
A40	MRMYA-	6.5	B40	MRMYB-	6.5
A41	GND	4.0	B41	GND	4.0
A42	YDNMA-	6.5	B42	YDNMB-	6.5
A43	MHMY-	12.8	B43	MHGY-	12.8
A44	GND	4.0	B44	GND	4.0
A45	MWRYA+	12.10	B45	MWRYB+	12.10
A46	MWLYA+	12.10	B46	MWLYB+	12.10
A47	GND	4.0	B47	GND	4.0
A48	MYDA00-	12.3	B48	MYDB00-	12.3
A49	MYDA01-	12.3	B49	MYDB01-	12.3
A50	MYDA02-	12.3	B50	MYDB02-	12.3
A51	MYDA03-	12.3	B51	MYDB03-	12.3
A52	MYDA04-	12.3	B52	MYDB04-	12.3
A53	MYDA05-	12.3	B53	MYDB05-	12.3
A54	MYDA06-	12.4	B54	MYDB06-	12.4
A55	MYDA07-	12.4	B55	MYDB07-	12.4
A56	MYDA08-	12.4	B56	MYDB08-	12.4
A57	MYDA09-	12.4	B57	MYDB09-	12.4
A58	MYDA10-	12.4	B58	MYDB10-	12.4
A59	MYDA11-	12.4	B59	MYDB11-	12.4
A60	MYDA12-	12.5	B60	MYDB12-	12.5
A61	MYDA13-	12.5	B61	MYDB13-	12.5
A62	MYDA14-	12.5	B62	MYDB14-	12.5
A63	MYDA15-	12.5	B63	MYDB15-	12.5
A64	MYDA16-	12.5	B64	MYDB16-	12.5
A65	MYDA17-	12.5	B65	MYDB17-	12.5
A66	GND	4.0	B66	GND	N/U

J7A CONNECTOR

Pin	Function	Sheet
1	GND	4.0
2	GND	4.0
3	GND	4.0
4	GND	4.0
5	DTRDY-	N/U
6	GND	4.0
7	START-	12.8
8	GND	4.0
9	GØ-	12.8
10	GND	4.0
11	HØG-	12.8
12	GND	4.0
13	PMRS-	12.8
14	GND	4.0
15	ACK4-	12.7
16	GND	4.0
17	ACK3-	12.7
18	GND	4.0
19	ACK1-	12.7
20	GND	4.0
21	ACK2-	12.7
22	GND	4.0
23	REQ3-	12.6
24	GND	4.0
25	READ-	12.8
26	GND	4.0
27	(SPARE)	N/U
28	GND	4.0
29	REQ4-	12.6
30	GND	4.0
31	(SPARE)	N/U
32	GND	4.0
33	SYRT-P	12.8
34	GND	4.0
35	REQ1-	12.6
36	GND	4.0
37	REQ2-	12.6
38	GND	4.0
39	SPARE	N/U
40	GND	4.0

J7B CONNECTOR

Pin	Function	Sheet
1	GND	4.0
2	PA00+	12.0
3	PA01+	12.0
4	PA02+	12.0
5	PA03+	12.0
6	PA04+	12.0
7	PA05+	12.0
8	PA06+	12.1
9	PA07+	12.1
10	PA08+	12.1
11	PA09+	12.1
12	PA10+	12.1
13	PA11+	12.1
14	PA12+	12.2
15	PA13+	12.2
16	PA14+	12.2
17	PA15+	12.2
18	PA16+	12.2
19	PA17+	12.2
20	PA18+	12.2
21	PA19+	12.2
22	PD00+	12.3
23	PD01+	12.3
24	PD02+	12.3
25	PD03+	12.3
26	PD04+	12.3
27	PD05+	12.3
28	PD06+	12.4
29	PD07+	12.4
30	PD08+	12.4
31	PD09+	12.4
32	PD10+	12.4
33	PD11+	12.4
34	PD12+	12.5
35	PD13+	12.5
36	PD14+	12.5
37	PD15+	12.5
38	PD16+	12.5
39	PD17+	12.5
40	GND	4.0

J8 CONNECTOR

Pin	Function	Sheet
1	TTYT-	9.3
2	TYCL2	9.3
3	TTYR+	9.3
4	TYCLR-(GND)	9.3
5		N/U
6	TTYR-	9.3
7	TYCLI	9.3
8	TTYT+	9.3
9		N/U

CODE IDENT NO.	SIZE	DWG NO	REV
21101	C	W9100401	BY
SCALE		SHEET 3.1 OF	

8/77 DIETZGEN-POST CLEARPRINT

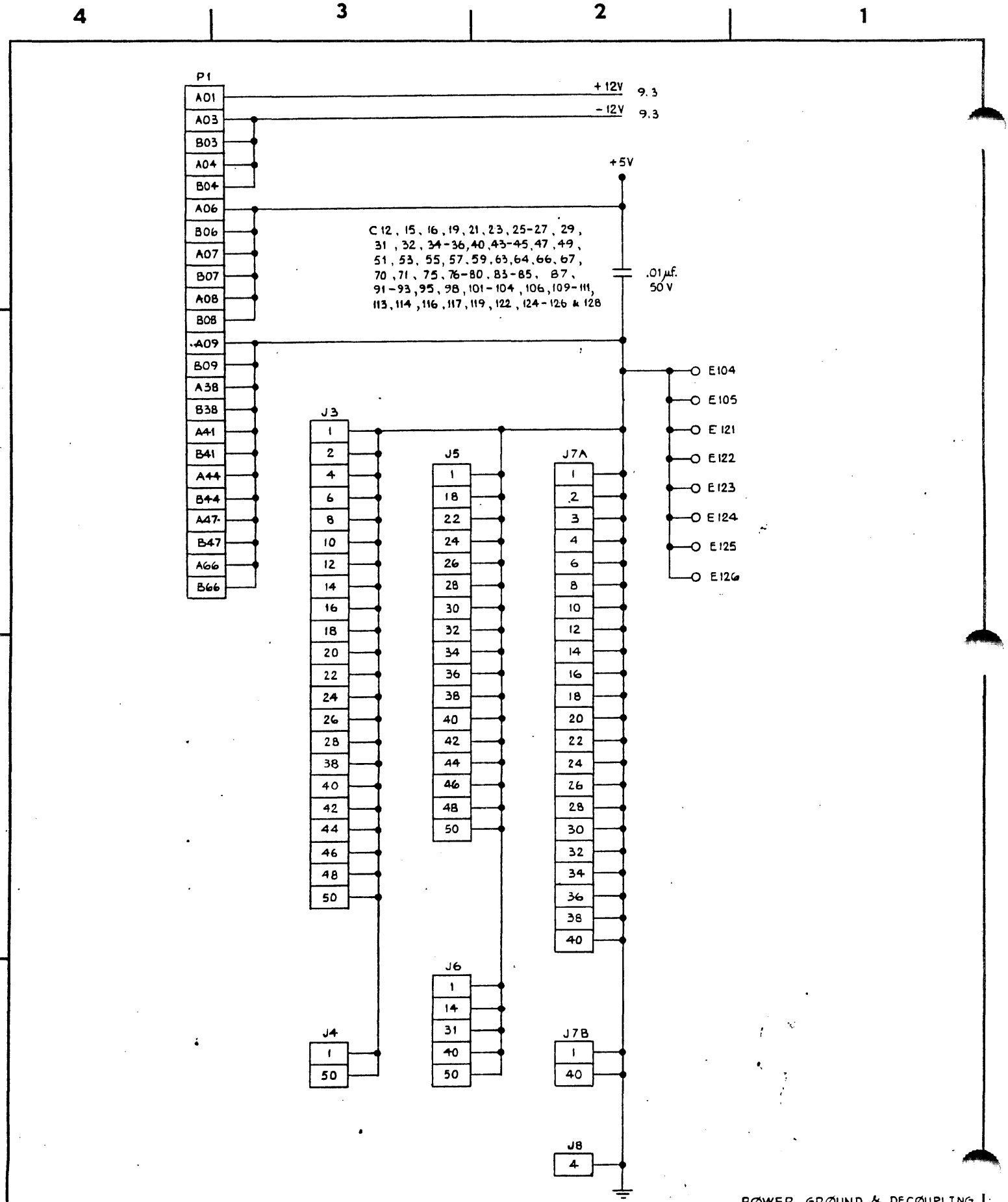

PØWER, GRØUND & DECØUPLING

CODE IDENT NO.	SIZE	DWG NO	REV
21101	C	W 9100401	BY
SCALE			SHEET 4.0 OF

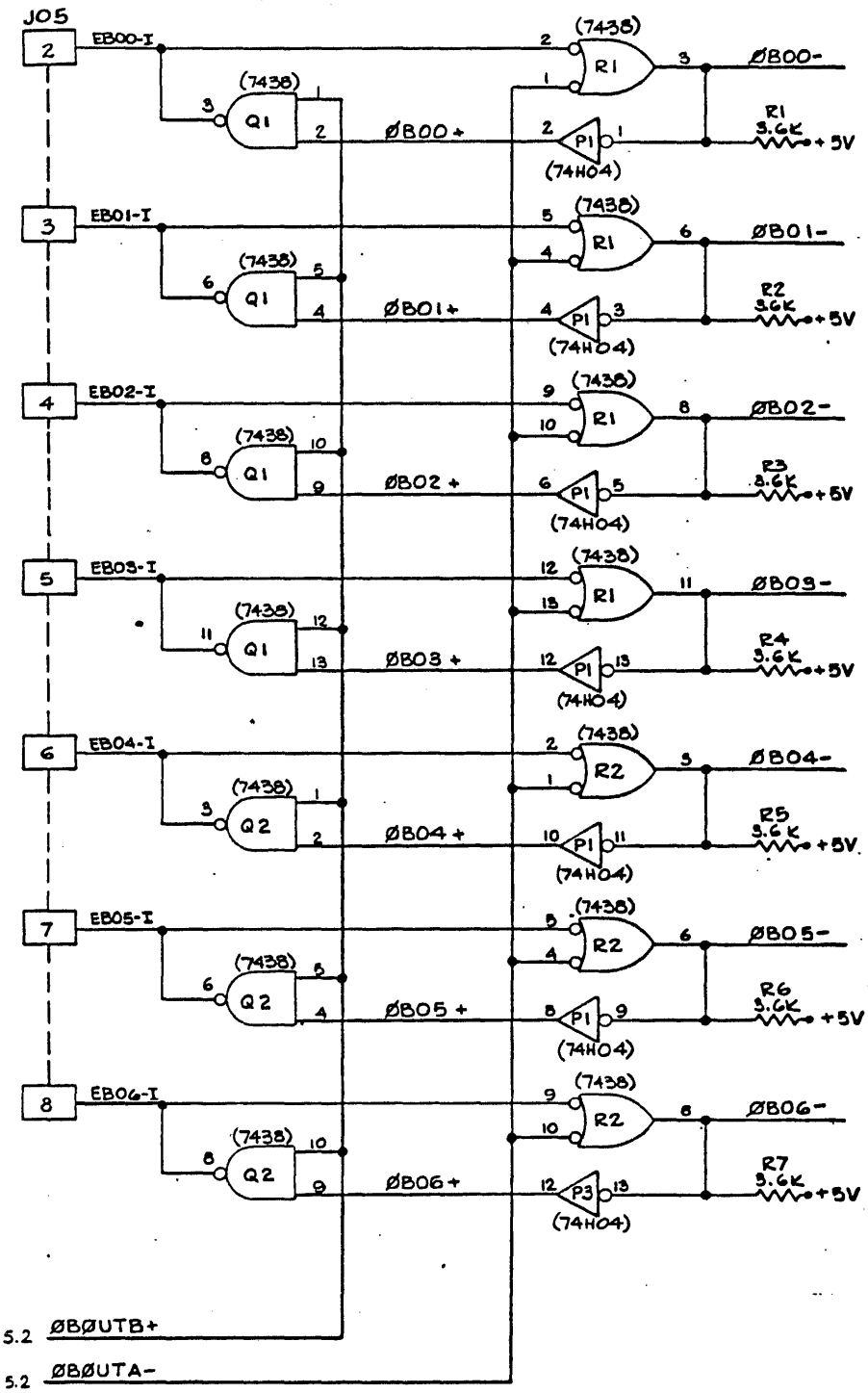

1. (X.X) = SØURCE SHEET

OPTION BOARD, COMMON LOGIC

CODE IDENT NO.	SIZE	DWG NO	REV
21101	C	W9100401	BY
SCALE			SHEET 8.0 OF

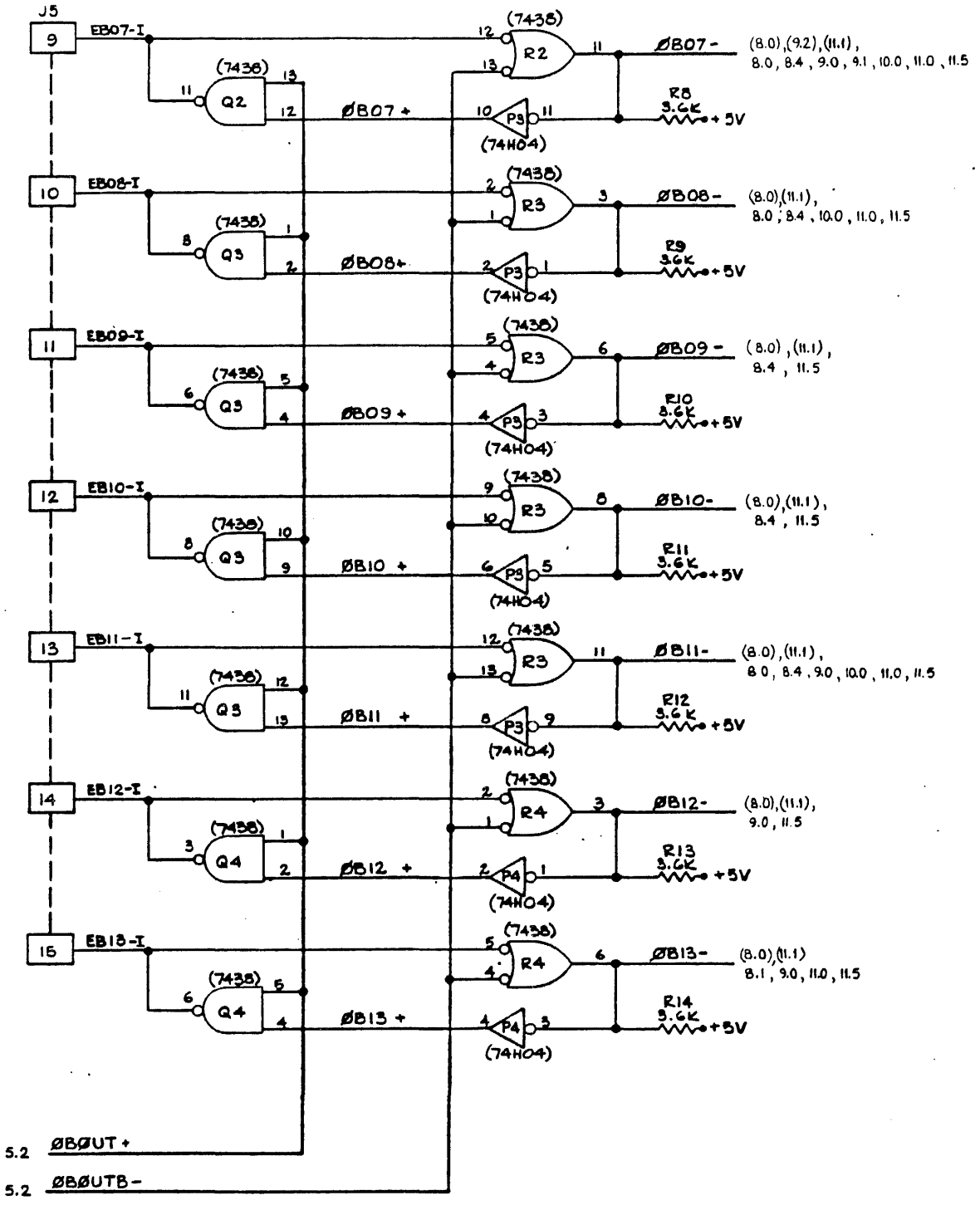

NOTE. 1. (X.X) = SOURCE SHEET

OPTION BOARD, COMMON LOGIC

CODE IDENT NO.	SIZE	DWG NO	REV
21101	C	W9100401	BY
SCALE		SHEET 5.1 OF	

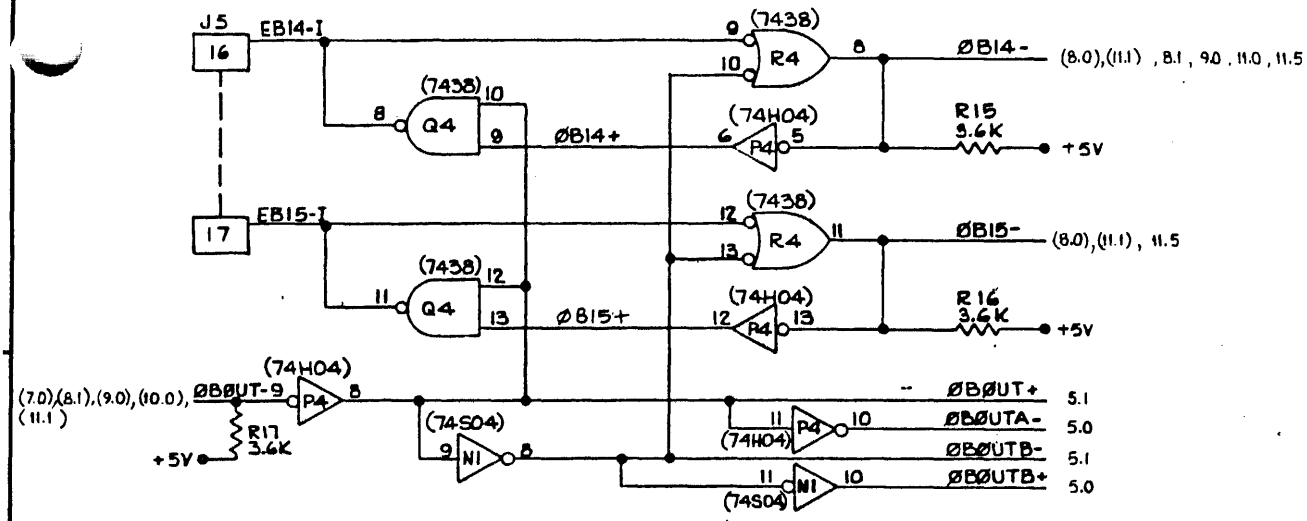

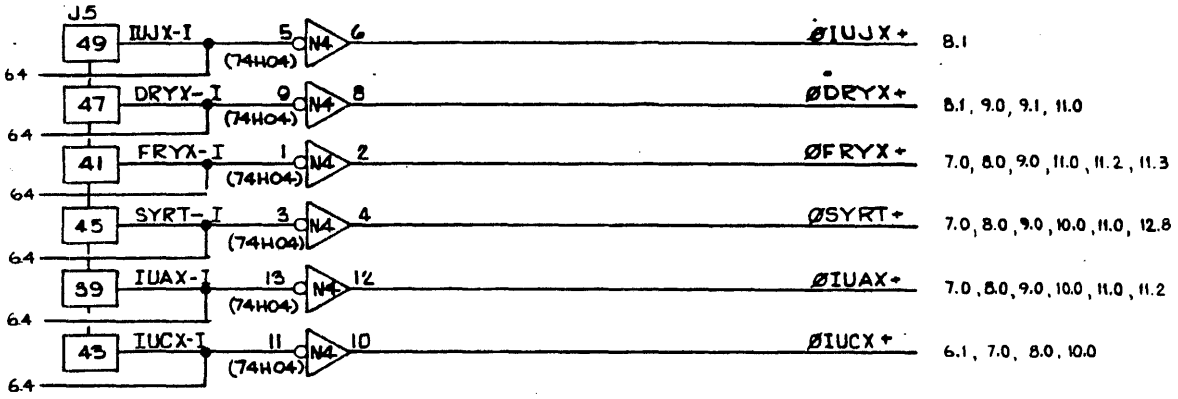

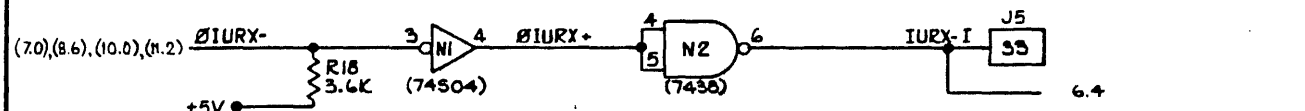

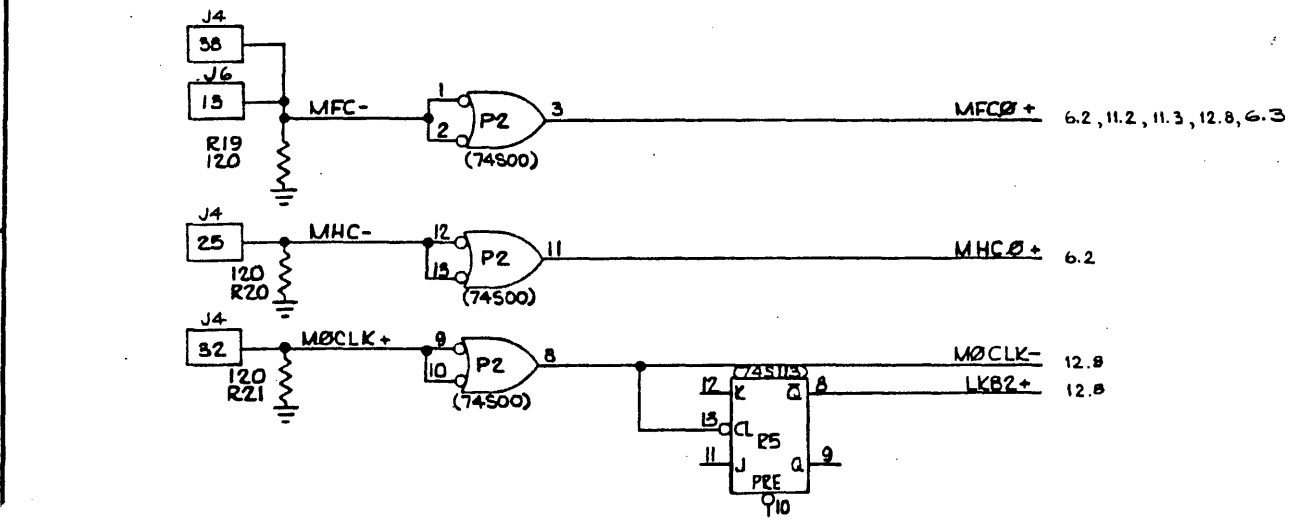

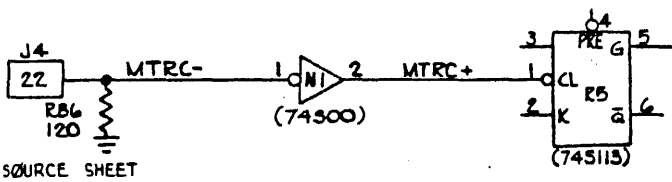

NOTE: 1. (X.X) = SOURCE SHEET

OPTION BOARD COMMON LOGIC

CODE IDENT NO.	SIZE	DWG NO	REV
21101	C	W9100401	BY
SCALE		SHEET 5.2 OF	

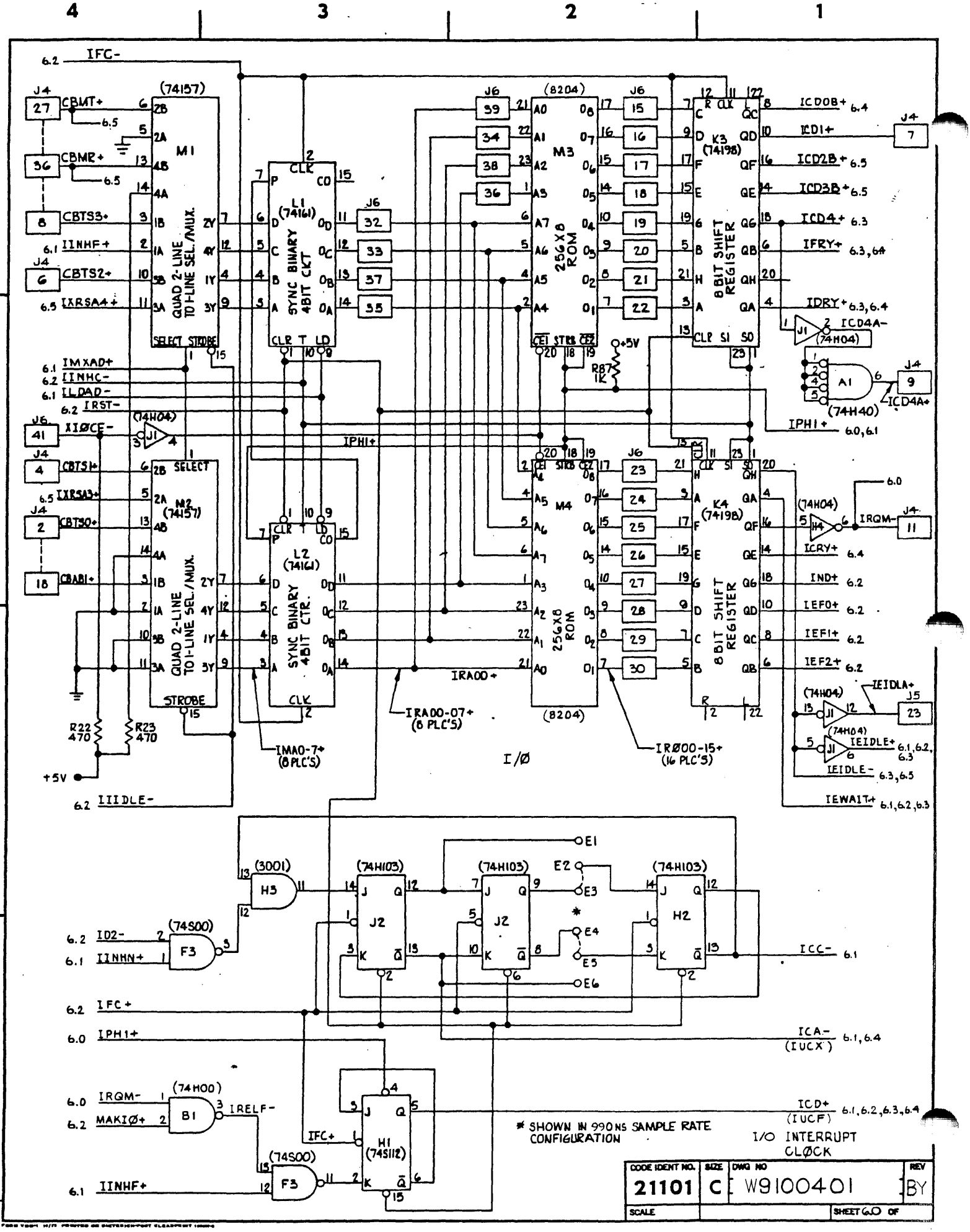
4
3
2
1
6.2 IFC-
J4 27 CBMT+ 6.5
36 CBMR+ 6.5
8 CBTS3+
6.1 IINHF+
J4 6 CBTS2+
6.5 IXRSA4+
(74157) M1 QUAD 2-LINE TO 1-LINE SEL./MUX.
SELECT STROBE
(74161) L1 SYNC BINARY 4BIT CKT
CLR T LD
J6 32 33 37 35
(8204) M3 256X8 ROM
J6 39 34 38 36
J6 15 16 17 18 19 20 21 22
8 BIT SHIFT REGISTER K3 (74198)
ICD0B+ 6.4
ICD1+ J4 7
ICD2B+ 6.5
ICD3B+ 6.5
ICD4+ 6.3
IFRY+ 6.3,6.4
IDRY+ 6.3,6.4
ICD4A-
(74H04) J1
A1 (74H40) J4 9 ICD4A+
+5V R87 1K
IPH1+ 6.0,6.1
6.1 IMXAD+
6.2 IINHC-
6.1 ILDAD-
6.2 IRST-
J6 41 XIØCE-
(74H04) J1
IPH1+
J4 4 CBTS1+
6.5 IXRSA3+
J4 2 CBTS0+
18 CBABI+
(74157) M2 QUAD 2-LINE TO 1-LINE SEL./MUX.
SELECT STROBE
(74161) L2 SYNC BINARY 4BIT CTR.
CLR T LD CLK
J6 23 24 25 26 27 28 29 30
(8204) M4 256X8 ROM
IRA00+
IRA00-07+ (8 PLC'S)
IMA0-7+ (8 PLC'S)
IRØ00-15+ (16 PLC'S)
8 BIT SHIFT REGISTER K4 (74198)
6.0
(74H04) J1 IRQM- J4 11
ICRY+ 6.4
IND+ 6.2
IEF0+ 6.2
IEF1+ 6.2
IEF2+ 6.2
IEIDLA+
(74H04) J1 J5 23
(74H04) J1 IEIDLE+ 6.1,6.2,6.3
IEIDLE- 6.3,6.5
IEWAIT+ 6.1,6.2,6.3
R22 470
R23 470
+5V
6.2 IIIDLE-
I/Ø
(3001) H5
(74S00) F3
6.2 ID2-
6.1 IINHN+
(74H103) J2
(74H103) J2
(74H103) H2
E1
E2
E3
E4
E5
E6
ICC- 6.1
6.2 IFC+
6.0 IPH1+
ICA- (IUCX) 6.1,6.4
(74H00) B1
6.0 IRQM-
6.2 MAKIØ+
IRELF-
(74S00) F3
6.1 IINHF+
(74S112) H1
IFC+
ICD+ (IUCF) 6.1,6.2,6.3,6.4
* SHOWN IN 990 NS SAMPLE RATE CONFIGURATION
I/O INTERRUPT CLØCK
CODE IDENT NO. 21101
SIZE C
DWG NO W9100401
REV BY
SCALE
SHEET 60 OF

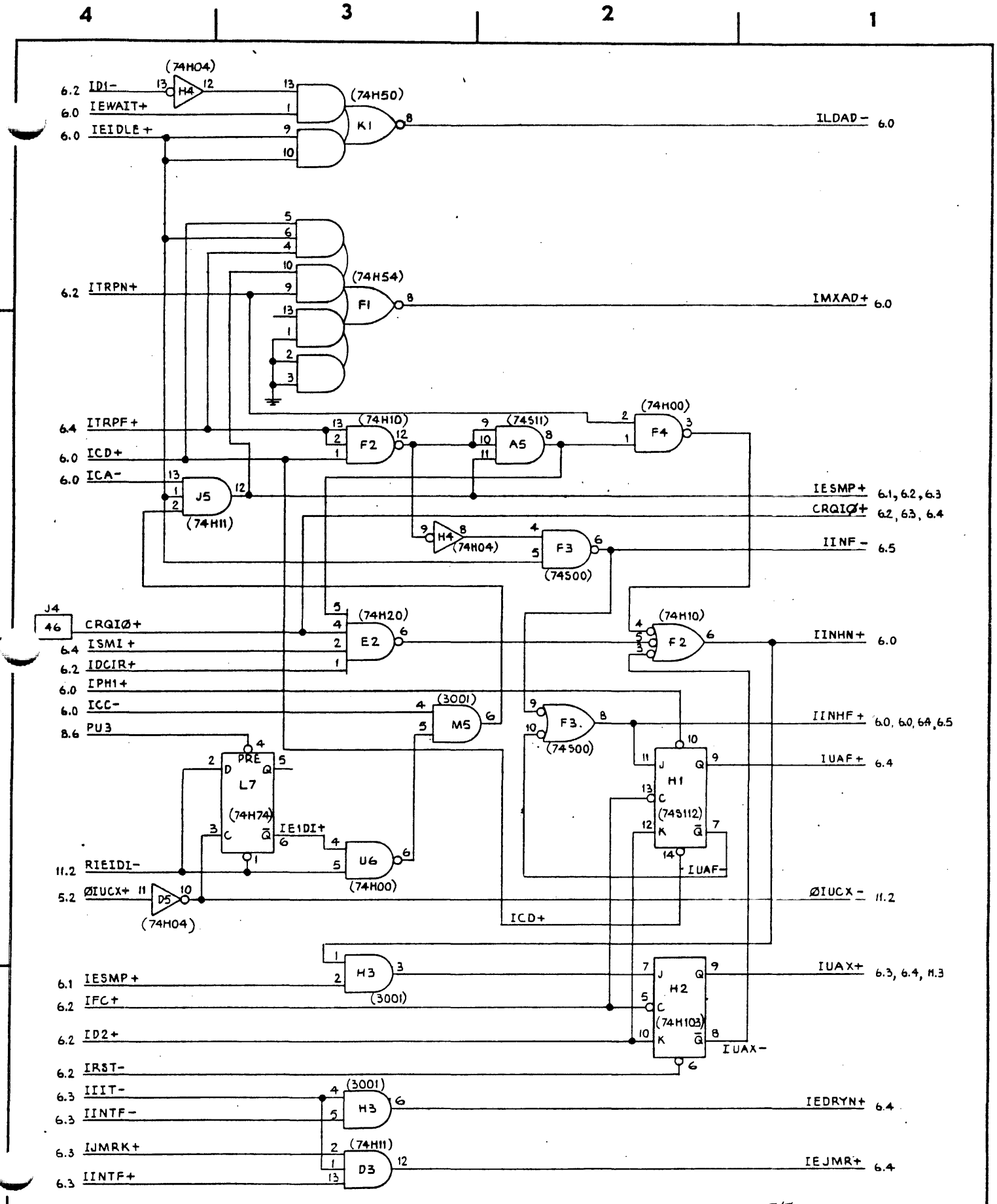
4
3
2
1
(74H04)
6.2 ID1-
6.0 IEWAIT+
6.0 IEIDLE+
H4
K1
(74H50)
ILDAD- 6.0
6.2 ITRPN+
F1
(74H54)
IMXAD+ 6.0
6.4 ITRPF+
6.0 ICD+
6.0 ICA-
F2
(74H10)
A5
(74S11)
F4
(74H00)
J5
(74H11)
IESMP+ 6.1, 6.2, 6.3
CRQIØ+ 6.2, 6.3, 6.4
H4
(74H04)
F3
(74S00)
IINF- 6.5
J4
46
CRQIØ+
6.4 ISMI+
6.2 IDCIR+
6.0 IPH1+
6.0 ICC-
8.6 PU3
E2
(74H20)
F2
(74H10)
IINHN+ 6.0
M5
(3001)
F3.
(74S00)
IINHF+ 6.0, 6.0, 6.4, 6.5
L7
(74H74)
PRE
IE1DI+
H1
(74S112)
IUAF+ 6.4
IUAF-
11.2 RIEIDI-
U6
(74H00)
5.2 ØIUCX+
D5
(74H04)
ØIUCX- 11.2
ICD+
6.1 IESMP+
6.2 IFC+
6.2 ID2+
H3
(3001)
H2
(74H103)
IUAX+ 6.3, 6.4, M.3
IUAX-
6.2 IRST-
6.3 IIIT-
6.3 IINTF-
H3
(3001)
IEDRYN+ 6.4
6.3 IJMRK+
6.3 IINTF+
D3
(74H11)
IEJMR+ 6.4
I/Ø
CODE IDENT NO. 21101
SIZE C
DWG NO W9100401
REV BY
SCALE
SHEET 6.1 OF

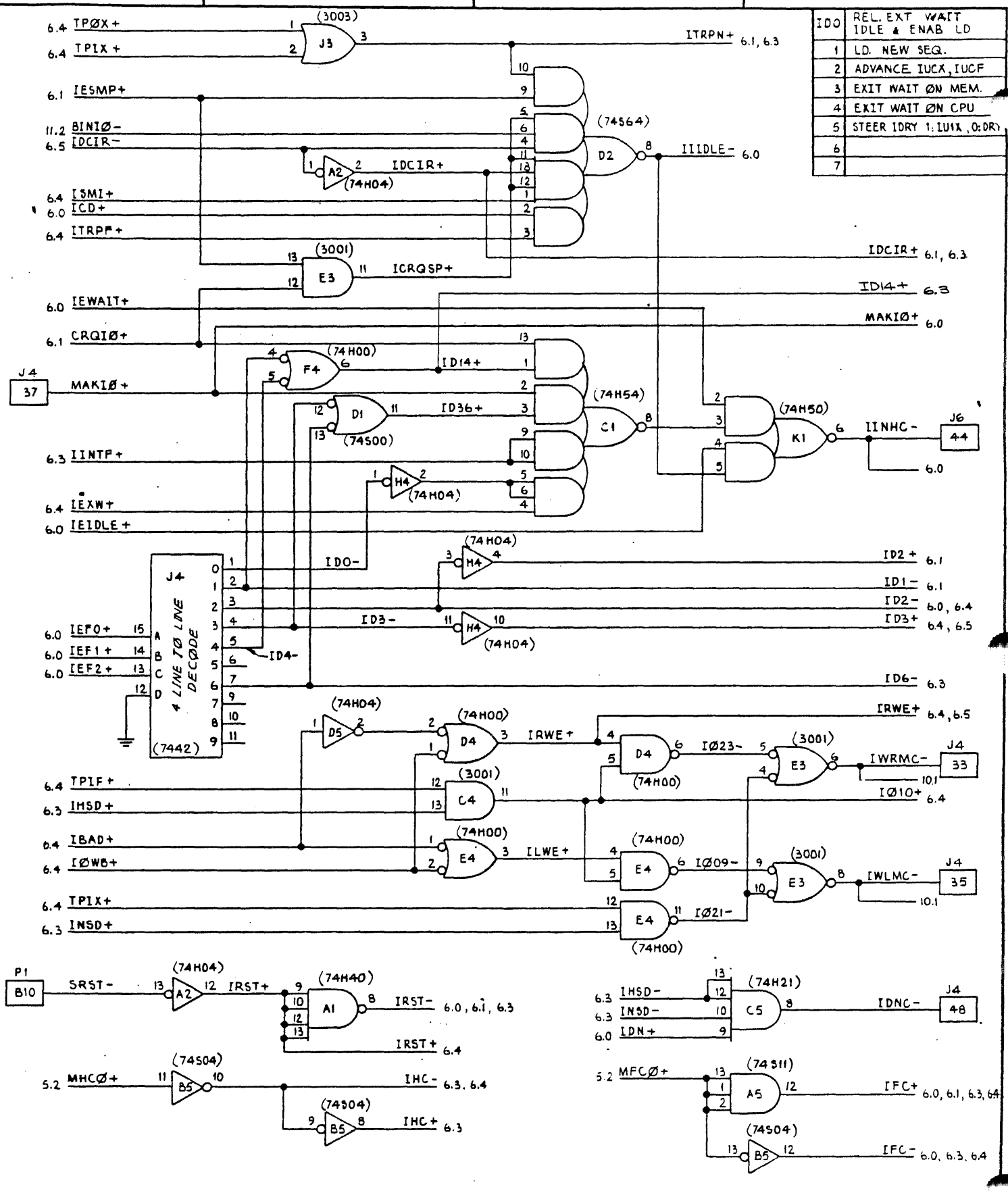

I/Ø

CODE IDENT NO.	SIZE	DWG NO	REV
21101	C	W9100401	BY
SCALE			SHEET 6.2 OF

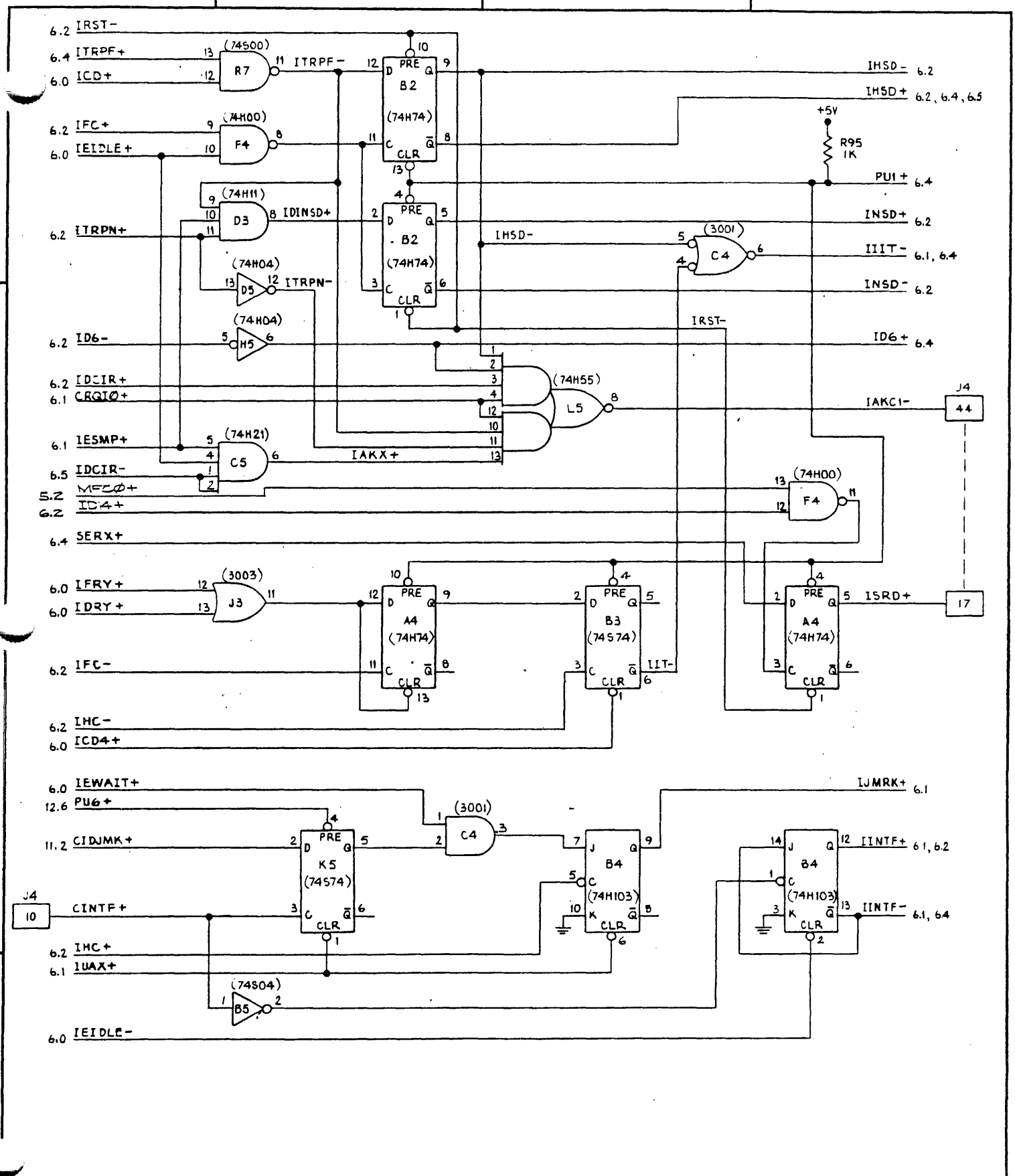

I/Ø

CODE IDENT NO.	SIZE	DWG NO	REV
21101	C	W9100401	BY
SCALE		SHEET 6.3 OF	

8/77 SMETERICH-POST CLEARPRINT 1000H-6

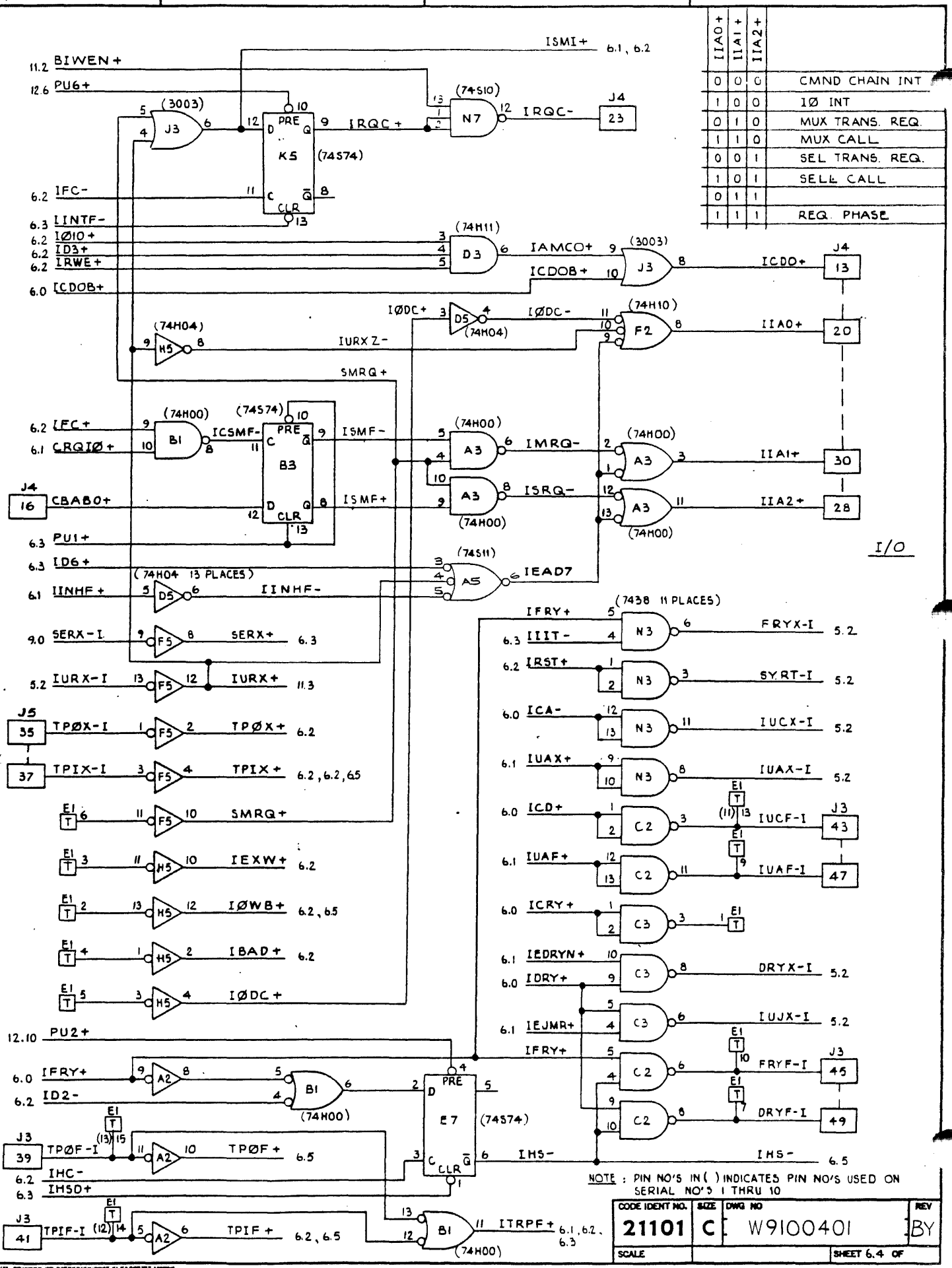
IIA0+ IIA1+ IIA2+
0 0 0 CMND CHAIN INT
1 0 0 IØ INT
0 1 0 MUX TRANS. REQ.
1 1 0 MUX CALL
0 0 1 SEL TRANS. REQ.
1 0 1 SELL CALL
0 1 1
1 1 1 REQ. PHASE
ISMI+ 6.1, 6.2
11.2 BIWEN+
12.6 PU6+
(3003) J3
(74S10) N7
IRQC+
IRQC-
J4 23
K5 (74S74)
6.2 IFC-
6.3 IINTF-
6.2 IØIO+
6.2 ID3+
6.2 IRWE+
6.0 ICDOB+
(74H11) D3
IAMCO+
ICDOB+
(3003) J3
ICDO+
J4 13
IØDC+
D5 (74H04)
IØDC-
(74H10) F2
IIA0+
J4 20
(74H04) H5
IURXZ-
SMRQ+
6.2 IFC+
6.1 CRQIØ+
(74H00) B1
ICSMF-
(74S74) B3
ISMF-
ISMF+
J4 16
CBAB0+
6.3 PU1+
6.3 ID6+
6.1 IINHF+
(74H04 13 PLACES) D5
IINHF-
(74H00) A3
IMRQ-
ISRQ-
(74H00) A3
IIA1+ J4 30
IIA2+ J4 28
I/O
(74S11) A5
IEAD7
9.0 SERX-I
F5
SERX+ 6.3
5.2 IURX-I
IURX+ 11.3
J5 35 TPØX-I
TPØX+ 6.2
37 TPIX-I
TPIX+ 6.2, 6.2, 6.5
E1 T
SMRQ+
IEXW+ 6.2
IØWB+ 6.2, 6.5
IBAD+ 6.2
IØDC+
(7438 11 PLACES) N3
IFRY+
IIIT-
FRYX-I 5.2
IRST+
SYRT-I 5.2
ICA-
IUCX-I 5.2
IUAX+
IUAX-I 5.2
ICD+
C2
IUCF-I J3 43
IUAF+
IUAF-I 47
ICRY+
C3
IEDRYN+
DRYX-I 5.2
IDRY+
IEJMR+
IUJX-I 5.2
FRYF-I J3 45
DRYF-I 49
12.10 PU2+
6.0 IFRY+
6.2 ID2-
A2 B1 (74H00)
E7 (74S74)
J3 39 TPØF-I
TPØF+ 6.5
6.2 IHC-
6.3 IHSD+
IHS- 6.5
J3 41 TPIF-I
TPIF+ 6.2, 6.5
ITRPF+ 6.1, 6.2, 6.3
NOTE : PIN NO'S IN ( ) INDICATES PIN NO'S USED ON SERIAL NO'S 1 THRU 10
CODE IDENT NO. 21101
SIZE C
DWG NO W9100401
REV BY
SCALE
SHEET 6.4 OF

SEQ	0	1	2	3	4	5	6	7	
TPØX	0	0	0	0	0	0	1	1	0-13
TPIX	0	1	1	1	0	0	1	1	14-27
TPØF	0	0	1	1	1	0	1	1	28-35
TPIF	0	0	1	0	0	1	1	1	36-43
TPØFB	0	0	1	1	0	1	1	1	44-53
TPIFB	0	1	1	0	1	1	1	1	54-63

67

11	DMA
01	SMRQ IURX
10	PRØG
00	PRØG

255 0

6.1 IINF-
6.4 TPIX+
6.4 TPIF+
6.1 IINHF+
6.4 IØWB+
6.0 CBMT+
6.0 CBMR+
6.0 ICD2B+
6.4 IHS-
6.0 ICD3B+
6.0 IEIDLE-
6.2 IRWE+
6.4 TPØF+
6.3 IHSD+
6.2 ID3+

(74S00) K2 (74S00) K2 → IXRSA4+ 6.0
(3001) E3 → IXRSA3+ 6.0
(74S00) D1 → IDCIR- 6.2,6.3
(74S00) D1 (74S00) D1 → ICD2+ → J4 5
(74S00) K2 (74S10) E5 → ICD3+ → J4 3
(74H04) D5 → IRWE-
(74H20) E2

I/Ø

BMRQY- → BMRQY- 11.3

P1 A40 MRMTA- B50
A24 B24 C24
B51 MRQPTA-
A39 MRQTA-
B39 MRQTB-
B48
B40 MRMTB- A25 B25 C25
MRQPTB- B49
12.10 MRQTA-

+5V R24 1K
+5V R25 7.5K
C1 1.0 mf.
+5V R26 7.5K
C2 1.0 mf.

F14 2.3 MS ONE-SHOT (74123)
F14 2.3 MS ONE-SHOT (74123)
(74S04) K6
(74S04) K6

MPUP+
E14 (74H74) PRE CLR
E14 (74H74) PRE CLR
(7438) H14 → YDNMA- (PØRT A) → P1 A42 Q
(7438) H14 → YDNMB- (PØRT B) → P1 B42 Q
A26 B26 C26
YDNM- 10.1
MPUP+ 10.0
12.6

MEMORY TIME-OUT

CODE IDENT NO.	SIZE	DWG NO	REV
21101	C	W9100401	BY
SCALE		SHEET 6.5 OF	

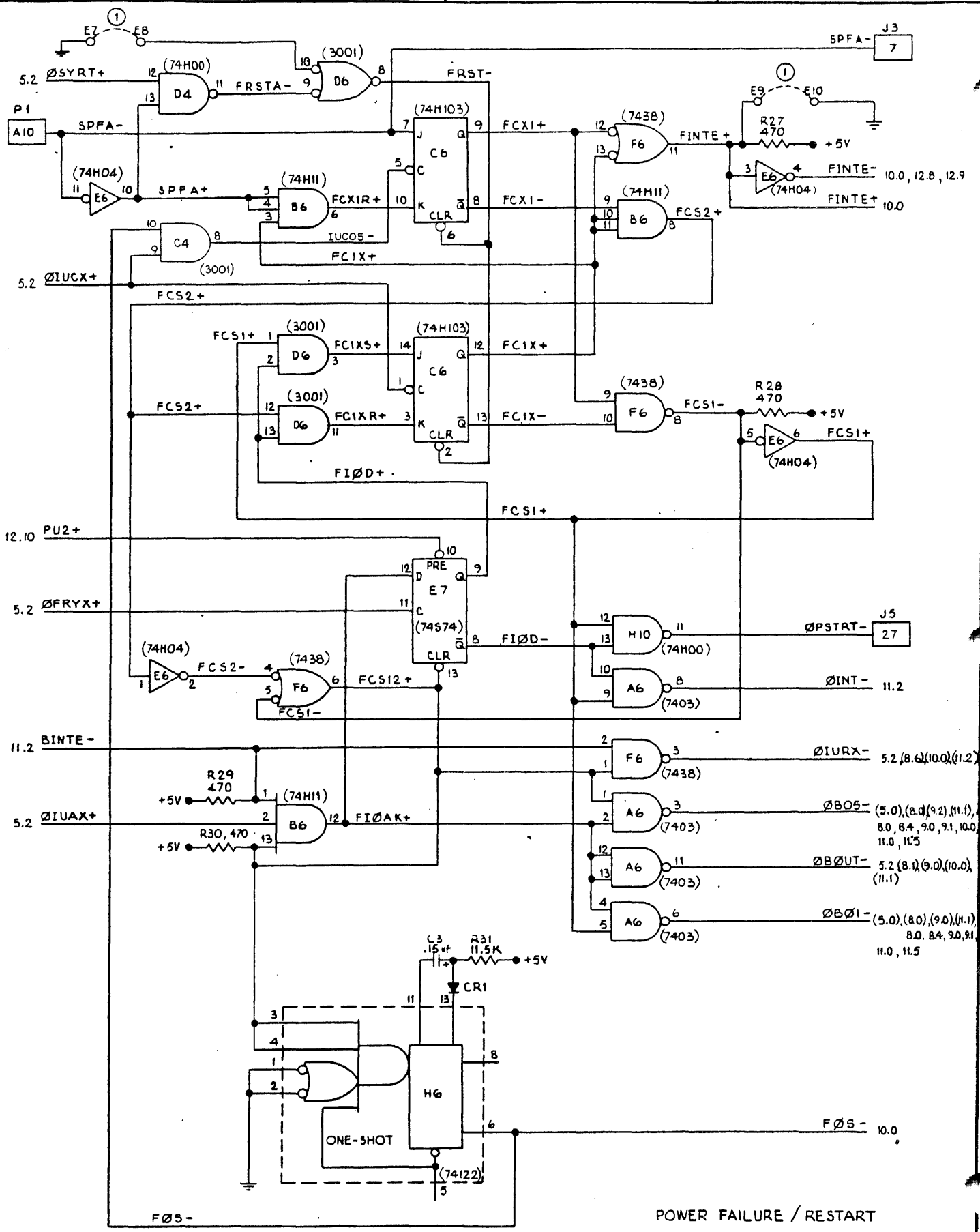

2. (X.X) = SØURCE SHEET

NOTE : (1). JUMPER DISABLES ØPTIØN

POWER FAILURE / RESTART

CODE IDENT NO.	SIZE	DWG NO	REV
21101	C	W9100401	BY
SCALE —			SHEET 7.0 OF

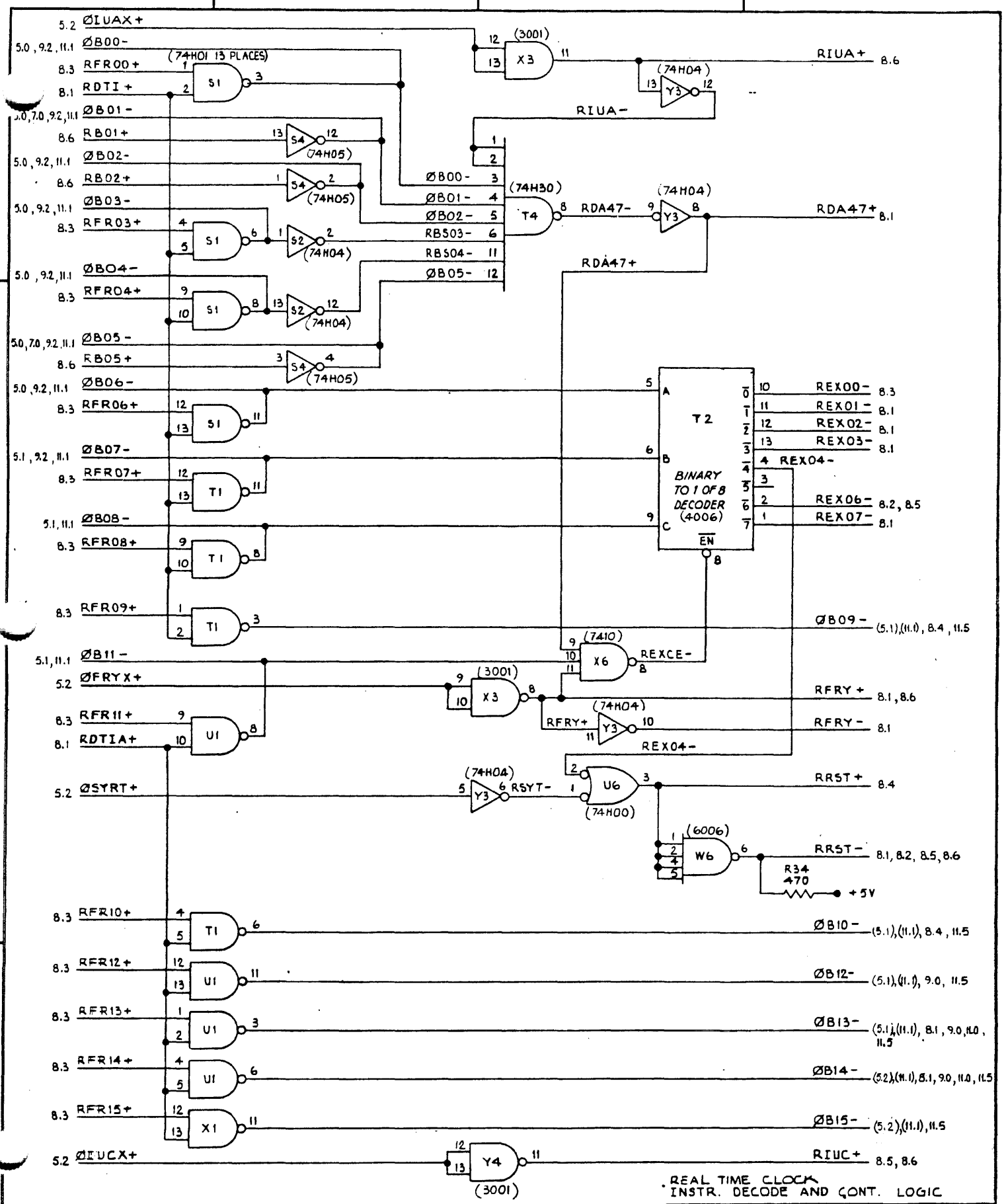
4
3
2
1
5.2 ØIUAX+
5.0, 9.2, 11.1 ØB00-
8.3 RFR00+
8.1 RDTI+
(74H01 13 PLACES)
S1
5.0, 7.0, 9.2, 11.1 ØB01-
8.6 RB01+
S4
(74H05)
5.0, 9.2, 11.1 ØB02-
8.6 RB02+
5.0, 9.2, 11.1 ØB03-
8.3 RFR03+
S2
(74H04)
5.0, 9.2, 11.1 ØB04-
8.3 RFR04+
5.0, 7.0, 9.2, 11.1 ØB05-
8.6 RB05+
5.0, 9.2, 11.1 ØB06-
8.3 RFR06+
5.1, 9.2, 11.1 ØB07-
8.3 RFR07+
T1
5.1, 11.1 ØB08-
8.3 RFR08+
8.3 RFR09+
5.1, 11.1 ØB11-
5.2 ØFRYX+
8.3 RFR11+
8.1 RDTIA+
U1
5.2 ØSYRT+
8.3 RFR10+
8.3 RFR12+
8.3 RFR13+
8.3 RFR14+
8.3 RFR15+
X1
5.2 ØIUCX+
Y4
(3001)
X3
RIUA+ 8.6
(74H04)
Y3
RIUA-
(74H30)
T4
ØB00-
ØB01-
ØB02-
RBS03-
RBS04-
ØB05-
RDA47- 9
RDA47+ 8.1
RDA47+
T2
BINARY TO 1 OF 8 DECODER (4006)
EN
REX00- 8.3
REX01- 8.1
REX02- 8.1
REX03- 8.1
REX04-
REX06- 8.2, 8.5
REX07- 8.1
ØB09- (5.1), (11.1), 8.4, 11.5
(7410)
X6
REXCE-
RFRY+ 8.1, 8.6
RFRY-
RFRY+
REX04-
RSYT-
U6
(74H00)
RRST+ 8.4
(6006)
W6
RRST- 8.1, 8.2, 8.5, 8.6
R34
470
+5V
ØB10- (5.1), (11.1), 8.4, 11.5
ØB12- (5.1), (11.1), 9.0, 11.5
ØB13- (5.1), (11.1), 8.1, 9.0, 11.0, 11.5
ØB14- (5.2), (11.1), 8.1, 9.0, 11.0, 11.5
ØB15- (5.2), (11.1), 11.5
RIUC+ 8.5, 8.6
REAL TIME CLOCK
INSTR. DECODE AND CONT. LOGIC
1. (X.X) = SOURCE SHEET
CODE IDENT NO. 21101
SIZE C
DWG NO W9100401
REV BY
SCALE
SHEET 8.0 OF

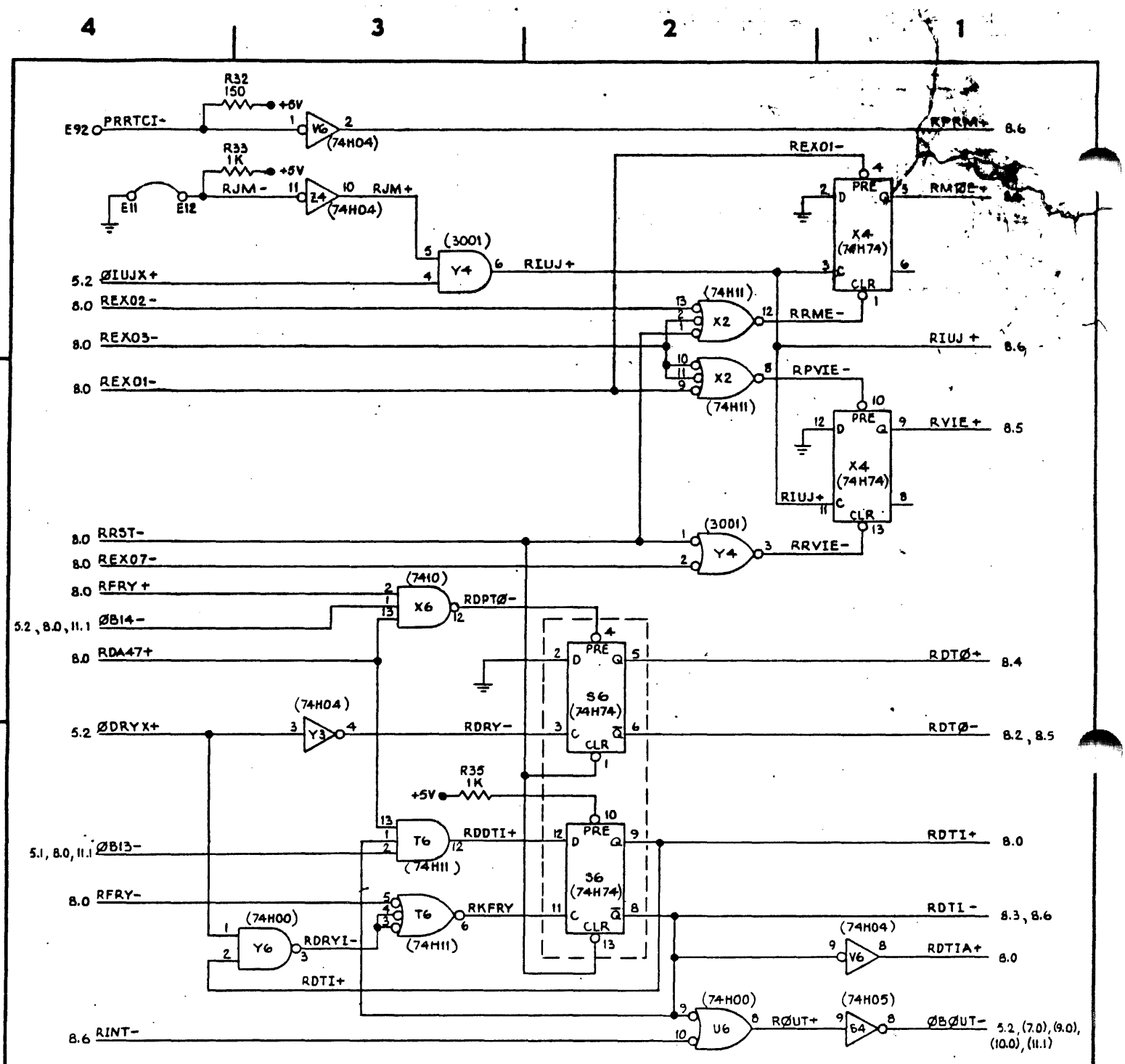

REAL TIME CLØCK
INST DECØDE AND CØNT. LØGIC

CODE IDENT NO.	SIZE	DWG NO	REV
21101	C	W9100401	BY
SCALE			SHEET 8.1 OF

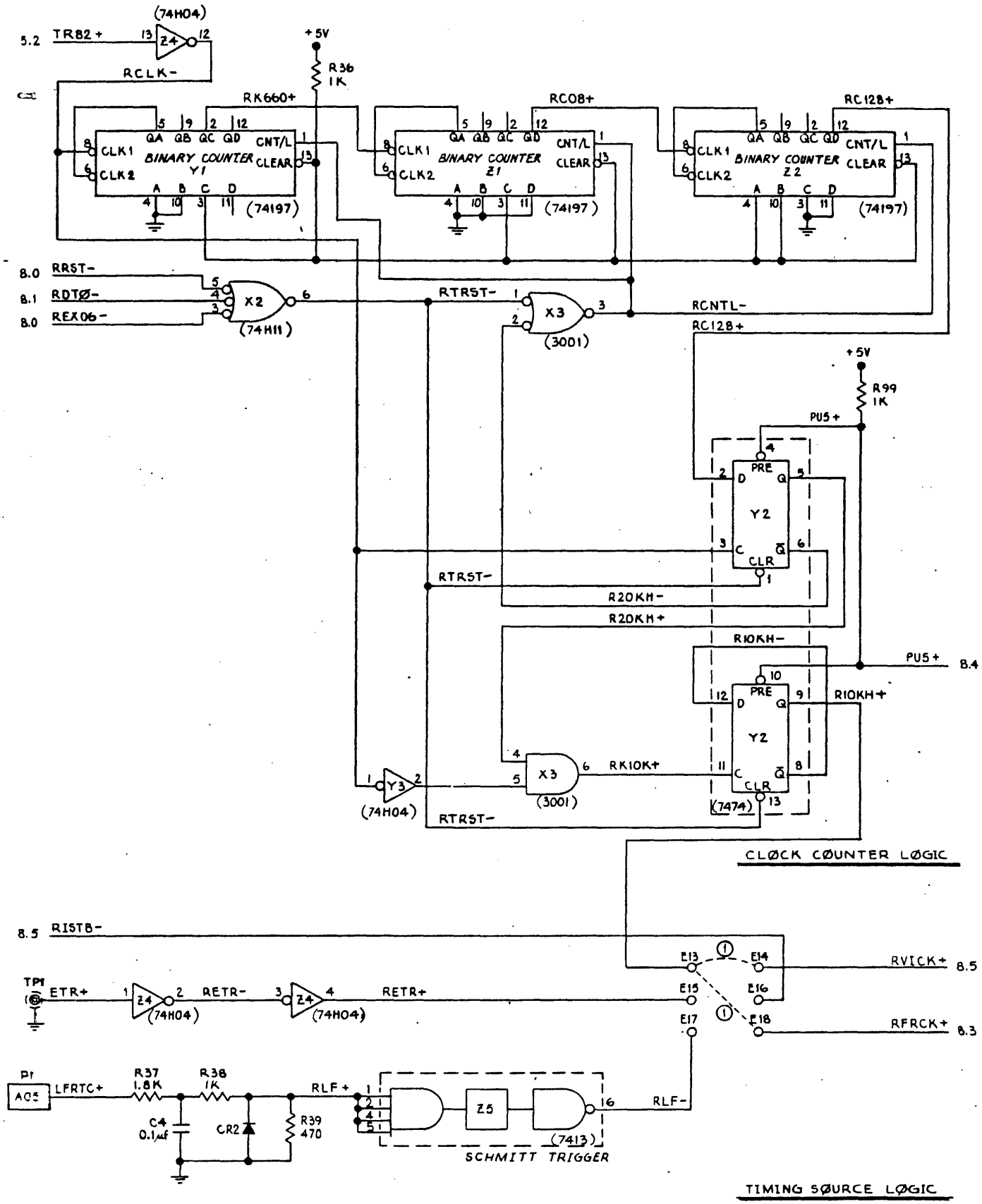

① JUMPERING SHOWN IS FOR STANDARD OPTION (10 KHZ SOURCE FREQ FOR THE VII AND THE FREE RUNNING COUNTER).

REAL TIME CLOCK

CODE IDENT NO.	SIZE	DWG NO	REV
21101	C	W9100401	BY
SCALE			SHEET 8.2 OF

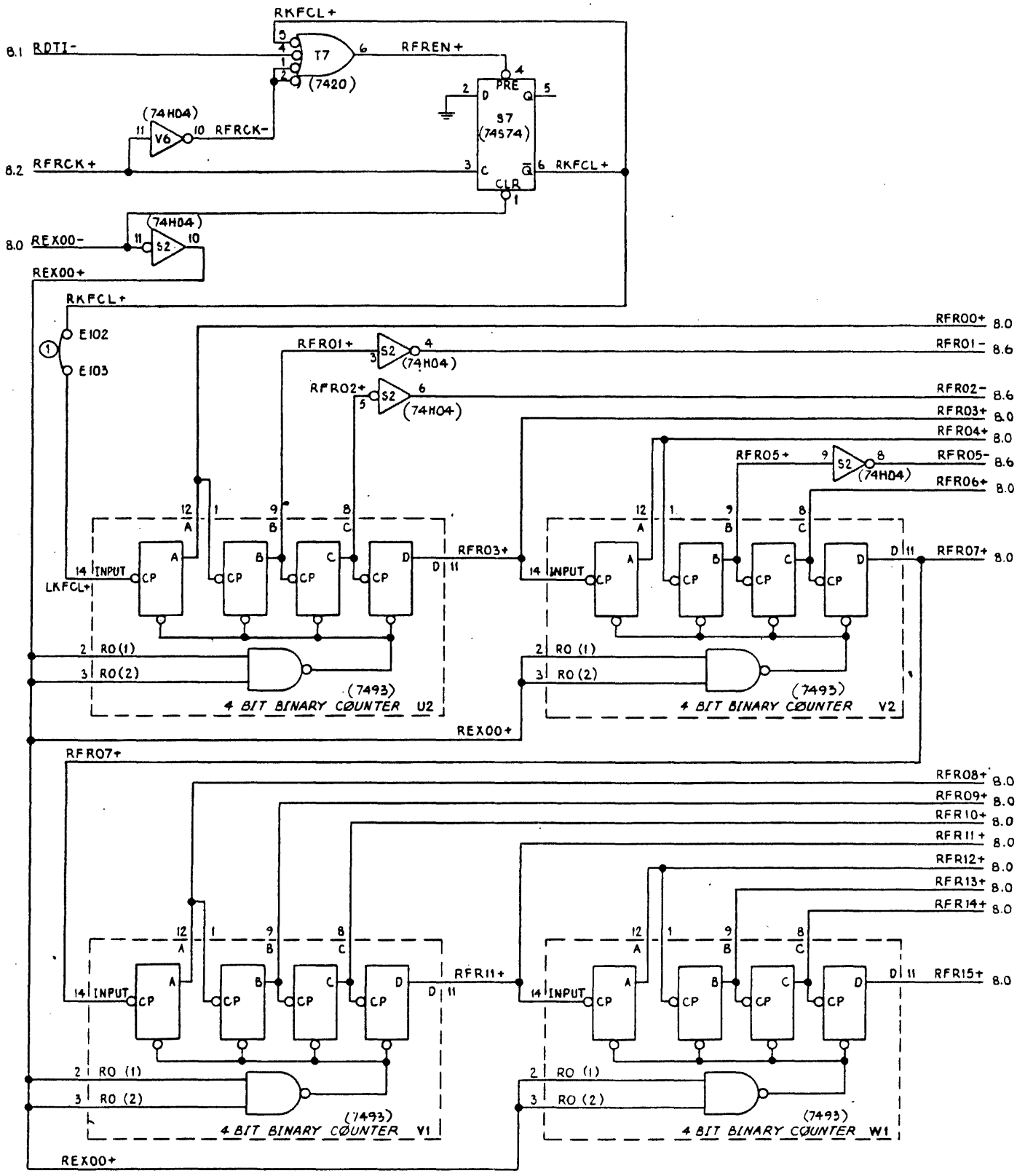

① REMOVE JUMPER ONLY FOR TEST.
(JUMPERS INSTALLED AT ASSY).

REAL TIME CLOCK
FREE RUNNING COUNTER

CODE IDENT NO.	SIZE	DWG NO	REV
21101	C	W9100401	BY
SCALE			SHEET 8.3 OF

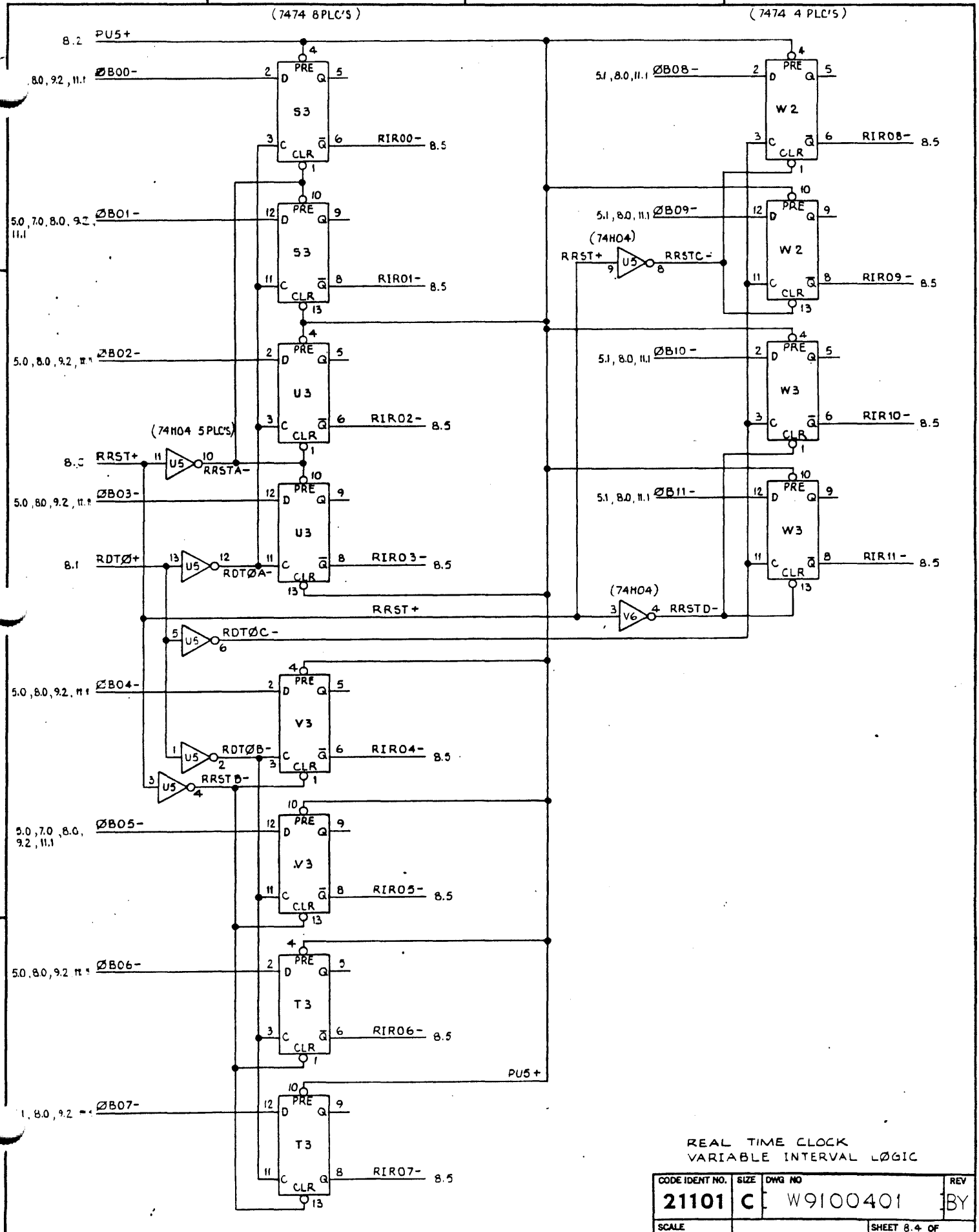
(7474 8PLC'S)
(7474 4 PLC'S)
8.2 PU5+
ØB00-
ØB01-
ØB02-
ØB03-
ØB04-
ØB05-
ØB06-
ØB07-
ØB08-
ØB09-
ØB10-
ØB11-
S3
W2
U3
W3
V3
T3
RIR00- 8.5
RIR01- 8.5
RIR02- 8.5
RIR03- 8.5
RIR04- 8.5
RIR05- 8.5
RIR06- 8.5
RIR07- 8.5
RIR08- 8.5
RIR09- 8.5
RIR10- 8.5
RIR11- 8.5
(74H04 5PLC'S)
RRST+
RRSTA-
RDTØ+
RDTØA-
RDTØC-
RDTØB-
RRSTB-
(74H04)
RRST+
RRSTC-
(74H04)
RRSTD-
PU5+
REAL TIME CLOCK
VARIABLE INTERVAL LØGIC
CODE IDENT NO. 21101
SIZE C
DWG NO W9100401
REV BY
SCALE
SHEET 8.4 OF

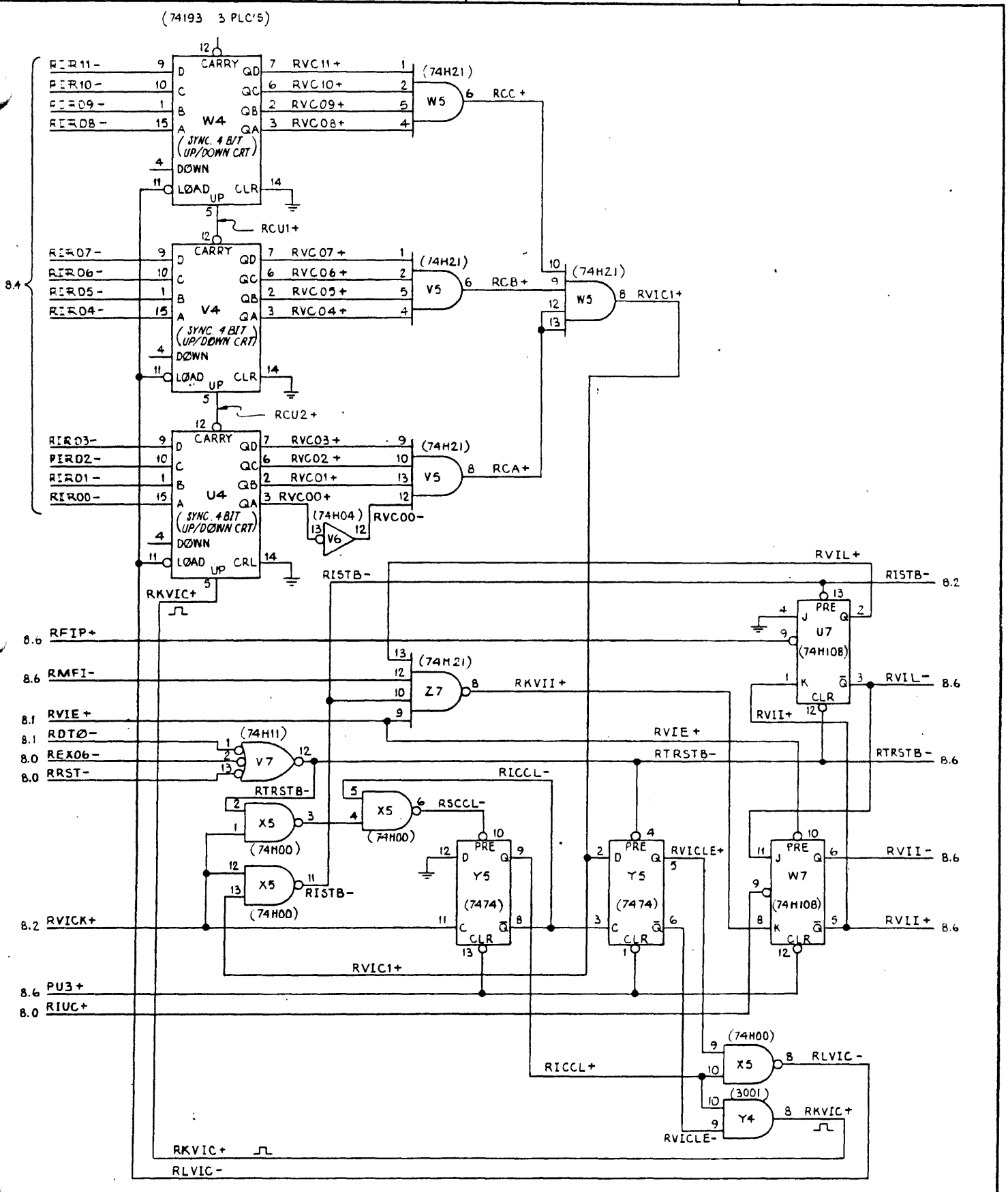

REAL TIME CLOCK
VARIABLE INTERVAL LØGIC

CODE IDENT NO.	SIZE	DWG NO
21101	C	W 9100401
SCALE		SHEET 8.7

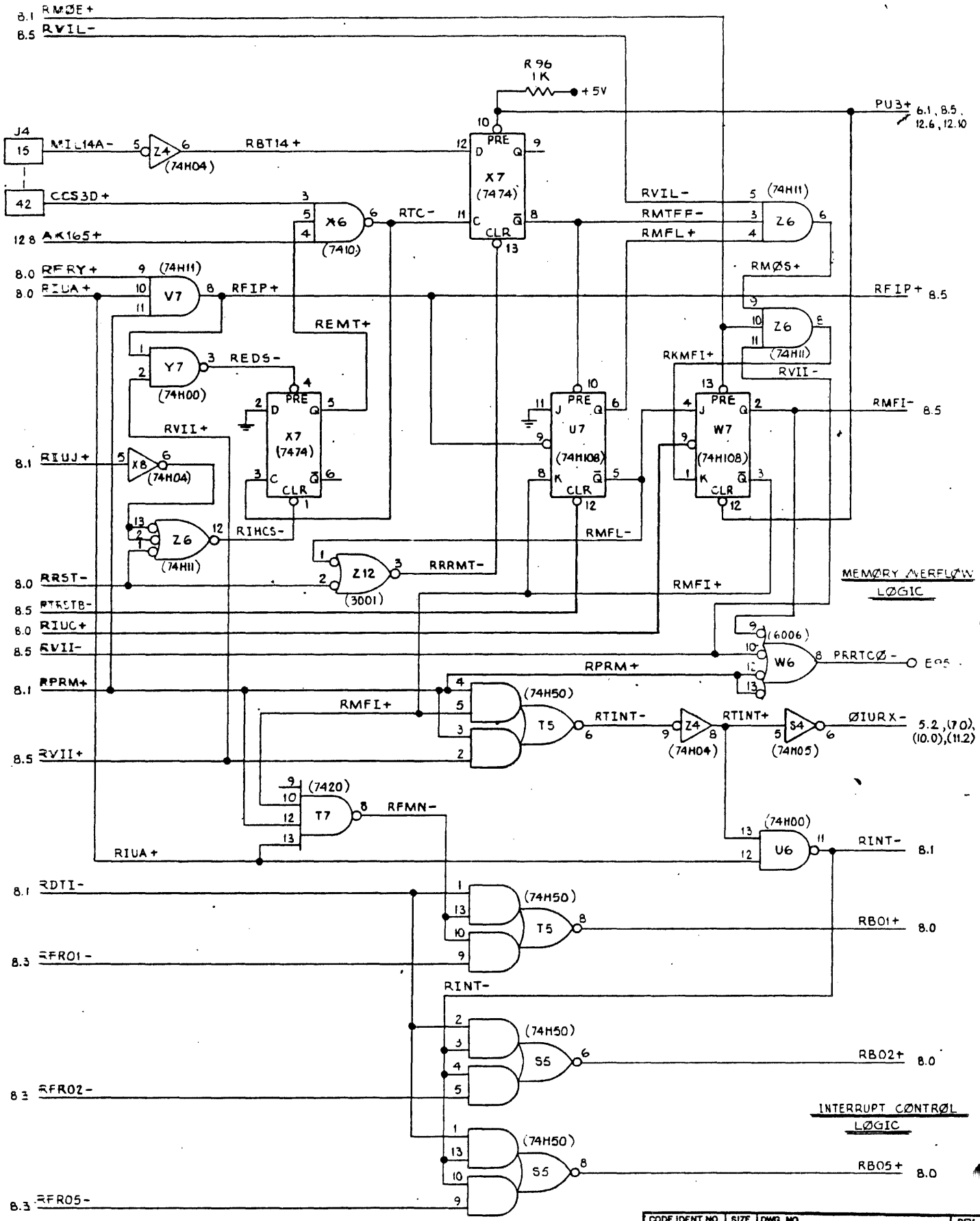
4
3
2
1
8.1 RMØE+
8.5 RVIL-
R96
1K
+5V
PU3+ 6.1, 8.5, 12.6, 12.10
J4
15
MIL14A-
Z4
(74H04)
RBT14+
X7
(7474)
42
CCS3D+
X6
(7410)
RTC-
12 8 AK165+
RVIL-
RMTFF-
RMFL+
Z6
(74H11)
RMØS+
8.0 RFRY+
8.0 RIUA+
V7
RFIP+
RFIP+ 8.5
REMT+
Y7
(74H00)
REDS-
RKMFI+
RVII-
RVII+
X7
(7474)
U7
(74H108)
W7
(74H108)
RMFI-
8.5
8.1 RIUJ+
X8
(74H04)
RIHCS-
RMFL-
Z12
(3001)
RRRMT-
8.0 RRST-
RMFI+
MEMØRY ØVERFLØW LØGIC
8.5 RTRSTB-
8.0 RIUC+
8.5 RVII-
(6006)
W6
PRRTCØ-
RPRM+
8.1 RPRM+
RMFI+
(74H50)
T5
RTINT-
RTINT+
S4
(74H05)
ØIURX-
5.2, (7.0), (10.0), (11.2)
8.5 RVII+
(7420)
T7
RFMN-
(74H00)
U6
RINT-
8.1
RIUA+
8.1 RDTI-
RBØ1+
8.0
8.3 RFRØ1-
RINT-
S5
RBØ2+
8.0
8.3 RFRØ2-
INTERRUPT CØNTRØL LØGIC
RBØ5+
8.0
8.3 RFRØ5-
REAL TIME CLOCK
CODE IDENT NO. 21101
SIZE C
DWG NO W9100401
REV BY
SCALE
SHEET 8.6 OF

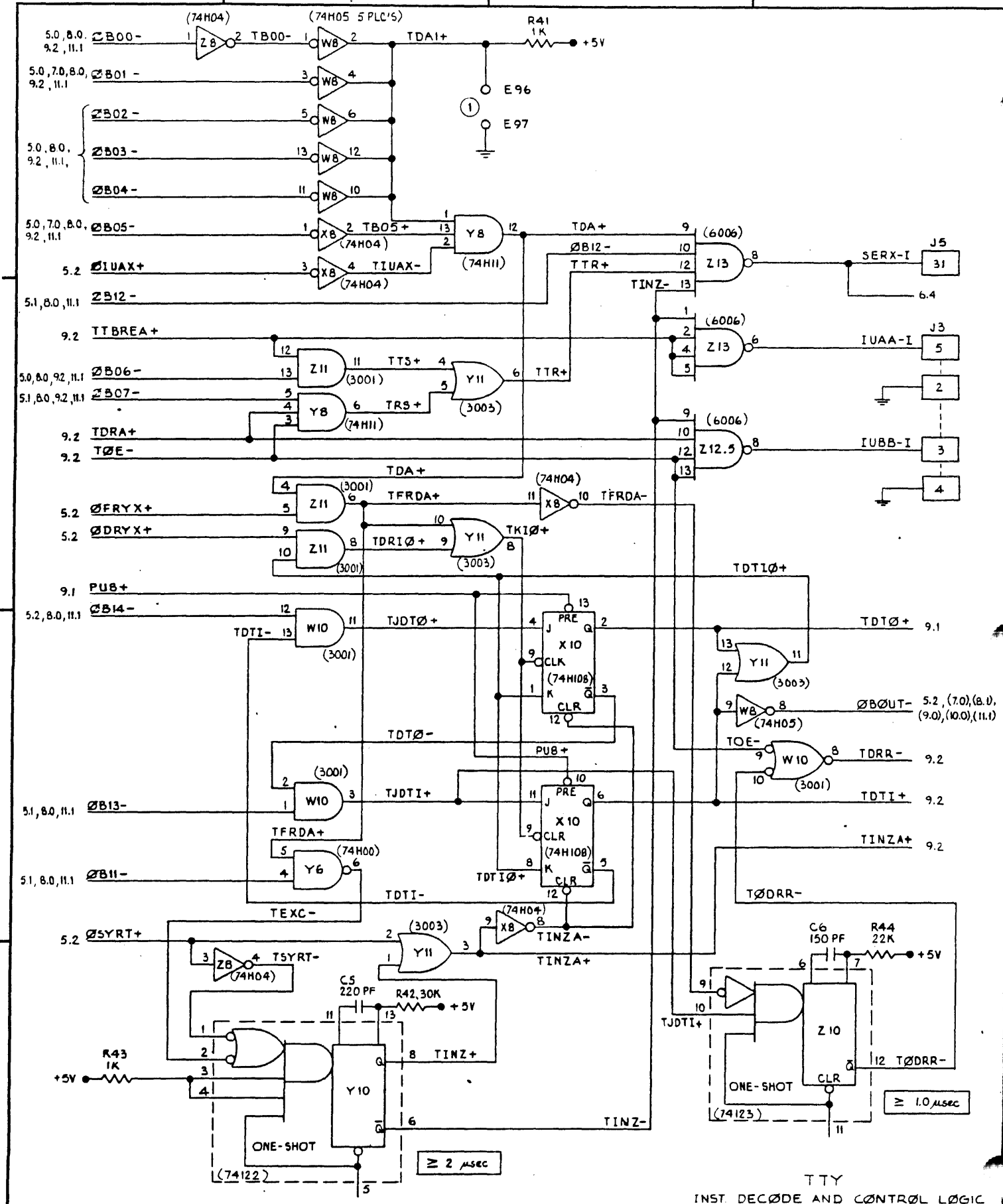

TTY

INST. DECØDE AND CØNTRØL LØGIC

CODE IDENT NO.	SIZE	DWG NO	REV
21101	C	W9100401	BY
SCALE			SHEET 9.0 OF

① INSTALL JUMPER TØ DISABLE ØPTIØN

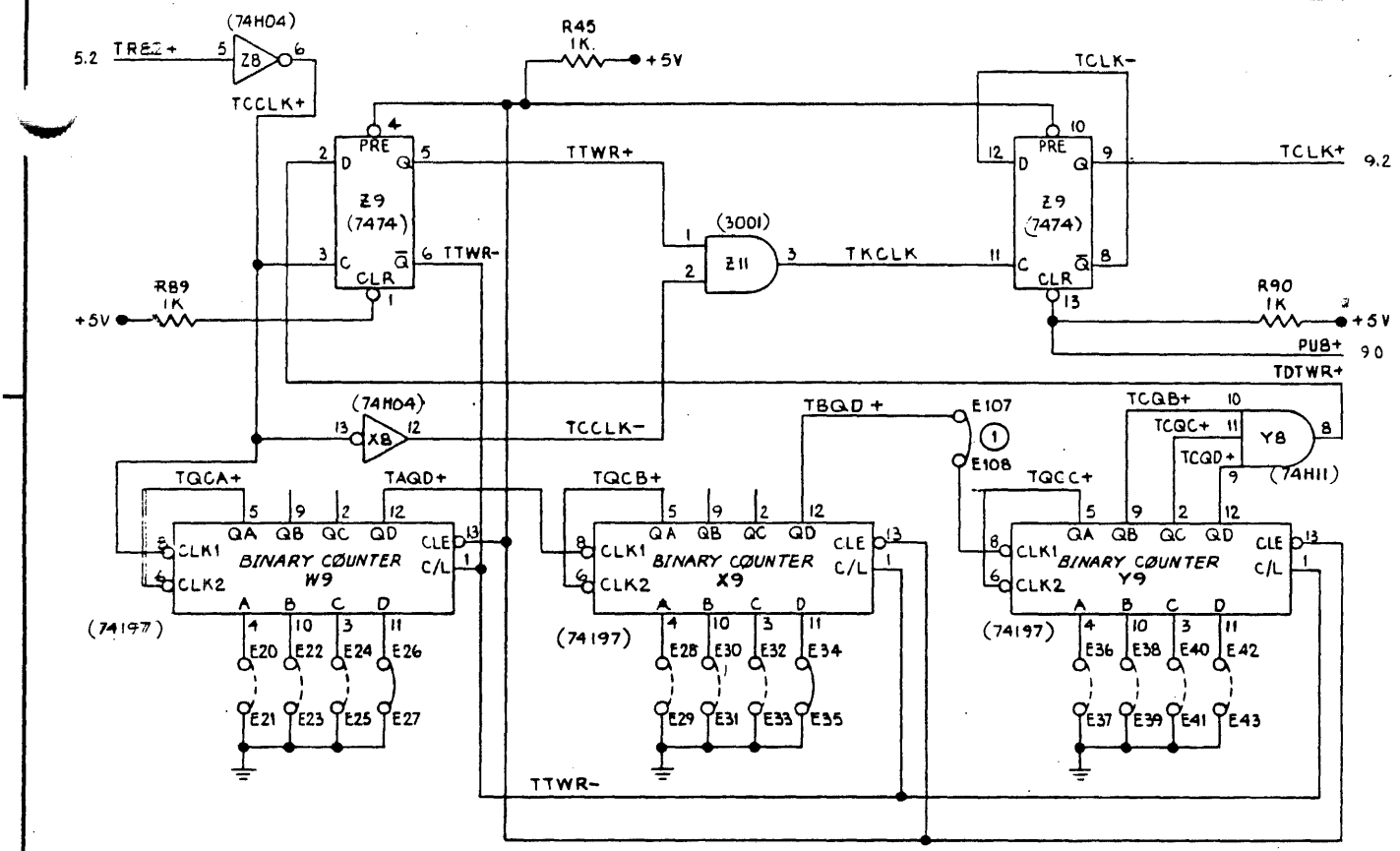

CLØCK CØUNTER LØGIC

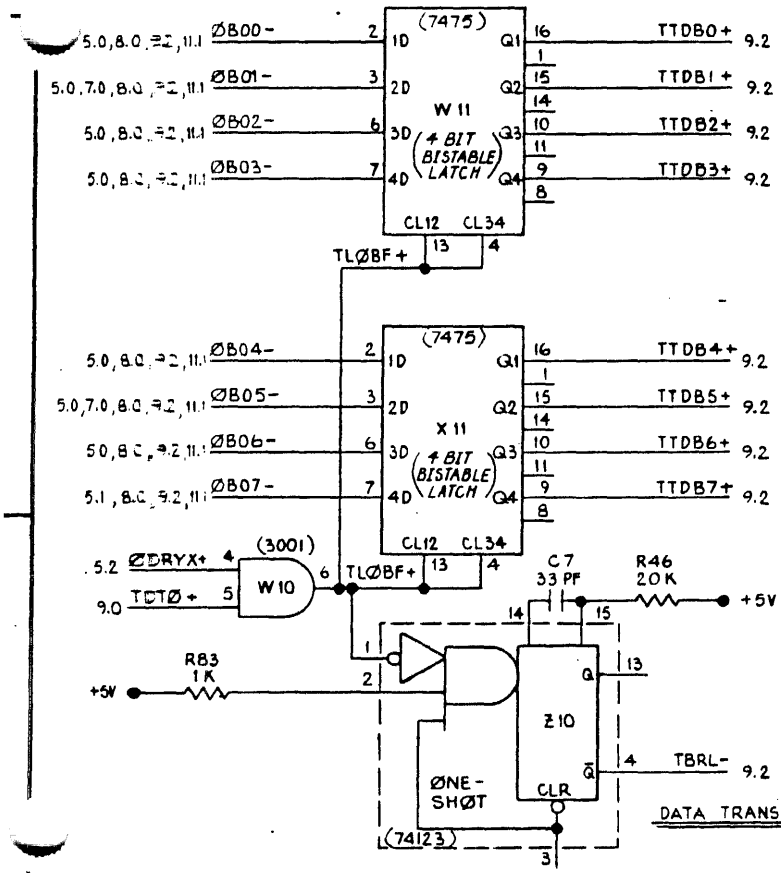

DATA TRANSFER ØUT BUFFER REGISTER

TTY CLØCK JUMPERING FØR STANDARD BAUD RATES

BAUD RATE	E42 TØ E43	E40 TØ E41	E38 TØ E39	E36 TØ E37	E34 TØ E35	E32 TØ E33	E30 TØ E31	E28 TØ E29	E26 TØ E27	E24 TØ E25	E22 TØ E23	E20 TØ E21
110	X	X	X	X		X	X	X		X		X
150	X		X	X	X	X		X	X	X	X	
300		X	X		X	X	X	X				
1200			X	X		X	X	X	X	X		X
2400			X		X			X	X	X		
4800			X			X			X	X	X	
9600			X				X			X	X	

(2)

(2) INSTALL 110 BAUD RATE JUMPERS IN BASIC SYSTEM
(1) REMOVE JUMPER ONLY FOR TEST.
(JUMPER INSTALLED AT ASSY)

TTY

CODE IDENT NO.	SIZE	DWG NO	REV
21101	C	W9100401	BY
SCALE			SHEET 9.1 OF

ASYNCHRONOUS TRANSMITTER / RECEIVER I.C.

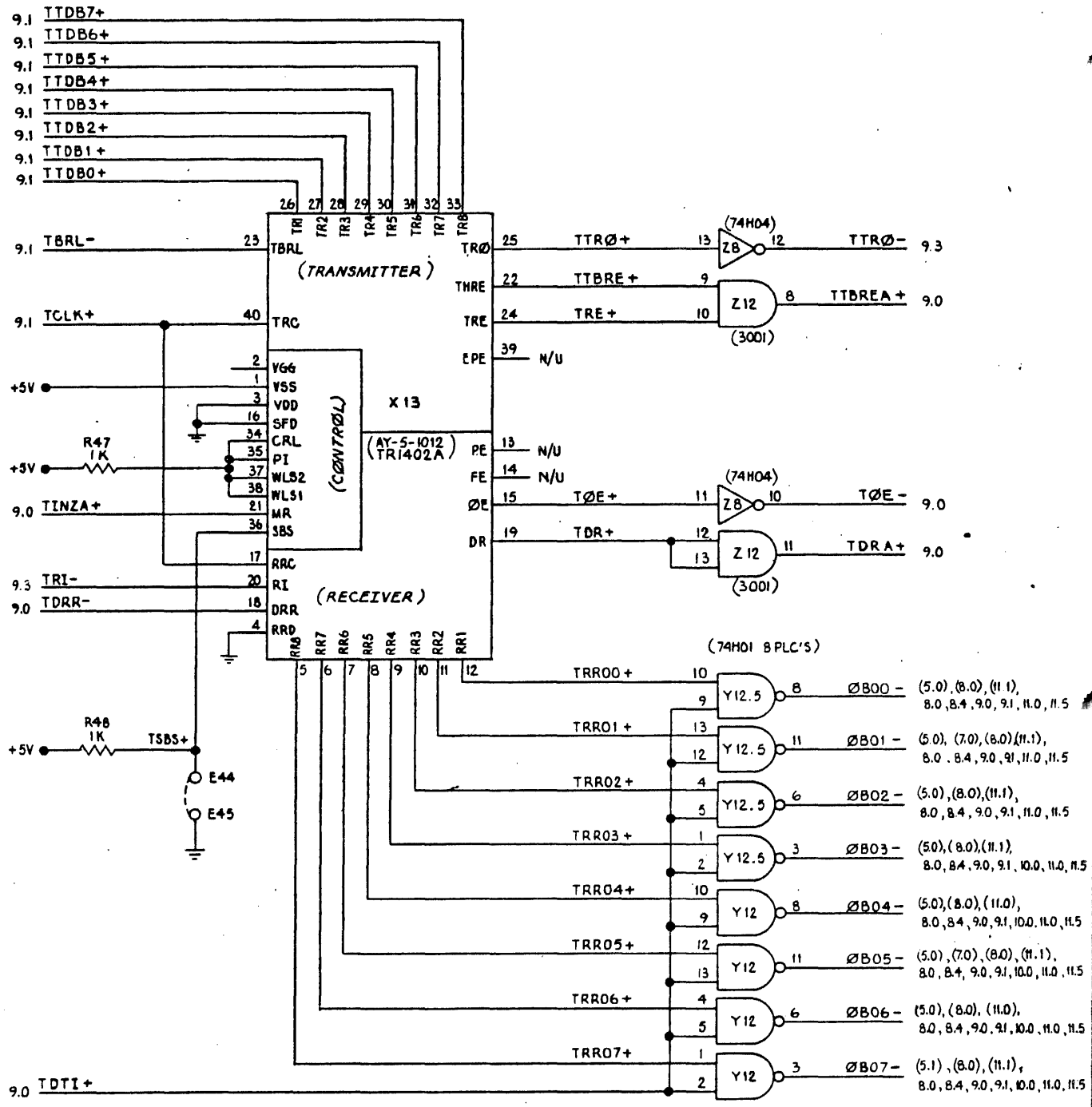

TTY

MØS - TRANSMITTER/RECEIVER LØGIC

NOTE: 1. (X.X) = SOURCE SHEET

CODE IDENT NO.	SIZE	DWG NO	REV
21101	C	W9100401	BY
SCALE			SHEET 9.2 OF

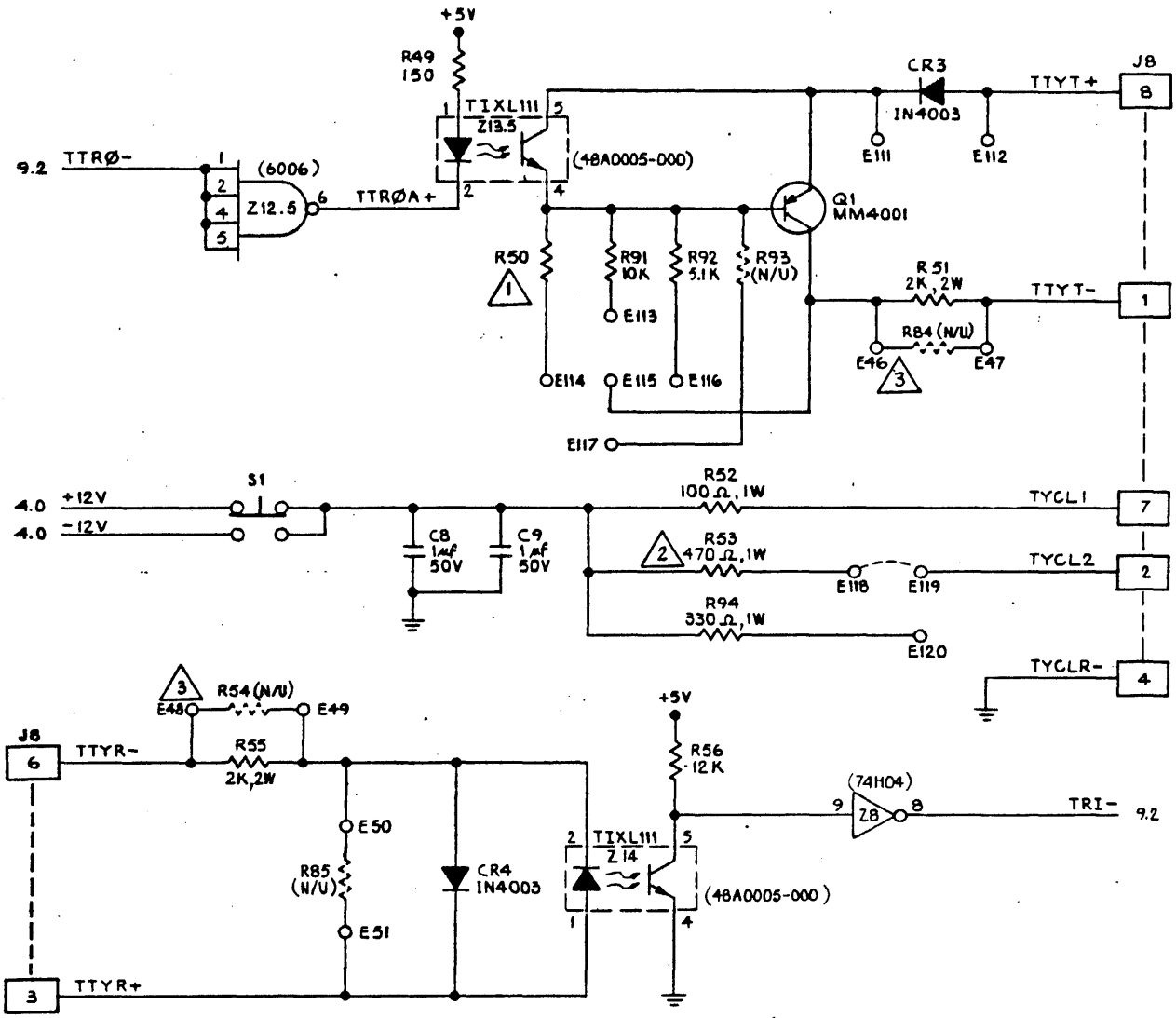

3 FØR -003 E46 IS JUMPERED TØ E47 AND E48 JUMPERED TØ E49

2 FØR -000,-001 AND -002 R53 IS 470Ω, 1W
FØR -003 R53 IS 330Ω, 1W

1 FØR -000,-001 AND -002 R50 IS 51K
FØR -003 R50 IS 10K

TTY
TELETYPE INTERFACE BLØCK

CODE IDENT NO.	SIZE	DWG NO	REV
21101	C	W9100401	BY
SCALE			SHEET 9.3 OF

6/77 DIETZGEN-FUST CLEARPRINT

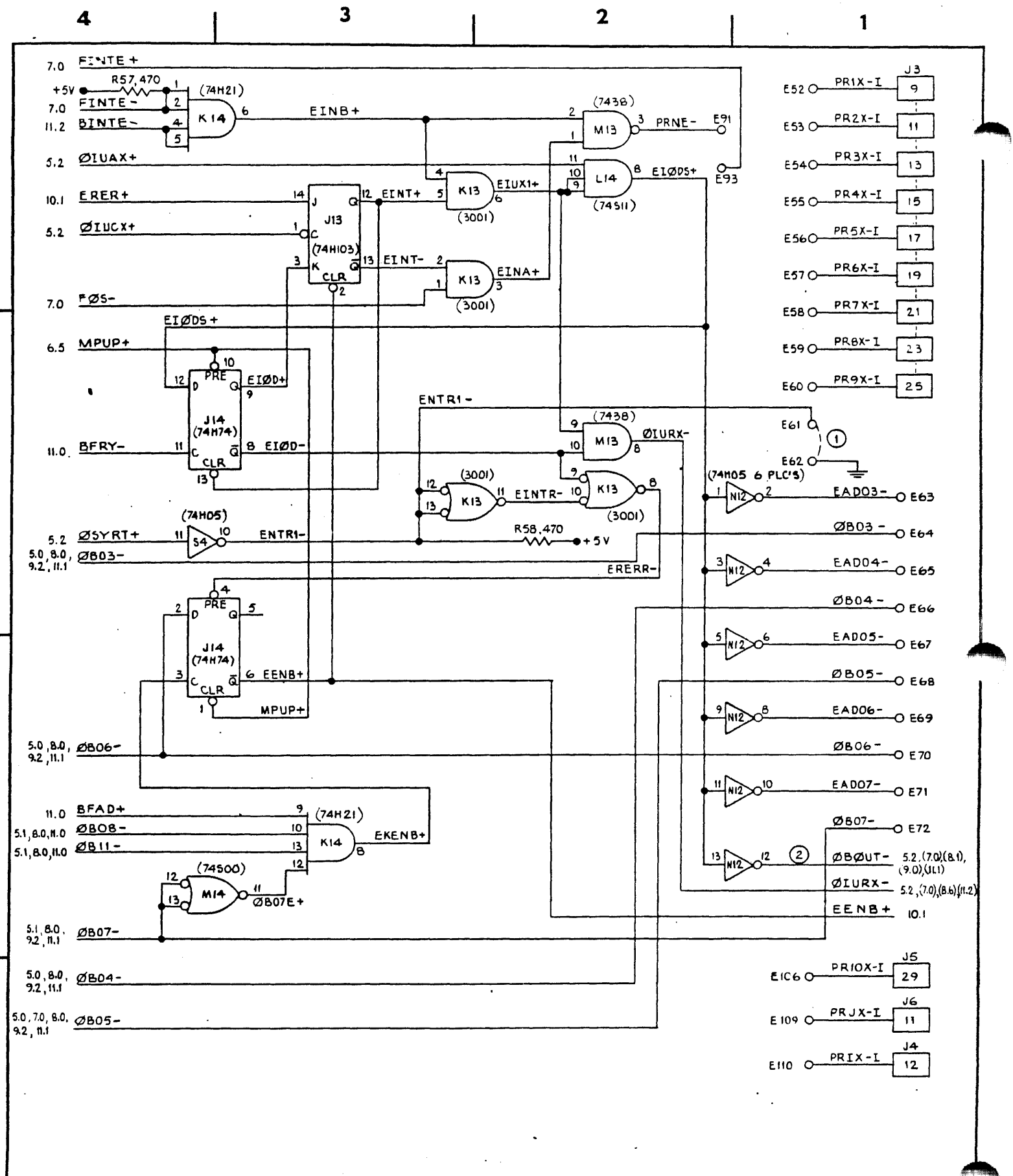

(2) INTERRUPT ADDRESS PATCHES

(1) JUMPERING E61 TØ E62 DISABLE PARIRY ØPTIØN

PARITY

PARITY DEV. ADD & INTERRUPT

CODE IDENT NO.	SIZE	DWG NO	REV
21101	C	W9100401	BY
SCALE			SHEET 10.0 OF

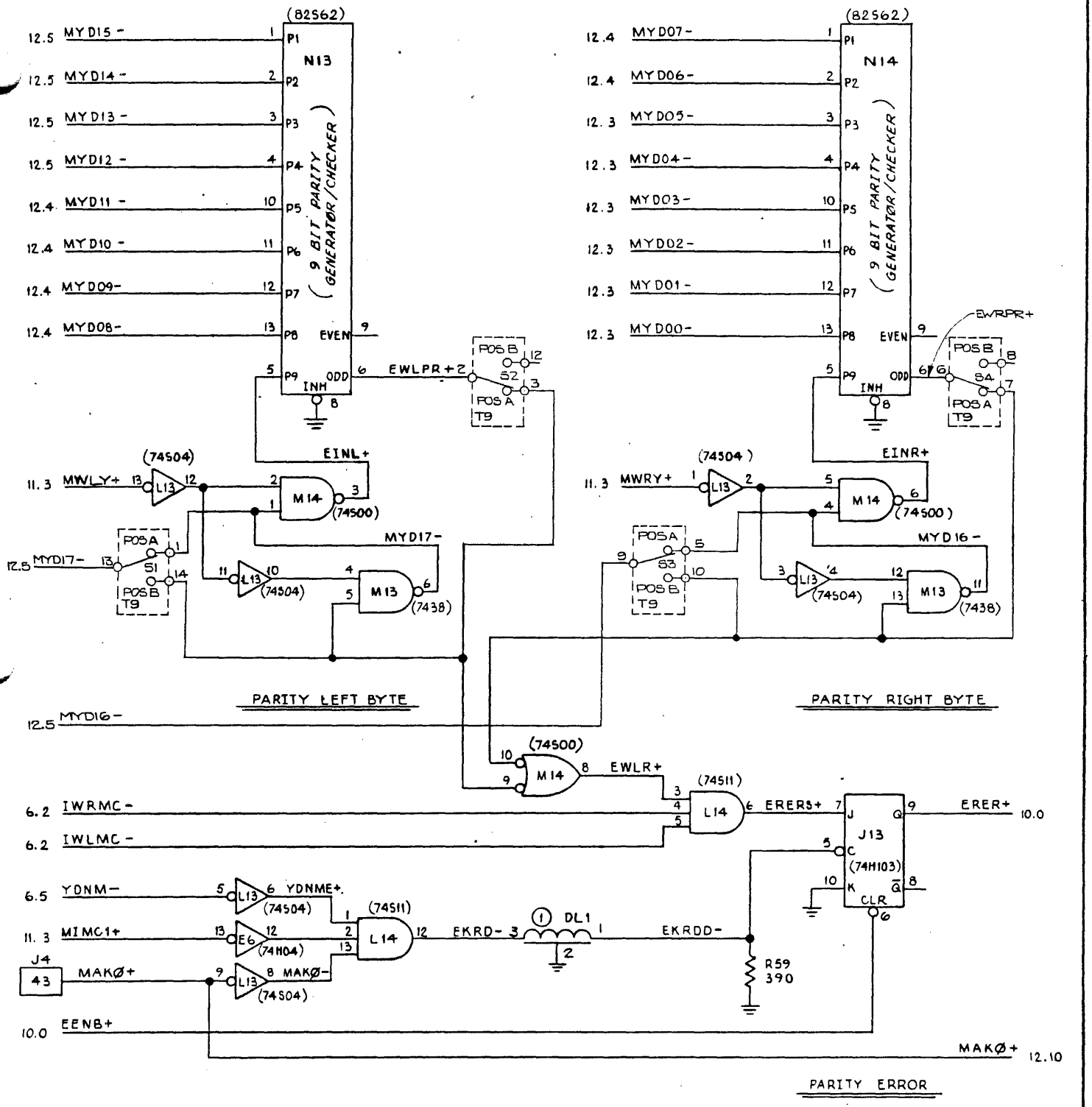

NOTE: SWITCH T9 SHOWN IN NON ERROR CORRECT POSITION.

PARITY

① P/N 80A1000-004 30 n.s. DELAY LINE

CODE IDENT NO.	SIZE	DWG NO	REV
21101	C	W9100401	BY
SCALE		SHEET 10.1 OF	

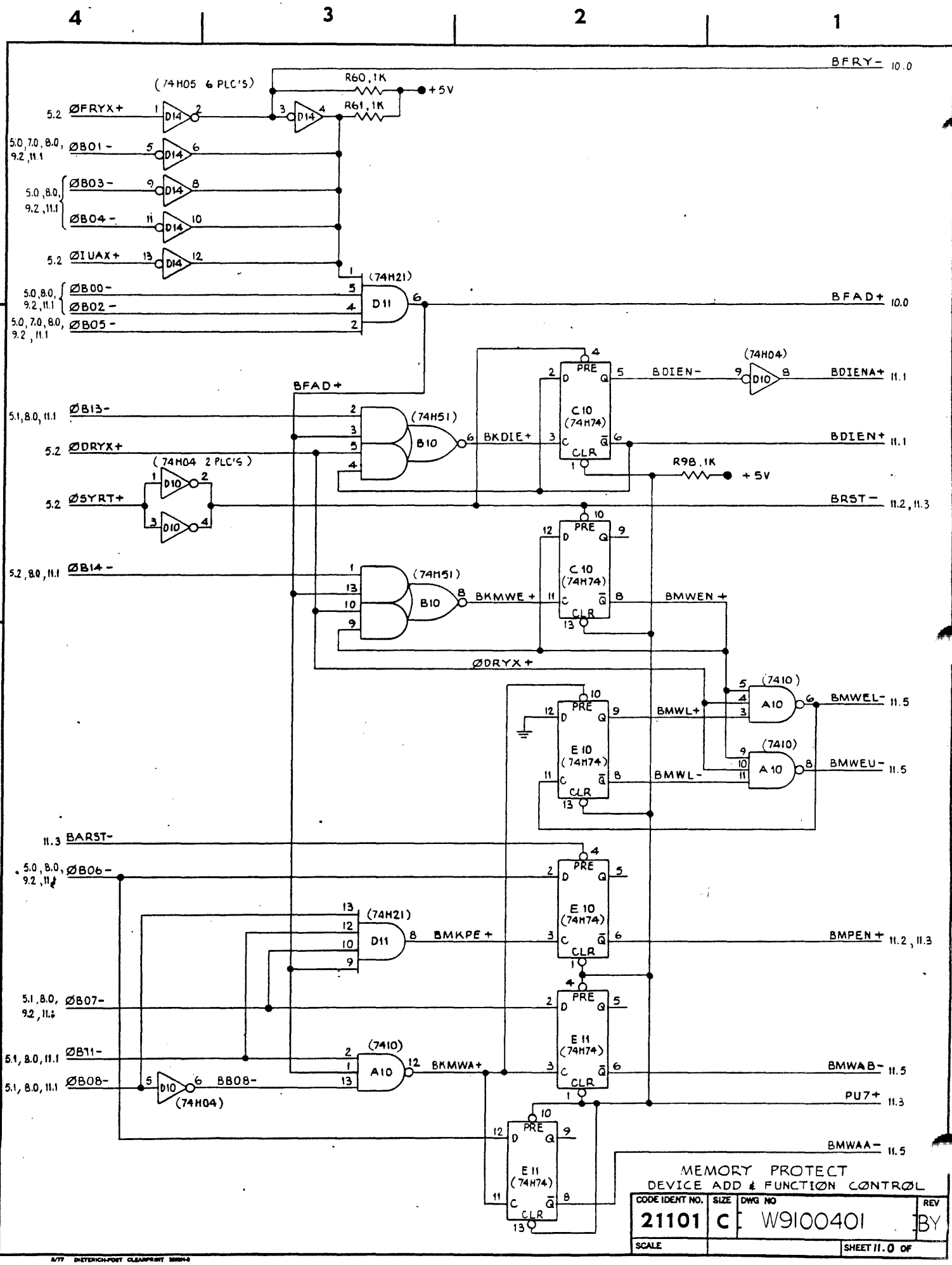
4
3
2
1
BFRY- 10.0
(74H05 6 PLC'S)
R60, 1K
+5V
R61, 1K
5.2 ØFRYX+
D14
5.0, 7.0, 8.0, 9.2, 11.1 ØB01-
5.0, 8.0, 9.2, 11.1 ØB03-
ØB04-
5.2 ØIUAX+
(74H21)
D11
5.0, 8.0, 9.2, 11.1 ØB00-
ØB02-
5.0, 7.0, 8.0, 9.2, 11.1 ØB05-
BFAD+ 10.0
BFAD+
(74H04)
D10
BDIEN- BDIENA+ 11.1
5.1, 8.0, 11.1 ØB13-
(74H51)
B10
C10 (74H74)
PRE
CLR
BKDIE+
BDIEN+ 11.1
5.2 ØDRYX+
(74H04 2 PLC'S)
R98, 1K
+5V
5.2 ØSYRT+
BRST- 11.2, 11.3
5.2, 8.0, 11.1 ØB14-
BKMWE+
BMWEN+
ØDRYX+
(7410)
A10
BMWL+ BMWEL- 11.5
E10 (74H74)
BMWL-
BMWEU- 11.5
11.3 BARST-
5.0, 8.0, 9.2, 11.1 ØB06-
(74H21)
D11
BMKPE+
BMPEN+ 11.2, 11.3
5.1, 8.0, 9.2, 11.1 ØB07-
E11 (74H74)
5.1, 8.0, 11.1 ØB11-
5.1, 8.0, 11.1 ØB08-
BB08-
(74H04)
BKMWA+
BMWAB- 11.5
PU7+ 11.3
BMWAA- 11.5
MEMORY PROTECT
DEVICE ADD & FUNCTION CONTROL
CODE IDENT NO. 21101
SIZE C
DWG NO W9100401
REV BY
SCALE
SHEET 11.0 OF

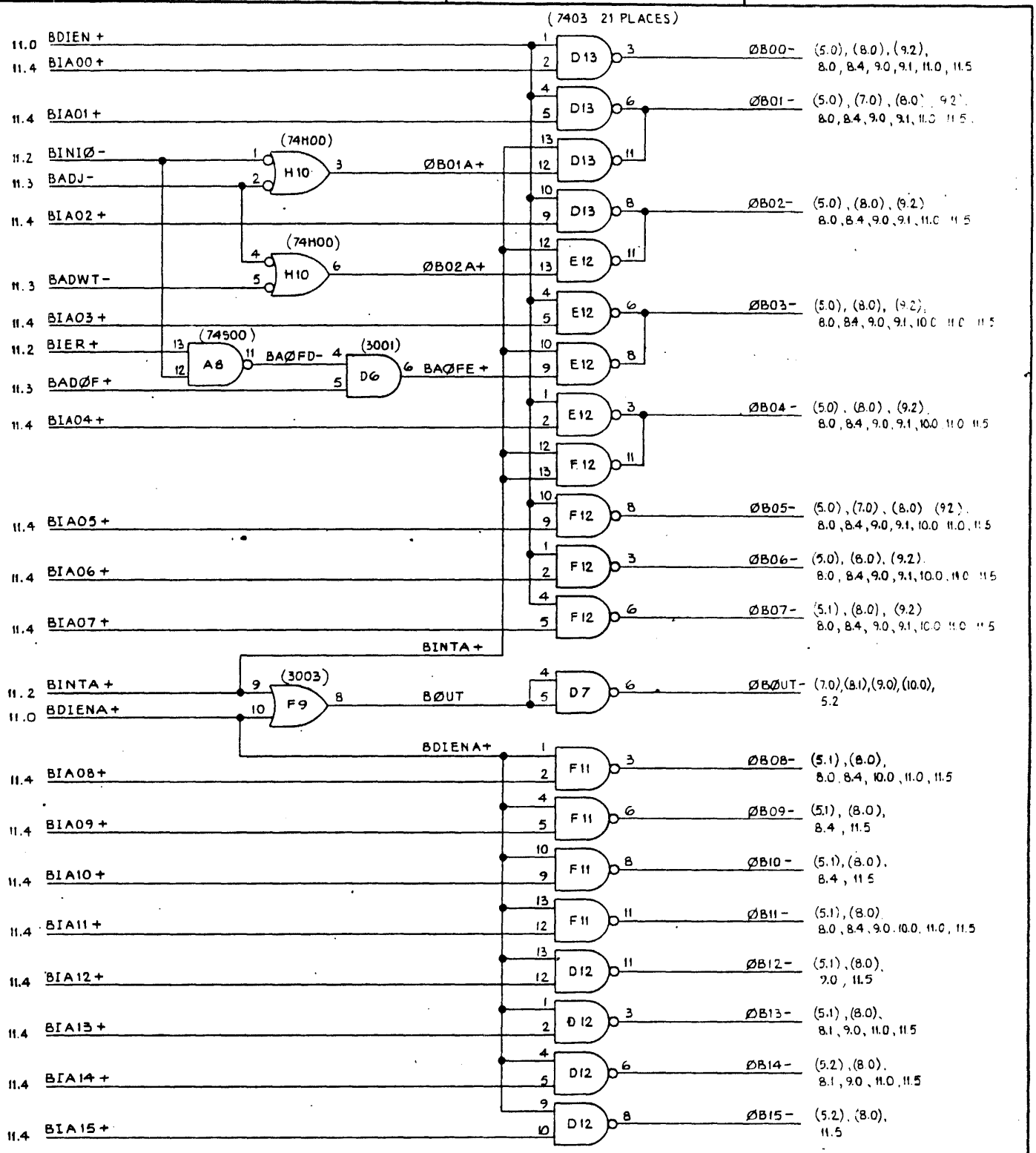

MEMORY PROTECT
I/Ø BUS DRIVERS

NOTE
1. (X.X) = SØURCE SHEET

CODE IDENT NO.	SIZE	DWG NO	REV
21101	C	W9100401	BY
SCALE			SHEET 11.1 OF

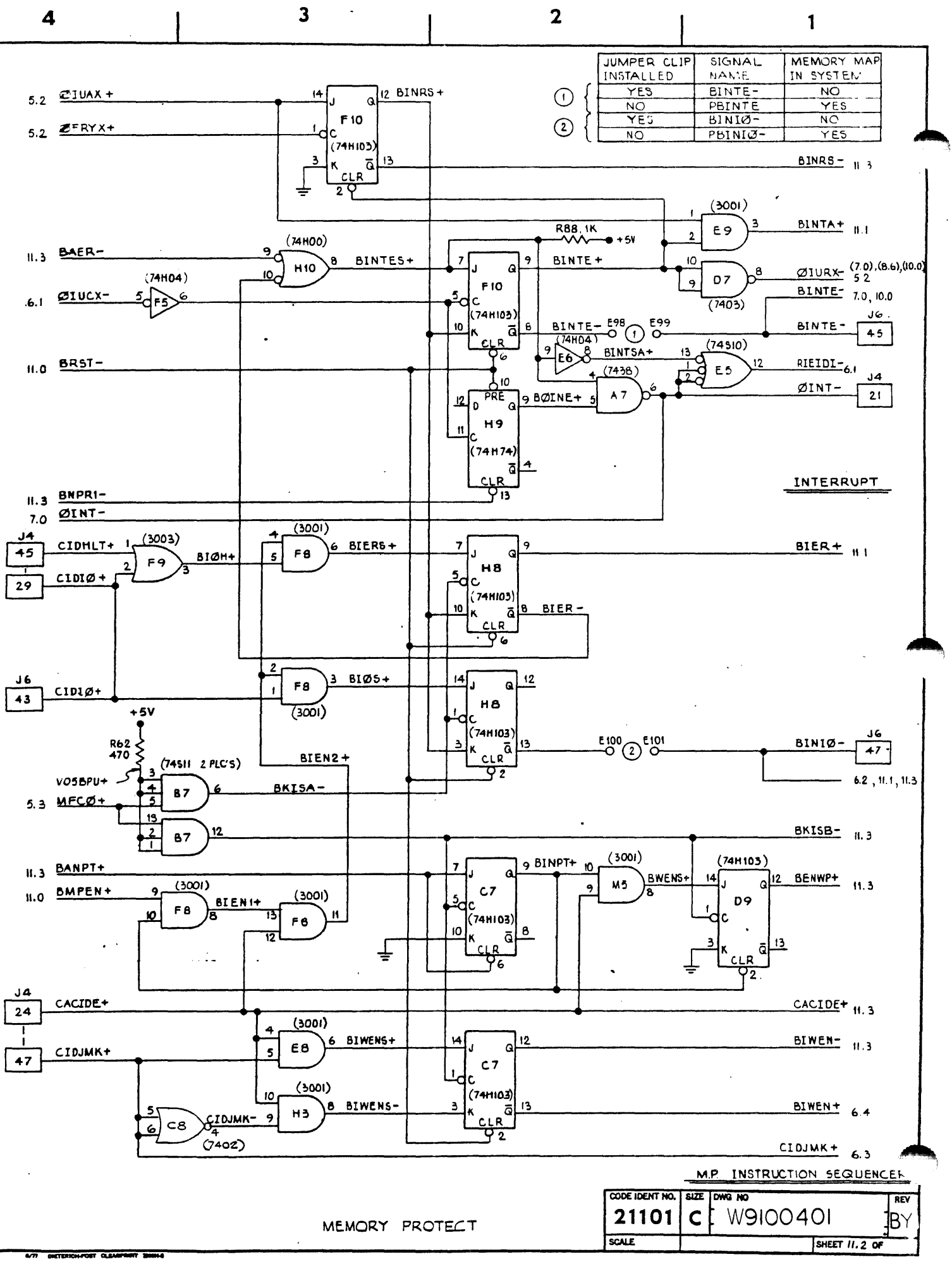
4
3
2
1
JUMPER CLIP INSTALLED
SIGNAL NAME
MEMORY MAP IN SYSTEM
1
YES
BINTE-
NO
NO
PBINTE
YES
2
YES
BINIØ-
NO
NO
PBINIØ-
YES
5.2 ØIUAX+
5.2 ØFRYX+
F10 (74H103)
BINRS+
BINRS- 11.3
(3001) E9
BINTA+ 11.1
R88, 1K
+5V
BINTE+
D7 (7403)
ØIURX- (7.0),(8.6),(10.0) 5.2
BINTE- 7.0, 10.0
11.3 BAER-
H10 (74H00)
BINTES+
.6.1 ØIUCX-
F5 (74H04)
BINTE- E98 (1) E99
J6 45 BINTE-
E6 (74H04)
BINTSA+
E5 (74S10)
RIEIDI- 6.1
11.0 BRST-
A7 (7438)
BØINE+
H9 (74H74) PRE CLR
ØINT-
J4 21
INTERRUPT
11.3 BNPR1-
7.0 ØINT-
J4 45 CIDMLT+
J4 29 CIDIØ+
F9 (3003)
BIØH+
F8 (3001)
BIER6+
H8 (74H103)
BIER+ 11.1
BIER-
J6 43 CIDIØ+
BIØ5+
BIEN2+
+5V
R62 470
VOSBPU+
5.3 MFCØ+
B7 (74S11 2 PLC'S)
BKISA-
BKISB- 11.3
11.3 BANPT+
11.0 BMPEN+
BIEN1+
C7 (74H103)
BINPT+
M5 (3001)
BWENS+
D9 (74H103)
BENWP+ 11.3
J4 24 CACIDE+
CACIDE+ 11.3
J4 47 CIDJMK+
E8 (3001)
BIWENS+
BIWEN- 11.3
C8 (7402)
CIDJMK-
H3 (3001)
BIWENS-
BIWEN+ 6.4
CIDJMK+ 6.3
E100 (2) E101
BINIØ- J6 47
6.2, 11.1, 11.3
M.P. INSTRUCTION SEQUENCER
MEMORY PROTECT
CODE IDENT NO. 21101
SIZE C
DWG NO W9100401
REV BY
SCALE
SHEET 11.2 OF

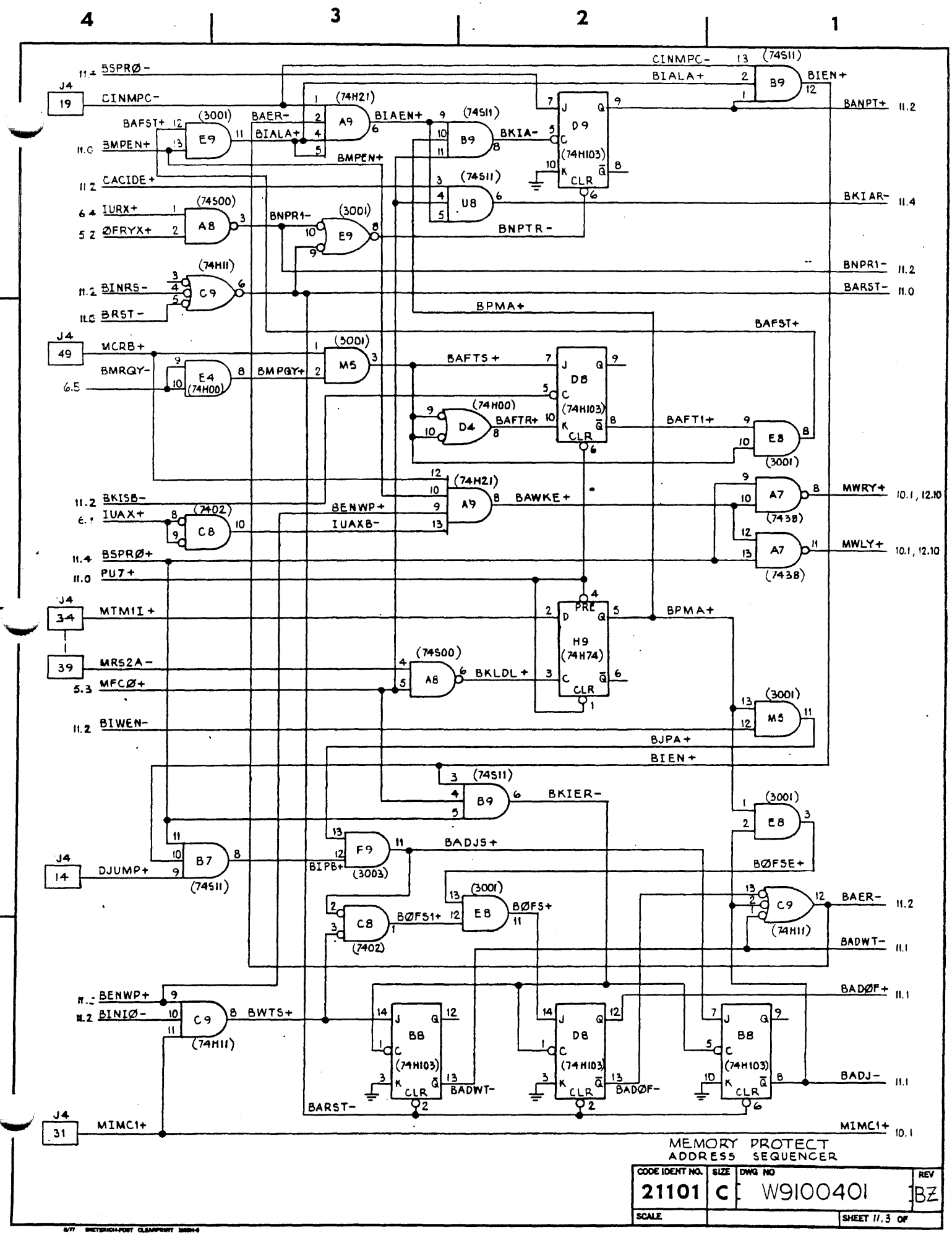
4
3
2
1
BSPRØ-
CINMPC-
BIALA+
BIEN+
BANPT+ 11.2
BAFST+
BAER-
BIALA+
BIAEN+
BKIA-
BMPEN+
CACIDE+
BKIAR- 11.4
IURX+
ØFRYX+
BNPR1-
BNPTR-
BNPR1- 11.2
BINRS-
BRST-
BARST- 11.0
BPMA+
BAFST+
MCRB+
BMRQY-
BMPQY+
BAFTS+
BAFTR+
BAFT1+
BKISB-
IUAX+
BENWP+
IUAXB-
BAWKE+
MWRY+ 10.1, 12.10
MWLY+ 10.1, 12.10
BSPRØ+
PU7+
MTM1I+
MR52A-
MFCØ+
BKLDL+
BIWEN-
BJPA+
BIEN+
BKIER-
DJUMP+
BIPB+
BADJS+
BØFSE+
BØFS1+
BØFS+
BAER- 11.2
BADWT- 11.1
BENWP+
BINIØ-
BWTS+
BADØF+ 11.1
BADWT-
BADØF-
BADJ- 11.1
BARST-
MIMC1+
MIMC1+ 10.1
MEMORY PROTECT
ADDRESS SEQUENCER
CODE IDENT NO. 21101
SIZE C
DWG NO W9100401
REV BZ
SCALE
SHEET 11.3 OF

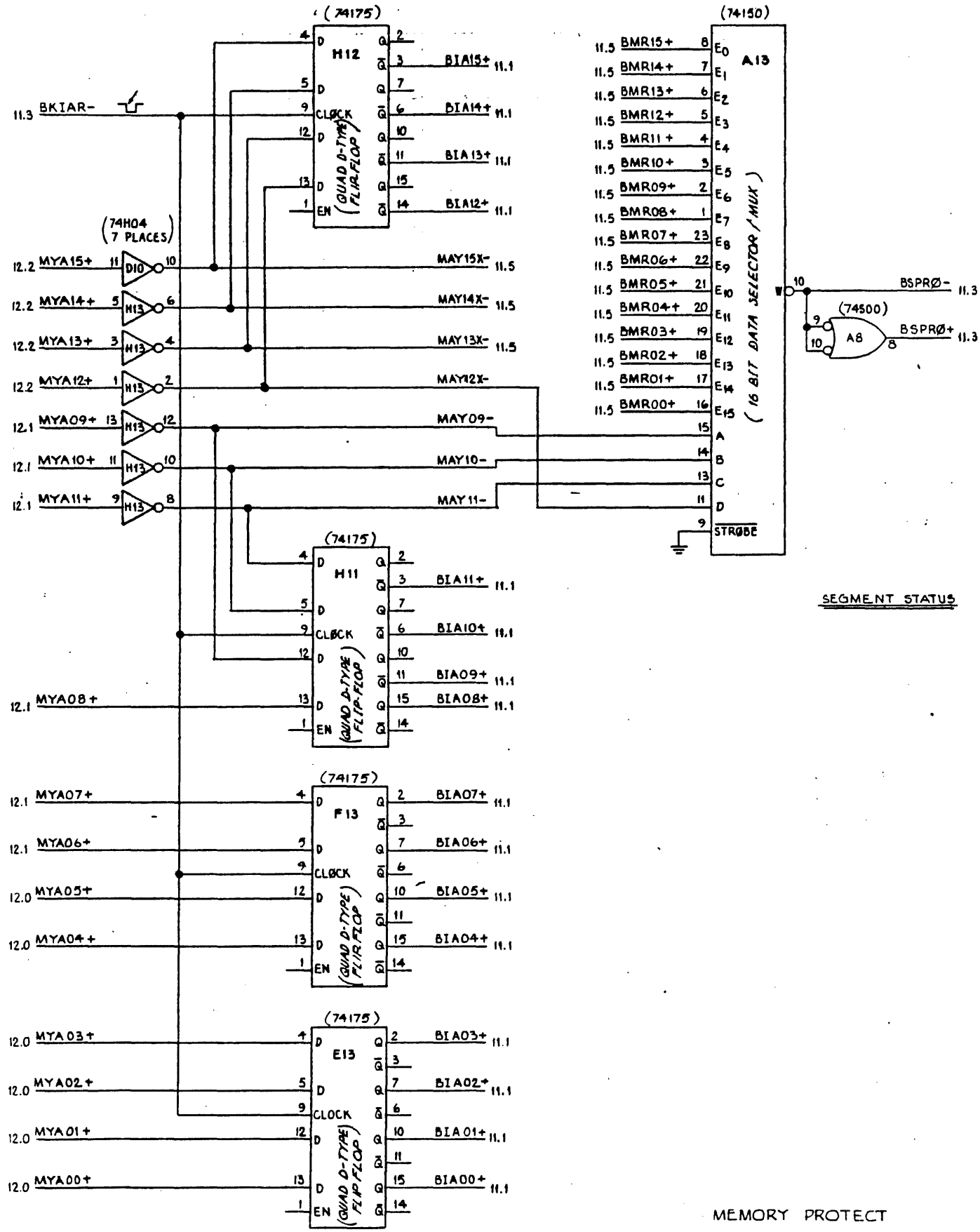

CODE IDENT NO.	SIZE	DWG NO	REV
21101	C	W9100401	BY
SCALE		SHEET 11.4 OF	

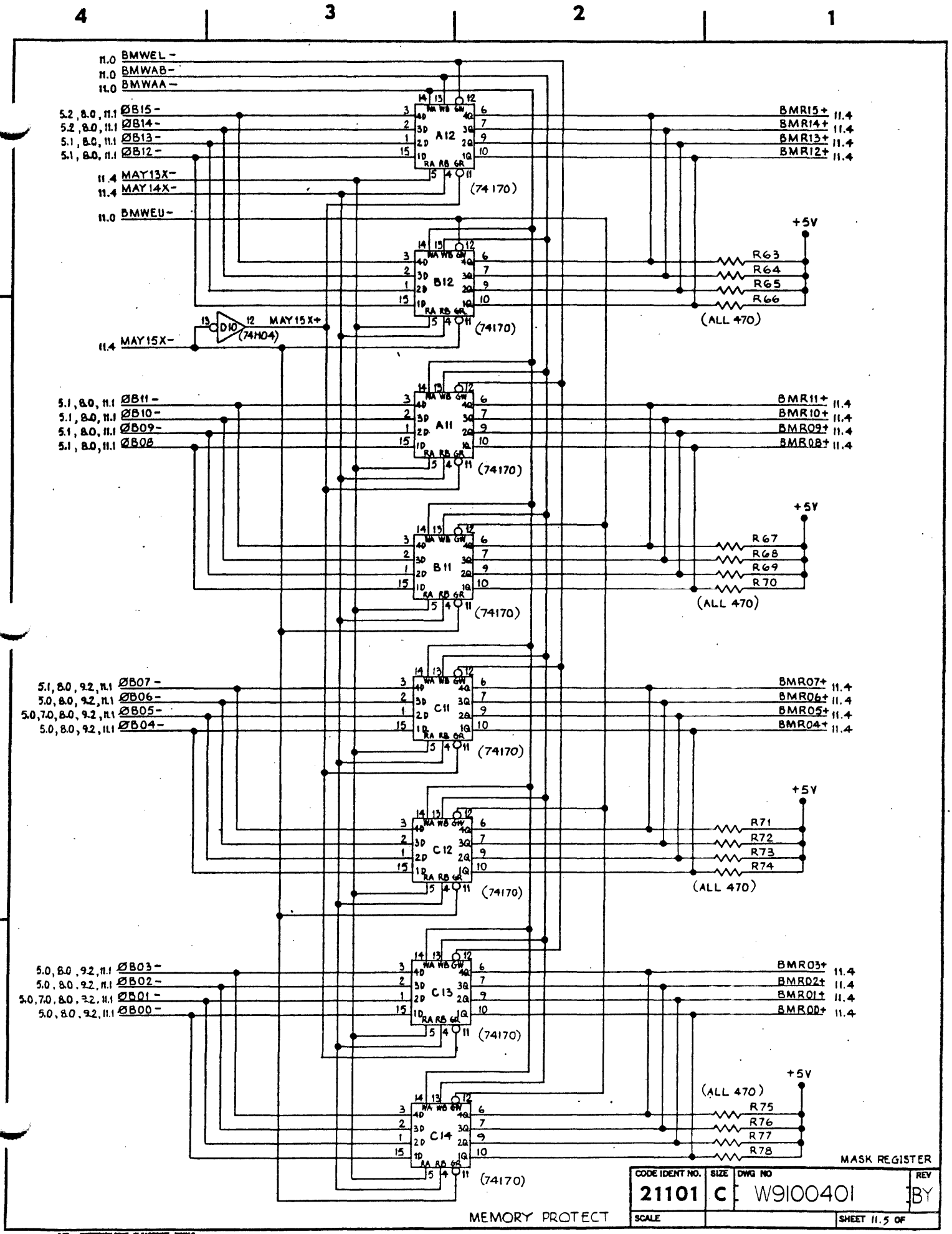
4
3
2
1
11.0 BMWEL-
11.0 BMWAB-
11.0 BMWAA-
5.2, 8.0, 11.1 ØB15-
5.2, 8.0, 11.1 ØB14-
5.1, 8.0, 11.1 ØB13-
5.1, 8.0, 11.1 ØB12-
11.4 MAY13X-
11.4 MAY14X-
11.0 BMWEU-
A12
(74170)
BMR15+ 11.4
BMR14+ 11.4
BMR13+ 11.4
BMR12+ 11.4
+5V
R63
R64
R65
R66
(ALL 470)
B12
(74170)
D10
(74H04)
MAY15X+
11.4 MAY15X-
5.1, 8.0, 11.1 ØB11-
5.1, 8.0, 11.1 ØB10-
5.1, 8.0, 11.1 ØB09-
5.1, 8.0, 11.1 ØB08
A11
(74170)
BMR11+ 11.4
BMR10+ 11.4
BMR09+ 11.4
BMR08+ 11.4
+5V
R67
R68
R69
R70
(ALL 470)
B11
(74170)
5.1, 8.0, 9.2, 11.1 ØB07-
5.0, 8.0, 9.2, 11.1 ØB06-
5.0, 7.0, 8.0, 9.2, 11.1 ØB05-
5.0, 8.0, 9.2, 11.1 ØB04-
C11
(74170)
BMR07+ 11.4
BMR06+ 11.4
BMR05+ 11.4
BMR04+ 11.4
+5V
R71
R72
R73
R74
(ALL 470)
C12
(74170)
5.0, 8.0, 9.2, 11.1 ØB03-
5.0, 8.0, 9.2, 11.1 ØB02-
5.0, 7.0, 8.0, 9.2, 11.1 ØB01-
5.0, 8.0, 9.2, 11.1 ØB00-
C13
(74170)
BMR03+ 11.4
BMR02+ 11.4
BMR01+ 11.4
BMR00+ 11.4
+5V
(ALL 470)
R75
R76
R77
R78
C14
(74170)
MASK REGISTER
MEMORY PROTECT
CODE IDENT NO. 21101
SIZE C
DWG NO W9100401
REV BY
SCALE
SHEET 11.5 OF

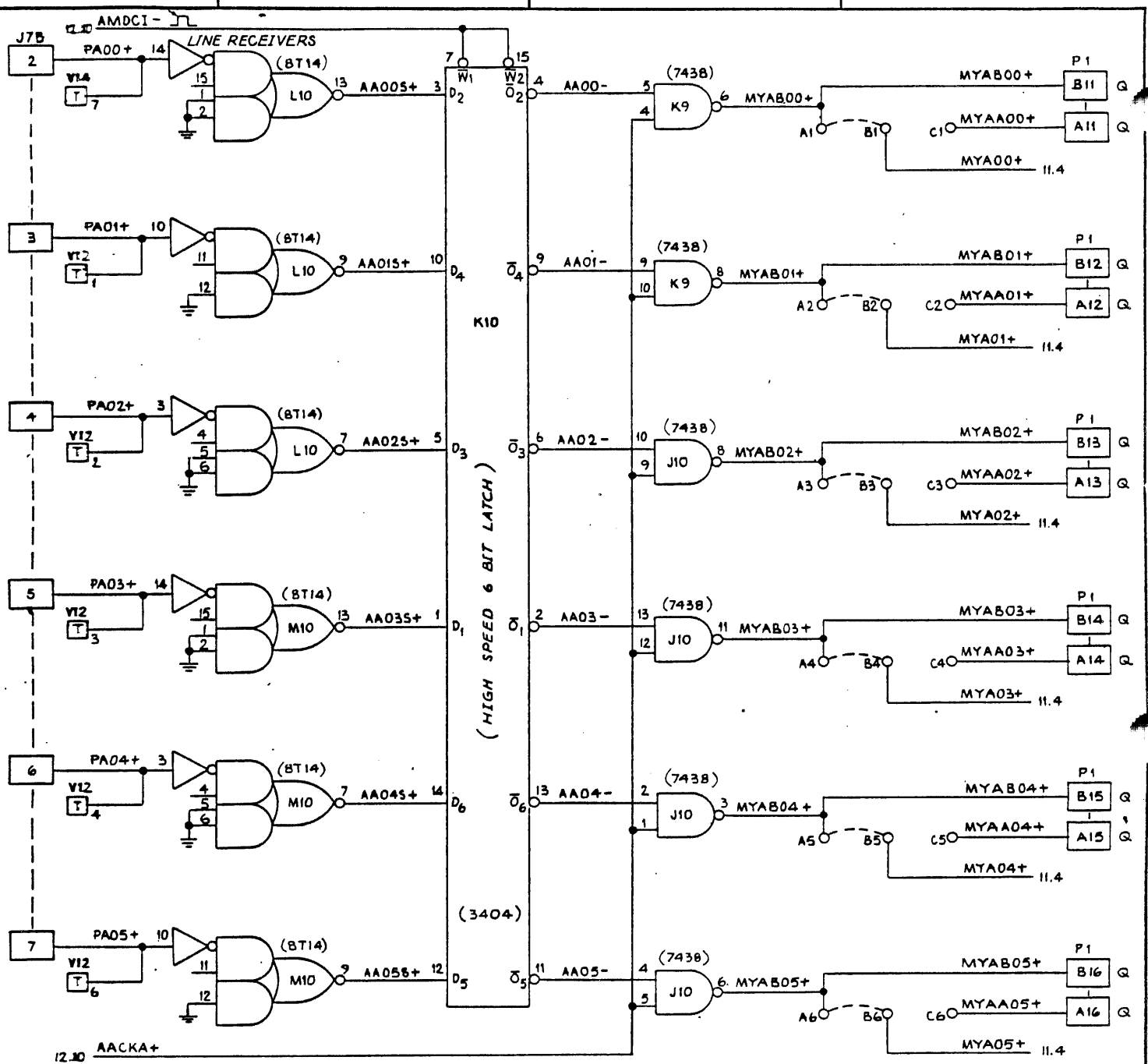

PMA - ADDRESS BUFFER

CODE IDENT NO.	SIZE	DWG NO	REV
21101	C	W9100401	BY
SCALE			SHEET 12.0 OF

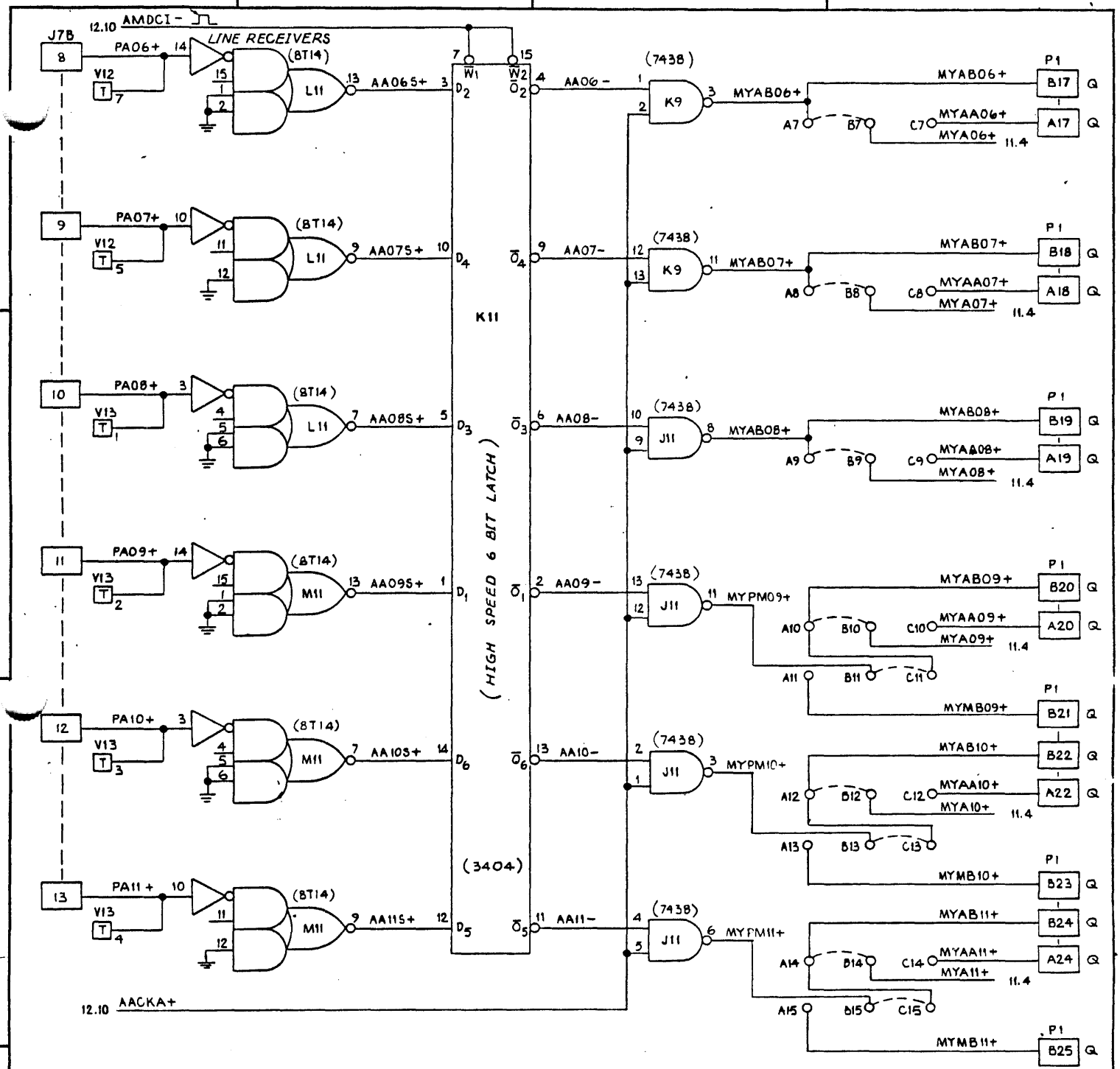

PMA — ADDRESS BUFFER

CODE IDENT NO.	SIZE	DWG NO	REV
21101	C	W9100401	BY
SCALE			SHEET 12.1 OF

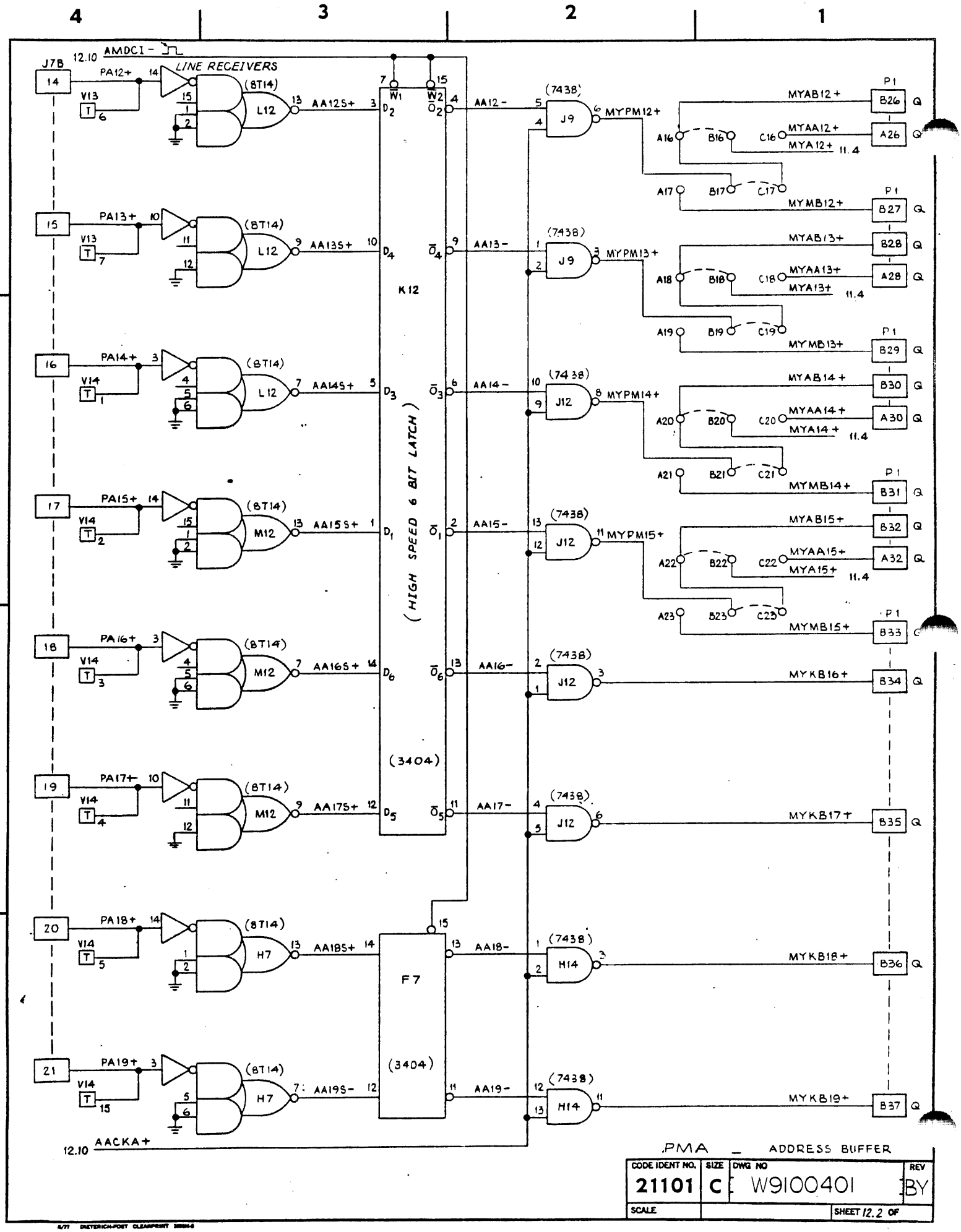
4
3
2
1
12.10 AMDCI-
LINE RECEIVERS
J7B
14
PA12+
V13
T
6
(8T14)
L12
AA12S+
W1
W2
D2
O2
AA12-
(7438)
J9
MYPM12+
MYAB12+
MYAA12+
MYA12+
11.4
MYMB12+
P1
B26
A26
B27
15
PA13+
V13
T
7
(8T14)
L12
AA13S+
D4
O4
AA13-
(7438)
J9
MYPM13+
MYAB13+
MYAA13+
MYA13+
11.4
MYMB13+
B28
A28
B29
16
PA14+
V14
T
1
(8T14)
L12
AA14S+
D3
O3
AA14-
(7438)
J12
MYPM14+
MYAB14+
MYAA14+
MYA14+
11.4
MYMB14+
B30
A30
B31
17
PA15+
V14
T
2
(8T14)
M12
AA15S+
D1
O1
AA15-
(7438)
J12
MYPM15+
MYAB15+
MYAA15+
MYA15+
11.4
MYMB15+
B32
A32
B33
18
PA16+
V14
T
3
(8T14)
M12
AA16S+
D6
O6
AA16-
(7438)
J12
MYKB16+
B34
19
PA17+
V14
T
4
(8T14)
M12
AA17S+
D5
O5
AA17-
(7438)
J12
MYKB17+
B35
K12
(HIGH SPEED 6 BIT LATCH)
(3404)
20
PA18+
V14
T
5
(8T14)
H7
AA18S+
F7
(3404)
AA18-
(7438)
H14
MYKB18+
B36
21
PA19+
V14
T
15
(8T14)
H7
AA19S-
AA19-
(7438)
H14
MYKB19+
B37
12.10 AACKA+
PMA – ADDRESS BUFFER
CODE IDENT NO. 21101
SIZE C
DWG NO W9100401
REV BY
SCALE
SHEET 12.2 OF

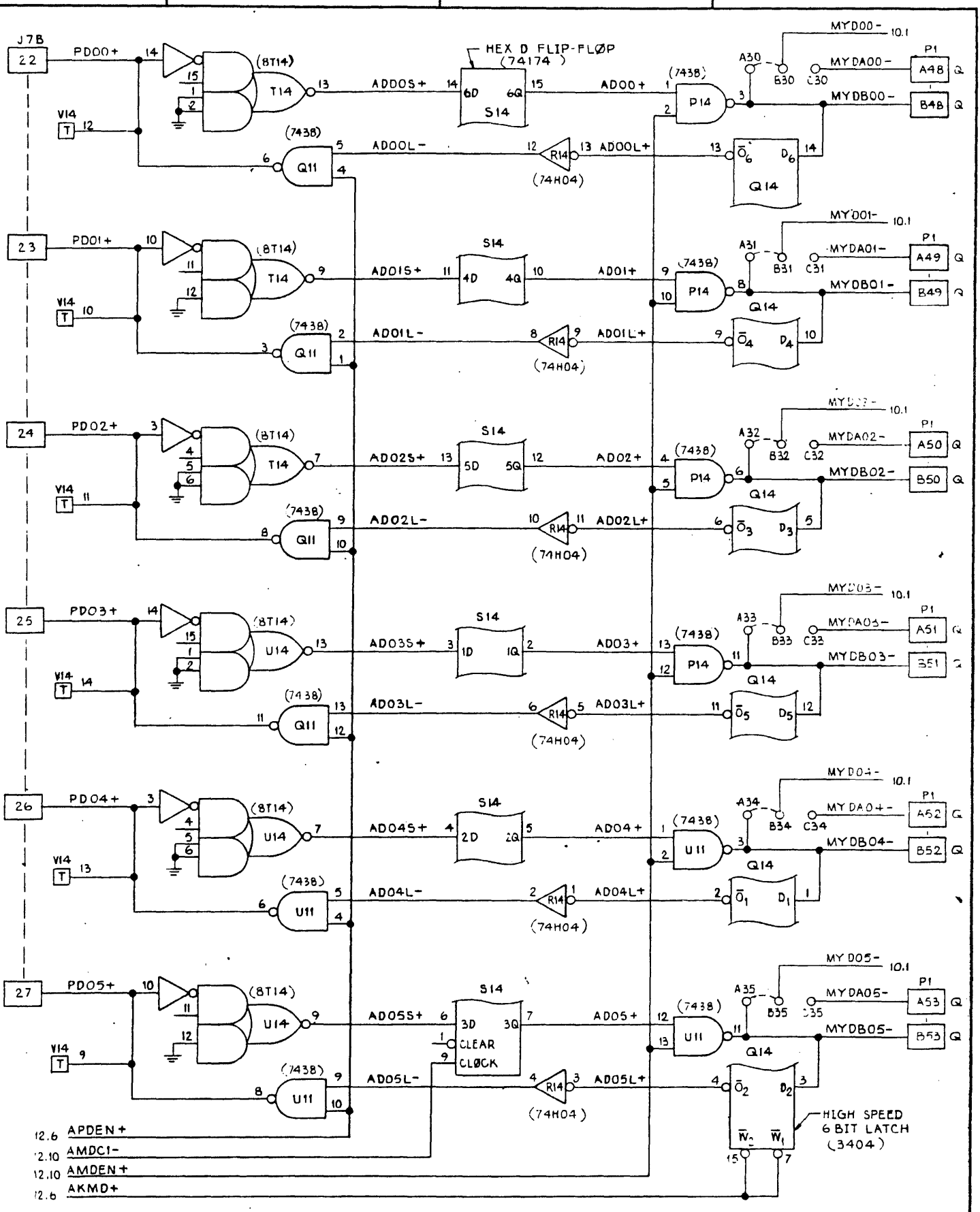

PMA _ DATA BUFFER

CODE IDENT NO.	SIZE	DWG NO	REV
21101	C	W9100401	BY
SCALE			SHEET 12.3 OF

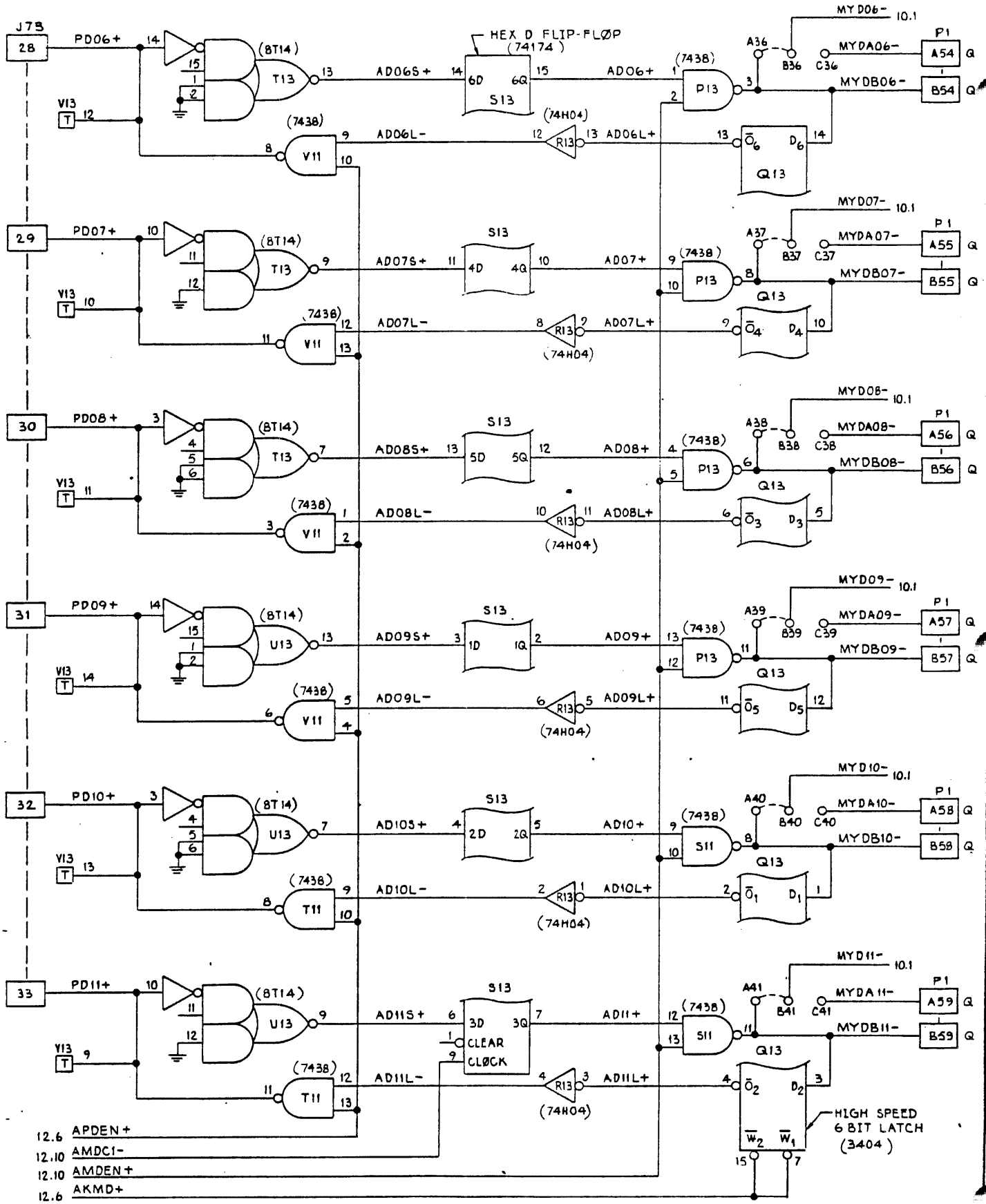

PMA _ DATA BUFFER

CODE IDENT NO.	SIZE	DWG NO	REV
21101	C	W9100401	BY
SCALE		SHEET 12.4 OF	

8/77 DIETERICH-POST CLEARPRINT 1000H-8

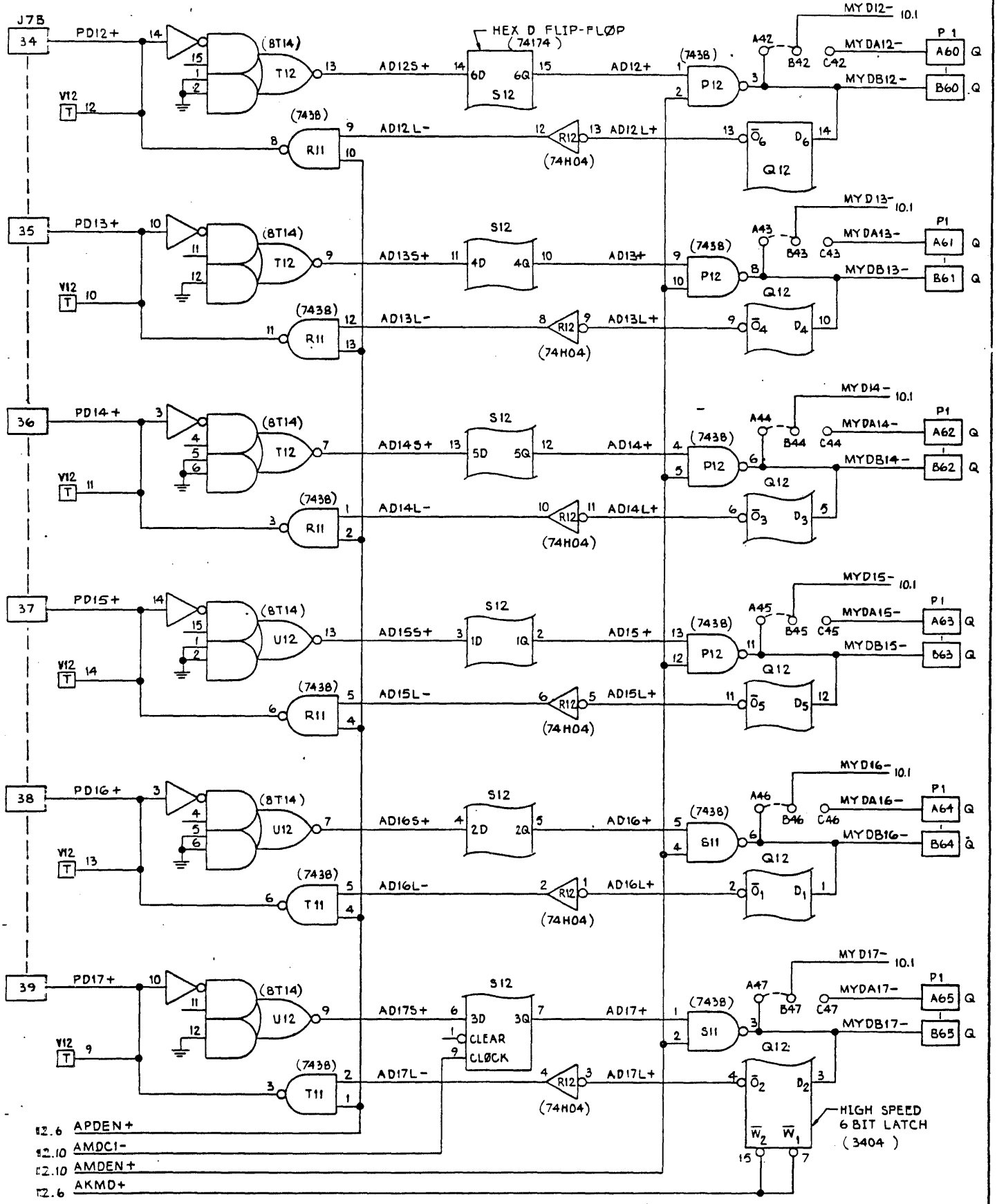

PMA _ DATA BUFFER

CODE IDENT NO.	SIZE	DWG NO	REV
21101	C	W9100401	BY
SCALE			SHEET 12.5 OF

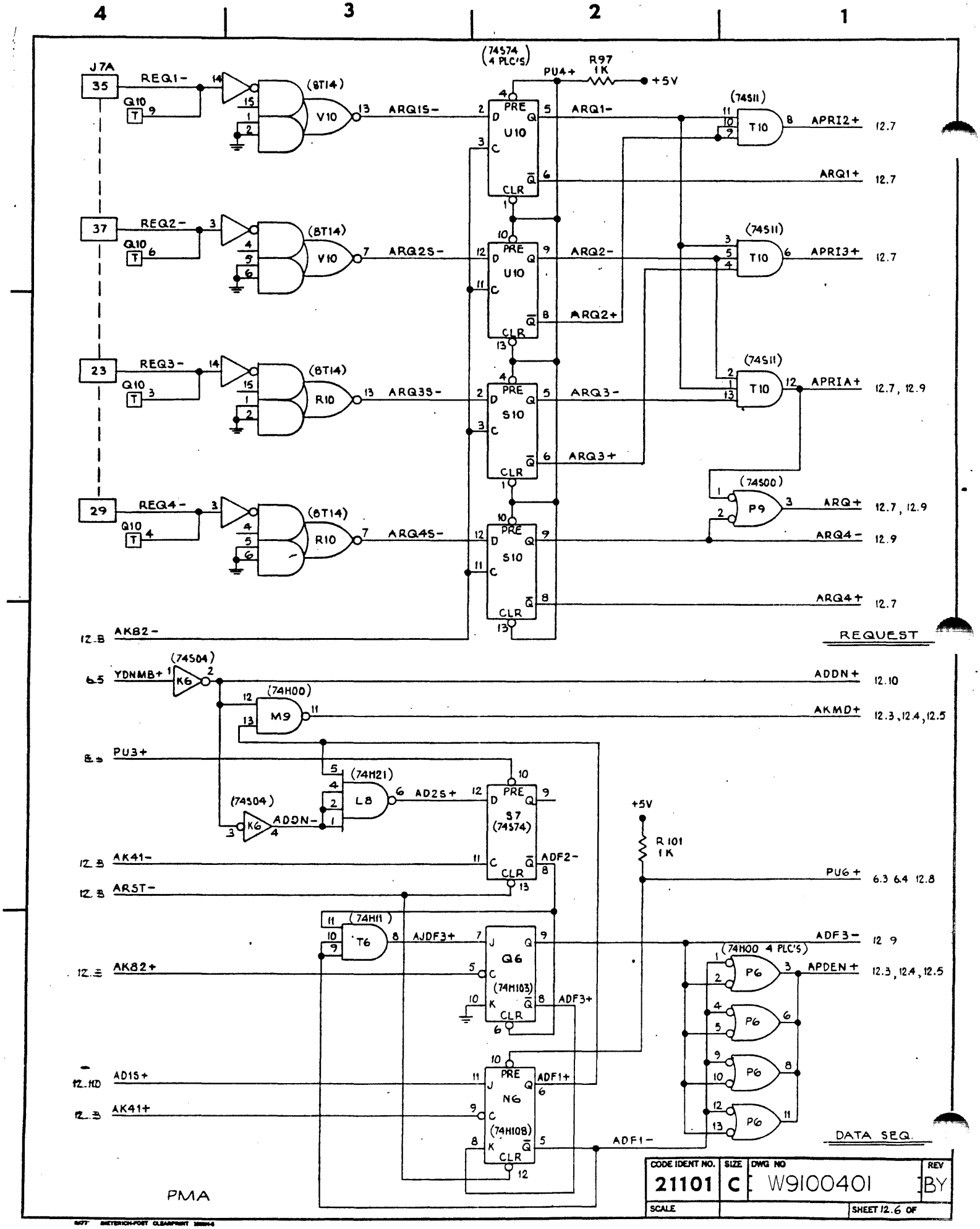

4
3
2
1
J7A
35
REQ1-
Q10
(8T14)
V10
ARQ1S-
(74S74 4 PLC'S)
PU4+
R97 1K
+5V
U10
PRE
CLR
ARQ1-
(74S11)
T10
APRI2+
12.7
ARQ1+
12.7
37
REQ2-
ARQ2S-
ARQ2-
APRI3+
ARQ2+
23
REQ3-
R10
ARQ3S-
S10
ARQ3-
APRIA+
12.7, 12.9
ARQ3+
(74S00)
P9
ARQ+
12.7, 12.9
29
REQ4-
ARQ4S-
ARQ4-
12.9
ARQ4+
12.7
12.8
AK82-
REQUEST
(74S04)
6.5
YDNMB+
K6
ADDN+
12.10
(74H00)
M9
AKMD+
12.3, 12.4, 12.5
8.5
PU3+
(74H21)
L8
AD2S+
S7 (74S74)
ADDN-
+5V
R101 1K
12.8
AK41-
ADF2-
PU6+
6.3 6.4 12.8
12.8
ARST-
(74H11)
T6
AJDF3+
Q6
(74H103)
ADF3-
12.9
(74H00 4 PLC'S)
P6
APDEN+
12.3, 12.4, 12.5
12.8
AK82+
ADF3+
12.10
AD1S+
N6
(74H108)
ADF1+
12.8
AK41+
ADF1-
DATA SEQ.
PMA
CODE IDENT NO.
21101
SIZE
C
DWG NO
W9100401
REV
BY
SCALE
SHEET 12.6 OF

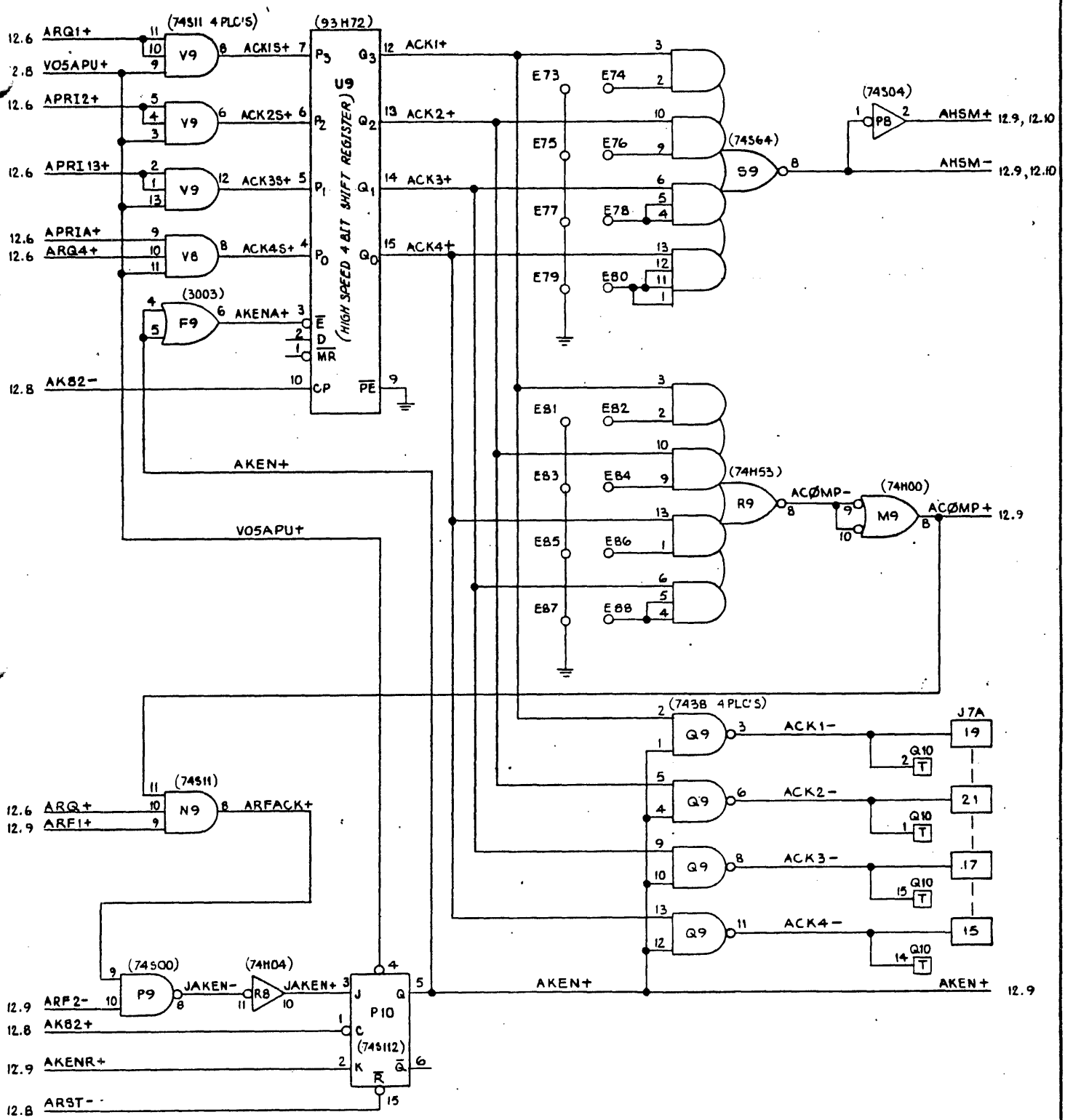
4
3
2
1
12.6 ARQ1+
2.8 VO5APU+
12.6 APRI2+
12.6 APRI13+
12.6 APRIA+
12.6 ARQ4+
(74S11 4 PLC'S)
V9
V9
V9
V8
ACK1S+
ACK2S+
ACK3S+
ACK4S+
(93H72)
U9
(HIGH SPEED 4 BIT SHIFT REGISTER)
P3 Q3
P2 Q2
P1 Q1
P0 Q0
CP
PE
ACK1+
ACK2+
ACK3+
ACK4+
(3003)
F9
AKENA+
E
D
MR
12.8 AK82-
E73 E74
E75 E76
E77 E78
E79 E80
(74S64)
S9
(74S04)
P8
AHSM+ 12.9, 12.10
AHSM- 12.9, 12.10
E81 E82
E83 E84
E85 E86
E87 E88
(74H53)
R9
ACØMP-
(74H00)
M9
ACØMP+ 12.9
AKEN+
VO5APU+
(7438 4 PLC'S)
Q9
ACK1-
ACK2-
ACK3-
ACK4-
J7A
19
21
17
15
Q10
T
12.6 ARQ+
12.9 ARF1+
(74S11)
N9
ARFACK+
(74S00)
P9
(74H04)
R8
JAKEN-
JAKEN+
12.9 ARF2-
12.8 AK82+
12.9 AKENR+
12.8 ARST-
P10
(74S112)
J Q
C
K
R
S
AKEN+
AKEN+ 12.9
PMA _ REQUEST
CODE IDENT NO. 21101
SIZE C
DWG NO W9100401
REV BY
SCALE
SHEET 12.7 OF

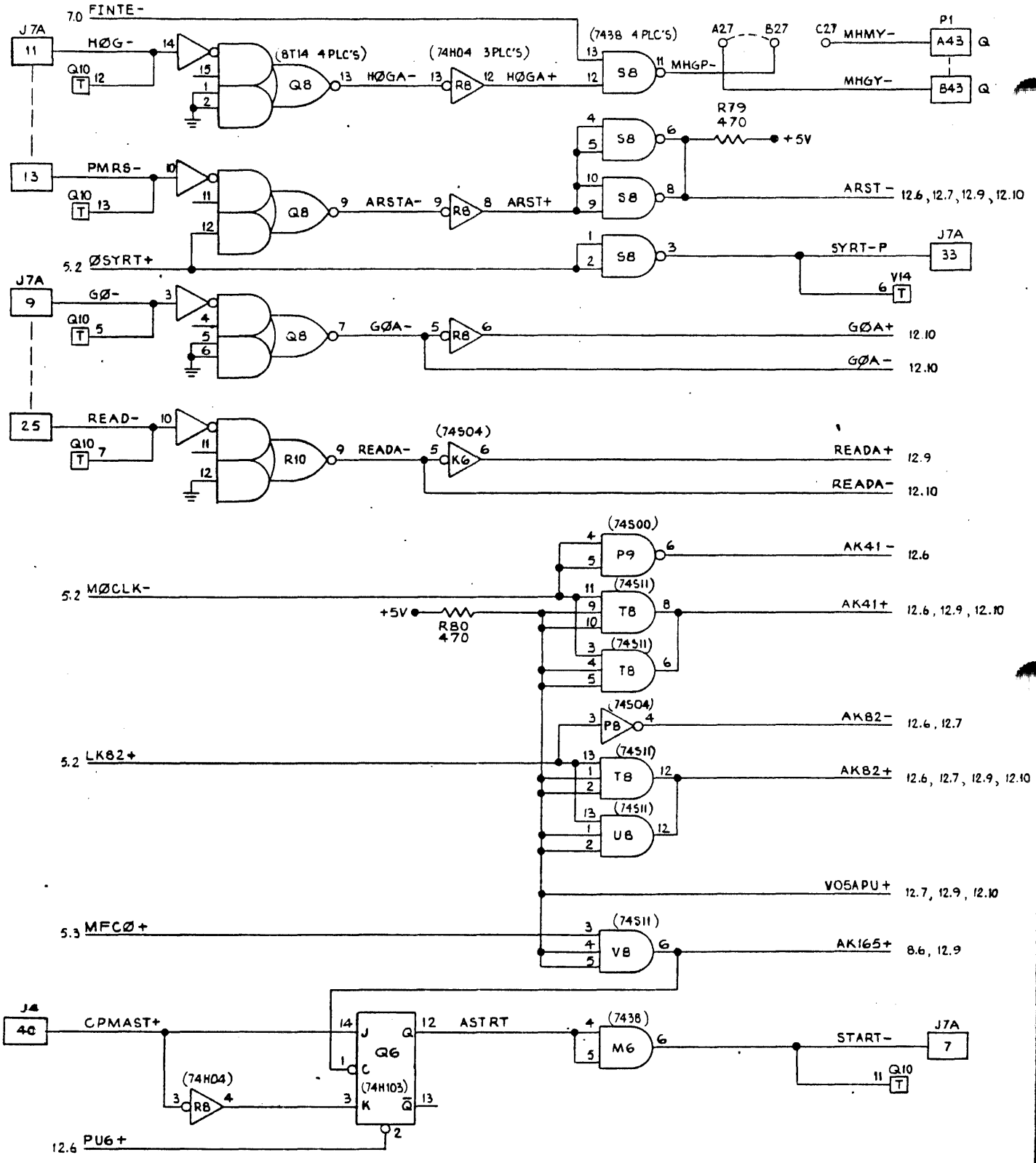

PMA _ MISC

CODE IDENT NO.	SIZE	DWG NO	REV
21101	C	W9100401	BY
SCALE			SHEET 12 OF

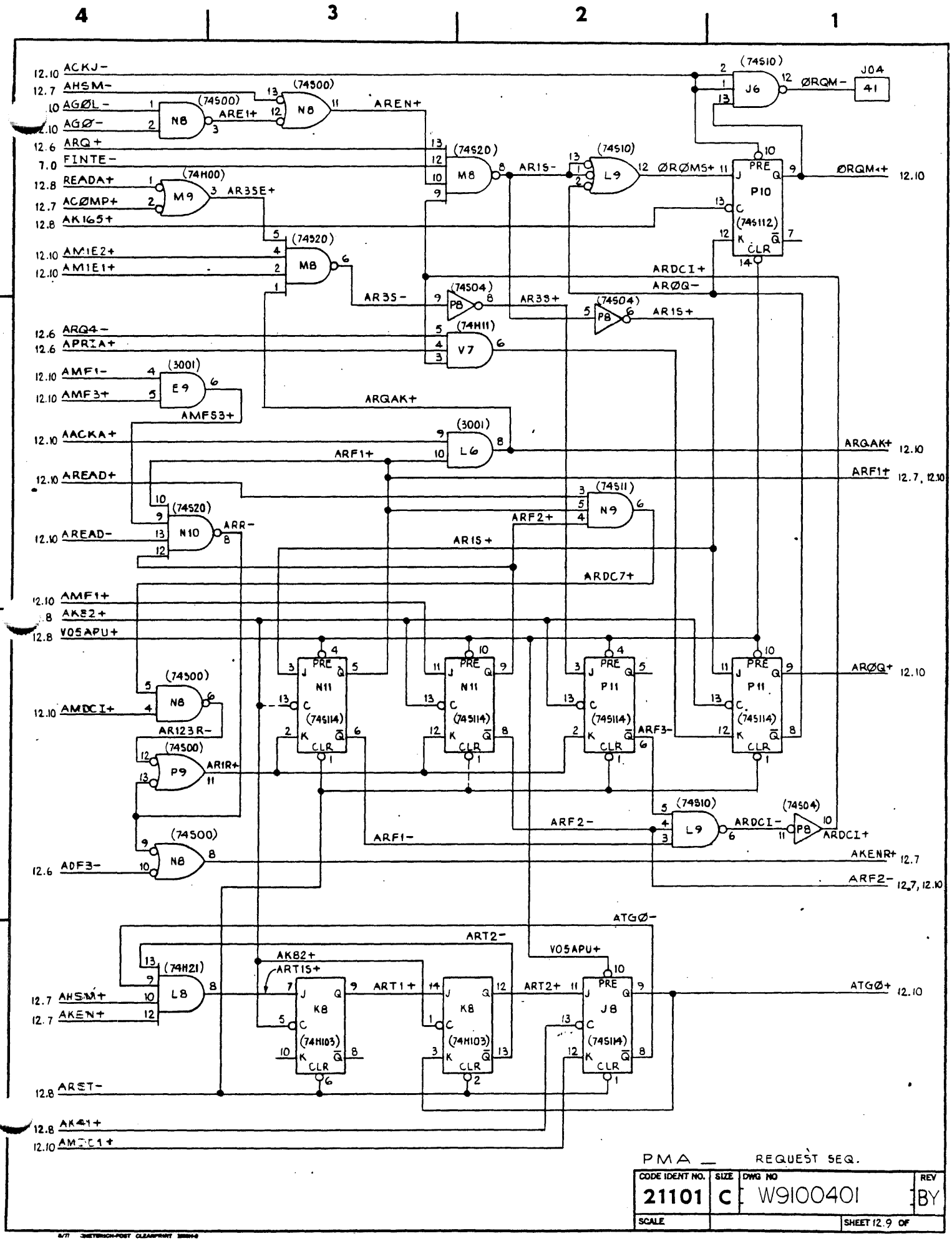

PMA __ REQUEST SEQ.

CODE IDENT NO.	SIZE	DWG NO	REV
21101	C	W9100401	BY
SCALE			SHEET 12.9 OF

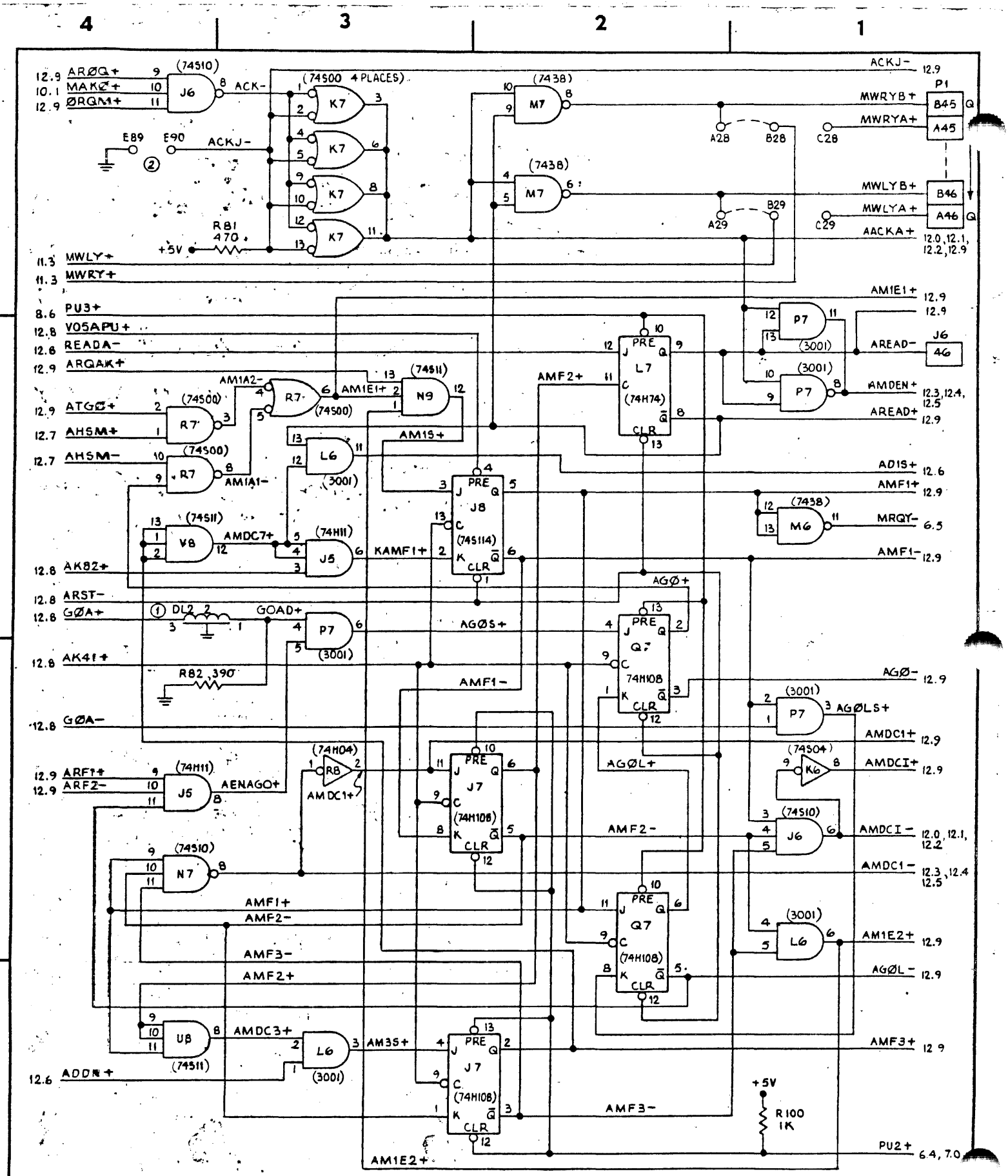
4
3
2
1
ARØQ+
MAKE+
ØRQM+
(74S10)
J6
ACK-
(74S00 4 PLACES)
K7
E89
E90
ACKJ-
RB1
470
+5V
MWLY+
MWRY+
PU3+
VO5APU+
READA-
ARQAK+
ATGØ+
AHSM+
AHSM-
R7
(74S00)
AM1A2-
AM1A1-
AM1E1+
N9
(74S11)
AM1S+
L6
(3001)
V8
AMDC7+
J5
(74H11)
KAMF1+
J8
(74S114)
AK82+
ARST-
GØA+
DL2
GOAD+
P7
(3001)
AK41+
R82 390
GØA-
ARF1+
ARF2-
AENAGO+
R8
AMDC1+
(74H04)
J7
(74H108)
N7
AMF1+
AMF2-
AMF3-
AMF2+
U8
AMDC3+
AM3S+
ADDR+
AM1E2+
M7
(7438)
MWRYB+
MWRYA+
A28
B28
C28
P1
B45
A45
MWLYB+
MWLYA+
A29
B29
C29
B46
A46
AACKA+
ACKJ-
12.0,12.1,12.2,12.9
AMF2+
L7
(74H74)
AREAD-
AREAD+
AMDEN+
J6
46
12.3,12.4,12.5
AD1S+
AMF1+
MRQY-
M6
AGØ+
AGØS+
Q7
74H108
AGØ-
AGØLS+
AGØL+
AMDC1+
AMDCI+
K6
(74S04)
AMDCI-
J6
(74S10)
AMDC1-
12.3,12.4,12.5
AM1E2+
AGØL-
AMF3+
AMF3-
R100
1K
PU2+
6.4, 7.0
② JUMPER IF NO OTHER USER ON MEMORY PORT.
① PART NO. 80A1000-004
30 NS DELAY LINE.
PMA __ MEMORY SEQ.
CODE IDENT NO. 21101
SIZE C
DWG NO W9100401
REV BY
SCALE
SHEET 12 OF 100

REVISIONS (CONTROLLING PIC REV LEVEL APPEARS ON THE FIRST SHEET)						
ZONE	LTR	EIR	DESCRIPTION — FOR DETAILS SEE EIR	CHK	DATE	APPROVED
	-	W9503.5 -01	RELEASED PT-00	PLW	10/9/81	

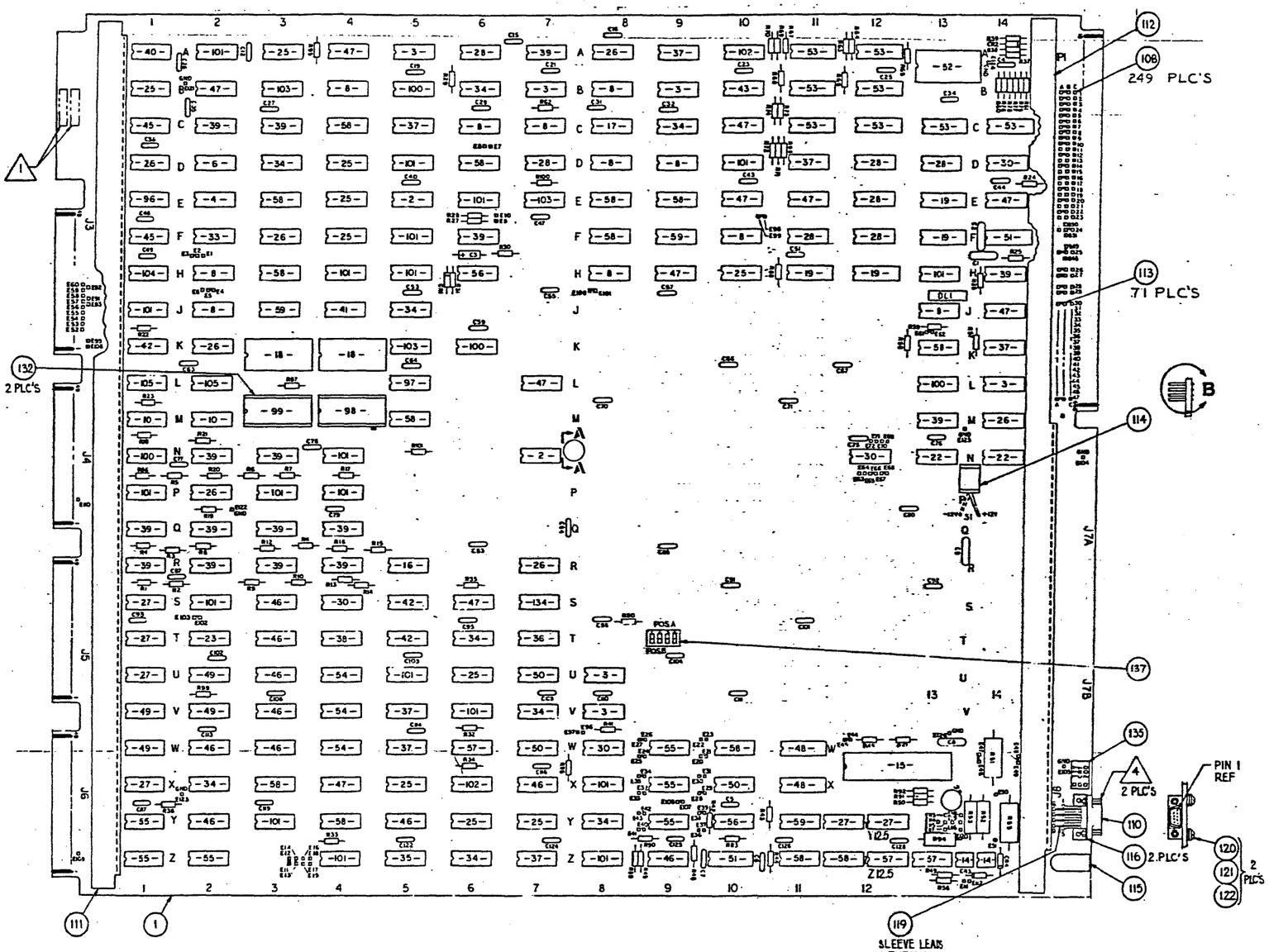

1. IDENTIFY PER 5001
2. INSTALL HARDWARE PER 5002
3. NUMBERS BETWEEN DASHES ARE FIND NO'S
4. HARDWARE SUPPLIED WITH F/N 110
5. S.C = SOLDER CONNECTION

WIRE LIST

IDENTIFICATION NO	IDENTIFICATION SIGNAL	TERMINATION FROM	TERMINATION F/N	TERMINATION TO	TERMINATION F/N	WIRE COLOR	WIRE AWG	WIRE F/N
1	JUMPER	E91	106	E52	108	WHT	30	136
		E92		E53				
3		E95		E110				
4		E54		E109				
5		E110	108	E109	108			136
12	JUMPER	E-13	108	E-18	108	WHT	30	136
13	JUMPER	A-24	108	B51	108	WHT	30	136

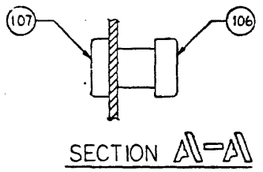

SECTION A-A

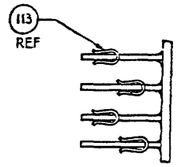

DETAIL B

TYPICAL JUMPER CLIP CONFIGURATION

COMPANY CONFIDENTIAL INFORMATION

THIS DOCUMENT CONTAINS CONFIDENTIAL INFORMATION OF THE SPERRY RAND CORPORATION. IN CONSIDERATION OF THE RECEIPT OF THIS DOCUMENT, THE RECIPIENT AGREES NOT TO REPRODUCE, COPY, USE OR TRANSMIT THIS DOCUMENT AND/OR THE INFORMATION THEREIN CONTAINED IN WHOLE OR IN PART, OR TO SUFFER SUCH ACTION BY OTHERS, FOR ANY PURPOSE, EXCEPT WITH THE WRITTEN PERMISSION FIRST OBTAINED OF SPERRY RAND CORPORATION, AND FURTHER AGREES TO SURRENDER SAME TO SPERRY RAND CORPORATION WHEN THE REASON FOR ITS RECEIPT HAS TERMINATED.

SPERRY UNIVAC IS A DIVISION OF SPERRY RAND CORPORATION

UNLESS OTHERWISE SPECIFIED
DIMENSIONS IN INCHES TOL ON
2 PLACE DECIMALS ± .03 | 3 PLACE DECIMALS ± .010 | ANGLES ± 0.5°
HOLE DIA TOL
0 THRU .250 ± .003 — .002 | .251 THRU .500 ± .005 — .003 | .501 AND LARGER ± .010 — .005
THREADS: EXT CL 2A. INT CL 2B
COMMODITY CODE

PART NO. 6603052-00
~~IDENT NO:~~

FOR MATL REQUIREMENTS SEE PL
PL REV LETTER CONTROLS DOCUMENT.

LAYOUT	J. COFFEEN	DATE 9-14	CLASS A
DRAFTSMAN	J. COFFEEN	9-14	
CHECKER	Robert Williams	10/9/81	
ENGINEER			
APPROVAL			

SPERRY UNIVAC

TITLE
PC ASSY-
OPTION BD.

SIZE	CODE IDENT NO.	DWG NO.
D	21101	6603052

SCALE — | WEIGHT — | SHEET 1 OF 1

DO NOT SCALE THIS PRINT

REVISIONS (CONTROLLING PIC REV LEVEL APPEARS ON THE FIRST SHEET)						
ZONE	LTR	EIR	DESCRIPTION — FOR DETAILS SEE EIR	CHK	DATE	APPROVED
	–	WS5059-01	RELEASED PT-00	P/M	10/19/81	

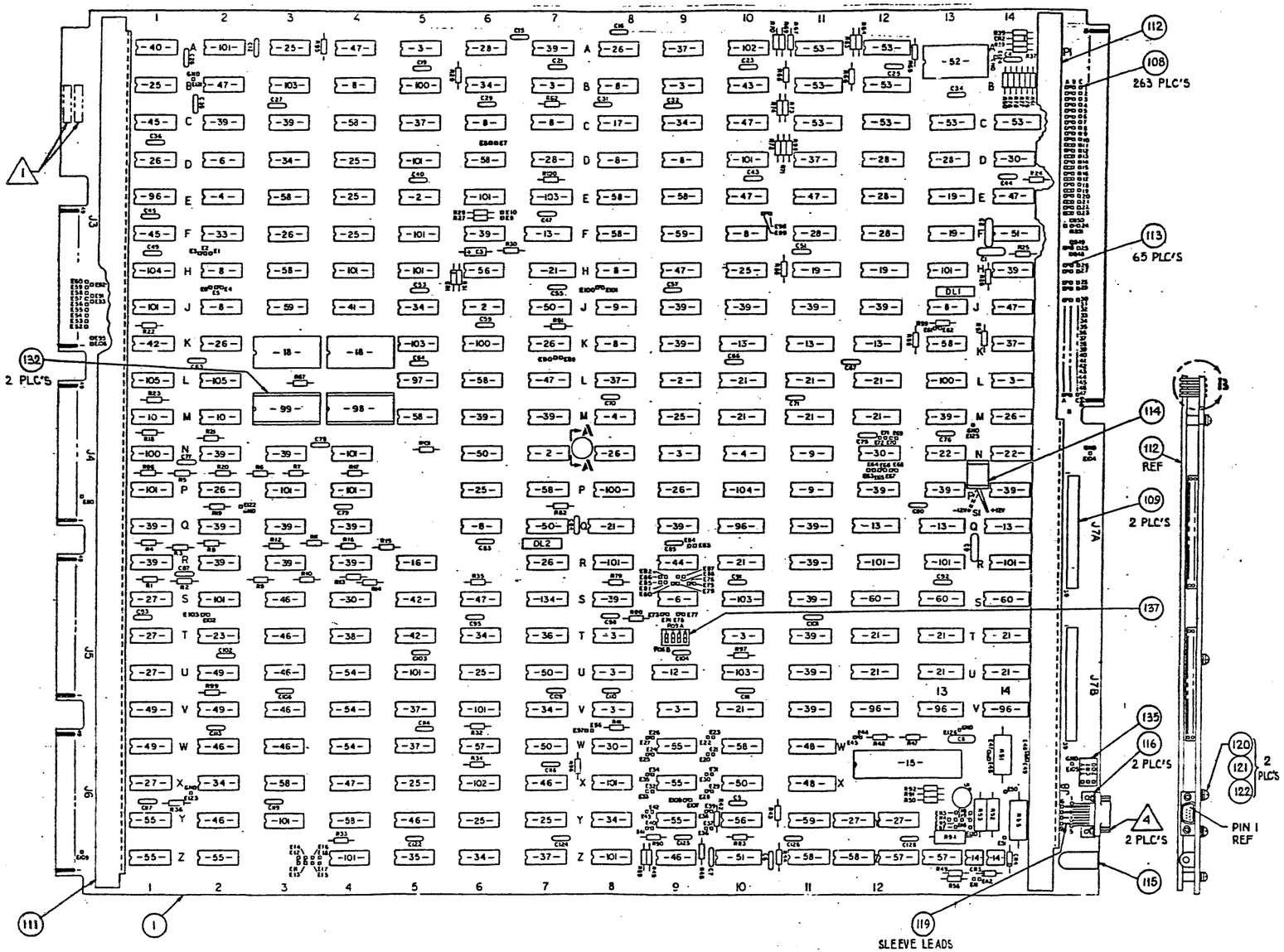

1. IDENTIFY PER (5001)
2. INSTALL HARDWRE PER (5002)
3. NUMBERS BETWEEN DASHES ARE FIND NO'S
4. HARDWARE SUPPLIED WITH F/N 110
5. S.C. = SOLDER CONNECTION

WIRE LIST

IDENTIFICATION		TERMINATION		TERMINATION		WIRE		
NO.	SIGNAL	FROM	F/N	TO	F/N	COLOR	AWG	F/N
1	JUMPER	E91	106	E52	108	WHT	30	136
2	"	E92	"	E53	"	"	"	"
3	"	E95	"	E110	"	"	"	"
4	"	E54	"	E109	"	"	"	"
5	"	E110	108	E109	108	"	"	136
12	JUMPER	E-13	108	E-18	108	WHT	30	136
13	JUMPER	A 24	108	B 51	108	WHT	30	136

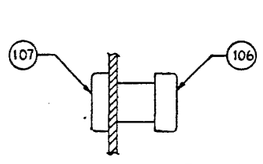

SECTION A-A

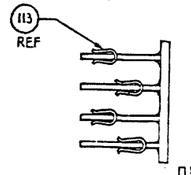

DETAIL B

TYPICAL JUMPER CLIP CONFIGURATION

PART NO. 66030S3-00
IDENT NO.

FOR MATL REQUIREMENTS SEE PL
PL REV LETTER CONTROLS DOCUMENT.

COMPANY CONFIDENTIAL INFORMATION

THIS DOCUMENT CONTAINS CONFIDENTIAL INFORMATION OF THE SPERRY RAND CORPORATION. IN CONSIDERATION OF THE RECEIPT OF THIS DOCUMENT, THE RECIPIENT AGREES NOT TO REPRODUCE, COPY, USE OR TRANSMIT THIS DOCUMENT AND/OR THE INFORMATION THEREIN CONTAINED IN WHOLE OR IN PART, OR TO SUFFER SUCH ACTION BY OTHERS, FOR ANY PURPOSE EXCEPT WITH THE WRITTEN PERMISSION FIRST OBTAINED OF SPERRY RAND CORPORATION, AND FURTHER AGREES TO SURRENDER SAME TO SPERRY RAND CORPORATION WHEN THE REASON FOR ITS RECEIPT HAS TERMINATED.

SPERRY UNIVAC IS A DIVISION OF SPERRY RAND CORPORATION

UNLESS OTHERWISE SPECIFIED			LAYOUT	DATE	CLASS
DIMENSIONS IN INCHES TOL ON			V. COFFEEN	9-14	A
2 PLACE DECIMALS	3 PLACE DECIMALS	ANGLES	DRAFTSMAN	9-14	
± .03	± .010	± 0.5°	V COFFEEN		
HOLE DIA TOL			CHECKER	9/9/81	
0 THRU .250 — .003 — .002	.251 THRU .500 — .005 — .003	.501 AND LARGER + .010 — .005	ENGINEER		
THREADS: EXT CL 2A, INT CL 2B			APPROVAL		
COMMODITY CODE					

SPERRY UNIVAC

TITLE: PC ASSEMBLY-OPTION BD.

SIZE	CODE IDENT NO.	DWG NO.
D	21101	66030S3

SCALE — WEIGHT — SHEET 1 OF 1

SPERRY UNIVAC

ENGINEERING NOTICE

EFFECTIVITY

44P0619-XXX
M-DAY 9-16-79
-01- SAME AS ABOVE
-02 SEE REISSUE BLOCK
-03 SAME AS -02

MODEL NO.

EN NO. 87799-05
PAGE 1 OF 9
ISSUE DATE 6-5-79

CHANGE CODE C-X-1
~~OUTSTANDING CODE 2~~
~~ENS~~

REASON,
TO ENABLE THE PARITY OPTION TO FUNCTION WITH THE EXISTING MEMORIES AND THE ERROR CORRECTING MEMORY.

PARTS DISPOSITION
☐ USE AS IS ☒ REWORK SEE PG 6-9
☐ NOT APPLICABLE ☐ SCRAP

YES | COST REVIEW SHT. | NO

ACTION,

97E0759 A/W - OPTION BD. DM357
1. REVISE TO CONFORM WITH CHANGES TO 91C0401. CAUTION PINS 7 & 14 MUST BE REMOVED FROM POWER & GND LAYERS AT LOCATION T9.

97E0764 S/M - OPTION BD. DM357

97E0760 S/S - OPTION BD. DM357
1. REVISE TO CONFORM WITH CHANGES TO 97E0759.

40E0528 PWB OPTION BD. DM357
1. UPDATE REV LTR OF ARTWORK MASTERS REQUIRED P/N'S 97E0764, 97E0760 & 97E0759 PER THIS EN.

44P0619 P/L - OPTION BOARD DM357
1. SHT 11 ADD F/N 137 P/N 78A0114-000. DESCRIPTION LS SWITCH, ADD QTY 1 FOR DASH NUMBERS 000 THRU 008.

2. UPDATE REV LTR OF REF DWG'S 44C0619 & 91C0401 & F/N 140E0528-000 PER THIS EN.

-03 SHT 8 REWORK REVISED NOTE 7. 7-5-79

REISSUE.-01 ADDED 01P1332 & 01P1953 TO SHT 5.
6-11-79
6-11-79
6-14-79
6-14-79

-02 CHANGE CODE FROM C2 TO C-1 EXCEPT S/O 73004, 73096, 70237, 70238, 70239, 70240 AND 70241
6-27-79

REFERENCE DOCUMENTS
RECO*08495

DOCUMENTS AFFECTED		REV IS	REV WAS
44P0619	*	DF	DE
44C0619		BC	BB
40E0528		CA	BE
91C0401	*	BW	BV
97E0759		BW	BV
97E0760		AA	Z
97E0764		BV	BU
01A1332		AC	AB
01A1953		E	D
01P1332		AA	Z
01P1953	*	E	D

*UPDATED VELLUMS ISSUED WITH THIS EN.

APPROVALS		DATE
DR	Paul Bergeron	5-10-79
CHK		5/21/79
ENG		6
MGRS		
MGR		
CRB		

L.H. -30-9 -13-9

UD2-4122

SEE PAGE 2 FOR REISSUE -04 & -05

-01 DE 4/3

Printed in U.S.A.

REISSUE. -04 PAGE 6, ADDED REV LTR "BA & ABOVE" TO DM357. MT 9.11.79	-05, PG 6, REVISED REV LTR OF DM 357 MT 9.27.79	EN NO. 81799-05 PAGE 2 OF 9

91C0401 LOGIC DIAGRAM OPTION BD. DM357

1. SHT 10.1 ZONE C3,

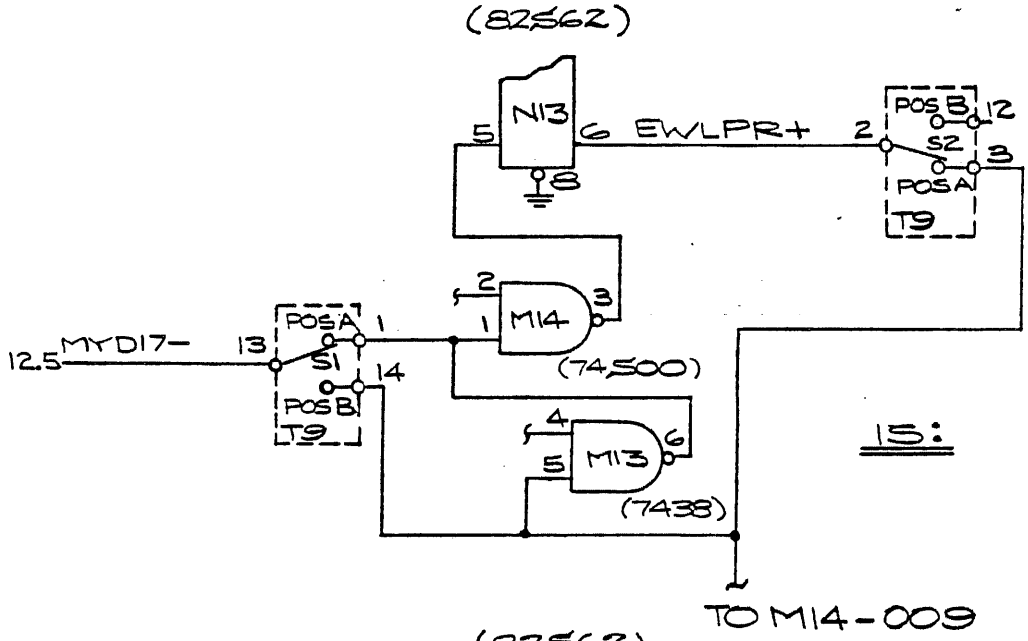

15:

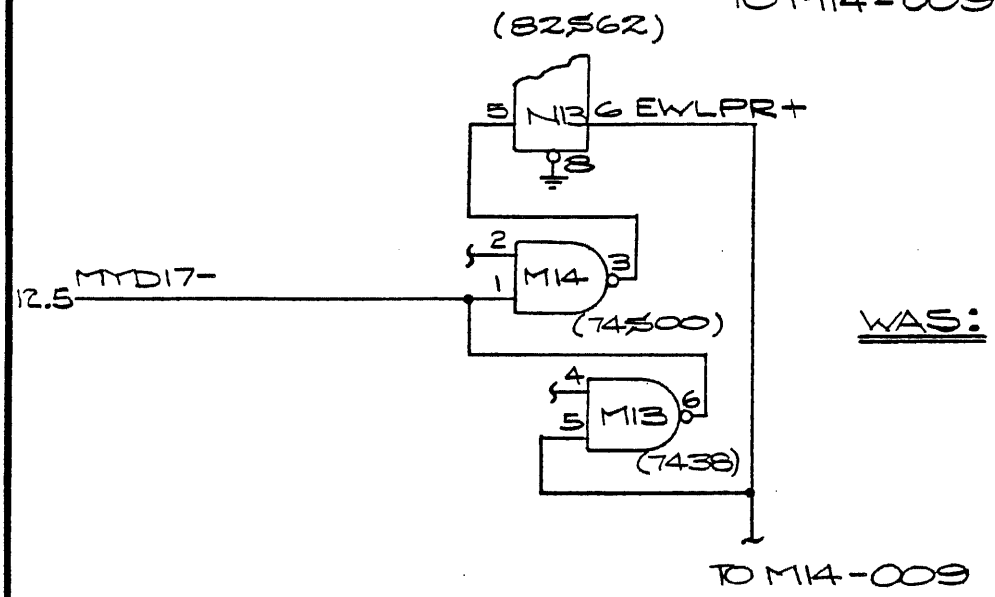

WAS:

2. SHT 10.1 ADD NOTE AS FOLLOWS:
SWITCH T9 SHOWN IN NON ERROR CORRECT POSITION.

91C0401 CONT

3. SHT 10.1 ZONE C1,

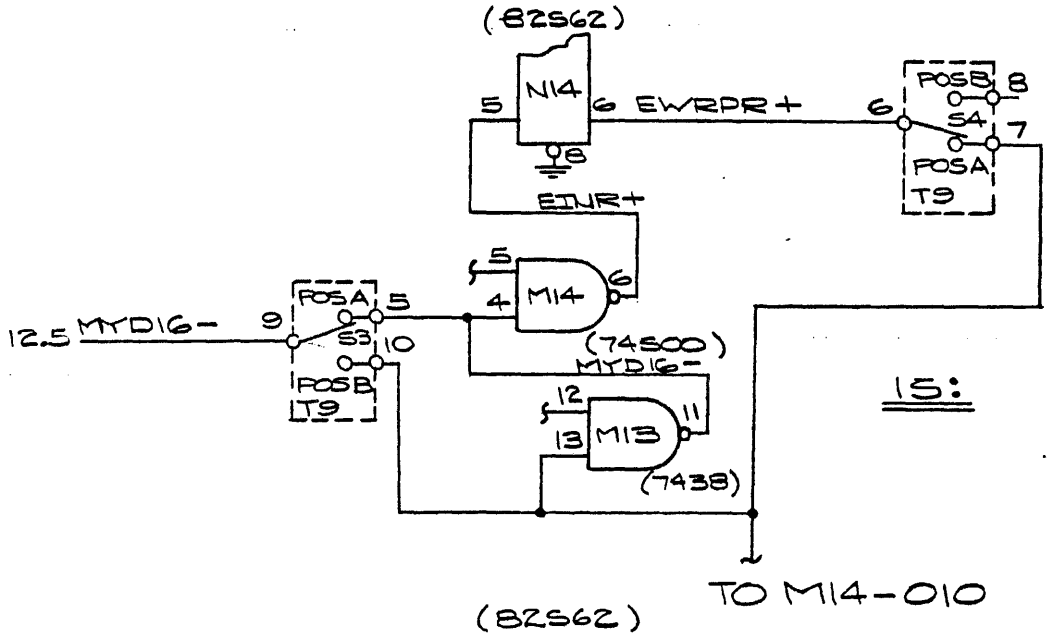

15:

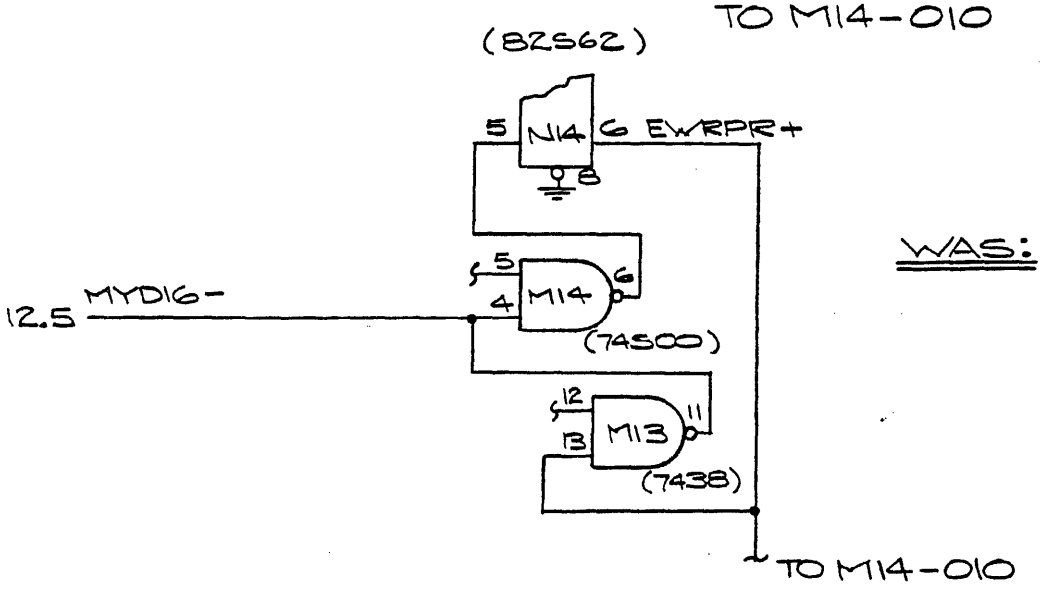

WAS:

44C0619 OPTION BOARD ASSY DM357

1. ON SHT'S 2 THRU 8 ADD SWITCH TO LOCATION T9 AS SHOWN:

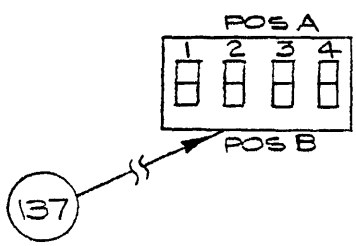

01A1953 MEMORY ACCESS CONTROLLER OPTION

1. SHT 2 NOTE 8.0 ADD THE FOLLOWING:

THE 44P0914-XXX REPLACES THE 44P0769-XXX 64K MEMORY BOARD. WHEN THE 128K ERROR CORRECT MEMORY BOARD (44P0925) IS USED WITH THIS OPTION, THE MEMORY PARITY SWITCH MUST BE ON. ALSO THE OPTION BOARD 44P0619-XXX MUST BE AT REVISION DF OR LATER.

2. SHT 3 TABLE 1, SWITCH LOCATION NUMBER M2-5, STD CONFIGURATION & ALTN CONFIGURATION

	STD CONFIGURATION	ALTN CONFIGURATION
M2-5	NON-ERROR CORRECT MEMORY WITHOUT PARITY OR ERROR CORRECT MEMORY	NON-ERROR CORRECT MEMORY WITH PARITY

IS:

	STD CONFIGURATION	ALTN CONFIGURATION
M2-5	SYSTEMS WITHOUT PARITY	SYSTEMS WITH PARITY

WAS:

01A1332 OPTION BOARD OPTION

1. SHT 12, ADD FUNCTION 'PARITY MEMORY SELECTION' TO TABLE 1 AS FOLLOWS.

01A1332 CONT

TABLE I

DASH NUMBER									FUNCTION	WIRING DESCRIPTION		STANDARD CONFIGURATION	ALTERNATE CONFIGURATIONS
-000	-001	-002	-003	-004	-005	-006	-007	-008		LOCATION	TYPE		
	X	X	X	X	X		X	X	PARITY MEMORY SELECTION	T9	SWITCH	POSITION "A" SELECTS NON ERROR CORRECT MEMORY PARITY	POSITION "B" SELECTS ERROR CORRECT MEMORY PARITY

2. SHT 10, TABLE I FUNCTION

IS:

PARITY MEMORY BUS SELECTION
SEE SHT 12 FOR PARITY MEMORY SELECTION

WAS:

PARITY MEMORY BUS SELECTION

01P1332 P/L OPTION BOARD OPTION

1. UPDATE REV LTR OF REF DWG 01A1332 PER THIS EN.

01P1953 P/L MEMORY ACCESS CONTROLLER OPTION

2. UPDATE REV LTR OF REF DWG 01A1953 PER THIS EN.

REWORK INSTRUCTIONS

EN NO. 87799-05
PAGE 6 OF 9

Reidentify the following revision letters by stamping an "X" over the old revision letter and restamping the new revision letter next to the "X".

REVISION IS:	REVISION WAS:
44P0619-000THRU-008 DF	44P0619-000THRU-008 DE

44P0619-000THRU-008 OPTION BOARD(DM357 ~~BA~~ BL & ABOVE)

1. AT LOCATION T9, DRILL OUT PADS 7 & 14 AND ADD SWITCH P/N 78A0114-000 & STAMP POS A & POS B AS SHOWN:

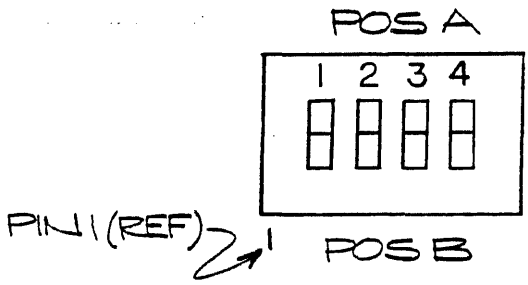

2. ADD THE FOLLOWING WIRES USING 53A0701-000 SOLID CONDUCTOR, 30 AWG, GRN. WIRES ADDED TO SOLDER SIDE MUST BE ROUTED .100 MIN AWAY FROM IC PADS AND GLUED TO BOARD WITH A MAX HEIGHT OF .100.

M13-006	TO	T9-001	SOLDER SIDE
M13-005		T9-014	
M14-009		M13-005	COMP SIDE
N13-006		T9-002	SOLDER SIDE
T9-003		T9-014	
M13-013		T9-010	
T9-010		T9-007	
N14-006		T9-006	
M13-011	TO	T9-005	

RETEST REQUIRED
YES ☒
NO ☐

REWORK INSTRUCTIONS

3. ON SOLDER SIDE CUT ETCH AT LOCATION M14 PIN 1 AS SHOWN:

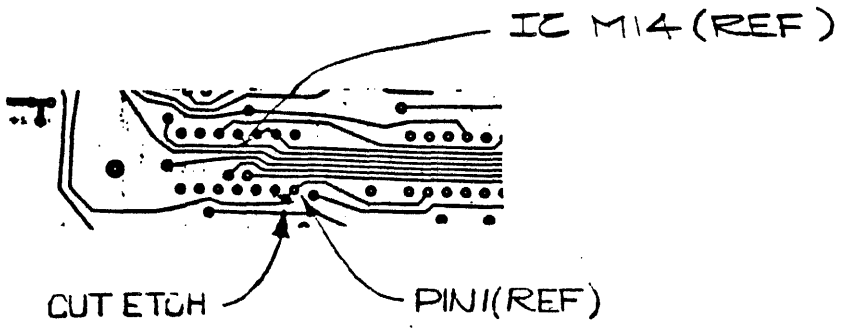

4. ON SOLDER SIDE CUT ETCH AT FEED THRU ABOVE IC M14 PIN 11 AS SHOWN:

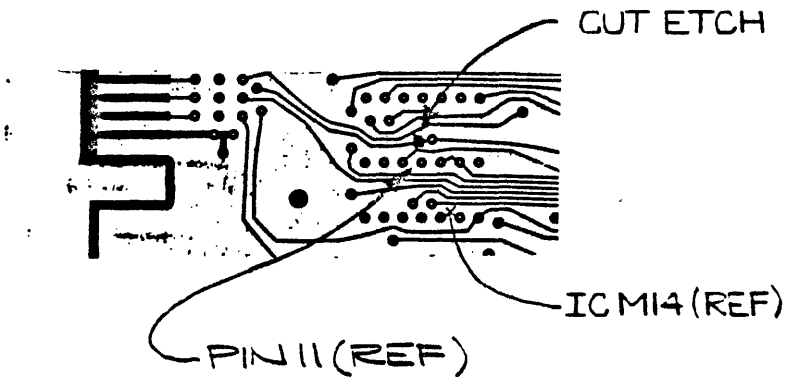

5. ADD WIRE P/N 53A0701-000 FROM T9-009 TO FEED THRU ON SOLDER SIDE.

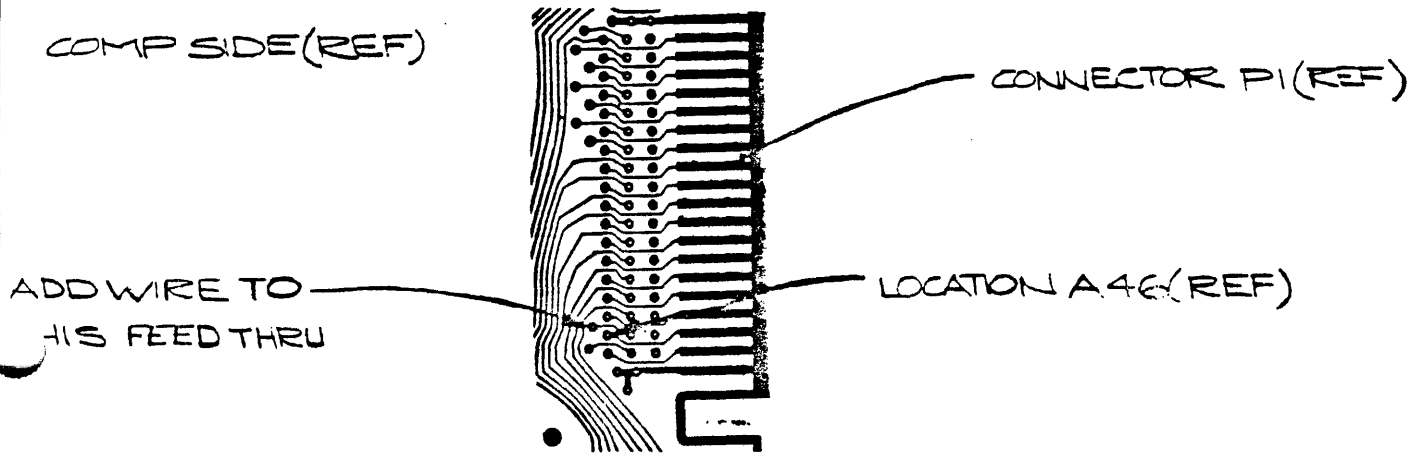

6. ADD WIRE P/N 53A0701-000 FROM T9-013 TO FEED THRU ON SOLDER SIDE.

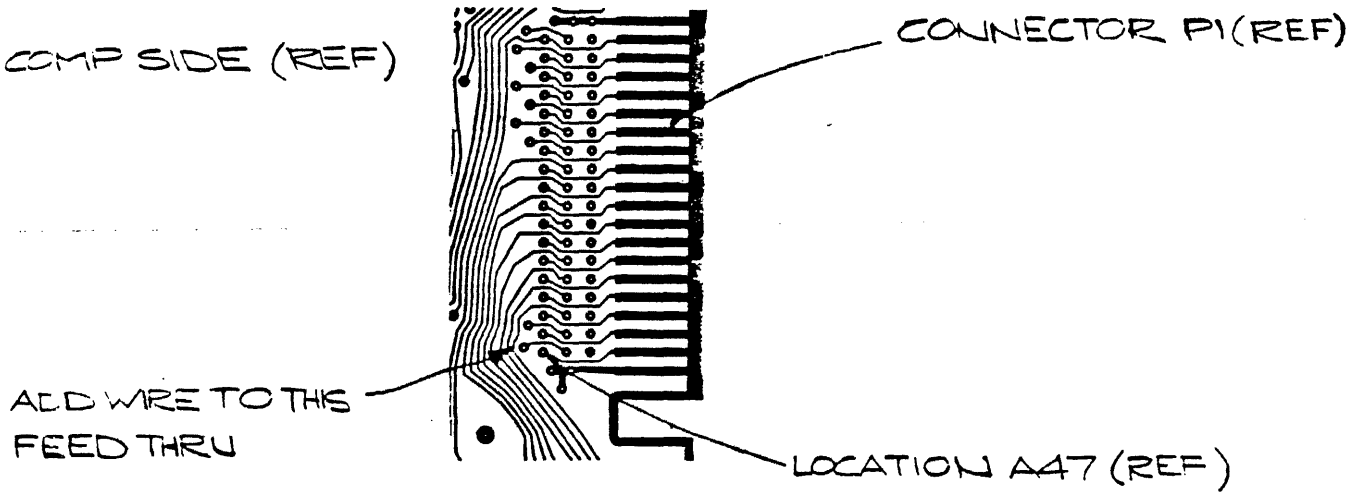

7. ON ~~COMP~~ SOLDER SIDE CUT ETCH AT ~~FEED THRU BY N14-007 AS SHOWN~~ N13-006.

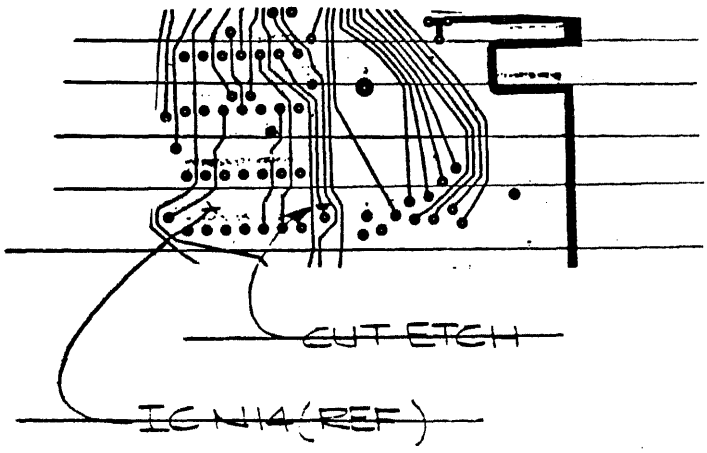

8. ON COMP SIDE CUT ETCH BELOW M14 PINS 6 & 7 AS SHOWN:

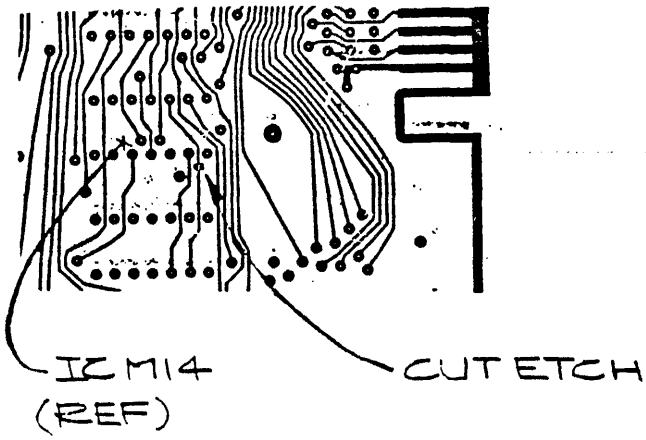

9. CUT ETCH AT M13-005 ON COMP SIDE.