EC 826380			PN 2597102
27MAY83			

001

(Entry Point A)

1.Bad card: A-A3S2 (95% probable)

---or---

2.Bad channel cable (5% probable)

- If you want to isolate a failing channel cable, see:

  Chart A (at the end of this MAP) - meter signals 13, 16

  Chart B (at the end of this MAP) - meter all signals

  Chart C (at the end of this MAP) - meter signal 60

(see note A)

---or---

3.Bad power distribution cables from ICLJ75 to A3 board.

- Use FLD YC905 to check the +5V supply.

(Entry Point B)

1.Bad card: A-A3S2 (95% probable)

---or---

2.Bad channel cable (5% probable)

- If you want to isolate a failing channel cable, see:

  Chart B (at the end of this MAP) - meter signal 43

  Chart C (at the end of this MAP) - meter signals 44, 45, 46, 55, 58, 59

(see note A)

(Step 001 continues)

MAP DESCRIPTION:

This MAP supplies the FRU isolation between the data communications controller card and the channel cables.

START CONDITIONS:

none

FRUs PARTIALLY TESTED:

A-A3S2, controller card

A-A3Y4, channel cable

A-A3Y5, channel cable

A-A3Y6, channel cable

© Copyright IBM Corp. 1983

(Step 001 continued)
(Entry Point C)
1.Bad card: A-A3S2 (95% probable)
---or---
2.Bad channel cable (5% probable)
- If you want to isolate a failing channel cable, see:
  Chart A (at the end of this MAP) - meter signal 4

(see note A)

(Entry Point D)
1.Bad card: A-A3S2 (95% probable)
---or---
2.Bad channel cable (5% probable)
- If you want to isolate a failing channel cable, see:
  Chart A (at the end of this MAP) - meter signal 11
  Chart C (at the end of this MAP) - meter signals 49, 50

(see note A)

(Entry Point E)
1.Bad card: A-A3S2 (95% probable)
---or---
2.Bad channel cable (5% probable)
- If you want to isolate a failing channel cable, see:
  Chart A (at the end of this MAP) - meter signal 20
  Chart B (at the end of this MAP) - meter signal 41

(see note A)

(Entry Point F)
1.Bad card: A-A3S2 (95% probable)
---or---
2.Bad channel cable (5% probable)
- If you want to isolate a failing channel cable, see:
  Chart A (at the end of this MAP) - meter signal 18

(see note A)

(Entry Point G)
1.Bad card: A-A3S2 (95% probable)
---or---
2.Bad channel cable (5% probable)
- If you want to isolate a failing channel cable, see:
  Chart A (at the end of this MAP) - meter signal 8
  Chart C (at the end of this MAP) - meter signals 48, 62

(see note A)
(Step 001 continues)

Note A: Using the meter, and the charts, check the signals for opens from A-A1 to A-A3. If there is no A-A2 board installed, the channel cables take Path 'A' to the A-A3 board (see top of each chart). If there is an A-A2 board installed, then Path 'B' is used.

Note A: Using the meter, and the charts, check the signals for opens from A-A1 to A-A3. If there is no A-A2 board installed, the channel cables take Path 'A' to the A-A3 board (see top of each chart). If there is an A-A2 board installed, then Path 'B' is used.

(Step 001 continued)

(Entry Point H)

1.Bad card: A-A3S2 (95% probable)

---or---

2.Bad channel cable (5% probable)

- If you want to isolate a failing channel cable, see: Chart A (at the end of this MAP) - meter signal 21 (see note A)

(Entry Point I)

1.Bad card: A-A3S2 (95% probable)

---or---

2.Bad channel cable (5% probable)

- If you want to isolate a failing channel cable, see: Chart B (at the end of this MAP) - meter signal 30 (see note A)

Note A: Using the meter, and the charts, check the signals for opens from A-A1 to A-A3. If there is no A-A2 board installed, the channel cables take Path 'A' to the A-A3 board (see top of each chart). If there is an A-A2 board installed, then Path 'B' is used.

Chart A

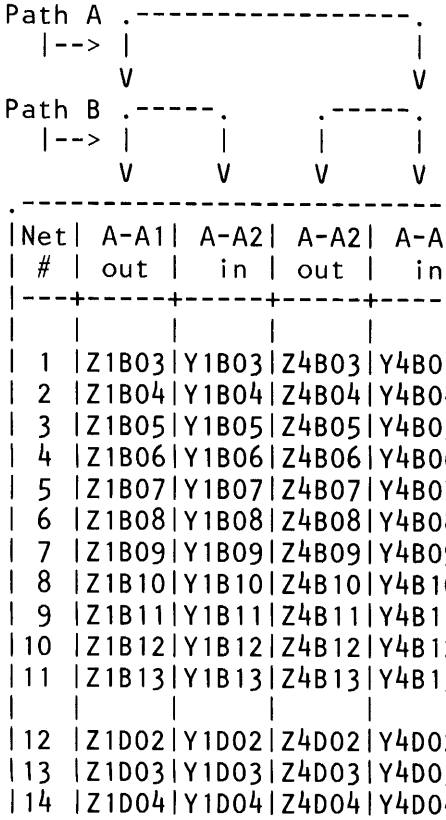

Net #	A-A1 out	A-A2 in	A-A2 out	A-A3 in
1	Z1B03	Y1B03	Z4B03	Y4B03
2	Z1B04	Y1B04	Z4B04	Y4B04
3	Z1B05	Y1B05	Z4B05	Y4B05
4	Z1B06	Y1B06	Z4B06	Y4B06
5	Z1B07	Y1B07	Z4B07	Y4B07
6	Z1B08	Y1B08	Z4B08	Y4B08
7	Z1B09	Y1B09	Z4B09	Y4B09
8	Z1B10	Y1B10	Z4B10	Y4B10
9	Z1B11	Y1B11	Z4B11	Y4B11
10	Z1B12	Y1B12	Z4B12	Y4B12
11	Z1B13	Y1B13	Z4B13	Y4B13
12	Z1D02	Y1D02	Z4D02	Y4D02
13	Z1D03	Y1D03	Z4D03	Y4D03
14	Z1D04	Y1D04	Z4D04	Y4D04

(Step 001 continues)

Chart B

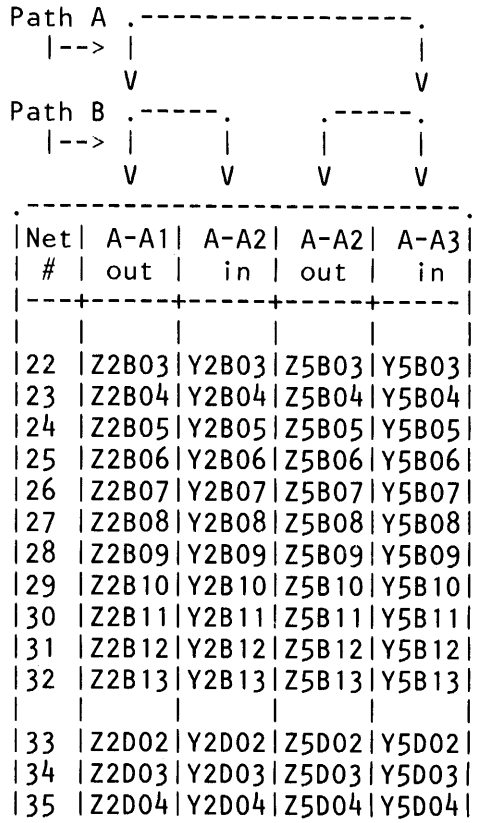

Net #	A-A1 out	A-A2 in	A-A2 out	A-A3 in
22	Z2B03	Y2B03	Z5B03	Y5B03
23	Z2B04	Y2B04	Z5B04	Y5B04
24	Z2B05	Y2B05	Z5B05	Y5B05
25	Z2B06	Y2B06	Z5B06	Y5B06
26	Z2B07	Y2B07	Z5B07	Y5B07
27	Z2B08	Y2B08	Z5B08	Y5B08
28	Z2B09	Y2B09	Z5B09	Y5B09
29	Z2B10	Y2B10	Z5B10	Y5B10
30	Z2B11	Y2B11	Z5B11	Y5B11
31	Z2B12	Y2B12	Z5B12	Y5B12
32	Z2B13	Y2B13	Z5B13	Y5B13
33	Z2D02	Y2D02	Z5D02	Y5D02
34	Z2D03	Y2D03	Z5D03	Y5D03
35	Z2D04	Y2D04	Z5D04	Y5D04

(Step 001 continues)

(Step 001 continued)

15	Z1D05	Y1D05	Z4D05	Y4D05
16	Z1D06	Y1D06	Z4D06	Y4D06
17	Z1D07	Y1D07	Z4D07	Y4D07
18	Z1D09	Y1D09	Z4D09	Y4D09
19	Z1D10	Y1D10	Z4D10	Y4D10
20	Z1D11	Y1D11	Z4D11	Y4D11
21	Z1D12	Y1D12	Z4D12	Y4D12

(Step 001 continued)

36	Z2D05	Y2D05	Z5D05	Y5D05
37	Z2D06	Y2D06	Z5D06	Y5D06
38	Z2D07	Y2D07	Z5D07	Y5D07
39	Z2D09	Y2D09	Z5D09	Y5D09
40	Z2D10	Y2D10	Z5D10	Y5D10
41	Z2D11	Y2D11	Z5D11	Y5D11
42	Z2D12	Y2D12	Z5D12	Y5D12
43	Z2D13	Y2D13	Z5D13	Y5D13

Chart C

Path A --> V

Path B --> V V V V

Net #	A-A1 out	A-A2 in	A-A2 out	A-A3 in
44	Z3B03	Y3B03	Z6B03	Y6B03
45	Z3B04	Y3B04	Z6B04	Y6B04
46	Z3B05	Y3B05	Z6B05	Y6B05
47	Z3B06	Y3B06	Z6B06	Y6B06
48	Z3B07	Y3B07	Z6B07	Y6B07
49	Z3B08	Y3B08	Z6B08	Y6B08
50	Z3B09	Y3B09	Z6B09	Y6B09
51	Z3B10	Y3B10	Z6B10	Y6B10
52	Z3B11	Y3B11	Z6B11	Y6B11
53	Z3B12	Y3B12	Z6B12	Y6B12
54	Z3B13	Y3B13	Z6B13	Y6B13
55	Z3D02	Y3D02	Z6D02	Y6D02
56	Z3D03	Y3D03	Z6D03	Y6D03
57	Z3D04	Y3D04	Z6D04	Y6D04
58	Z3D05	Y3D05	Z6D05	Y6D05
59	Z3D06	Y3D06	Z6D06	Y6D06
60	Z3D07	Y3D07	Z6D07	Y6D07
61	Z3D09	Y3D09	Z6D09	Y6D09
62	Z3D10	Y3D10	Z6D10	Y6D10
63	Z3D11	Y3D11	Z6D11	Y6D11

(Step 001 continues)

(Step 001 continued)

64	Z3D12	Y3D12	Z6D12	Y6D12
65	Z3D13	Y3D13	Z6D13	Y6D13

ENTRY POINTS

FROM	ENTER THIS MAP		
MAP NUMBER	ENTRY POINT	PAGE NUMBER	STEP NUMBER
8106	A	1	001
8131	B	3	009
8132	C	3	009
8133	B	3	009
8133	C	3	009

EXIT POINTS

EXIT THIS MAP		TO	
PAGE NUMBER	STEP NUMBER	MAP NUMBER	ENTRY POINT
3	008	0101	A
2	003	0500	A

001

(Entry Point A)

- Connect the meter from the pins in chart A of this MAP to return (A-A3L2D08) and compare the readings to the low limits in chart A.

MAP DESCRIPTION:
This MAP is used to instruct the CE/CSR during periods when the machine has to be powered down.

START CONDITIONS:
An error has been found.

FRUs PARTIALLY TESTED:
None

Chart A

Voltage	A-A3 board	Low limit
+5V	L2D03	+4.5V
+8.5V	L2B11	+7.6V
+1.7V	S2B05	+1.5V
-5V	L2B06	-4.5V
-12V	U2B05	-10.8V
Return	L2D08	X

Does the meter read more than the low limit for each level?

Y **N**

3 2
A B

© Copyright IBM Corp. 1983

002

- Connect the meter from the pins in chart B of this MAP to ground and compare the readings to the low limits in chart A.

Chart B

Voltage	ICLJ75 pin	Low limit
+5V	7-10	+4.5V
+8.5V	12	+7.6V
+1.7V	1,4	+1.5V
-5V	5	-4.5V
-12V	6	-10.8V
Return	E14	X

Does the meter read more than the low limit for each level?

Y N

003

Go To Map 0500, Entry Point A.

004

- See FLD YC905.

Are all minibus connectors correctly installed on the A-A3 board?

Y N

005

- Select mode 6.
- Press the Power key (power off).
- Check all connectors for correct locations and connections.

006

Bad power distribution cables or bad connection at ICLJ75.

- Tighten all screws at ICLJ75.
- Return to Entry Point A and repeat measurements after fix.

007

- Select mode 6.
- Press the Power key (power off).

- Remove all of the communications adapter cards (if installed) from board sockets 01A-A3N2,P2,Q2,R2.

- Record each cards' location because they must be installed in their original locations later.

- Press the Power key (power on).
- Select mode E.
- Enter FF00.
- Load with diskette DIAG21.
- Wait approximately 1 minute for the system to CSIPL.

Did the Main Option Menu appear on the console?

Y N

008

This path cannot be taken unless the CSIPL sequence can be completed.

Go To Map 0101, Entry Point A.

009

- Select 'MDI Special' option.
- Select any communications line (1-4)
- For the first 'IDID' only, enter 8131.
- For the first 'NNN' only, enter 001.
- Press Enter.
- Follow the MDI instructions.

(Entry Point B)

- Select mode 6.
- Press the Power key (power off).

- Install one communications adapter card back into its original location.

- Press the Power key (power on).
- Select mode E.
- Enter FF00.
- Load with diskette DIAG21.
- Wait approximately 1 minute for the system to

(Step 009 continues)

(Step 009 continued)

CSIPL.

- Select 'MDI Special' option.
- Select any communications line (1-4)
- For the first 'IDID' only, enter 8132.
- For the first 'NNN' only, enter 001.
- Press Enter.
- Follow the MDI instructions.

(Entry Point C)

- Select mode 6.
- Press the Power key (power off).

- Install one more communications adapter card back into its original location.

- Press the Power key (power on).
- Select mode E.
- Enter FF00.
- Load with diskette DIAG21.
- Wait approximately 1 minute for the system to CSIPL.

- Select 'MDI Special' option.
- Select any communications line (1-4)
- For the first 'IDID' only, enter 8133.
- For the first 'NNN' only, enter 001.
- Press Enter.
- Follow the MDI instructions.

ENTRY POINTS

FROM	ENTER THIS MAP		
MAP NUMBER	ENTRY POINT	PAGE NUMBER	STEP NUMBER
0114	A	1	001
0116	A	1	001
0199	A	1	001

EXIT POINTS

EXIT THIS MAP		TO	
PAGE NUMBER	STEP NUMBER	MAP NUMBER	ENTRY POINT
2	004	0101	A
12	053	0101	A
4	014	0101	A
7	028	0101	A
13	058	0500	A

001
(Entry Point A)

MAP DESCRIPTION:
This MAP instructs the CE to run the MDI tests for data communications (MLCA).

START CONDITIONS:
A data communications wrap error occurred or communications not working on one or more lines.

FRUs PARTIALLY TESTED:
A-A3S2, A-A3N2, A-A3P2, A-A3Q2, A-A3R2, A-A1K (if installed)

Is the system available for dedicated maintenance?
Y N

002
- Run concurrent diagnostics.
- See maintenance manual section 30-410.

© Copyright IBM Corp. 1983

003

- If you have not already done so:
  - Power on and CSIPL from DIAG21 diskette.
  - Press the Power key (power on).
  - Select mode E.
  - Enter 0000.
  - Insert diskette DIAG21.
  - Press the Load key.
  - Wait approximately 3 minutes for the system to CSIPL.

Did the system IPL (DCP option menu or wrap errors displayed on the system console)?

Y N

004

This path cannot be taken unless the CSIPL sequence can be completed.

Go To Map 0101, Entry Point A.

005

Are there any communications SRC's (example: C8xx)?

Y N

006

Go to Page 3, Step 011, Entry Point D.

007

Is the SRC a C80x?

Y N

008

Is there a C810 or C811 SRC?

Y N

009

Is this a new installation?

Y N

010
(Entry Point E)

Is there more than one communications SRC (example: C81x, C82x)?
Y N

011
(Entry Point D)
- Select MDI MAPs option.
- Select communications line (1-4) or SLCA for the failing communications line
  (If X.25 is configured, be sure to run the MDIs on both lines of the X.25 pair).
- Select option 1 (complete communications diagnostics).
- Follow the MDI instructions to fix the failing area.

012
Are there any C8x7 SRC's?
Y N

013
(Entry Point H)
- Select mode 6.
- Press the Power key (power off).
- Remove all communication adapter cards from board positions:
  A-A3R2 (Line 1)
  A-A3Q2 (Line 2)
  A-A3P2 (Line 3)
  A-A3N2 (Line 4) if installed.
- Reinstall one of the adapter cards (See Note 1).
- Record each card's location because they must be installed in their original locations later (see Note 2).

- Press the Power key (power on).
- Select mode E.
- Enter FF00.
- Insert diskette DIAG21.
- Press the Load key.
- Wait approximately two minutes for the system to CSIPL.

(Step 013 continues)

Note 1: There is an error affecting more than one communications line. Isolation will be performed by removing all communications lines installed and installing cards one at a time.

Note 2: Jumpering options on the adapter cards cause them to operate in different modes. Card swapping without changing the jumpering options could cause a hardware error.

(Step 013 continued)
Did the Main Option Menu appear on the console?
Y N

014
This path cannot be taken unless the CSIPL sequence can be completed.
Go To Map 0101, Entry Point A.

015
- Select MDI MAPs option.
- Select communications line (1-4) for the communications adapter card just installed (see Note 3).
- Select 'Option 2' for communications line hardware diagnostics.
- If the MDIs fail, answer 'NO' to the following question and ignore any instructions or FRU replacements on the system console. (see Note 3A)

Did the tests run OK?
Y N

016
Is there more than one line of communications installed in this system?
Y N

017
- Probe the following pin:

```
Up   Light: On or flashing
Down Light: On or flashing
```

A-A3U1D13 (1.02 MS Clock).
Are the lights correct?
Y N

018
Go to Page 6, Step 022, Entry Point G.

Note 3: A-A3R2 = Communications Line 1
A-A3Q2 = Communications Line 2
A-A3P2 = Communications Line 3
A-A3N2 = Communications Line 4

Note 3A: Any external wrap prompts, or operator panel communications indicator prompts indicate that the MDIs ran OK.

7 5 5
G H J

019

Bad card:
Communication Adapter Card A-A3N2, P2, Q2, or R2 (only one of which is installed)
---or---
Bad card:
A-A3S2.

020

- Select mode 6.
- Press the Power key (power off).
- Remove the failing communications adapter card just tested.
- Install another communications adapter card into its original board position.
- Press the Power key (power on).
- Select mode E.
- Enter FF00.
- Insert diskette DIAG21.
- Press the Load key.
- Wait approximately two minutes for the system to CSIPL.
- Select MDI MAPs option.
- Select communications line (1-4) for the communications adapter card just installed (see Note 3).
- Select 'option 2' for communications hardware diagnostics.
- If the MDIs fail, answer 'NO' to the following question and ignore any instructions or FRU replacements on the system console (see Note 3A).

Did the tests run OK?

Y N

6 6
K L

Note 3A: Any external wrap prompts, or operator panel comm indicator prompts indicate that the MDIs ran OK.

021

- Probe the following pin:

```
Up   Light: On or flashing
Down Light: On or flashing
```

A-A3U1D13 (1.02 MS Clock).

Are the lights correct?

Y N

022

(Entry Point G)

Is there a logic card in the A-A1L2 socket?

Y N

023

Bad card:
A-A1N2
---or---
Bad channel cable A-A1 to A-A3 board.
---or---
Bad card:
A-A3U3.

024

Bad card:
A-A1L2
---or---
Bad channel cable A-A1 to A-A3 board.
---or---
Bad card:
A-A3U3.

025

Bad card:
A-A3S2.

026

The first communications adapter card reinstalled and tested was bad.

027

(Entry Point B)

- Select mode 6.
- Press the Power key (power off).
- Install any one of the communications adapter cards removed earlier into its original location (See Note 4).
- Press the Power key (power on).
- Select mode E.
- Enter FF00.
- Insert diskette DIAG21.
- Press the Load key.
- Wait approximately two minutes for the system to CSIPL.

Did the Main Option Menu appear on the console?

Y N

028

This path cannot be taken unless the CSIPL sequence can be completed.

Go To Map 0101, Entry Point A.

029

- Select MDI MAPs option.
- Select communications line (1-4) for the communications adapter card just installed (see Note 3).
- Select 'Option 2' for communications line hardware diagnostics (see Note 3A).

Did the tests run OK?

Y N

030

The communications adapter card just tested is bad. Exchange it.

031

Have you reseated and run MDIs on all communication adapter cards removed earlier?

Y N

032

Go to Step 027, Entry Point B.

Note 4: Install one communications adapter card at a time and run MDIs. When the failing card is installed, the MDIs will fail. If the MDIs ran correctly on all of the adapter cards then one of the cards was unseated.

Note 3: A-A3R2 = Communications Line 1
A-A3Q2 = Communications Line 2
A-A3P2 = Communications Line 3
A-A3N2 = Communications Line 4

Note 3A: Any external wrap prompts, or operator panel communications indicator prompts indicate that the MDIs ran OK.

033
The MDIs ran correctly on all communications lines. One of the adapter cards was unseated or there is an intermittent problem.
- See the intermittent FRU replacement MAP 3009.
- Run MDIs on all installed lines again to verify that all is OK.

034
Go to Page 3, Step 011, Entry Point D.

035
- Check the device address switches on the failing line or lines indicated by the wrap errors.

Each communications adapter card must have a unique device address (see chart 1).

C H A R T 1

Device address switches 5 & 6 on communications adapter card

Device Address Selection

5	6	Device Address	
Off	Off	10	A-A3R2 (line 1)
Off	On	20	A-A3Q2 (line 2)
On	On	40	A-A3P2 (line 3)
On	Off	80	A-A3N2 (line 4)

Are the switches set correctly?
Y N

036
- Set switches.

9
N

037
- Check the switches in chart 2.

Chart 2

Configuration switches on communications adapter card	
1	always 'off'
4	always 'off'

Are these switches set correctly?
Y N

038
- Set them both 'off'.

039
Go to Page 3, Step 010, Entry Point E.

040
- If the machine is not powered down, do so now.
- Select mode 6.
- Press the Power key (power off).
- Reseat cards A-A3S2, A-A3N2, A-A3P2 A-A3Q2, A-A3R2 (if installed).
- Reseat cables A-A3Y4, A-A3Y5, A-A3Y6
- Press the Power key (power on).
- Select mode E.
- Enter 0000.
- Insert diskette DIAG21.
- Press the Load key.
- Wait approximately 3 minutes for the system to CSIPL.

Is there still a C810 or C811 SRC?
Y N

041
- One of the logic cards or cables was unseated.
- Run communications MDI MAPs on all lines installed to verify data communications is operating.

042

- Select mode 6.
- Press the Power key (power off).
- Remove all communications adapter cards from board positions: A-A3N2, A-A3P2, A-A3Q2, A-A3R2 (if installed).
- Record each card's location since they must be installed in their original locations later (See Note 2).

- Press the Power key (power on).
- Select mode E.
- Enter 0000.
- Insert diskette DIAG21.
- Press the Load key.
- Wait approximately 3 minutes for the system to CSIPL.

Is there still a C810 or C811 SRC?

Y N

043

(Entry Point C)

- Select mode 6.
- Press the Power key (power off).
- Install one of the communications adapter cards into its original location: A-A3R2 (Line 1), or A-A3Q2 (Line 2), or A-A3P2 (Line 3), or A-A3N2 (Line 4).

- Press the Power key (power on).
- Select mode E.
- Enter 0000.
- Insert diskette DIAG21.
- Press the Load key.
- Wait approximately 3 minutes for the system to CSIPL.

Is there a C810 or C811 SRC?

Y N

044

Go to Step 043, Entry Point C.

Note 2: Jumpering options on the adapter cards cause them to operate in different modes. Card swapping without changing the jumpering options could cause a hardware error.

045

Did the C810 or C811 SRC appear again when the first communications adapter card was reinstalled?

Y N

046

The last communications adapter card plugged in is bad.

047

Are there communications adapter cards to be tested?

Y N

048

Bad communications adapter card

---or---

Bad card:
A-A3S2

---or---

Bad cable:
A-A3Y4, Y5, Y6.

049

- Check the other communications adapter cards using the plugging procedure at Entry Point C.

Does the C810 or C811 SRC occur with only one of the adapter cards (see Note 5)?

Y N

050

Bad card:
A-A3S2

---or---

Bad cable:
A-A3Y4, Y5, Y6.

Note 5: If only one communications adapter card causes a C810 or C811 SRC and the others do not, then that adapter card is suspect.

If any communications adapter card installed in it's original location causes the wrap error to occur, then the controller card (A-A3S2) or cable (A-A3Y4, Y5, Y6) are suspect.

051
The single adapter card causing the C810 or C811 SRC is bad.

052
- Select mode 6.
- Press the Power key (power off).
- Reinstall communications adapter cards into their original locations (See Note 3).
- Press the Power key (power on).
- Select mode E.
- Enter FF00.
- Insert diskette DIAG21.
- Press the Load key.
- Wait approximately two minutes for the system to CSIPL.

Did the DCP Option Menu appear on the console?
Y N

053
This path cannot be taken unless the CSIPL sequence can be completed.
Go To Map 0101, Entry Point A.

054
(Entry Point F)
- Connect the meter from the pins in Chart A of this MAP to return (A-A3L2D08) and compare the readings to the low limits in Chart A.

Note 3: A-A3R2 = Communications Line 1
A-A3Q2 = Communications Line 2
A-A3P2 = Communications Line 3
A-A3N2 = Communications Line 4

Chart A

Voltage	A-A3 board	Low limit
+5V	L2D03	+4.5V
+8.5V	L2B11	+7.6V
+1.7V	S2B05	+1.5V
-5V	L2B06	-4.5V
-12V	U2B05	-10.8V
Return	L2D08	X

Note: If -5V only is missing from the A-A3 board, that may cause the communications controller card (A-A3S2, if installed) to be bad.

(Step 054 continues)

(Step 054 continued)
Does the meter read more than the low limit for each level?
Y N

055
- See FLD page YC905.

Are all the A3 board minibus connectors correctly installed?
Y N

056
- Install them in the correct location.

057
- Select mode 6.
- Press the Power key (power off).
- Unplug the A3 board DC distribution cable from power supply connector J75.
- Plug remote sense jumper into the top row of the J75 connector on the power supply.
- Press the Power key (power on).
- Connect the meter from the pins in Chart B of this MAP to ground and compare the readings to the low limits in Chart B.

Chart B

Voltage	J75 Power Supply Connector pin	Low limit
+5V	7-10	+4.5V
+8.5V	12	+7.6V
+1.7V	1,4	+1.5V
-5V	5	-4.5V
-12V	6	-10.8V
Return	E14	X

Note: If -5V only is missing from the A-A3 board, that may cause the communications controller card (A-A3S2, if installed) to be bad.

Does the meter read more than the low limit for each level?
Y N

058
Go To Map 0500, Entry Point A.

059
Bad DC distribution cable from power supply L (A3 board) to the A-A3 board.

060
Is there a C810 SRC?
Y N

061
Bad card:
A-A3S2.

062
Bad card:
A-A3S2 (95 percent probable)
---or---
Bad cable:
A-A3Y4, Y5 or Y6 (5 percent probable) (see Note 6).

Note 6: Although the card or cables may cause the same symptoms, the logic card A-A3S2 should be suspect before the cables. If you want to check the cables for continuity, see charts A, B, C at the end of MAP 3001 for cable probe chart information.

063
Go to Page 3, Step 011, Entry Point D.

ENTRY POINTS

FROM	ENTER THIS MAP		
MAP NUMBER	ENTRY POINT	PAGE NUMBER	STEP NUMBER
8112	A	1	001
8113	B	2	001
8118	A	1	001
8136	F	3	001
8137	A	1	001
8140	C	2	001
8141	C	2	001
8142	C	2	001
8143	C	2	001
8181	E	3	001

MAP DESCRIPTION:
This MAP describes how to install the diagnostic wrap card on the communications logic board for SLCA line 1 problems.

START CONDITIONS:
None

FRUs PARTIALLY TESTED:
A-A3R2, A-A3M2 (MLCA LINE 1)

001
(Entry Point A)
- Select mode 6.
- Press the Power key (power off).
- Disconnect cable from A-A3A2 (see note 1).
- Install wrap card p/n 4233787 (raw card p/n 4233786), end 'A', into A-A3A2.
- Press the Power key (power on).

Note 1: If it is necessary to temporarily remove some of the logic cards to perform this function, ensure that they are installed into their original locations when these steps are completed.

© Copyright IBM Corp. 1983

- Select mode E.
- Enter FF00.
- Insert diskette DIAG21.
- Press the Load key.
- Wait for the Main Menu display and select MDI MAPs.
- Select line 1 as the failing data communications line.
- Select the 'Error MAP 1' option.
- Follow the MDI instructions to fix the failing area.

(Entry Point B)
- Select mode 6.
- Press the Power key (power off)
- Remove wrap card p/n 4233787 (raw card p/n 4233786), from A-A3A2 (see note 2).
- Reinstall the cable into A-A3A2.

Go To Entry Point D.

(Entry Point C)
- Select Mode 6.
- Press the Power key (power off).

Go To Entry Point D.

(Entry Point D)
- Remove 2-wide card from A-A3M2.
  (Note: If end 'A' of the wrap card is plugged in by mistake, a power check will occur).
- Install wrap card p/n 4233787 (raw card p/n 4233786), end 'B', into A-A3M2.

- Press the Power key (power on).
- Select mode E.
- Enter FF00.
- Insert diskette DIAG21.
- Press the Load key.
- Wait for the Main Menu display and select MDI MAPs.
- Select line 1 as the failing

Note 2: If it is necessary to temporarily remove some logic cards to perform this function, ensure that they are installed into their original locations when these steps are completed.

data communications line.
- Select the 'Error MAP 2' option.
- Follow the MDI instructions to fix the failing area.

(Entry Point E)
- Select mode 6.
- Press the Power key (power off).
- Remove the logic card from A-A3M2.
  (Note: If end A of the wrap card is plugged in by mistake, a power check will occur.)

- Install wrap card p/n 4233787 (raw card p/n 4233786), into A-A3L2.

- Press the Power key (power on).
- Select mode E.
- Enter FF00.
- Insert diskette DIAG21.
- Press the Load key.
- Wait for the Main Menu display and select MDI MAPs.
- Select line 2 as the failing data communications line.
- Select the 'Error MAP 2' option.
- Follow the MDI instructions to fix the failing area.

(Entry Point F)
- Select mode 6.
- Press the Power key (power off).
- Remove the logic card from A-A3M2.

Install the following board jumpers:

A-A3M2B02 to A-A3M2B13
A-A3M2B05 to A-A3M2D10
A-A3M2D02 to A-A3M2D13
A-A3M2D04 to A-A3M2B10

- Press the Power key (power on).
- Select mode E.
- Enter FF00.
- Insert diskette DIAG21.
- Press the Load key.
- Wait for the Main Menu display and select MDI MAPs.
- Select line 1 as the failing data communications line.
- Select the 'Error MAP 2' option.
- Follow the MDI instructions to fix the failing area.

ENTRY POINTS			
FROM	ENTER THIS MAP		
MAP NUMBER	ENTRY POINT	PAGE NUMBER	STEP NUMBER
8112	A	1	001
8113	B	2	001
8118	A	1	001
8136	F	3	001
8137	A	1	001
8140	C	2	001
8141	C	2	001
8142	C	2	001
8143	C	2	001

MAP DESCRIPTION:
This MAP describes how to install the diagnostic wrap card on the communications logic board for SLCA line 2 problems.

START CONDITIONS:
None

FRUs PARTIALLY TESTED:
A-A3Q2, A-A3L2

001
(Entry Point A)
- Select mode 6.
- Press the Power key (power off).
- Disconnect cable from A-A3A3 (see note 1).
- Install wrap card p/n 4233787 (raw card p/n 4233786), end 'A', into A-A3A3.
- Press the Power key (power on).
- Select mode E.

Note 1: If it is necessary to temporarily remove some logic cards to perform this function, ensure that they are installed into their original locations when these steps are completed.

© Copyright IBM Corp. 1983

- Enter FF00.
- Insert diskette DIAG21.
- Press the Load key.
- Wait for the Main Menu display and select MDI MAPs.
- Select line 2 as the failing data communications line.
- Select the 'Error MAP 1' option.
- Follow the MDI instructions to fix the failing area.

(Entry Point B)
- Select mode 6.
- Press the Power key (power off)
- Remove wrap card p/n 4233787 (raw card p/n 4233786), from A-A3A3 (see note 2).
- Reinstall the cable into A-A3A3.

Go To Entry Point D.

(Entry Point C)
- Select Mode 6.
- Press the Power key (power off).

Go To Entry Point D.

(Entry Point D)
- Remove 2-wide card from A-A3L2.
  (Note: If end 'A' of the wrap card is plugged in by mistake, a power check will occur).
- Install wrap card p/n 4233787 (raw card p/n 4233786), end 'B', into A-A3L2.

- Press the Power key (power on).
- Select mode E.
- Enter FF00.
- Insert diskette DIAG21.
- Press the Load key.
- Wait for the Main Menu display and select MDI MAPs.
- Select line 2 as the failing data communications line.

Note 2: If it is necessary to temporarily remove some logic cards to perform this function, ensure that they are installed into their original locations when these steps are completed.

- Select the 'Error MAP 2' option.
- Follow the MDI instructions to fix the failing area.

(Entry Point F)
- Select mode 6.
- Press the Power key (power off).
- Remove the logic card from A-A3L2.

- Install the following board jumpers:

  A-A3L2B02 to A-A3L2B13
  A-A3L2B05 to A-A3L2D10
  A-A3L2D02 to A-A3L2D13
  A-A3L2D04 to A-A3L2B10

- Press the Power key (power on).
- Select mode E.
- Enter FF00.
- Insert diskette DIAG21.
- Press the Load key.
- Wait for the Main Menu display and select MDI MAPs.
- Select line 2 as the failing data communications line.
- Select the 'Error MAP 2' option.
- Follow the MDI instructions to fix the failing area.

ENTRY POINTS			
FROM	ENTER THIS MAP		
MAP NUMBER	ENTRY POINT	PAGE NUMBER	STEP NUMBER
8112	A	1	001
8113	B	2	001
8118	A	1	001
8136	F	3	001
8137	A	1	001
8140	C	2	001
8141	C	2	001
8142	C	2	001
8143	C	2	001

MAP DESCRIPTION:
This MAP describes how to install the diagnostic wrap card on the communications logic board for SLCA line 3 problems.

START CONDITIONS:
None

FRUs PARTIALLY TESTED:
A-A3P2, A-A3M4

001
(Entry Point A)
- Select mode 6.
- Press the Power key (power off).
- Disconnect cable from A-A3A4 (see note 1).
- Install wrap card p/n 4233787, end 'A', into A-A3A4.
- Press the Power key (power on).
- Select mode E.
- Enter FF00.

Note 1: If it is necessary to temporarily remove some logic cards to perform this function, ensure that they are installed into their original locations when these steps are completed.

© Copyright IBM Corp. 1983

- Insert diskette DIAG21.
- Press the Load key.
- Wait for the Main Menu display and select MDI MAPs.
- Select line 3 as the failing data communications line.
- Select the 'Error MAP 1' option.
- Follow the MDI instructions to fix the failing area.

(Entry Point B)
- Select mode 6.
- Press the Power key (power off)
- Remove wrap card p/n 4233787, from A-A3A4 (see note 2).
- Reinstall the cable into A-A3A4.

Go To Entry Point D.

(Entry Point C)
- Select mode 6.
- Press the Power key (Power off).

Go To Entry Point D.

(Entry Point D)
- Remove 2-wide card from A-A3M4.
  (Note: If end 'A' of the wrap card is plugged in by mistake, a power check will occur.)
- Install wrap card p/n 4233787, end 'B', into A-A3M4.
- Press the Power key (power on).
- Select mode E.
- Enter FF00.
- Insert diskette DIAG21.
- Press the Load key.
- Wait for the Main Menu display and select MDI MAPs.
- Select line 3 as the failing data communications line.
- Select the 'Error MAP 2' option.
- Follow the MDI instructions to fix the failing area.

Note 2: If it is necessary to temporarily remove some logic cards to perform this function, ensure that they are installed into their locations when these steps are completed.

(Entry Point E)
- Select mode 6.
- Press the Power key (power off).
- Remove the logic card from A-A3M4.
  (Note: If end A of the wrap card is
  plugged in by mistake, a power check
  will occur.)

- Install wrap card p/n 4233787, end 'B'
  into A-A3L4.

- Press the Power key (power on).
- Select mode E.
- Enter FF00.
- Insert diskette DIAG21.
- Press the Load key.
- Wait for the Main Menu display and
  select MDI MAPs.
- Select line 4 as the failing data
  communications line.
- Select the 'Error MAP 2' option.
- Follow the MDI instructions to fix
  the failing area.

(Entry Point F)
- Select mode 6.
- Press the Power key (power off).
- Remove the logic card from A-A3M4.

- Install the following board jumpers:

  A-A3M4B02 to A-A3M4B13
  A-A3M4B05 to A-A3M4D10
  A-A3M4D02 to A-A3M4D13
  A-A3M4D04 to A-A3M4B10

- Press the Power key (power on).
- Select mode E.
- Enter FF00.
- Insert diskette DIAG21.
- Press the Load key.
- Wait for the Main Menu display and

select MDI MAPs.
- Select line 3 as the failing data communications line.
- Select the 'Error MAP 2' option.
- Follow the MDI instructions to fix the failing area.

ENTRY POINTS

FROM	ENTER THIS MAP		
MAP NUMBER	ENTRY POINT	PAGE NUMBER	STEP NUMBER
8112	A	1	001
8113	B	2	001
8118	A	1	001
8136	F	3	001
8137	A	1	001
8140	C	2	001
8141	C	2	001
8142	C	2	001
8143	C	2	001
8152	C	2	001

MAP DESCRIPTION:
This MAP describes how to install the diagnostic wrap card on the communications logic board for SLCA line 4 problems.

START CONDITIONS:
None

FRUs PARTIALLY TESTED:
A-A3N2, A-A3L4

001
(Entry Point A)
- Select mode 6.
- Press the Power key (power off).
- Disconnect cable from A-A3A5 (see note 1).
- Install wrap card p/n 4233787, end 'A', into A-A3A5.
- Press the Power key (power on).
- Select mode E.

Note 1: If it is necessary to temporarily remove some logic cards to perform this function, ensure that they are installed into their original locations when they these steps are completed.

© Copyright IBM Corp. 1983

- Enter FF00.
- Insert diskette DIAG21.
- Press the Load key.
- Wait for the Main Menu display and select MDI MAPs.
- Select line 4 as the failing data communications line.
- Select the 'Error MAP 1' option.
- Follow the MDI instructions to fix the failing area.

(Entry Point B)
- Select mode 6.
- Press the Power key (power off)
- Remove wrap card p/n 4233787, from A-A3A5 (see note 2).
- Reinstall the cable into A-A3A5.

Go To Entry Point D.

(Entry Point C)
- Select mode 6.
- Press the Power key (Power off).

Go To Entry Point D.

(Entry Point D)
- Remove 2-wide card from A-A3L4.
  (Note: If end 'A' of the wrap card is plugged in by mistake, a power check will occur.)
- Install wrap card p/n 4233787, end 'B', into A-A3L4.
- Press the Power key (power on).
- Select mode E.
- Enter FF00.
- Insert diskette DIAG21.
- Press the Load key.
- Wait for the Main Menu display and select MDI MAPs.
- Select line 4 as the failing data communications line.
- Select the 'Error MAP 2' option.
- Follow the MDI instructions to fix the failing area.

Note 2: If it is necessary to temporarily remove some logic cards to perform this function, ensure that they are installed into their original locations when these steps are completed.

(Entry Point F)
- Select mode 6.
- Press the Power key (power off).
- Remove the logic card from A-A3L4.

- Install the following board jumpers:

  A-A3L4B02 to A-A3L4B13
  A-A3L4B05 to A-A3L4D10
  A-A3L4D02 to A-A3L4D13
  A-A3L4D04 to A-A3L4B10

- Press the Power key (power on).
- Select mode E.
- Enter FF00.
- Insert diskette DIAG21.
- Press the Load key.
- Wait for the Main Menu display and select MDI MAPs.
- Select line 4 as the failing data communications line.
- Select the 'Error MAP 2' option.
- Follow the MDI instructions to fix the failing area.

ENTRY POINTS			
FROM	ENTER THIS MAP		
MAP NUMBER	ENTRY POINT	PAGE NUMBER	STEP NUMBER
3021	A	1	001
3028	A	1	001
3054	A	1	001
3078	A	1	001

MAP DESCRIPTION:
This MAP instructs the CE/CSR to analyze the data communications error logs.
This MAP also instructs the CE/CSR to attempt to trap or obtain a trace of the transmitted and received data while attempting to duplicate an error condition.
This MAP also lists specific data communications failures that are assumed to have a feature visibility, some of them during a trap or trace.

START CONDITIONS:
This MAP should be run if no error is found or corrected using MDI diagnostics, hardmaps or the Intermittent Failure Replacement List, or if there is an intermittent failure that cannot be isolated.

LOGIC CARDS TESTED:
None

The problem at this point is expected to be in the data communications line.

- Print or record the data communications ERAP data stored in the system.

- See Sections 30-500 through 598 of the maintenance manual to identify what errors were recorded in the ERAP table.

© Copyright IBM Corp. 1983

- Look at the repeated errors and the errors that were recorded at the times the customers reported problems.

- See the list in this MAP of data communications failures that are assumed to have a failure visibility during a trap or trace.

- If time permits and if the system is available, and the failure to the customer is severe or needs to be corrected, run a trap or trace of the transmitted and received data. Run an online test (BSCA or SDLC) or a customer program in an attempt to duplicate the failing conditions or error. Analyze the trap data.

Data Communications Failures

Legend

Facility Type

D = Dial up
L = Leased

Failure Visibility

T = Trap/trace
R = Remote end type facility
W = Wrap test
I = Microcode found and indicated
S = Speaker

Modem

E = External IBM modem
I = Internal IBM modem
O = OEM modem

Acronyms

DTR = Data terminal ready
DSR = Data set ready
RTS = Request to send
CTS = Clear to send
XMIT = Transmit
RCV = Receive
OH = Off hook
CCT = Coupler cut through
SH = Switch hook
RI = Ring indicate

	Description	Facility Type	Modem	Failure Visibility
1	No DTR	D L	E I O	T W I
2	Drop DTR	D L	E I O	T W I
3	Hot DTR	D L	E I O	T W I
4	No DSR	D	E I O	T W I
5	Drop DSR	D L	E I O	T W I
6	No RTS	D L	E I O	T W I
7	Hot RTS	D L	E I O	T W I
8	Drop RTS	D L	E I O	T W I
9	No CTS	D L	E I O	T W I
10	Hot CTS	D L	E I O	T W I
11	Drop CTS	D L	E I O	T W I
12	Wrong CTS delay	D L	E I O	T R
13	No RI pulses (AA)	D	E I O	T W I
14	Hot RI	D	E I O	T W I
15	No internal xmit Or rcv clock	D L	E I O	W I
16	No external xmit Or rcv clock	D L	E I O	W I
17	Failing xmit or rcv clock pulses	D L	E I O	W I
18	No answer tone	D	E I O	T R
19	Hot answer tone	D	E I O	R
20	No coupler sh transition	D	E I O	T I
21	No CCT (coupler)	D	E I O	T W I
22	No coupler power	D	E I O	W I
23	No OH from modem	D	E I O	W I
24	Coupler cutting Xmit data	D L	E I O	T R
25	Rcv data cut By DE coupler	D L	E I O	T R
26	No xmit data to modem	D L	E I O	T R W I S
27	No rcv data from modem	D L	E I O	T W I S

28	Disconnected coupler cable	D	L	E	I	O				I	S
29	Wrong type coupler	D	L	E	I	O					
30	Disconnecting modem cable	D	L	E	I	O					S
31	Local loop hi-freq roll off (coupler)	D		E	I	O		T	R		S
32	Open local loop (coupler to telco office)	D		E	I	O		T	R		S
33	Impulse noise hits on line	D	L	E	I	O		T	R	I	S
34	White noise on telco line	D	L	E	I	O		T	R	I	
35	Phase jitter	D	L	E	I	O		T	R	I	
36	Line distortion (freq amplitude, etc.)	D	L	E	I	O			R	I	
37	Wrong response received	D	L	E	I	O		T		I	
38	No response received	D	L	E	I	O		T		I	S
39	Sent wrong response	D	L	E	I	O		T	R		
40	Terminal answering Wrong address		L	E	I	O		T	R		S
41	Two terminals answer One address		L	E	I	O		T		I	
42	Terminals address Not polled	D	L	E	I	O		T	R	I	
43	Calculating wrong BCC	D	L	E	I	O		T	R	I	
44	Remote end Calculating wrong BCC	D	L	E	I	O		T	R	I	
45	Sequence count Errors	D	L	E	I	O		T	W	I	

46	Echo clamp problems	D	L		E	I	O		T			
47	Line cross talk	D	L		E	I	O		T	R	I	S
48	Wrong line propagation delay	D	L		E	I	O		T	R		
49	Missing/extra data records (no errors)	D	L		E	I	O		T	R		
50	Missing/extra data bytes (no errors)	D	L		E	I	O		T	R		
51	Unattended remote end not set up	D	L		E	I	O					
52	Unattended terminal locked up because of failure	D	L		E	I	O					
53	Wrong rcv level	D	L		E	I	O				I	
54	Terminal fails to disconnect	D			E	I	O			R	I	
55	Lack of leading sync character	D	L		E	I	O		T		I	

ENTRY POINTS			
FROM	ENTER THIS MAP		
MAP NUMBER	ENTRY POINT	PAGE NUMBER	STEP NUMBER
3021	A	1	001
3028	A	1	001
3054	A	1	001
3078	A	1	001

001
(Entry Point A)

MAP DESCRIPTION:
This MAP lists all the cards pertaining to the MLCA and SLCA Data Communications area and their configurations. Because there is no specific symptom to be listed, the user may install the cards in any sequence.

START CONDITIONS:
None

LOGIC CARDS TESTED:
All SLCA cards located on the A-A1 board.
All MLCA cards located on the A-A3 board.

MLCA/SLCA Data Communications Intermittent Failure Replacement List

---

- Run ERAP and analyze the data in the error history table. The information stored there may be helpful in determining the failing FRU.

There will not be any specific symptoms or specific FRUs listed for data communications. The following list shows the cards pertaining to that area.

- For possible microcode problems reload the communications

© Copyright IBM Corp. 1983

microcode.

-- SLCA hardware --

```
Board A-A1 -----> A-A1G2  ----- If EIA, 1200 integrated modem,
                                 DDSA, X.21 non-sw

                  A-A1B2  ---- Internal clock (EIA-optional)
                                        (1200 integrated modem -
                                         mandatory)

                  A-A1K2  --------- Communications adapter card
```

-- MLCA Line 1 hardware --

```
Board A-A3 -----> A-A3M2  ----- If EIA, 1200 integrated modem,
                                 DDSA, autocall, X.21

                  A-A3U2  ---- Internal clock (EIA-optional)
                                        (1200 integrated modem -
                                         mandatory)

                  A-A3S2  --------- Communications controller

                  A-A3U3  --------- Channel terminator

                  A-A3R2  --------- Communications adapter card
```

-- Line 2 hardware --

```
Board A-A3 -----> A-A3L2* ----- If EIA, 1200 integrated modem,
                                 DDSA, autocall, X.21

                  A-A3Q2  --------- Communications adapter card
                  A-A3U2  ---- Internal clock (EIA-optional)
                                        (1200 IM-mandatory)

                  A-A3S2  --------- Communications controller

                  A-A3U3  --------- Channel terminator
```

*Note: If X.25 network support is configured for EIA or X.21 non-sw hardware, only the A-A3Q2 card will be installed

on line 2.

-- Line 3 hardware --

Board A-A3 -----> A-A3M4 ----- If EIA, 1200 integrated modem, DDSA, autocall, X.21

A-A3P2 --------- Communications adapter card

A-A3U2 ---- Internal clock (EIA-optional) (1200 IM-mandatory)

A-A3S2 --------- Communications controller

A-A3U3 --------- Channel terminator

-- Line 4 hardware --

Board A-A3 -----> A-A3L4* ----- If EIA, 1200 integrated modem, DDSA, autocall, V.35, X.21

A-A3N2 --------- Communications adapter card

A-A3U2 ---- Internal clock (EIA optional) (1200 Integrated modem mandatory)

A-A3S2 --------- Communications controller

A-A3U3 --------- Channel terminator

*Note: If X.25 network support is configured for EIA or X.21 non-sw hardware, only the A-A3N2 card will be installed on line 4.

ENTRY POINTS

FROM	ENTER THIS MAP		
MAP NUMBER	ENTRY POINT	PAGE NUMBER	STEP NUMBER
8108	A	2	001

EXIT POINTS

EXIT THIS MAP		TO	
PAGE NUMBER	STEP NUMBER	MAP NUMBER	ENTRY POINT
4	017	3014	A
4	014	3014	A
4	014	3014	B
4	017	3014	C
4	014	3014	C
4	014	3014	D
4	016	3021	A
4	013	3023	A
5	022	3031	A
5	023	3033	A
5	022	3050	A
5	022	3051	A
5	022	3052	A
5	022	3053	A
4	021	3054	A
4	018	3054	A
5	023	3059	A
5	023	3060	A
5	023	3061	A
5	023	3062	A
3	010	3073	A
3	010	3074	A
4	011	3074	A
3	010	3075	A
3	010	3076	A
4	011	3076	A
3	010	3077	A
3	010	3078	A

© Copyright IBM Corp. 1983

001
Data Communications Entry MAP

(Entry Point A)

- If the data communications MDI tests were not run, run them at this time.

The data communications adapter card and most of the integrated modem, if present, have checked out OK.

- If you were instructed to come here from the diagnostics and are performing a new installation, you may stop here. For all other cases, continue on.

Data communications line adapter and modem abbreviations are listed in the MLM.

- For information needed to answer questions in the data communications MAPs on what data communications hardware has been installed and what strapping options and configurations options were selected at installation time, list the system configuration.

(Entry Point B)

Is a 1200 Switched integrated modem installed on the failing line?

Y N

002
Is a 1200 Nonswitched integrated modem installed on the failing line?

Y N

003
Is the EIA configuration installed on the failing line?

Y N

4 4 4 3
A B C D

MAP DESCRIPTION:
This is the Data Communications Entry MAP.

START CONDITIONS:
The data communications MDI diagnostics were run.

FRUs PARTIALLY TESTED:
None

004

Is the Autocall configuration installed on the failing line?

Y N

005

Is the DDSA configuration installed on the failing line?

Y N

006

Is the V.35 Wideband configuration installed on the failing line?

Y N

007

Is the X.21 configuration installed on the failing line?

Y N

008

- Check the hardware configuration. One of the above configurations must be installed.

Go to Page 2, Step 001, Entry Point B.

009

Is X.25 network configured?

Y N

010

- Select mode 6.
- Press the Power key (power off).
- Check the card strapping on the X.21 adapter card.
- Verify that all six jumpers are installed correctly.
- See the Maintenance Manual Section 30-950.

Because of the manner in which the X.21 differential drivers and receivers operate, the MDI wrap tests may run without error even when one of the signal pairs is open

(Step 010 continues)

(Step 010 continued)

or grounded.

Bad card:

If SLCA - A-A1G2

If MLCA line 1 - A-A3M2

Line 2 - A-A3L2

line 3 - A-A3M4

Line 4 - A-A3L4

---or---

- Use the correct continuity hardmap below to check the cables. If a problem is found, use the continuity charts in the hardmap to isolate to the failing FRU. If no problems are found,

Go To Map 3078, Entry Point A.

If SLCA X.21,

Go To Map 3073, Entry Point A.

If MLCA line 1 X.21,

Go To Map 3074, Entry Point A.

If line 2 X.21,

Go To Map 3075, Entry Point A.

If line 3 X.21,

Go To Map 3076, Entry Point A.

If line 4 X.21,

Go To Map 3077, Entry Point A.

011

- Select mode 6.
- Press the Power key (power off).

One X.21 (X.25) line uses 2 communications ports.

- Check the card strapping on the line adapter.

If line 1/2 - A-A3M2

Line 3/4 - A-A3M4

- Verify that all six jumpers are installed correctly.
- See the Maintenance Manual section 30-950.

Because of the manner in which the X.21 differential

(Step 011 continues)

(Step 011 continued)
drivers and receivers operate, the MDI wrap tests may run without error even when one of the signal pairs is open or grounded.

Bad card:
If line 1/2 - A-A3M2
Line 3/4 - A-A3M4

---or---
- Use the correct continuity hardmap below to check the cables.

IF line 1/2,
Go To Map 3074, Entry Point A.

IF line 3/4,
Go To Map 3076, Entry Point A.

012
Because of the manner in which the V.35 differential drivers and receivers operate, the MDI wrap tests may run without error even when one of the signal pairs is open or grounded.
- Use the chart in hardmap 3080 to check continuity from the A-A3L4 card to the end of the external cable.

---or---
- The A-A3L4 card could be bad.

013
Go To Map 3023, Entry Point A.

014
If line 1,
Go To Map 3014, Entry Point A.

If line 2,
Go To Map 3014, Entry Point B.

If line 3,
Go To Map 3014, Entry Point C.

If line 4,
Go To Map 3014, Entry Point D.

015
Is X.25 network configured?
Y N

016
(Online test)
Go To Map 3021, Entry Point A.

017
One EIA (X.25) line uses 2 communications ports.
If line 1/2,
Go To Map 3014, Entry Point A.

If line 3/4,
Go To Map 3014, Entry Point C.

018
Go To Map 3054, Entry Point A.

019
Is this a WTC switch/PSN (Public switched network)?
Y N

020
Is this a US or Canada switched network?
Y N

021
(Online test w/remote)
Go To Map 3054, Entry Point A.

022

If SLCA

Go To Map 3031, Entry Point A.

If MLCA line 1,

Go To Map 3050, Entry Point A.

If line 2,

Go To Map 3051, Entry Point A.

If line 3,

Go To Map 3052, Entry Point A.

If line 4,

Go To Map 3053, Entry Point A.

023

If SLCA ,

Go To Map 3033, Entry Point A.

If MLCA line 1,

Go To Map 3059, Entry Point A.

If line 2,

Go To Map 3060, Entry Point A.

If line 3,

Go To Map 3061, Entry Point A.

If line 4,

Go To Map 3062, Entry Point A.

Data Comm Indicator MAP

5360 Systems Unit

ENTRY POINTS

FROM	ENTER THIS MAP		
MAP NUMBER	ENTRY POINT	PAGE NUMBER	STEP NUMBER
0101	B	2	002
8108	A	1	001

EXIT POINTS

EXIT THIS MAP		TO	
PAGE NUMBER	STEP NUMBER	MAP NUMBER	ENTRY POINT
4	016	0500	A
3	007	0584	A
4	012	0584	A

001
(Entry Point A)

MAP DESCRIPTION:
This MAP will isolate a data communications indicator problem to the failing FRU.

START CONDITIONS:
You were instructed to come here from the MDIs after an indicator light was found in error.

FRUs PARTIALLY TESTED:
A-A3R2 MLCA Line 1
A-A3Q2 MLCA Line 2
A-A3P2 MLCA Line 3
A-A3N2 MLCA Line 4
A-A1K2 SLCA
Control panel
Cables from A-A3V5 to control panel (MLCA)
Cables from A-A1V3 to control panel (SLCA)

You are here because a data communications indicator light failed.
- Answer 'Y' if it failed to come on.
- Answer 'N' if it failed to go off.

Y N

4 2
A B

© Copyright IBM Corp. 1983

002

(Entry Point B)

- If you have not already done so, power on the system.
- Using the CE probe, probe 'Comm Dsply Sw' input on all the communications adapter cards installed. (see Chart A)
  (for SLCA there will only be one communications adapter card).

  For MLCA, only the line selected in the control panel line hex light should have the:

  Up Light: Off
  Down Light: On

Chart A

Select	Probe
MLCA Line 1	A-A3R2S03
MLCA Line 2	A-A3Q2S03
MLCA Line 3	A-A3P2S03
MLCA Line 4	A-A3N2S03
SLCA	A-A1K2S03

Line not selected will be floating - both probe lights will be off.

Are the lights correct?

Y N

003

1.Bad control panel board B-A1
---or---
2.Bad or unseated cable from:
A-A1V3 if SLCA
A-A3V5 if MLCA
to control panel location: B-A1J4B.

004

- Select mode 6.
- Press the Power key (power off).

Is the failing display light on?

Y N

005

- Remove the communications adapter cards one at a time (starting with the failing line) until all cards are removed (see chart B).
- Each time a card is removed, power on the machine and check the failing display light. If it goes out then the last communications adapter card removed is bad.

Chart B
MLCA Line 1 - A-A3R2
MLCA Line 2 - A-A3Q2
MLCA Line 3 - A-A3P2
MLCA Line 4 - A-A3N2
SLCA - A-A1K2

Did the failing display light go out? (control panel)

Y N

006

- With power on, remove the cable from control panel location B-A1J4B.

Did the failing light go out?

Y N

007

Go To Map 0584, Entry Point A.

008

Bad cable from:
A-A1V3 if SLCA
A-A3V5 if MLCA
to control panel location: B-A1J4B.

009

The communications adapter card you just removed is bad.

010

- Remove the communications adapter cards one at a time (starting with the failing line) until all cards are removed (see chart B).
- Each time a card is removed, check the failing display light. If it goes out then the last communications adapter card removed is bad.

Did the failing display light go out? (control panel)

Y N

011

- Remove the cable from control panel location B-A1J4B.

Did the failing light go out?

Y N

012

Go To Map 0584, Entry Point A.

013

Bad cable from:
A-A1V3 if SLCA
A-A3V5 if MLCA
to control panel location: B-A1J4B.

014

The communications adapter card just removed is bad.

015

You are here because one of the communications indicator lights failed to come on.

- Press and hold the Lamp Test key.

Do all of the communications indicator light come on?

Y N

016

Go To Map 0500, Entry Point A.

017

- Using Chart C or D, jumper the failing light to ground to attempt to force it on.

Chart C - SLCA	
DTR	A-A1V3B02 to A-A1V3D08
DSR	A-A1V3B03 to A-A1V3D08
RTS	A-A1V3B04 to A-A1V3D08
CTS	A-A1V3B05 to A-A1V3D08
TDS	A-A1V3B06 to A-A1V3D08
RDS	A-A1V3B07 to A-A1V3D08
TI	A-A1V3B08 to A-A1V3D08
SYNC	A-A1V3B09 to A-A1V3D08

Chart D - MLCA	
DTR	A-A3V5B02 to A-A3V5D08
DSR	A-A3V5B03 to A-A3V5D08
RTS	A-A3V5B04 to A-A3V5D08
CTS	A-A3V5B05 to A-A3V5D08
TDS	A-A3V5B06 to A-A3V5D08
RDS	A-A3V5B07 to A-A3V5D08
TI	A-A3V5B08 to A-A3V5D08
SYNC	A-A3V5B09 to A-A3V5D08

With the board jumper installed, does the failing display light come on? (control panel)

Y N

018

1.Check for an unseated cable from:
  A-A1V3 if SLCA
  A-A3V5 if MLCA
  to J4B of the control panel.
---or---
2.Bad panel board:
  B-A1
---or---
  B-A2
---or---
3.Bad cable from:
  A-A1V3 if SLCA
(Step 018 continues)

(Step 018 continued)
A-A3V5 if MLCA
to the control panel.

019

- Using the CE probe, probe 'Comm Dsply Sw' input on the failing line communications adapter. (see Chart A)

  Up Light: Off
  Down Light: On

Chart A
MLCA Line 1 - A-A3R2S03
MLCA Line 2 - A-A3Q2S03
MLCA Line 3 - A-A3P2S03
MLCA Line 4 - A-A3N2S03
SLCA - A-A1K2S03

Are the lights correct?
Y N

020
1.Bad panel board:
B-A1
---or---
2.Bad cable from:
A-A1V3 if SLCA
A-A3V5 if MLCA
to control panel, location: B-A1J4B.

021
The communications adapter card installed in the failing line is bad (see Chart B).

Chart B
MLCA Line 1 - A-A3R2
MLCA Line 2 - A-A3Q2
MLCA Line 3 - A-A3P2
MLCA Line 4 - A-A3N2
SLCA - A-A1K2

ENTRY POINTS

FROM	ENTER THIS MAP		
MAP NUMBER	ENTRY POINT	PAGE NUMBER	STEP NUMBER
8112	A	1	001
8113	B	2	001
8118	A	1	001
8136	F	3	001
8137	A	1	001
8140	C	2	001
8141	C	2	001
8142	C	2	001
8143	C	2	001

MAP DESCRIPTION:
This MAP describes how to install the diagnostic wrap card on the communications logic board for SLCA line problems.

START CONDITIONS:
None

FRUs PARTIALLY TESTED:
A-A1K2, A-A1G2

001
(Entry Point A)
- Select mode 6.
- Press the Power key (power off).
- Disconnect cable from A-A1A4 (see note 1).
- Install wrap card p/n 4233787 (raw card p/n 4233786), end 'A', into A-A1A4.
- Press the Power key (power on).
- Select mode E.

Note 1: If it is necessary to temporarily remove some logic cards to perform this function, ensure that they are installed into their original locations when the steps are completed.

© Copyright IBM Corp. 1983

- Enter FF00.
- Insert diskette DIAG21.
- Press the Load key.
- Wait for the Main Menu display and select MDI MAPs.
- Select SLCA as the failing data communications line.
- Select the 'Error MAP 1' option.
- Follow the MDI instructions to fix the failing area.

(Entry Point B)
- Select mode 6.
- Press the Power key (power off)
- Remove wrap card p/n 4233787 (raw card p/n 4233786), from A-A1A4 (see note 2).
- Reinstall the cable into A-A1A4.

Go To Entry Point D.

(Entry Point C)
- Select Mode 6.
- Press the Power key (power off).

Go To Entry Point D.

(Entry Point D)
- Remove 2-wide card from A-A1G2. (Note: If end 'A' of the wrap card is plugged in by mistake, a power check will occur).
- Install wrap card p/n 4233787 (raw card p/n 4233786), end 'B', into A-A1G2.

- Press the Power key (power on).
- Select mode E.
- Enter FF00.
- Insert diskette DIAG21.
- Press the Load key.
- Wait for the Main Menu display and select MDI MAPs.
- Select SLCA as the failing data communications line.

Note 2: If it is necessary to temporarily remove some logic cards to perform this function, ensure that they are installed into their original locations when these steps are completed.

- Select the 'Error MAP 2' option.
- Follow the MDI instructions to fix the failing area.

(Entry Point F)
- Select mode 6.
- Press the Power key (power off).
- Remove the logic card from A-A1G2.

- Install the following board jumpers:

  A-A1G2B02 to A-A1G2B13
  A-A1G2B05 to A-A1G2D10
  A-A1G2D02 to A-A1G2D13
  A-A1G2D04 to A-A1G2B10

- Press the Power key (power on).
- Select mode E.
- Enter FF00.
- Insert diskette DIAG21.
- Press the Load key.
- Wait for the Main Menu display and select MDI MAPs.
- Select SLCA as the failing data communications line.
- Select the 'Error MAP 2' option.
- Follow the MDI instructions to fix the failing area.

ENTRY POINTS			
FROM	ENTER THIS MAP		
MAP NUMBER	ENTRY POINT	PAGE NUMBER	STEP NUMBER
3010	A	1	001
3010	B	1	001
3010	C	1	001
3010	D	1	001

* NOTE *

Entry Point A = MLCA line 1
Entry Point B = MLCA line 2
Entry Point C = MLCA line 3
Entry Point D = MLCA line 4

Chart A = Autocall external cable connector.
Chart B = Autocall cable tower wrap connector.

Chart C = 2-ended wrap card pn 4233787.

MAP DESCRIPTION:
This MAP is an autocall interface chart. It shows all the interface pins or the logic cards and cables supplying the interface. The chart can be used to trace cable problems.

START CONDITIONS:
Communications MDI diagnostics have been run.

LOGIC CARDS TESTED:
None

© Copyright IBM Corp. 1983

****
* Entry Point A *
****

Line 1 Interface wiring and board wiring for autocall

*** CONTINUITY CHECK TABLE ***

- If you have an autocall, perform the continuity check shown in the chart below. Also check for grounded lines.

  Note: The driver/receiver pairs, as shown in the chart below, are wrapped to each other only when the external cable wrap plug is installed. The cable tower wrap plug changes these pairs.

		Board wires			Board wires			Int cable	Ext cable		
		V		V	V		V	V	V		
							*		**	***	
Sect	Line name	A C D A R P D T E R	A C U A T R O D C A L L		A C U A T R O D C A L L		C C A O B N L N E E C T O R		I C / O O N N E C T O R	A C U A T B O L C E A L L	
		M L C A R2	A-A3 M2		A-A3 M2		A-A3 A2		Green Trian- gle 1		
1	Call req	M13	B02		J02		D04		20	4	-->
2	Pres nxt dig	S09	D13		G10		B08		5	5	<--

3	Digit present	P06	D02	G03	D06	4	2	-->|
4	ABAN call/ret	U10	B10	G04	D12	3	3	<--
5	NBR 4	M04	B09	G08	D13	14	16	-->|
6	Data line occ	S10	B13	J09	D02	6	22	<--
7	NBR 1	P10	B04	J06	B02	23	14	-->|
8	See note 1	S05	B08	J10	D05	B05	8	<--
9	NBR 8	M10	B05	J07	B04	18	17	-->|
10	Dist sta conn	S13	B12	J12	D09	8	13	<--
11	NBR 2	M05	B03	G05	B05	11	15	-->|
12	Power indicate	S07	D12	G13	D11	22	6	<--
13	Signal ground	D08	D08	J08	D08	B08	7	

* I/O board cable socket
** I/O connector (cable tower, external cable side, 25-pin connector)
*** Autocall cable connector (25-pin plug)

Note 1: This receiver is not used under normal operation of autocall but is needed for sensing the 'NBR 1' driver during wrap tests (rec clk).

****
* Entry Point B *
****

Line 2 Interface Wiring and Board Wiring for Autocall

*** CONTINUITY CHECK TABLE ***

- If you have an autocall, perform the continuity check shown in the chart below. Also check for grounded lines.

Note: The driver/receiver pairs, as shown in the chart below, are wrapped to each other only when the external cable wrap plug is installed. The cable tower wrap plug changes these pairs.

		Board wires		Board wires		Int cable	Ext cable	
		V	V	V	V V	VV	V	
					*	**	***	
Sect	Line name	A C D A A R P D T E R	A C U A T R O D C A L L	A C U A T R O D C A L L	C C A O B N L N E E C T O R	I C / O O N N E C T O R	A C U A T B O L C E A L L	
		M L C A A-A3 Q2	A-A3 L2	A-A3 L2	A-A3 A3	Green Trian- gle 2		
1	Call req	M13	B02	J02	D04	20	4	-->
2	Pres nxt dig	S09	D13	G10	B08	5	5	<--

3	Digit present	P06	D02	G03	D06	4	2	-->
4	ABAN call/ret	U10	B10	G04	D12	3	3	<--
5	NBR 4	M04	B09	G08	D13	14	16	-->
6	Data line occ	S10	B13	J09	D02	6	22	<--
7	NBR 1	P10	B04	J06	B02	23	14	-->
8	See note 2	S05	B08	J10	D05	B05	8	<--
9	NBR 8	M10	B05	J07	B04	18	17	-->
10	Dist sta conn	S13	B12	J12	D09	8	13	<--
11	NBR 2	M05	B03	G05	B05	11	15	-->
12	Power indicate	S07	D12	G13	D11	22	6	<--
13	Signal ground	D08	D08	J08	D08	B08	7	

* I/O board cable socket
** I/O connector (cable tower, external cable side, 25-pin connector)
*** Autocall cable connector (25-pin plug)

Note 2: This receiver is not used under normal operation of autocall but is needed for sensing the 'NBR 1' driver during wrap tests (rec clk).

****
* Entry Point C *
****

Line 3 Interface wiring and board wiring for autocall

*** CONTINUITY CHECK TABLE ***

- If you have an autocall, perform the continuity check shown in the chart below. Also check for grounded lines.

Note: The driver/receiver pairs, as shown in the chart below, are wrapped to each other only when the external cable wrap plug is installed. The cable tower wrap plug changes these pairs.

		Board wires		Board wires		Int cable	Ext cable	
Sect	Line name	V	V	V	V V	VV	V	
					*	**	***	
		A C D A A R P D T E R	A C U A T R O D C A L L	A C U A T R O D C A L L	C C A O B N L N E E C T O R	I C / O O N N E C T O R	A C U A T B O L C E A L L	
		M L C A A-A3 P2	A-A3 M4	A-A3 M4	A-A3 A4	Green Trian-gle 3		
1	Call req	M13	B02	J02	D04	20	4	-->|
2	Pres nxt dig	S09	D13	G10	B08	5	5	<--|

3	Digit present	P06	D02	G03	D06	4	2	-->|
4	ABAN call/ret	U10	B10	G04	D12	3	3	<--
5	NBR 4	M04	B09	G08	D13	14	16	-->|
6	Data line occ	S10	B13	J09	D02	6	22	<--
7	NBR 1	P10	B04	J06	B02	23	14	-->|
8	See note 3	S05	B08	J10	D05	B05	8	<--
9	NBR 8	M10	B05	J07	B04	18	17	-->|
10	Dist sta conn	S13	B12	J12	D09	8	13	<--
11	NBR 2	M05	B03	G05	B05	11	15	-->|
12	Power indicate	S07	D12	G13	D11	22	6	<--
13	Signal ground	D08	D08	J08	D08	B08	7	

* I/O board cable socket
** I/O connector (cable tower, external cable side, 25-pin connector)
*** Autocall cable connector (25-pin plug)

Note 3: This receiver is not used under normal operation of autocall but is needed for sensing the 'NBR 1' driver during wrap tests (rec clk).

****
* Entry Point D *
****

Line 4 Interface wiring and board wiring for autocall

*** CONTINUITY CHECK TABLE ***

- If you have an autocall, perform the continuity check shown in the chart below. Also check for grounded lines.

  Note: The driver/receiver pairs, as shown in the chart below, are wrapped to each other only when the external cable wrap plug is installed. The cable tower wrap plug changes these pairs.

		Board wires			Board wires		Int cable	Ext cable		
		V	V		V	V V	VV	V		
						*	**	***		
Sect	Line name	A C D A A R P D T E R M L C A A-A3 N2	A C U A T R O D C A L L		A C U A T R O D C A L L A-A3 L4	C C A O B N L N E E C T O R A-A3 A5	I C / O O N N E C T O R Green Trian-gle 4	A C U A T B O L C E A L L		
1	Call req	M13	B02		J02	D04	20	4	-->	
2	Pres nxt dig	S09	D13		G10	B08	5	5	<--	

3	Digit present	P06	D02	G03	D06	4	2	-->
4	ABAN call/ret	U10	B10	G04	D12	3	3	<--
5	NBR 4	M04	B09	G08	D13	14	16	-->
6	Data line occ	S10	B13	J09	D02	6	22	<--
7	NBR 1	P10	B04	J06	B02	23	14	-->
8	See note 4	S05	B08	J10	D05	B05	8	<--
9	NBR 8	M10	B05	J07	B04	18	17	-->
10	Dist sta conn	S13	B12	J12	D09	8	13	<--
11	NBR 2	M05	B03	G05	B05	11	15	-->
12	Power indicate	S07	D12	G13	D11	22	6	<--
13	Signal ground	D08	D08	J08	D08	B08	7	

* I/O board cable socket
** I/O connector (cable tower, external cable side, 25-pin connector)
*** Autocall cable connector (25-pin plug)

Note 4: This receiver is not used under normal operation of autocall but is needed for sensing the 'NBR 1' driver during wrap tests (rec clk).

- If you suspect a bad wrap connector, check the wrap connector for continuity.

Chart A
Autocall External Cable Wrap Connector

Note: The following lines are jumpered together when the autocall wrap connector is on the autocall cable:

DRIVER	FROM	TO	RECEIVER
Call request	4	5	Present next digit
Digit present	2	3	Abandon call/retry
Number 4	16	22	Data line occupied
Number 1	14	8	(see note 6)
Number 8	17	13	Distant station conn
Number 2	15	6,18	Power indicate

Chart B
Autocall Cable Tower Wrap Connector

Note: The following lines are jumpered together when the wrap connector is installed at the cable tower:

DRIVER	FROM	TO	RECEIVER
Digit present	4	5	Present next digit
Xmit data	2	3	Abandon call/retry
Call request	20	6	Data line occupied
Number 4	14	8	Distant station conn
Number 8	18	15	Transmit clock
Number 2	11	22	Power indicate
Number 1	23	17	Receive clock

The 2-ended wrap card is used at the cable socket and in place of the line adapter card to perform board level wraps.

- If the wrap card is suspect, use this chart to check it out.

Chart C
2-Ended Wrap card PN 4233787
(raw card PN 4233786)

End A		End B	
FROM	TO	FROM	TO
B02	D05	B02	B13
B04	D07	B03	D12
B05	D11	B04	B08
B08	D06	B05	B07
D02	D04	B09	B12
D09	D13	D02	D13
D10	D12	D04	B10

- When completed, remove the wrap plug and reinstall the autocall cable if removed.

Note 6: This receiver is not used under normal operation of autocall but is required for sensing the 'NBR 1' driver during wrap tests (rec clk).

ENTRY POINTS

FROM MAP NUMBER	ENTER THIS MAP: ENTRY POINT	PAGE NUMBER	STEP NUMBER
3010	A	1	001
3010	B	1	001
3010	C	1	001
3010	D	1	001

Entry Point A = Line 1 MLCA
Entry Point B = Line 2 MLCA
Entry Point C = Line 3 MLCA
Entry Point D = Line 4 MLCA
Entry Point E = SLCA

Chart A = EIA external cable and cable tower wrap connector.

Chart B = 2-ended wrap card pn 4233787.

MAP DESCRIPTION:
This MAP is an EIA/CCITT interface chart. It shows all the interface pins of the logic cards and cables supplying the interface. The chart can be used to trace cable problems.

START CONDITIONS:
None

LOGIC CARDS TESTED:
None

****
* Entry Point A *
****

This chart shows the EIA interface wiring and the board wiring for the stand-alone modem, line 1.

*** Continuity Check Table ***

- If you have a stand-alone modem, perform the continuity check shown in the chart below. Also check for grounded lines.

© Copyright IBM Corp. 1983

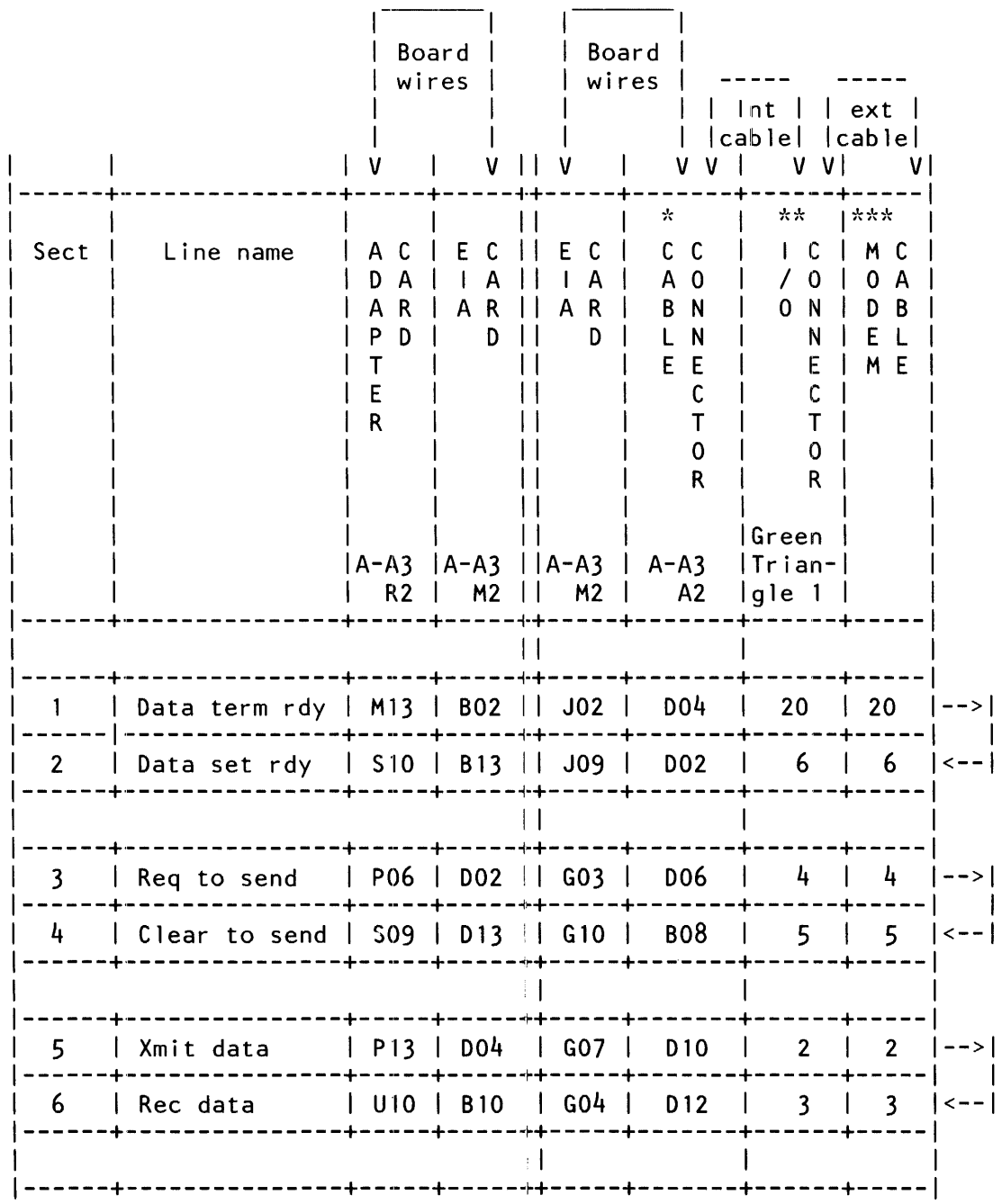

Sect	Line name	Board wires V	Board wires V	Board wires V	Board wires V	Int cable V	Int cable V	ext cable V	ext cable V	
		ADAPTER CARD	EIA CARD	EIA CARD	* CABLE CONNECTOR	** I/O CONNECTOR		*** MODEM CABLE		
		A-A3 R2	A-A3 M2	A-A3 M2	A-A3 A2	Green Triangle 1				
1	Data term rdy	M13	B02	J02	D04	20		20		-->
2	Data set rdy	S10	B13	J09	D02	6		6		<--
3	Req to send	P06	D02	G03	D06	4		4		-->
4	Clear to send	S09	D13	G10	B08	5		5		<--
5	Xmit data	P13	D04	G07	D10	2		2		-->
6	Rec data	U10	B10	G04	D12	3		3		<--

7	Rate select	P10	B04	J06	B02	23	23	-->
8	Rec clock	S05	B08	J10	D05	17	17	<--
9	Wrap	M10	B05	J07	B04	18	18	-->
10	Xmit clock	S08	B07	J04	D07	15	15	<--
11	Standby	M05	B03	G05	B05	11	11	-->
12	Ring indicate	S07	D12	G13	D11	22	22	<--
13	New sync	M04	B09	G08	D13	14	14	-->
14	Rec line sig d	S13	B12	J12	D09	8	8	<--
15	Signal ground	D08	D08	J08	D08	7	7	

* I/O board cable socket
** I/O connector (cable tower, external cable side, 25-pin connector)
*** Modem cable connector (25-pin plug)

```
*******************
*  Entry Point B  *
*******************
```

This chart shows the EIA interface wiring and the board wiring for the stand-alone modem, line 2.

```
***        Continuity Check Table        ***
```

- If you have a stand-alone modem, perform the continuity check shown in the chart below. Also check for grounded lines.

Sect	Line name	Board wires V	Board wires V	Board wires V	Board wires V	Int cable V	Int cable V	ext cable V	
					*	**		***	
		ADAPTER CARD	EIA CARD	EIA CARD	CABLE CONNECTOR	I/O CONNECTOR		MODEM CABLE	
		A-A3 Q2	A-A3 L2	A-A3 L2	A-A3 A3	Green Triangle 2			
1	Data term rdy	M13	B02	J02	D04	20		20	-->|
2	Data set rdy	S10	B13	J09	D02	6		6	<--|

3	Req to send	P06	D02	G03	D06	4	4	-->|
4	Clear to send	S09	D13	G10	B08	5	5	<--
5	Xmit data	P13	D04	G07	D10	2	2	-->|
6	Rec data	U10	B10	G04	D12	3	3	<--
7	Rate select	P10	B04	J06	B02	23	23	-->|
8	Rec clock	S05	B08	J10	D05	17	17	<--
9	Wrap	M10	B05	J07	B04	18	18	-->|
10	Xmit clock	S08	B07	J04	D07	15	15	<--
11	Standby	M05	B03	G05	B05	11	11	-->|
12	Ring indicate	S07	D12	G13	D11	22	22	<--
13	New sync	M04	B09	G08	D13	14	14	-->|
14	Rec line sig d	S13	B12	J12	D09	8	8	<--
15	Signal ground	D08	D08	J08	D08	7	7	

* I/O board cable socket
** I/O connector (cable tower, external cable side, 25-pin connector)
*** Modem cable connector (25-pin plug)

```
*******************
*  Entry Point C  *
*******************
```

This chart shows the EIA interface wiring and the board wiring for the stand-alone modem, line 3.

```
***        Continuity Check Table        ***
```

- If you have a stand-alone modem, perform the continuity check shown in the chart below. Also check for grounded lines.

Sect	Line name	Board wires V	Board wires V	Board wires V	Board wires V	Int cable V	Int cable V	ext cable V	
					*	**		***	
		ADAPTER	EIA	EIA	CABLE	I/O	CONNECTOR	MODEM	
		A-A3 P2	A-A3 M4	A-A3 M4	A-A3 A4	Green Triangle 3			
1	Data term rdy	M13	B02	J02	D04	20	20		-->|
2	Data set rdy	S10	B13	J09	D02	6	6		<--|

3	Req to send	P06	D02	G03	D06	4	4	-->|
4	Clear to send	S09	D13	G10	B08	5	5	<--
5	Xmit data	P13	D04	G07	D10	2	2	-->|
6	Rec data	U10	B10	G04	D12	3	3	<--
7	Rate select	P10	B04	J06	B02	23	23	-->|
8	Rec clock	S05	B08	J10	D05	17	17	<--
9	Wrap	M10	B05	J07	B04	18	18	-->|
10	Xmit clock	S08	B07	J04	D07	15	15	<--
11	Standby	M05	B03	G05	B05	11	11	-->|
12	Ring indicate	S07	D12	G13	D11	22	22	<--
13	New sync	M04	B09	G08	D13	14	14	-->|
14	Rec line sig d	S13	B12	J12	D09	8	8	<--
15	Signal ground	D08	D08	J08	D08	7	7	

* I/O board cable socket
** I/O connector (cable tower, external cable side, 25-pin connector)
*** Modem cable connector (25-pin plug)

****
* Entry Point D *
****

This chart shows the EIA interface wiring and the board wiring for the stand-alone modem, line 4.

*** Continuity Check Table ***

- If you have a stand-alone modem, perform the continuity check shown in the chart below. Also check for grounded lines.

		Board wires		Board wires		Int cable		ext cable	
		V	V	V	V	V	V	V	V
Sect	Line name	A C D A A R P D T E R	E C I A A R D	E C I A A R D	C C A O B N L N E E C T O R	* I C / O O N N E C T O R	**	M C O A D B E L M E	***
		A-A3 N2	A-A3 L4	A-A3 L4	A-A3 A5	Green Trian-gle 4			
1	Data term rdy	M13	B02	J02	D04	20		20	-->
2	Data set rdy	S10	B13	J09	D02	6		6	<--

3	Req to send	P06	D02	G03	D06	4	4	-->|
4	Clear to send	S09	D13	G10	B08	5	5	<--
5	Xmit data	P13	D04	G07	D10	2	2	-->|
6	Rec data	U10	B10	G04	D12	3	3	<--
7	Rate select	P10	B04	J06	B02	23	23	-->|
8	Rec clock	S05	B08	J10	D05	17	17	<--
9	Wrap	M10	B05	J07	B04	18	18	-->|
10	Xmit clock	S08	B07	J04	D07	15	15	<--
11	Standby	M05	B03	G05	B05	11	11	-->|
12	Ring indicate	S07	D12	G13	D11	22	22	<--
13	New sync	M04	B09	G08	D13	14	14	-->|
14	Rec line sig d	S13	B12	J12	D09	8	8	<--
15	Signal ground	D08	D08	J08	D08	7	7	

* I/O board cable socket
** I/O connector (cable tower, external cable side, 25-pin connector)
*** Modem cable connector (25-pin plug)

```
*******************
*  Entry Point E  *
*******************
```

This chart shows the EIA interface wiring and the board wiring for the stand-alone modem, SLCA.

```
***        Continuity Check Table        ***
```

- If you have a stand-alone modem, perform the continuity check shown in the chart below. Also check for grounded lines.

Sect	Line name	Board wires V	Board wires V	Board wires V	Board wires V	Int cable V	Int cable V	ext cable V	
		ADAPTER CARD	EIA CARD	EIA CARD	* CABLE CONNECTOR	** I/O CONNECTOR	** I/O CONNECTOR	*** MODEM CABLE	
		A-A1 K2	A-A1 G2	A-A1 G2	A-A1 A4	Green Triangle 1			
1	Data term rdy	M13	B02	J02	D04	20	20		-->
2	Data set rdy	S10	B13	J09	D02	6	6		<--

3	Req to send	P06	D02	G03	D06	4	4	-->|
4	Clear to send	S09	D13	G10	B08	5	5	<--
5	Xmit data	P13	D04	G07	D10	2	2	-->|
6	Rec data	U10	B10	G04	D12	3	3	<--
7	Rate select	P10	B04	J06	B02	23	23	-->|
8	Rec clock	S05	B08	J10	D05	17	17	<--
9	Wrap	M10	B05	J07	B04	18	18	-->|
10	Xmit clock	S08	B07	J04	D07	15	15	<--
11	Standby	M05	B03	G05	B05	11	11	-->|
12	Ring indicate	S07	D12	G13	D11	22	22	<--
13	New sync	M04	B09	G08	D13	14	14	-->|
14	Rec line sig d	S13	B12	J12	D09	8	8	<--
15	Signal ground	D08	D08	J08	D08	7	7	

* I/O board cable socket
** I/O connector (cable tower, external cable side, 25-pin connector)
*** Modem cable connector (25-pin plug)

- If you suspect a bad wrap connector, check the wrap connector for continuity (see note below)

- Chart A -
EIA External Cable -or- Cable Tower Wrap Connector

Note: The following lines are jumpered together when the EIA wrap connector is on the EIA cable or on the EIA cable tower connector for an EIA configuration.

	FROM	TO	
Xmit data	2	3	Received data
Request to send	4	5	Clear to send
Data terminal ready	20	6	Data set ready
Rate select	23	17	Received clock
Select standby	11	22	Ring indicator
Wrap	18	15	Transmit clock
New sync	14	8	Receive line signal detect

The 2-ended wrap card is used at the board cable socket and in place of the line adapter card to perform board level wraps.

- If the wrap card is suspect, use this chart to check it out.

Chart B
2-Ended Wrap card Pn 4233787
(raw card Pn 4233786)

End A		End B	
FROM	TO	FROM	TO
B02	D05	B02	B13
B04	D07	B03	D12
B05	D11	B04	B08
B08	D06	B05	B07
D02	D04	B09	B12
D09	D13	D02	D13
D10	D12	D04	B10

Note: When completed, remove the wrap jumpers and reinstall the modem cable if removed.

ENTRY POINTS

FROM	ENTER THIS MAP		
MAP NUMBER	ENTRY POINT	PAGE NUMBER	STEP NUMBER
3010	A	1	001

EXIT POINTS

EXIT THIS MAP		TO	
PAGE NUMBER	STEP NUMBER	MAP NUMBER	ENTRY POINT
2	002	3008	A
2	004	3008	A
2	006	3008	A
3	007	3008	A
2	002	3009	A
2	004	3009	A
2	006	3009	A
3	007	3009	A
2	002	3020	A
2	006	3020	A
2	002	3020	B
2	006	3020	B
2	002	3020	C
2	006	3020	C
2	002	3020	D
2	006	3020	D
2	002	3020	E
2	006	3020	E

001
(Entry Point A)

- Ensure that the external cable is connected to the external modem.

- Run the SDLC online test or the BSCA online test with a remote system. It is not important which system you select as the primary (requestor) or the secondary (responder).
  (See the maintenance manual section 30-410 or 30-415).
- Ensure that the same data rate and the same selection of NRZI or not NRZI is used.

(Step 001 continues)

MAP DESCRIPTION:
This MAP runs the Online test.

START CONDITIONS:
The data communications MDI diagnostics were run.

FRUs PARTIALLY TESTED:
None

© Copyright IBM Corp. 1983

(Step 001 continued)
Does the test run without error?
Y N

002
- Suspect the modem or the data communications equipment.
- Select the one you will go to first from the list below:

Intermittent Failure Replacement List,
Go To Map 3009, Entry Point A.

Error Log MAP,
Go To Map 3008, Entry Point A.

If SLCA (continuity chart),
Go To Map 3020, Entry Point E.

If MLCA line 1 (continuity chart),
Go To Map 3020, Entry Point A.

If line 2 (continuity chart),
Go To Map 3020, Entry Point B.

If line 3 (continuity chart),
Go To Map 3020, Entry Point C.

If line 4 (continuity chart),
Go To Map 3020, Entry Point D.

003
Is there a switched network backup feature in the modem?
Y N

004
- Suspect possible program incompatibility. Dump and analyze the ERAP data.

Error Log MAP,
Go To Map 3008, Entry Point A.

Intermittent failure replacement list,
Go To Map 3009, Entry Point A.

A

A

005
- Run the SDLC online test or the BSCA online t with a remote system. It is not important wh system you select as the primary (requestor) or t secondary (responder).
  (See the maintenance manual section 30-410 30-415).
- Ensure that the same data rate and the sa selection of NRZI or not NRZI is used.

Does the test run without error?
Y N

006
- Suspect the modem or the data communicati equipment.
- Select the one you will to go to first from the below:

Intermittent failure replacement list,
Go To Map 3009, Entry Point A.

Error Log MAP
Go To Map 3008, Entry Point A.

If SLCA (continuity chart),
Go To Map 3020, Entry Point E.

If MLCA line 1 (continuity chart),
Go To Map 3020, Entry Point A.

If line 2 (continuity chart),
Go To Map 3020, Entry Point B.

If line 3 (continuity chart),
Go To Map 3020, Entry Point C.

If line 4 (continuity chart),
Go To Map 3020, Entry Point D.

3
B

007

- Suspect possible program incompatibility. Dump and analyze the ERAP data.

Error Log MAP,
Go To Map 3008, Entry Point A.

Intermittent failure replacement list,
Go To Map 3009, Entry Point A.

DDSA Remote Loop-back Test

5360 Systems Unit

ENTRY POINTS

FROM	ENTER THIS MAP		
MAP NUMBER	ENTRY POINT	PAGE NUMBER	STEP NUMBER
3010	A	1	001

EXIT POINTS

EXIT THIS MAP		TO	
PAGE NUMBER	STEP NUMBER	MAP NUMBER	ENTRY POINT
12	025	3024	A
12	025	3025	A
12	025	3026	A
12	025	3027	A
12	020	3028	A
12	021	3028	A
12	025	3029	A

001
(Entry Point A)

MAP DESCRIPTION:
This MAP tests the remote DDSA Loop-back test. Do not use this MAP on a multipoint network. Aid from a remote system is necessary to complete this test.

START CONDITIONS:
The data communications MDI diagnostics were run and no problem was found or was not corrected.

FRUs PARTIALLY TESTED:
SLCA - A-A1K2, A-A1G2
MLCA line 1 - A-A3R2, A-A3M2
line 2 - A-A3Q2, A-A3L2
line 3 - A-A3P2, A-A3M4
line 4 - A-A3N2, A-A3L4

Is this a DDSA local attach configuration?

Y N

1
2 2
A B

© Copyright IBM Corp. 1983

002

Note: This test is in two parts. It is necessary that the remote system or device can perform either or both of the following:
(1) enable the DDSA Wrap function and/or
(2) transmit a DDSA remote loop-back test. Determine what the remote system or device can perform before continuing.

- Now, decide which system (local or remote) should transmit the remote DDSA loop-back test and which system should be in wrap mode (this decision relies on system availability). If availability is no problem, always transmit from the local system first, using the following procedure:

Does the remote system have to transmit first?
Y N

003
(Entry Point B)

```
**********
* Part A *
**********
```

The local system is transmitting the remote Loop-back test and the remote system is in wrap mode.

- Enable the DDSA Wrap function at the remote system.
  1. If the remote system is a S/36 enable DDSA wrap at the remote station by doing the following:
  - Perform CSIPL at the remote end using the diagnostic diskette DIAG21.
  - Select mode 1.
  - Press the System Reset key.
  - Select mode E.
  - Enter FF00.
  - Insert diskette DIAG21.
  - Press the Load key.
  - Select the 'TU Select' option on the first screen display (Main Option Menu).

(Step 003 continues)

(Step 003 continues)

(Step 003 continued)
- Select the failing data communications line.
- Enter 71 as the last two digits of the test ID.
- Select option 1 (execute test display and stop).

2.If the remote system is a 5340, perform this at the remote system by jumpering from:
(If remote 5340 has MLCA (4-line communications, feature code 4500 installed).

-DS wrap interface

```
line 1, A-B3L2B05 to A-B3L2D08(gnd)
line 2, A-B3M2B05 to A-B3L2D08(gnd)
line 3, A-B3L4B05 to A-B3L2D08(gnd)
line 4, A-B3M4B05 to A-B3L2D08(gnd)
```

(If remote 5340 has 2-line communications, feature code 2500, 3500 installed)

-DS Wrap Interface

```
line 1, A-A2H2B05 to A-A2H2D08(gnd)
line 2, A-A3H4B05 to A-A2H4D08(gnd)
```

- Ensure that the local and remote systems are jumpered for the same speed (see maintenance manual section 34-310).
- Perform system CSIPL at the local end using the DIAG21 diagnostic diskette (see note 1).
- Select mode 1.
- Press the System Reset key.
- Select mode E.
- Enter FF00.
- Insert diskette DIAG21.
- Press the Load key.
- Select the TU Select option on the first screen display (Main Option Menu).
- Select the failing data communications line.
- Insert the DIAG23 diskette in place of the DIAG21 diskette.
- On the next screen display, type in 50 (system console).

- On the next screen display, select option 3 (loop test until error).

Correct test results are:
0000
(Step 003 continues)

(Step 003 continued)

Note 1: If system CSIPL was performed using the DIAG21 diagnostic diskette and the Main Option Menu is displayed or can be obtained by pressing the Attn and the Enter keys (system console) skip this part of step 002 in this MAP.

(Step 003 continued)
Are the test results always correct?
Y N

004
- Press the Attn key twice to return to the TU Select menu.
- Run the transmit exerciser test.
- Enter 73 as the last two digits of the test ID.
- Select option 1 (execute test, display and stop).
- Select option 3 (transmit alternating pulses) or Option 1 if NRZI is enabled (check configuration).
- Select option 5 (transmits for 1 hour).

- Scope the '+ Transmit' line and the '- Transmit' line.

Sync '-external' on:
SLCA, A-A1G2D04
MLCA
line 1, A-A3M2D04
line 2, A-A3L2D04
line 3, A-A3M4D04
line 4, A-A3L4D04
'-DS send data space' line.
Use add mode.
0.5 MS/Div (if line speed is 2400 BPS).
0.2 MS/Div (if line speed is 4800 BPS).
0.1 MS/Div (if line speed is 9600 BPS).
Channel 1, 1.0 V/div AC.
Channel 2, 1.0 V/div AC invert.
Scope on channel 1 (DT):
SLCA, A-A1G2G02
MLCA
line 1, A-A3M2G02
line 2, A-A3L2G02
line 3, A-A3M4G02
line 4, A-A3L4G02

- Scope on channel 2 (DR):
SLCA, A-A1G2J05
MLCA
line 1, A-A3M2J05
line 2, A-A3L2J05
line 3, A-A3M4J05
line 4, A-A3L4J05
(Step 004 continues)

(Step 004 continued)

To aid in comparison, see figures 3 and 4.

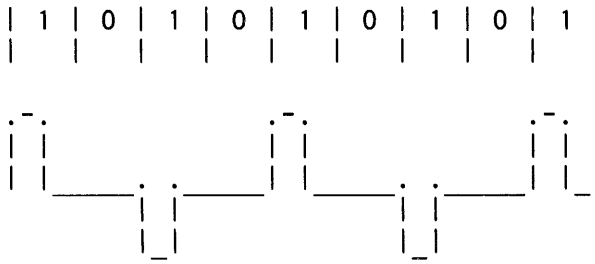

Alternate 1 and 0 bits

Figure 1

Do the waveshapes compare with Figure 1 and is the transmit amplitude 1.4 V or more?

(Step 004 continues)

Idle characters

For 2400 to 9600 BPS data rate
the Bit pattern is: 1 1 1 X 0 V
For 56 K BPS the character is 7
bits long: 1 1 1 1 X 0 V

'V is a violation character.
The bit pattern violates
the opposite polarity rule.

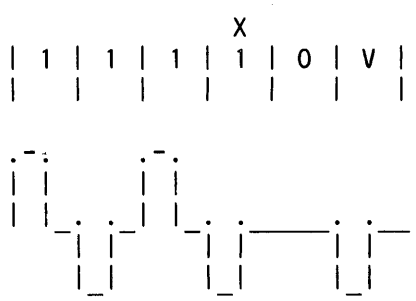

(Step 004 continues)

(Step 004 continued)

Y N

7 7
E F

(Step 004 continued)

Or

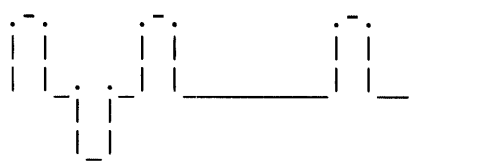

1	1	1	X	0	V	Bits

Figure 3

Idle characters indicate the remote system is not in the wrap mode.

All 1 bits are being transmitted.

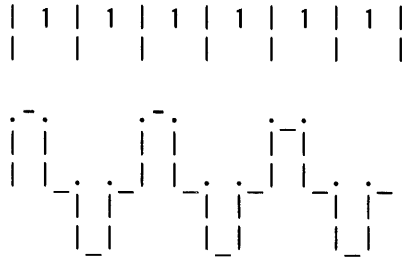

1	1	1	1	1	1

All 1 data bits

Figure 4

005

- Remove the external cable from the CSU (channel service unit) and install a wrap connector.

Do the waveshapes now compare with Figure 1 and is the transmit amplitude 1.4 V or more?

Y N

006

If SLCA, the A-A1G2 is bad.
MLCA
If line 1, the A-A3M2 is bad.
If line 2, the A-A3L2 is bad.
If line 3, the A-A3M4 is bad.
If line 4, the A-A3L4 is bad.

007

There is a possible CSU or network problem.

008

- Scope the '+ Receive line' and the '- Receive' line.

Sync '- External' on:
The '- DS Send Data Space' line.
SLCA, A-A1G2D04
MLCA
line 1, A-A3M2D04
line 2, A-A3L2D04
line 3, A-A3M4D04
line 4, A-A3L4D04
Use add mode.

0.5 MS/div (if line speed is 2400 BPS).
0.2 MS/div (if line speed is 4800 BPS).
0.1 MS/div (if line speed is 9600 BPS).

Channel 1, 2.0 V/div DC.
Channel 2, 2.0 V/div AC invert.

- Scope on channel 1:
(DT1, +Receive)
SLCA, A-A1G2G09
MLCA
line 1, A-A3M2G09
line 2, A-A3L2G09
line 3, A-A3M4G09
(Step 008 continues)

(Step 008 continued)
line 4, A-A3L4G09

Scope on channel 2:

(DR1, - Receive)
SLCA, A-A1G2J13
MLCA
line 1, A-A3M2J13
line 2, A-A3L2J13
line 3, A-A3M4J13
line 4, A-A3L4J13

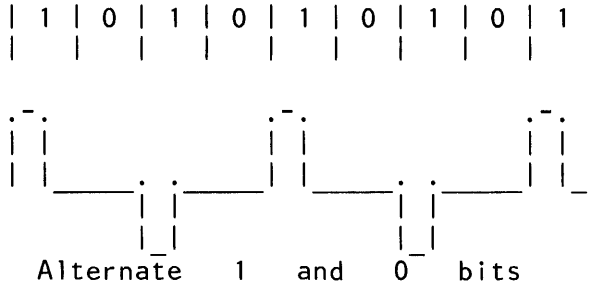

F i g u r e 2

Do the waveshapes compare with Figure 2 and is the amplitude 1.33 V or more?

Y N

009

- See Figure 3 if the waveshapes do not compare tc Figure 2.

The problem is in the network or the remote system.

- To isolate the problem, have the remote system verify that it is receiving and transmitting alternate 0 and 1 bits.

(Step 009 continues)

(Step 009 continued)

Idle characters

For 2400 to 9600 BPS data rate
the Bit pattern is: 1 1 1 X 0 V
For 56 K BPS the character is 7
bits long: 1 1 1 1 X 0 V

'V' is a violation character.
The bit pattern violates
the opposite polarity rule.

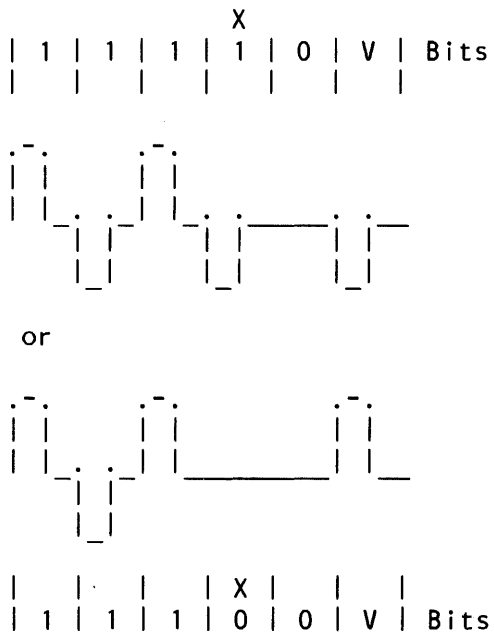

F i g u r e 3

Idle characters indicate the remote system is not in the wrap mode.

(Step 009 continues)

(Step 009 continues)

(Step 009 continued)

(Step 009 continued)

All 1 bits are being transmitted.

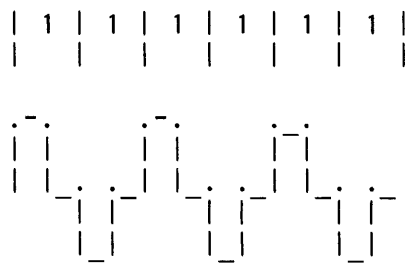

All 1 data bits

Figure 4

010

If SLCA, the A-A1G2 is bad.
MLCA
If line 1, the A-A3M2 is bad.
If line 2, the A-A3L2 is bad.
If line 3, the A-A3M4 is bad.
If line 4, the A-A3L4 is bad.

011

The test is running correctly (no problem has been found at your end).

- Display the Main Option Menu.
- Press the Cmd key (system console).
- Press the 7 key (system console).
- Repeat this several times if the test continues to run.

The second part (part B) of this MAP, starting at Entry Point C, runs the remote Loop-back test in the opposite direction.

Was part B of this MAP performed first and was no error found?

Y N

If you cannot stop running the test,
- Press the System Reset key.
- Press the CSP Start key.

012
(Entry Point C)

```
**********
* Part B *
**********
```

The remote system is transmitting the remote Loop-back test and the local system is in wrap mode (see note 1).

At the local system, enable the wrap line to the DDSA card by doing the following:
- Perform CSIPL using the DIAG21 diagnostic diskette (see note 2).
- Select mode 1.
- Press the System Reset key.
- Select mode E.
- Enter FF00.
- Insert diskette DIAG21.
- Press the Load key.
- Select the 'TU Select' option on the Main Option Menu screen.
- Select the failing communications line.
- Enter 71 as the last two digits of the test ID.
- Select option 1 (execute test, display and stop).

- Instruct the remote system to transmit a remote

(Step 012 continues)

Note 1: If the remote system is a S/36 system, repeat the same procedure you followed at the start of this MAP.
Instruct the remote system to perform part A of this MAP.

Note 2: If system CSIPL was performed using the diagnostic diskette DIAG21 and the Main Option Menu can be displayed, skip this part of step 012 of this MAP.

(Step 012 continued)
DDSA loop test.

Does the test run correctly?

Y N

013

Was part A of this MAP performed?

Y N

014

Is the remote system a S/36?

Y N

015

Go to Page 2, Step 003, Entry Point B, unless remote end wants to follow the troubleshooting procedure first. If the problem is not isolated by the remote system, the CE should return and

Go to Page 2, Step 003, Entry Point B.

016

- Instruct the CE at the remote system to complete the troubleshooting using this MAP.

017

The problem is in the remote system, CSU or network.

018

Was Part A of this MAP performed at your local system?

Y N

019

Go to Page 2, Step 003, Entry Point B.

Note: Use the scope procedure and Figures 1 and 2 to verify the receiving and transmitting of the alternate 0 and 1 bits if it is requested by the CE at the remote system.

020
No problem is found in the remote DDSA Loop-back test.
Go To Map 3028, Entry Point A.

- Run the Online test.

021
No problem is found in the remote DDSA Loop-back test.
Go To Map 3028, Entry Point A.

- Run the Online test.

022
Go to Page 10, Step 012, Entry Point C.

023
- Run the MDIs on the remote DDSA system.

Do the MDIs run OK?
Y N

024
The problem is in the remote system.

025
The local attach adapter cable p/n 4236967 is bad.
If SLCA,
Go To Map 3029, Entry Point A.

If MLCA line 1,
Go To Map 3024, Entry Point A.

If line 2,
Go To Map 3025, Entry Point A.

If line 3,
Go To Map 3026, Entry Point A.

If line 4,
Go To Map 3027, Entry Point A.

(Step 025 continues)

(Step 025 continued)
- Use the continuity charts to check for a cable open, short circuit, or ground problem.

ENTRY POINTS			
FROM	ENTER THIS MAP		
MAP NUMBER	ENTRY POINT	PAGE NUMBER	STEP NUMBER
3023	A	1	001
3028	A	1	001

001
(Entry Point A)

MAP DESCRIPTION:
This MAP contains the DDSA interface charts. It shows all the interface pins on the logic cards and cables supplying the interface. Use the charts to trace any cable problems and to free-lance scoping (line 1).

Chart 1: This chart shows the adapter card to DDSA card interface on the A-A3 board.

Chart 2: This chart shows the interconnection of the cable lines from the A-A3 board through the external cable.

Chart 3: This chart shows the DDSA lines jumpered by the cable and cable tower wrap connectors.

Chart 4: This chart shows the interconnections of the DDSA local attach adapter cable P/N 4236967.

START CONDITIONS:
1.The system power is off.
2.The data communications MDI diagnostics were run.

LOGIC CARDS TESTED:
None

© Copyright IBM Corp. 1983

DDSA interface wiring and board wiring

*** CONTINUITY CHECK TABLE ***

- Reinstall the cables.
- Remove the wrap connector.
- Perform the continuity checks specified by the charts below. Also check for grounded lines.
- When the checks are completed, reset the machine to its original configuration.

Chart 1

Sect	Line name	Board wires V	Board wires V	Board wires V	Board wires V	Int cable V	Int cable V	Ext cable V
					*		**	***
		A C D A A R P D T E R	D C D A S R A D	D C D A S R A D	C C A O B N L N E E C T O R		C T A O B W L E E R	M C O A D B E L M E
		A-A3 R2	A-A3 M2	A-A3 M2	A-A3 A2		Conn	
1	-DS terminal ready	M13	B02	Line not used				
2	-DS data set ready	S10	B13	Note: See the following chart for cable interface wiring.				

3	-DS request to send	P06	D02
4	-DS ring indicate	S07	D12
5	-DS send data space	P13	D04
6	-DS clear to send	S09	D13
7	-Rate select	P10	B04
8	Transmit clock	S08	B07
9	-DS wrap interface	M10	B05
10	-DS receive data space	U10	B10
11	-DS select standby	M05	B03
12	Receive clock	S05	B08
13	-DS new sync	M04	B09
14	-DS carrier detect	S13	B12
15	Ground	D08	D08

* I/O board cable socket
** Cable tower connector (25 pin conn)
*** Modem cable connector (15 pin plug)

Chart 2

Sect	Line name	Board wires V	Board wires VV	Int cable V	Int cable V	Ext cable V
			*	* *		***
		DDSA CARD	CABLE CONNECTOR	CABLE TOWER CONN		MODEM CABLE 15-pin conn (CSU end)
		A-A3 M2	A-A3 A2	Green Triangle 1		
1	Ground	D08	D08	----		
2	-Received data (DR1)	J13	B12	25	4	
3	+Received data (DT1)	G09	B13	12	3	
4	-Transmitted data (DR)	J05	B09	21	6	
5	+Transmitted data (DT)	G02	B10	19	5	

* I/O board cable socket
** Cable tower connector (25 pin conn)
*** Modem cable connector (15 pin plug)

- If you suspect a bad wrap connector, check the wrap connectors for continuity.

Chart 3 - 15-pin connector (end of external cable)

Note: The following lines are jumpered together when the DDSA wrap connector is on the CSU end of the DDSA cable.			
	Connector pin From	To	
-Received data (DR1)	4	6	-Transmitted data (DR)
+Received data (DT1)	3	5	+Transmitted data (DT)

Note: - When completed, remove the wrap jumpers and reinstall the modem cable, if it was removed.

25-pin cable tower wrap connector (for DDSA)

Note: The following DDSA lines are jumpered together when the 25-pin cable tower wrap plug is installed.			
	Connector pin From	To	
-Received data (DR1)	25	21	-Transmitted data (DR)
+Received data (DT1)	12	19	+Transmitted data (DT)

End 'A' of the 2-ended wrap card is used in place of the internal cable to perform a board cable socket wrap.
- If the 2-ended wrap card pn 4233787 (raw card p/n 4233786) is suspect, use this chart to check end 'A' (End 'A' chart continued on next page).

```
 -----------
|  End 'A'
|FROM    TO |
|B09     B12|
|B10     B13)
 -----------
```

C h a r t 4

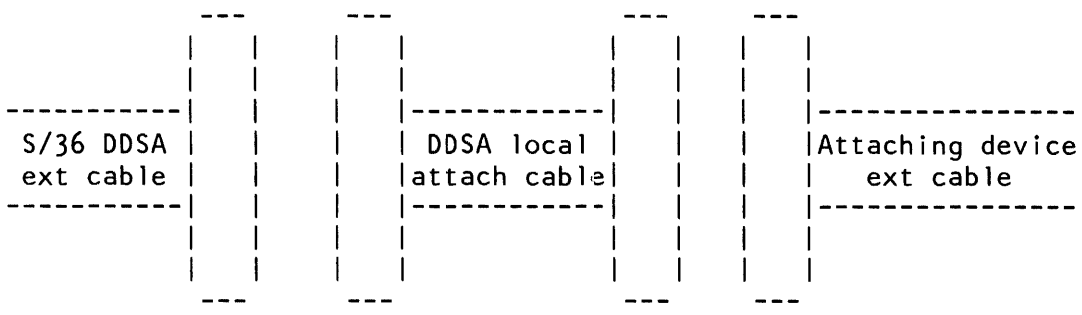

```
              DDSA local attach adapter cable
           ---      ---              ---      ---
          |   |    |   |            |   |    |   |
          |   |    |   |            |   |    |   |
-----------|   |    |   |------------|   |    |   |----------------
 S/36 DDSA |   |    |   | DDSA local |   |    |   |Attaching device
 ext cable |   |    |   |attach cable|   |    |   |   ext cable
-----------|   |    |   |------------|   |    |   |----------------
          |   |    |   |            |   |    |   |
          |   |    |   |            |   |    |   |
           ---      ---              ---      ---
                          .----------.
                          | * Note 1 |
                          V          V
.-------------------------------..-------------------------------.
|   Signal   |   Wire    | Conn ||  Conn |   Wire    |   Signal   |
|            |   color   | pin  ||  pin  |   color   |            |
|------------+-----------+------||------+-----------+------------|
| Rdata(DR1) |   Red     |  4   ||  6   |   Red     | Xdata(DR)  |
|------------+-----------+------||------+-----------+------------|
| Rdata(DT1) |   White   |  3   ||  5   |   White   | Xdata(DT)  |
|------------+-----------+------||------+-----------+------------|
| Xdata(DT)  |   Blue    |  5   ||  3   |   Blue    | Rdata(DT1) |
|------------+-----------+------||------+-----------+------------|
| Xdata(DR)  |   Orange  |  6   ||  4   |   Orange  | Rdata(DR1) |
 -------------------------------  -------------------------------
|                               ||                               |
 -------------------------------  -------------------------------
          From end                          To end
```

*Note: - Check for continuity between these pins.

ENTRY POINTS

FROM	ENTER THIS MAP		
MAP NUMBER	ENTRY POINT	PAGE NUMBER	STEP NUMBER
3023	A	1	001
3028	A	1	001

001
(Entry Point A)

MAP DESCRIPTION:
This MAP contains the DDSA interface charts. It shows all the interface pins on the logic cards and cables supplying the interface. Use the charts to trace any cable problems and to free-lance scoping (line 2).

Chart 1: This chart shows the adapter card to DDSA card interface on the board.

Chart 2: This chart shows the interconnection of the cable lines from the board through the external cable.

Chart 3: This chart shows the DDSA lines jumpered by the cable and cable tower wrap connectors.

Chart 4: This chart shows the interconnections of the DDSA local attach adapter cable P/N 4236967.

START CONDITIONS:
1.The system power is off.
2.The data communications MDI diagnostics were run.

LOGIC CARDS TESTED:
None

© Copyright IBM Corp. 1983

DDSA interface wiring and board wiring

*** CONTINUITY CHECK TABLE ***

- Reinstall the cables.
- Remove the wrap connector.
- Perform the continuity checks specified by the charts below. Also check for grounded lines.
- When the checks are completed, reset the machine to its original configuration.

Chart 2

		Board wires		Board wires		Int cable	Ext cable
		V	V	V	V V	V V	V
Sect	Line name	A C D A A R P D T E R	D C D A S R A D	D C D A S R A D	C C A O B N L N E E C T O R *	C T A O B W L E E R **	M C O A D B M E ***
			L2	L2	A3 Conn		
1	-DS terminal ready	M13	B02	Line not used			
2	-DS data set ready	S10	B13	Note: See the following chart for cable interface wiring.			

3	-DS request to send	P06	D02
4	-DS ring indicate	S07	D12
5	-DS send data space	P13	D04
6	-DS clear to send	S09	D13
7	-Rate select	P10	B04
8	Transmit clock	S08	B07
9	-DS wrap interface	M10	B05
10	-DS receive data space	U10	B10
11	-DS select standby	M05	B03
12	Receive clock	S05	B08
13	-DS new sync	M04	B09
14	-DS carrier detect	S13	B12
15	Ground	D08	D08

* I/O board cable socket
** Cable tower connector (25 pin conn)
*** Modem cable connector (15 pin plug)

Chart 2

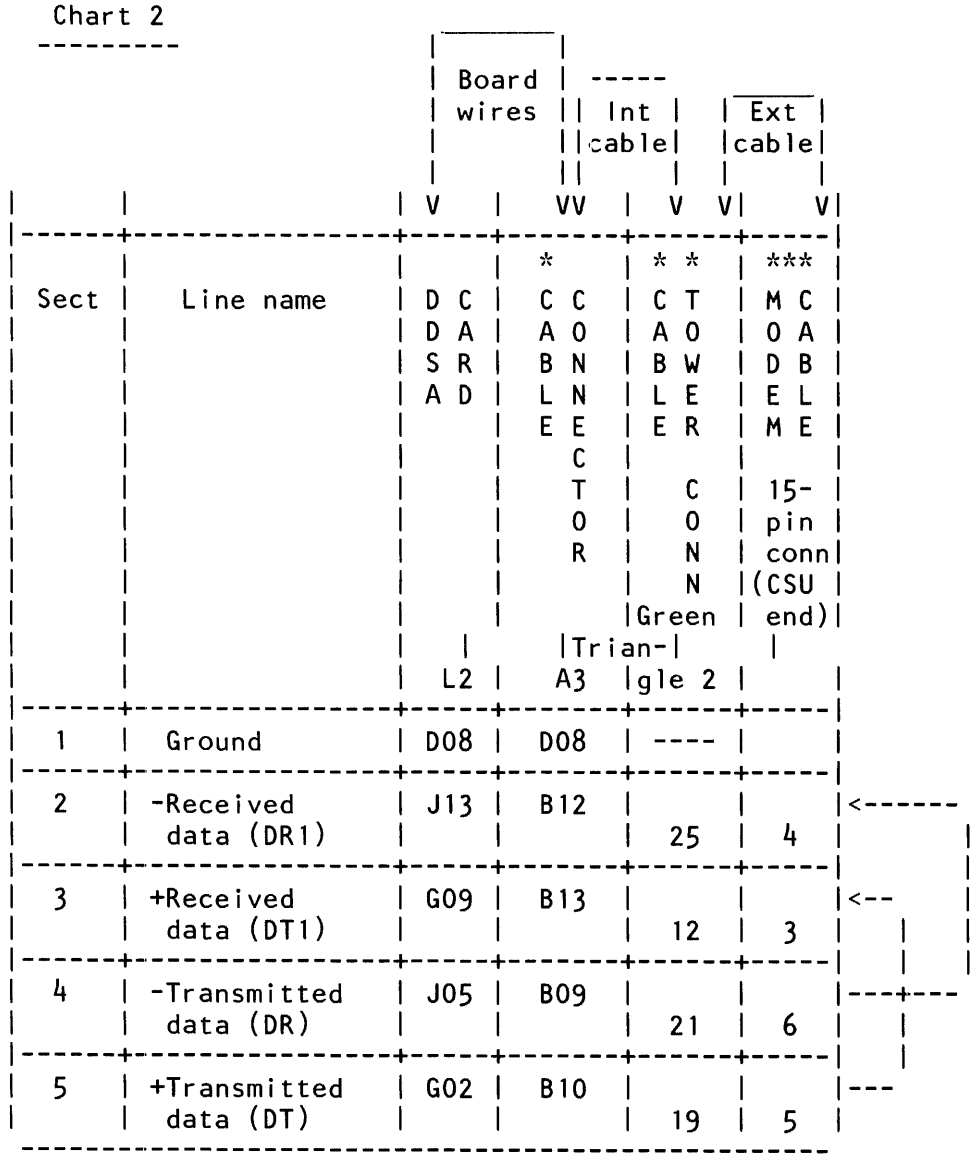

* I/O board cable socket
** Cable tower connector (25 pin conn)
*** Modem cable connector (15 pin plug)

- If you suspect a bad wrap connector, check the wrap connectors for continuity.

Chart 3 - 15-pin connector (end of external cable)

Note: The following lines are jumpered together when the DDSA wrap connector is on the CSU end of the DDSA cable.			
	Connector pin		
	From	To	
-Received data (DR1)	4	6	-Transmitted data (DR)
+Received data (DT1)	3	5	+Transmitted data (DT)

Note: - When completed, remove the wrap jumpers and reinstall the modem cable, if it was removed.

25-pin cable tower wrap connector (for DDSA)

Note: The following DDSA lines are jumpered together when the 25-pin cable tower wrap plug is installed.			
	Connector pin		
	From	To	
-Received data (DR1)	25	21	-Transmitted data (DR)
+Received data (DT1)	12	19	+Transmitted data (DT)

End 'A' of the 2-ended wrap card is used in place of the internal cable to perform a board cable socket wrap.
- If the 2-ended wrap card pn 4233787 (raw card p/n 4233786) is suspect, use this chart to check end 'A' (End 'A' chart continued on next page).

```
 -----------
|  End 'A'
|FROM    TO |
|B09     B12|
|B10     B13)
 -----------
```

Chart 4

DDSA local attach adapter cable

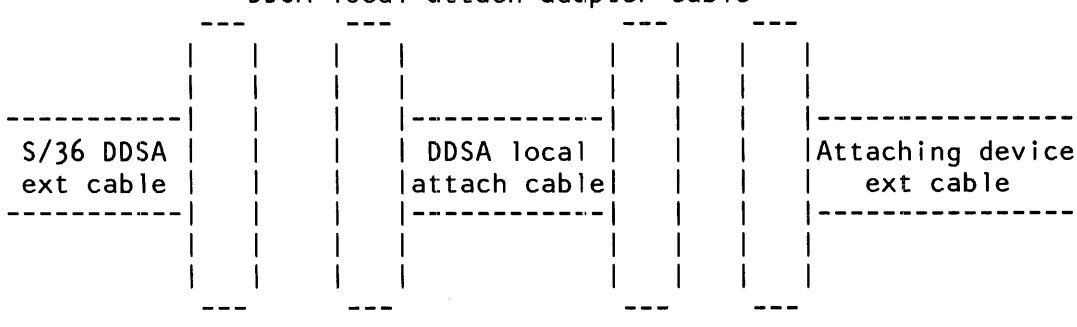

* Note 1

Signal	Wire color	Conn pin	Conn pin	Wire color	Signal
Rdata(DR1)	Red	4	6	Red	Xdata(DR)
Rdata(DT1)	White	3	5	White	Xdata(DT)
Xdata(DT)	Blue	5	3	Blue	Rdata(DT1)
Xdata(DR)	Orange	6	4	Orange	Rdata(DR1)

From end To end

*Note: - Check for continuity between these pins.

ENTRY POINTS			
FROM	ENTER THIS MAP		
MAP NUMBER	ENTRY POINT	PAGE NUMBER	STEP NUMBER
3023	A	1	001
3028	A	1	001

001
(Entry Point A)

MAP DESCRIPTION:
This MAP contains the DDSA interface charts. It shows all the interface pins on the logic cards and cables supplying the interface. Use the charts to trace any cable problems and to free-lance scoping (line 3).

Chart 1: This chart shows the adapter card to DDSA card interface on the board.

Chart 2: This chart shows the interconnection of the cable lines from the board through the external cable.

Chart 3: This chart shows the DDSA lines jumpered by the cable and cable tower wrap connectors.

Chart 4: This chart shows the interconnections of the DDSA local attach adapter cable P/N 4236967.

START CONDITIONS:
1.The system power is off.
2.The data communications MDI diagnostics were run.

LOGIC CARDS TESTED:
None

© Copyright IBM Corp. 1983

DDSA interface wiring and board wiring

*** CONTINUITY CHECK TABLE ***

- Reinstall the cables.
- Remove the wrap connector.
- Perform the continuity checks specified by the charts below. Also check for grounded lines.
- When the checks are completed, reset the machine to its original configuration.

Chart 2

Sect	Line name	Board wires: V	Board wires: V	Board wires: V	Board wires: V	Int cable: V	Int cable: V	Ext cable: V	Ext cable: V
		A D A P T E R	C A R D	D D S A	C A R D	* C A B L E	C O N N E C T O R	** C A B L E	T O W E R	*** M O D E M	C A B L E
			M4		M4	A4	Conn		
1	-DS terminal ready	M13	B02	Line not used					
2	-DS data set ready	S10	B13	Note: See the following chart for cable interface wiring.					

3	-DS request to send	P06	D02
4	-DS ring indicate	S07	D12
5	-DS send data space	P13	D04
6	-DS clear to send	S09	D13
7	-Rate select	P10	B04
8	Transmit clock	S08	B07
9	-DS wrap interface	M10	B05
10	-DS receive data space	U10	B10
11	-DS select standby	M05	B03
12	Receive clock	S05	B08
13	-DS new sync	M04	B09
14	-DS carrier detect	S13	B12
15	Ground	D08	D08

* I/O board cable socket
** Cable tower connector (25 pin conn)
*** Modem cable connector (15 pin plug)

Chart 2

Sect	Line name	Board wires: DDSA CARD M4	Board wires: CABLE CONNECTOR A4	Int cable: CABLE CONNECTOR Green Triangle 3	Ext cable: TOWER CONNECTOR 15-pin conn (CSU end)
1	Ground	D08	D08	----	
2	-Received data (DR1)	J13	B12	25	4
3	+Received data (DT1)	G09	B13	12	3
4	-Transmitted data (DR)	J05	B09	21	6
5	+Transmitted data (DT)	G02	B10	19	5

* I/O board cable socket
** Cable tower connector (25 pin conn)
*** Modem cable connector (15 pin plug)

- If you suspect a bad wrap connector, check the wrap connectors for continuity.

Chart 3 - 15-pin connector (end of external cable)

Note: The following lines are jumpered together when the DDSA wrap connector is on the CSU end of the DDSA cable.

	Connector pin From	To	
-Received data (DR1)	4	6	-Transmitted data (DR)
+Received data (DT1)	3	5	+Transmitted data (DT)

Note: - When completed, remove the wrap jumpers and reinstall the modem cable, if it was removed.

25-pin cable tower wrap connector (for DDSA)

Note: The following DDSA lines are jumpered together when the 25-pin cable tower wrap plug is installed.

	Connector pin From	To	
-Received data (DR1)	25	21	-Transmitted data (DR)
+Received data (DT1)	12	19	+Transmitted data (DT)

End 'A' of the 2-ended wrap card is used in place of the internal cable to perform a board cable socket wrap.
- If the 2-ended wrap card pn 4233787 (raw card p/n 4233786) is suspect, use this chart to check end 'A' (End 'A' chart continued on next page).

End 'A'
FROM TO
B09 B12
B10 B13)

Chart 4

DDSA local attach adapter cable

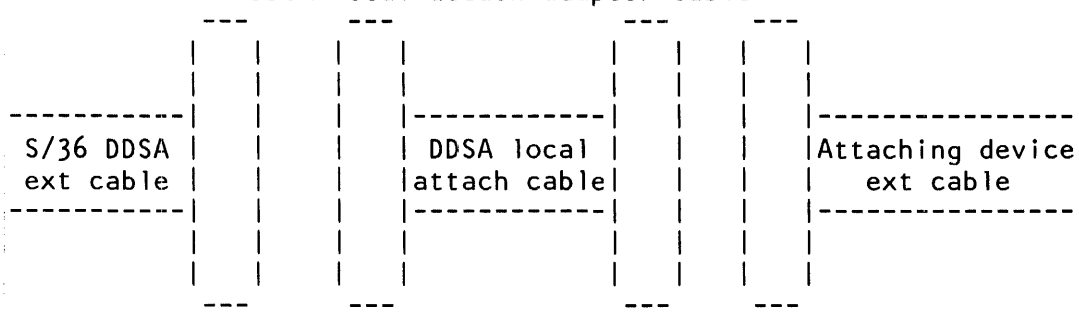

* Note 1

Signal	Wire color	Conn pin	Conn pin	Wire color	Signal
Rdata(DR1)	Red	4	6	Red	Xdata(DR)
Rdata(DT1)	White	3	5	White	Xdata(DT)
Xdata(DT)	Blue	5	3	Blue	Rdata(DT1)
Xdata(DR)	Orange	6	4	Orange	Rdata(DR1)

From end To end

*Note: - Check for continuity between these pins.

ENTRY POINTS		
FROM	ENTER THIS MAP	
MAP NUMBER	ENTRY POINT	PAGE NUMBER	STEP NUMBER
3023	A	1	001
3028	A	1	001

001
(Entry Point A)

MAP DESCRIPTION:
This MAP contains the DDSA interface charts. It shows all the interface pins on the logic cards and cables supplying the interface. Use the charts to trace any cable problems and to free-lance scoping (line 4).

Chart 1: This chart shows the adapter card to DDSA card interface on the board.

Chart 2: This chart shows the interconnection of the cable lines from the board through the external cable.

Chart 3: This chart shows the DDSA lines jumpered by the cable and cable tower wrap connectors.

Chart 4: This chart shows the interconnections of the DDSA local attach adapter cable P/N 4236967.

START CONDITIONS:
1.The system power is off.
2.The data communications MDI diagnostics were run.

LOGIC CARDS TESTED:
None

© Copyright IBM Corp. 1983

DDSA interface wiring and board wiring

*** CONTINUITY CHECK TABLE ***

- Reinstall the cables.
- Remove the wrap connector.
- Perform the continuity checks specified by the charts below. Also check for grounded lines.
- When the checks are completed, reset the machine to its original configuration.

Chart 2

		Board wires		Board wires	Int cable	Ext cable	
		V	V	V	V V	V V	V
Sect	Line name	A C D A R P T E R	D C D A S A D	D C D A S A D	C C A O B N L N E E C T O R *	C T A O B W L E E R **	M C O A D B E L M E ***
		L4	L4	L4	A5 Conn		
1	-DS terminal ready	M13	B02	Line not used			
2	-DS data set ready	S10	B13	Note: See the following chart for cable interface wiring.			

3	-DS request to send	P06	D02
4	-DS ring indicate	S07	D12
5	-DS send data space	P13	D04
6	-DS clear to send	S09	D13
7	-Rate select	P10	B04
8	Transmit clock	S08	B07
9	-DS wrap interface	M10	B05
10	-DS receive data space	U10	B10
11	-DS select standby	M05	B03
12	Receive clock	S05	B08
13	-DS new sync	M04	B09
14	-DS carrier detect	S13	B12
15	Ground	D08	D08

* I/O board cable socket
** Cable tower connector (25 pin conn)
*** Modem cable connector (15 pin plug)

Chart 2

Sect	Line name	Board wires V	Board wires V	Int cable V	Int cable V	Ext cable V
		DDSA CARD	* CABLE CONNECTOR	* * CABLE CONNECTOR	CTOWER CONN Green	*** MODEM CABLE 15-pin conn (CSU end)
		L4	A5	Triangle 4		
1	Ground	D08	D08	----		
2	-Received data (DR1)	J13	B12	25	4	<------
3	+Received data (DT1)	G09	B13	12	3	<--
4	-Transmitted data (DR)	J05	B09	21	6	---+---
5	+Transmitted data (DT)	G02	B10	19	5	---

* I/O board cable socket
** Cable tower connector (25 pin conn)
*** Modem cable connector (15 pin plug)

- If you suspect a bad wrap connector, check the wrap connectors for continuity.

Chart 3 - 15-pin connector (end of external cable)

Note: The following lines are jumpered together when the DDSA wrap connector is on the CSU end of the DDSA cable.			
	Connector pin From	To	
-Received data (DR1)	4	6	-Transmitted data (DR)
+Received data (DT1)	3	5	+Transmitted data (DT)

Note: - When completed, remove the wrap jumpers and reinstall the modem cable, if it was removed.

25-pin cable tower wrap connector (for DDSA)

Note: The following DDSA lines are jumpered together when the 25-pin cable tower wrap plug is installed.			
	Connector pin From	To	
-Received data (DR1)	25	21	-Transmitted data (DR)
+Received data (DT1)	12	19	+Transmitted data (DT)

End 'A' of the 2-ended wrap card is used in place of the internal cable to perform a board cable socket wrap.
- If the 2-ended wrap card pn 4233787 (raw card p/n 4233786) is suspect, use this chart to check end 'A' (End 'A' chart continued on next page).

```
 -----------
|  End 'A'
|FROM    TO |
|B09     B12|
|B10     B13)
 -----------
```

Chart 4

DDSA local attach adapter cable

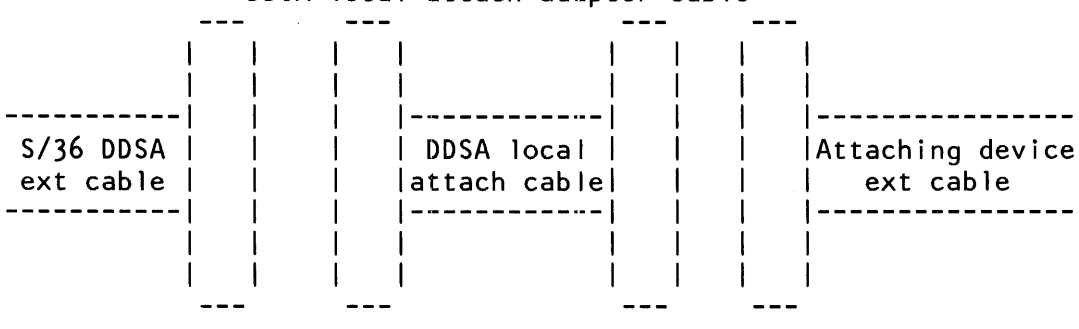

* Note 1

Signal	Wire color	Conn pin		Conn pin	Wire color	Signal
Rdata(DR1)	Red	4		6	Red	Xdata(DR)
Rdata(DT1)	White	3		5	White	Xdata(DT)
Xdata(DT)	Blue	5		3	Blue	Rdata(DT1)
Xdata(DR)	Orange	6		4	Orange	Rdata(DR1)

From end To end

*Note: - Check for continuity between these pins.

ENTRY POINTS

FROM	ENTER THIS MAP		
MAP NUMBER	ENTRY POINT	PAGE NUMBER	STEP NUMBER
3023	A	1	001

EXIT POINTS

EXIT THIS MAP		TO	
PAGE NUMBER	STEP NUMBER	MAP NUMBER	ENTRY POINT
2	002	3008	A
2	003	3008	A
2	002	3009	A
2	003	3009	A
2	002	3024	A
2	002	3025	A
2	002	3026	A
2	002	3027	A
2	002	3029	A

001
(Entry Point A)

- Ensure that the external cable is connected to the external CSU.

- Run the SDLC Online test or the BSCA Online test with the remote system. It is not important which system you select as the Primary (requestor) or the Secondary (responder) (see the maintenance manual section 30-415 or 30-420).
- Ensure that you use the same clock rate.

Does the test run without error?

Y N

2 2
A B

MAP DESCRIPTION:
This MAP runs the DDSA Online test.

START CONDITIONS:
Data communications MDI diagnostics were run.

FRUs PARTIALLY TESTED:
A-A1K2, A-A1G2 (SLCA)
A-A3R2, A-A3M2 (MLCA line 1)
A-A3Q2, A-A3L2 (MLCA line 2)
A-A3P2, A-A3M4 (MLCA line 3)
A-A3N2, A-A3L4 (MLCA line 4)

© Copyright IBM Corp. 1983

002

- Suspect a modem or data communications equipment problem.

Error Log MAP,
Go To Map 3008, Entry Point A.

Intermittent failure replacement list,
Go To Map 3009, Entry Point A.

If SLCA (DDSA continuity chart),
Go To Map 3029, Entry Point A.

If MLCA line 1 (DDSA continuity chart),
Go To Map 3024, Entry Point A.

If line 2 (DDSA continuity chart),
Go To Map 3025, Entry Point A.

If line 3 (DDSA continuity chart),
Go To Map 3026, Entry Point A.

If line 4 (DDSA continuity chart),
Go To Map 3027, Entry Point A.

003

- Suspect a possible program incompatibility problem. Dump and analyze the ERAP data.

Error Log MAP,
Go To Map 3008, Entry Point A.

Intermittent failure replacement list,
Go To Map 3009, Entry Point A.

ENTRY POINTS

FROM MAP NUMBER	ENTER THIS MAP ENTRY POINT	PAGE NUMBER	STEP NUMBER
3023	A	1	001
3028	A	1	001

001
(Entry Point A)

MAP DESCRIPTION:
This MAP contains the DDSA interface charts. It shows all the interface pins on the logic cards and cables supplying the interface. Use the charts to trace any cable problems and to free-lance scoping (SLCA).

Chart 1: This chart shows the adapter card to DDSA card interface on the A-A1 board.

Chart 2: This chart shows the interconnection of the cable lines from the A-A1 board through the external cable.

Chart 3: This chart shows the DDSA lines jumpered by the cable and cable tower wrap connectors.

Chart 4: This chart shows the interconnections of the DDSA local attach adapter cable P/N 4236967.

START CONDITIONS:
1.The system power is off.
2.The data communications MDI diagnostics were run.

LOGIC CARDS TESTED:
None

© Copyright IBM Corp. 1983

DDSA interface wiring and board wiring

*** CONTINUITY CHECK TABLE ***

- Reinstall the cables.
- Remove the wrap connector.
- Perform the continuity checks specified by the charts below. Also check for grounded lines.
- When the checks are completed, reset the machine to its original configuration.

Chart 2

		Board wires		Board wires	Int cable	Ext cable	
		V	V	V	V V	V V	V
Sect	Line name	A C D A A R P D T E R	D C D A S R A D	D C D A S R A D	C C A O B N L N E E C T O R *	C T A O B W L E E R **	M C O A D B E L M E ***
		A-A1 K2	A-A1 G2	A-A1 G2	A-A1 A4	Conn	
1	-DS terminal ready	M13	B02	Line not used			
2	-DS data set ready	S10	B13	Note: See the following chart for cable interface wiring.			

3	-DS request to send	P06	D02
4	-DS ring indicate	S07	D12
5	-DS send data space	P13	D04
6	-DS clear to send	S09	D13
7	-Rate select	P10	B04
8	Transmit clock	S08	B07
9	-DS wrap interface	M10	B05
10	-DS receive data space	U10	B10
11	-DS select standby	M05	B03
12	Receive clock	S05	B08
13	-DS new sync	M04	B09
14	-DS carrier detect	S13	B12
15	Ground	D08	D08

* I/O board cable socket
** Cable tower connector (25 pin conn)
*** Modem cable connector (15 pin plug)

Chart 2

Sect	Line name	Board wires: DDSA CARD (V)	Board wires: CABLE CONNECTOR (V)	Int cable: CABLE TOWER CONN (V)	Ext cable: MODEM CABLE 15-pin conn (CSU end) (V)	
			*	* *	***	
		A-A1 G2	A-A1 A4	Green Triangle 1		
1	Ground	D08	D08	----		
2	-Received data (DR1)	J13	B12	25	4	<------
3	+Received data (DT1)	G09	B13	12	3	<--
4	-Transmitted data (DR)	J05	B09	21	6	---+---
5	+Transmitted data (DT)	G02	B10	19	5	---

* I/O board cable socket
** Cable tower connector (25 pin conn)
*** Modem cable connector (15 pin plug)

- If you suspect a bad wrap connector, check the wrap connectors for continuity.

Chart 3 - 15-pin connector (end of external cable)

Note: The following lines are jumpered together when the DDSA wrap connector is on the CSU end of the DDSA cable.			
	Connector pin From	To	
-Received data (DR1)	4	6	-Transmitted data (DR)
+Received data (DT1)	3	5	+Transmitted data (DT)

Note: - When completed, remove the wrap jumpers and reinstall the modem cable, if it was removed.

25-pin cable tower wrap connector (for DDSA)

Note: The following DDSA lines are jumpered together when the 25-pin cable tower wrap plug is installed.			
	Connector pin From	To	
-Received data (DR1)	25	21	-Transmitted data (DR)
+Received data (DT1)	12	19	+Transmitted data (DT)

End 'A' of the 2-ended wrap card is used in place of the internal cable to perform a board cable socket wrap.
- If the 2-ended wrap card pn 4233787 (raw card p/n 4233786) is suspect, use this chart to check end 'A' (End 'A' chart continued on next page).

End 'A'
FROM TO
B09 B12
B10 B13)

Chart 4

DDSA local attach adapter cable

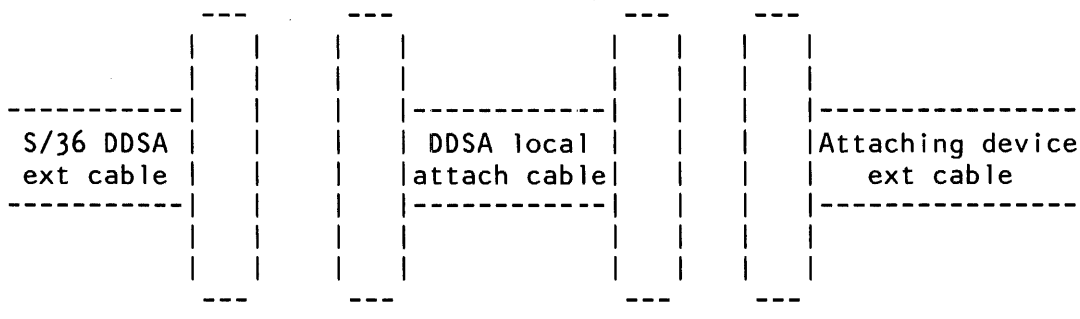

* Note 1

Signal	Wire color	Conn pin	Conn pin	Wire color	Signal
Rdata(DR1)	Red	4	6	Red	Xdata(DR)
Rdata(DT1)	White	3	5	White	Xdata(DT)
Xdata(DT)	Blue	5	3	Blue	Rdata(DT1)
Xdata(DR)	Orange	6	4	Orange	Rdata(DR1)

From end To end

*Note: - Check for continuity between these pins.

ENTRY POINTS

FROM	ENTER THIS MAP		
MAP NUMBER	ENTRY POINT	PAGE NUMBER	STEP NUMBER
3010	A	1	001

EXIT POINTS

EXIT THIS MAP		TO	
PAGE NUMBER	STEP NUMBER	MAP NUMBER	ENTRY POINT
3	019	3032	A
5	022	3032	A
2	015	3034	A
2	013	3035	A
5	024	3054	A

001
(Entry Point A)

Note: For aid in continuity checking and isolation of cable problems, go to MAP 3032, Entry Point A.

MAP DESCRIPTION:
This MAP tests the auto-answer function of the 1200 BPS integrated modem (SLCA).

START CONDITIONS:
The data communications MDI diagnostics have been run.

FRUs PARTIALLY TESTED:
A-A1K2, A-A1G2

Is the DSR display light on?
Y N

002
- The CBS coupler answer switch must be Off (if the coupler has an answer switch).
- The CBS coupler test switch must be Off.
- The system telephone hand set must be cradled.
- Perform system CSIPL using the DIAG21 diagnostic diskette (see note).
- Select mode 1.
- Press the System Reset key.
- Select mode E.
- Enter FF00.
- Insert diskette DIAG21.
- Press the Load key.
- Select the 'TU Select' option on the first display (main option menu).
- Select the failing data communication line.

(Step 002 continues)

Note: If system CSIPL was performed using the diagnostic diskette DIAG21 and the Main Option Menu is displayed or can be displayed by pressing the Attn and Enter keys (system console), skip part 4 of this step).

© Copyright IBM Corp. 1983

(Step 002 continued)
- Enter '70' as the last two digits of the test ID.
- Select option 1 (Execute test, display and stop).

Note: DTR should now be active (DTR indicator on).
Is the DSR display light off?
Y N

003
Bad card:
A-A1G2
---or---
Bad cable:
A-A1A4 to coupler.

004
- Dial the system from a nearby telephone.

(Entry Point B)

Is the system telephone ringing, or does it ring and then stop?
Y N

005
Is there a busy signal?
Y N

006
Go to Step 004, Entry Point B.

007
- Probe the following:

```
Up   Light: On
Down Light: Off
```

A-A1G2G03 (+Off hook).
Are the lights correct?
Y N

B C D

B C D

008
- Check the +Off hook line at the spade lugs on the cable to the CBS coupler again. If OH is up, repair the cable. If it is not up, call the common carrier.

009
- Press the System Reset key.
- Probe the following:

```
Up   Light: Off
Down Light: On
```

A-A1G2B02 (-DS data terminal ready).
Are the lights correct?
Y N

010
Bad card:
A-A1G2.

011
Bad card: A-A1K2.

012
Does the telephone stop ringing?
Y N

013
Go To Map 3035, Entry Point A.

014
Is the 3-second answer tone heard?
Y N

015
Go To Map 3034, Entry Point A.

016
Does the answer tone end and are DTR and DSR the only communications display lights that are on?
Y N

3 3
E F

017
Bad card:
A-A1G2
---or---
A-A1K2.

018
- Recradle all telephones.

- Press the Enter key (run the TU again),

Note: DTR should now be active (DTR display light on).

- Dial a nearby telephone from your local system telephone. Leave the receiver uncradled (off the hook).

- When the nearby telephone rings, pick up its receiver and leave the receiver uncradled (off the hook).

- Hang up the system telephone (cradle the system telephone).

Is the DSR display light on?
Y N

019
Bad card:
A-A1G2.
- Check the (Sw Hook) cable line for continuity and grounding by using of the following MAP.

Go To Map 3032, Entry Point A.

020

- Recradle all the telephones.

- Press the Attn key twice to return to the TU Select menu.
- Run the transmit exerciser test.
- Enter 73 as the last two digits of the test ID.
- Select option 1 (execute test, display and stop).
- Select option 5 (transmit continuous X'16').
- Select option 5 (transmits for 1 hour).

- On the next display screen dial the system telephone from a nearby telephone (do not dial the remote system). Leave the receiver of the nearby telephone uncradled (off the hook).

- Using the dB meter set to bridging, clip the leads to the DT and DR spade lugs at the data coupler and measure the transmit level.

Is the transmit level correct (see note 1)?
Y N

021

- Remove the external cable wires from the DT and DR spade lugs at the data coupler.
- Set the dB meter to 600 ohms termination.
- Clip the dB meter leads to the two removed cable wires and measure the transmit level again.

Is the transmit level now correct?
Y N

022

Bad card:
A-A1G2 (see note 2).

- Remove any jumpers you have installed.
- Reinstall all removed cables.
- Check the data tip and data ring cable lines for continuity and grounding by use of the following MAP.

(Step 022 continues)

When the telephone connection is made, DTR, DSR, RTS and CTS should come active.
(DTR,DSR, RTS & CTS display lights on).
A transmit tone should be heard at the nearby telephone.

Note 1: See section 33-350 of the maintenance manual for the correct transmit level for the country of installation (switched line).
It should be the same as that recorded on the data coupler.
The measured level should be + or - 1 dB from the recorded level.

Note 2: Check the transmit level switches, on the card indicated, for the correct setting according to the coupler requirements. See maintenance manual section 33-310, 320 and 330.

(Step 022 continued)
Go To Map 3032, Entry Point A.

023
There is a possible data coupler problem.

024
- Recradle all telephones.
- Remove any jumpers you have installed.
- Press the System Reset key.

Go To Map 3054, Entry Point A.

025
- Probe the following:

```
Up   Light: Off
Down Light: On
```

A-A1K2M13 (-DS data terminal ready).

Are the lights correct?

Y N

026
- Probe the following:

```
Up   Light: Off
Down Light: On
```

A-A1K2S10 (-DS data set ready).

Are the lights correct?

Y N

027
Bad card: A-A1K2.

028
Bad card:
A-A1G2.

029
Bad card: A-A1K2.

ENTRY POINTS

FROM	ENTER THIS MAP		
MAP NUMBER	ENTRY POINT	PAGE NUMBER	STEP NUMBER
3031	A	1	001
3033	A	1	001
3054	A	1	001

001
(Entry Point A)

Chart 1A = 1200 IM sw US
Chart 1B = 1200 IM n/sw US/WT
Chart 1C = 1200 IM PSN WT
Chart 2 = 1200 IM n/sw wrap plugs and wrap card

MAP DESCRIPTION:
The following charts show the 1200 BPS integrated modem board and cable interface wiring. Use these charts to check continuity and as a free-lance tool in troubleshooting trace signals and data flow for the 1200 IM SLCA.

START CONDITIONS:
The system power is off.

LOGIC CARDS TESTED:
A-A1K2, A-A1G2

1200 BPS integrated modem board and cable interface wiring

*** CONTINUITY CHECK TABLE ***

- If you have a 1200 integrated modem, check for an open or a short circuit as shown in the chart below. Also check for grounded lines.

  Note: If you were sent here from a failing wrap test, first check for an open or short circuit and grounding checks of the failing lines.

© Copyright IBM Corp. 1983

This chart describes the interface between the data communications adapter and the 1200 BPS integrated modem.

		Board wires		Board wires		Cable wires	
		V	V	V	V V		V
					*	**	***
Sect	Line name	A C D A A R P D T E R	1 C 2 A 0 R 0 D M 0 D E M	1 C 2 A 0 R 0 D M 0 D E M	C C A 0 B N L N E E C T 0 R	I C / 0 0 N N E C T 0 R	M C 0 A D B E L M E W C I 0 R L E 0 R
		A-A1 K2	A-A1 G2	A-A1 G2	A-A1 A4		
1	-DS terminal ready	M13	B02				
2	-DS data set ready	S10	B13				
3	-DS request to send	P06	D02				
4	-DS ring indicate	S07	D12				

Note: See the following charts for cable interface wiring for a specific network.

5	-DS transmit data space	P13	D04
6	-DS clear to send	S09	D13
7	-DS high rate	P10	B04
8	Transmit clock	S08	B07
9	-DS wrap interface	M10	B05
10	-DS receive data space	U10	B10
11	-DS select standby	M05	B03
12	Receive clock	S05	B08
13	-DS new sync	M04	B09
14	-DS carrier detect	S13	B12
15	-DS test indicate	P11	D10

* I/O board cable socket
** I/O connector (cable tower, external cable side)
*** Modem cable wires

Chart 1A

1200 integrated modem - switched U.S. and Canada

		Board wires		Internal cable		Ext cable wires		
Sect	Line name	V		VV		VV	V	
		1 C 2 A 0 R 0 D	*	C C A O B N L N E E	* / 0	* C 0 N N E	*** M C O A D B E L M E	
		M O D E M		C T O R	Green	C T O R	W C I O R L E O R	
		A-A1 G2	A-A1	A4	Trian- gle 1			
1	+Data modem ready	J02	D04		20	DA		Yellow
2	+Coupler cut through	J09	D02		6	CCT		Brown
3	+Off hook	G03	D06		4	OH		Blue
4	+Ring indicate	G13	D11		22	RI		Violet
5	Data tip	D05	B03		9	DT		White

6	Sw hook	||	G10	B08	||	5	SH	Red
7	Data ring	||	D08	B07	||	10	DR	Black
8	Signal ground	||	D08	D08	||	7	SG	Gray

* I/O board cable socket
** I/O connector (cable tower, external cable side)
*** Modem cable wires

----- Chart 1B -----

1200 integrated modem - non-switched U.S. or W.T.
(see note 1)

Line name	Board wires	Int cabl asm Note 1	External cable wires
	1 C 2 A 0 R 0 D	* C C A 0 B N L N E E	* * I C / 0 O N N E C T O R
	M O D E M		Green Triangle 1
	A-A1G2	A-A1A4	
-Xmit line	J05	B09	21
+Xmit line	G02	B10	19
+Receive line	G09	B13	12
-Receive line	J13	B12	25

Line name	* * *	
	M O D E M	W I R E
	C A B L E	C O N N E C T O R
-Xmit line	White/Green	
+Xmit line	Red	
+Receive line	Yellow	
-Receive line	Black	

* I/O board cable socket
** I/O connector (cable tower, external cable side)
*** Modem cable wires

Note 1: The 1200 LL internal cable asm contains a surge protect circuit in-line with the cable. This assembly is one FRU.
A continuity check of the internal cable asm from the cable connector to the I/O connector should show about 10 ohms.

----- Chart 1C -----

1200 integrated modem - WT PSN

		Board wires		Inter-nal cable		Ext cable wires		
Sect	Line name	1 C 2 A 0 R 0 D M 0 D E M A-A1 G2	* C C A 0 B N L N E E C T 0 R A-A1 A4	** L I N E P L A I T N E	* * * L I N E P L A 0 T U E T	W C I 0 R L E 0 R
1	-3.5 V	J09	D02	B07		
2	-Data	J02	D04	A04		
3	+Transfer relay	G03	D06	B05		
4	Current detect 2	G13	D11	A02		
5	+8.5 V	G11	B11	B03		
6	Current detect 1	G10	B08	B01		

7	DR (line 2)	D08	B07	B08	TB1-8	White
8	DT (line 1)	D06	B03	A08	TB1-9	Red
9	Handset 2 ****				TB1-6	Black
10	Handset 1 ****				TB1-7	Yellow

* I/O board cable socket
** PSN line plate input (berg conn)
*** Modem cable wires
**** Handset wires

- If you suspect a bad wrap connector, check the wrap connectors for continuity.

Chart 2
283-8, 4-pin connector (end of external cable)

Note: The following lines are jumpered together when the 4 pin wrap plug is connected to the end of the external cable.

	Connector pin From	To	
+Receive line	yellow	red	+Transmit line
-Receive line	black	white/green	-Transmit line

283-B Plug
(end of external cable)

Pin Side

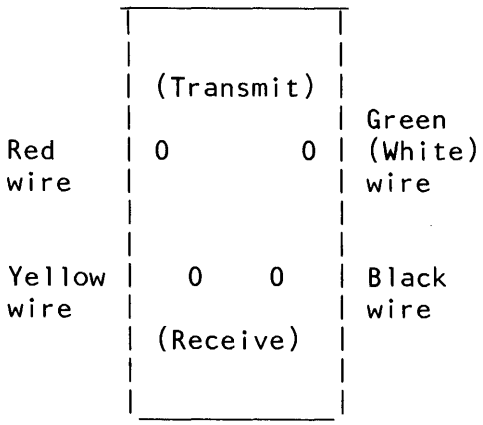

Figure 1

25 pin connector (cable tower wrap)

Note: The following lines are jumpered together when the 25 pin wrap plug is installed at the cable tower.

	Connector pin From	To	
+Receive line	12	19	+Transmit line
-Receive line	25	21	-Transmit line

ENTRY POINTS

FROM	ENTER THIS MAP		
MAP NUMBER	ENTRY POINT	PAGE NUMBER	STEP NUMBER
3010	A	1	001

EXIT POINTS

EXIT THIS MAP		TO	
PAGE NUMBER	STEP NUMBER	MAP NUMBER	ENTRY POINT
2	005	3032	A
7	034	3054	A

001
(Entry Point A)

- Pick up your system telephone.

MAP DESCRIPTION:
This MAP checks the World Trade Public Switched Network (PSN) 1200 integrated modem connection to the telephone network (SLCA).

START CONDITIONS:
The data communications diagnostics were run.

FRUs PARTIALLY TESTED:
Card A-A1G2 card A-A1K2 and WTC PSN line plate

Do you hear a dial tone?
Y N

002
- Use the meter to measure the DC voltage at the B05 berg connector (Transfer relay) on the PSN line plate.

Is the 'Transfer relay' line picked?
For the berg connector location, see Figure 1 in this MAP.

Does the meter read between -2.8 V and -1.0 V?
Y N

003
The PSN line plate is bad.
There is a possible telephone line problem.

© Copyright IBM Corp. 1983

3 2
A B

004

- Use the meter to measure the DC voltage of the 'Transfer relay' line at A-A1G2G03.

Is the 'Transfer relay' line picked?

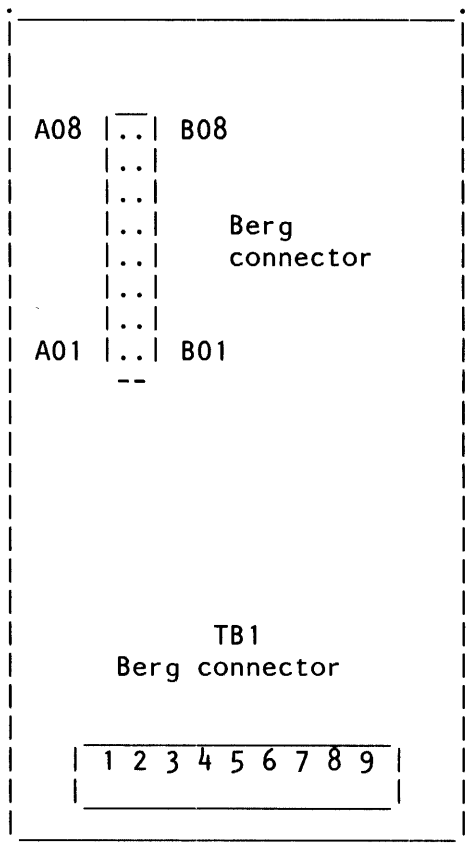

Figure 1

PSN line plate

Does the meter read between -2.8 V and -1.0 V?

Y N

005

- Check the cables for an open (Transfer relay) line.
- To perform this check,

Go To Map 3032, Entry Point A.

006

- Select mode 1.
- Press the System Reset key.
- Use the meter to measure the DC voltage of the 'Transfer relay' line at A-A1G2G03.

Does the meter read between -2.8 V and -1.0 V?

Y N

007

- Hang up your telephone.

Go to Page 1, Step 001, Entry Point A.

008

- Probe the following:

```
Up   Light: Off
Down Light: On
```

A-A1G2B02 (-DS data terminal ready).

Are the lights correct?

Y N

009

Bad card:
A-A1G2.

010

Bad card:
A-A1K2.

011

- Hang up your telephone.

- Press the Attn key (system console) to return to the main menu.
- Select the TU Select option.
- Select the failing data communications line.
- Enter 70 as the last two digits of the test ID.
- Select option 1 (execute test, display and stop).

Is the CE panel DSR display light On?

Y N

- Enable the adapter, and activate the DTR.

012

- Dial system telephone from nearby telephone.
- Wait for at least 3 rings then listen for a 3 second answer tone.

Does the system answer the call?

Y N

013

- Use the meter to measure the DC voltage at the B05 Berg connector.
(Transfer relay) on PSN line plate.

Is the 'Transfer relay' line picked?

Does the meter read between -2.8 V and -1.0 V?

Y N

014

- Use the meter to measure the DC voltage of the 'Transfer relay' line at A-A1G2G03.

Does the meter read between -2.8 V and -1.0 V?

Y N

015

- Probe the following:

```
Up   Light: Off
Down Light: On
```

A-A1G2B02 (-DS data terminal ready).

Are the lights correct?

Y N

016

- Probe the following:
  A-A1G2D12 (-DS ring indicator).

- Ensure that the telephone is ringing while you are probing the ring indicator.

The lights come on when the system telephone is not ringing (between rings).

```
Up   Light: On
Down Light: Off
```

The lights come on when the system telephone is ringing (bell sounding).

```
Up   Light: Off
Down Light: On
```

Are the lights correct?

Y N

017

- Switch probe to MST 2/4, :
  A-A1G2G10 (Current detect 1)
  and
  A-A1G2G13 (Current detect 2).

- Ensure that the telephone is ringing while you are probing.

The lights come on when the system telephone is not ringing (between rings).

```
Up   Light: On
Down Light: Off
```

The lights come on when the system telephone is ringing (bell sounding).

```
Up   Light: On
Down Light: On
```

Are the lights correct for either point probed?

Y N

6 6 6
L M N

018

- Switch probe to MST 2/4, at the PSN line plate.
  Berg connector B01, (Current detect 1)
  and
  Berg connector A02, (Current detect 2).

```
Up   Light: On or flashing
Down Light: On or flashing
```

Are the lights correct for either point probed?

Y N

019

- Check for continuity from the PSN line plate to the telephone line.
  Sig 1. PSN line plate TB1-8, tel line (white) GN.
  Sig 2. PSN line plate TB1-9, tel line (red) R.

020

- Check the (Current detect 1) cable line from Berg-B01 to A-A1A4B08
  and
- Check the (Current detect 2) cable line from Berg-A02 to A-A1A4D11.

021

Bad card:
A-A1G2.

022

- Probe the following:

```
Up   Light: Off
Down Light: On
```

A-A1K2M13 (-DS data terminal ready).

Are the lights correct?

Y N

P Q

023

Bad card:
A-A1K2.

024

There is an open in the board wire from A-A1K2M13 to A-A1G2B02.

025

Bad card:
A-A1G2.

026

- Check the transfer relay cable line from Berg-B05 to A-A1A4D06.

027

- Check for continuity and check for grounded line (Current detect 1) from Berg-B01 to A-A1A4B08.
- Check for continuity and check for grounded line (Current detect 2) from Berg-A02 to A-A1A4D11.

There is a PSN line plate problem
---or---
There is a possible telephone line problem.

028

Is a 3-second answer tone heard?

Y N

029

- Check for continuity and check for grounded line:

  From Berg-A06 to A-A1A4B07 (DR)
  From Berg-A08 to A-A1A4B03 (DT)
  From Berg-A02 to A-A1A4D11 (C.D.2).

Bad card:
A-A1G2.

030

Is the CE panel DSR display light On?

Y N

7 7
R S

031
- Probe the following:

```
Up   Light: Off
Down Light: On
```

A-A1G2B13 (-DS data set ready).
Are the lights correct?
Y N

032
Bad card:
A-A1G2.

033
Bad card:
A-A1K2.

034
Go To Map 3054, Entry Point A.

035
- Probe the following:

```
Up   Light: Off
Down Light: On
```

A-A1G2B13 (-DS data set ready).
Are the lights correct?
Y N

036
Bad card:
A-A1K2.

037
Bad card:
A-A1G2.

1200 IM Answer Tone Line 4

5360 Systems Unit

ENTRY POINTS

FROM	ENTER THIS MAP		
MAP NUMBER	ENTRY POINT	PAGE NUMBER	STEP NUMBER
3031	A	1	001

001
(Entry Point A)

Note: For aid in continuity checking and isolation of the cable problem, see MAP 3032.

MAP DESCRIPTION:
This MAP determines why no answer tone is supplied to incoming calls.

START CONDITIONS:
You have entered this MAP from MAP 3031 and found an error condition.

FRUs PARTIALLY TESTED:
Card A-A1G2

Is the DSR display light on?
Y N

002
- Probe the following:

```
Up   Light: On
Down Light: Off
```

A-A1G2J09 (+Coupler cut through (CCT)).

Are the lights correct?
Y N

003
- Measure the voltage on line CCT at the CBS coupler (use SG (signal ground) as a reference).

Is the line equal to or between +3 V and +15 V?
Y N

2A 2B 2C 2D

© Copyright IBM Corp. 1983

004

- Probe the following:

```
Up    Light: On
Down  Light: Off
```

A-A1G2J02 (+Data modem ready).

Are the lights correct?

Y N

005

While the power is Off and the terminal is removed from the coupler:

- Check for an open or a short circuit in the cable from the CBS coupler SG to A-A1A4D08 (signal ground).

Bad card:
A-A1G2.

006

- Measure the voltage on line DA at the CBS coupler (use SG as a reference).

Is the line equal to or between +3 V and +15 V?

Y N

007

- While the power is Off and the terminal is removed from the coupler, check for an open or short circuit in the cable from the CBS coupler DA to A-A1A4D04 (+Data modem ready).

008

Bad card:
A-A1G2.
There is a CBS coupler problem.

009

- Measure the voltage on the '+Coupler cut through' line again at the A-A1G2J09 modem pin (use A-A1G2J08 (ground) as a reference).

Is the voltage still equal to or between +3 V and +15 V and approximately equal to earlier measurement?

Y N

010

- While the power is Off and the terminal is removed from the coupler, check for an open or a short circuit in the cable from the CBS coupler CCT to A-A1A4D02 (+Coupler cut through).

011

Bad card:
A-A1G2.

012

Bad card:
A-A1G2.

013

- While the power is Off and the terminal is removed from the coupler,
  - Check for an open or short circuit in the cable from the CBS coupler DT to A-A1A4B03 (Data tip).
  - Check for an open or short circuit in the cable from the CBS coupler DR to A-A1A4B07 (Data ring).

Bad card:
A-A1G2.

1200 IM No Answer SLCA

5360 Systems Unit

ENTRY POINTS

FROM	ENTER THIS MAP		
MAP NUMBER	ENTRY POINT	PAGE NUMBER	STEP NUMBER
3031	A	1	001

001
(Entry Point A)

MAP DESCRIPTION:
This MAP determines why the system does not answer incoming calls.

START CONDITIONS:
You have entered this MAP from MAP 3053 and found an error condition.

FRUs PARTIALLY TESTED:
Card A-A1K2, card A-A1G2

Is the control panel DSR light On?
Y N

002
- Probe the following:

```
Up   Light: Off
Down Light: On
```

A-A1K2M13 (-DS data terminal ready).

Are the lights correct?
Y N

003
Bad card:
A-A1K2.

2 A 2 B

© Copyright IBM Corp. 1983

No Answer

5360 Systems Unit

004
Bad card: A-A1G2.

- While the power if Off and the terminals are removed:
- Check for an open or a short circuit in the cable from the CBS coupler OH to A-A1A4D06 (Off hook).
- Check for an open or a short circuit in the cable from the CBS coupler RI to A-A1A4D11 (Ring indicate).

005
- Probe the following:

```
Up    Light: On
Down  Light: Off
```

A-A1G2G03 (+Off hook).

Are the lights correct?

Y N

006
- Probe the following:

```
Up    Light: On
Down  Light: On
```

A-A1G2G13 (+Ring indicate).

Are the lights correct?

Y N

007
- Measure the voltage on the RI (+Ring indicate) line at the CBS coupler (use SG (signal ground) as a reference).

Does the line voltage change when the telephone rings?

Y N

008
There is a CBS coupler problem.

C D E

009
- Check for an open or a short circuit in the cables from the CBS coupler RI to A-A1A4D11 (+Ring indicator).

010
Bad card: A-A1G2.

011
- Measure the voltage on the OH (+Off hook) line at the CBS coupler (use SG (signal ground) as a reference).

Is the line equal to or between +3 V and +15 V?

Y N

012
- Check for an open or a short circuit in the cables from the CBS coupler OH to A-A1A4D06 (+Off hook).

013
There is a CBS coupler problem.

ENTRY POINTS

FROM	ENTER THIS MAP		
MAP * NUMBER	ENTRY POINT	PAGE NUMBER	STEP NUMBER
3010	A	1	001

EXIT POINTS

EXIT THIS MAP		TO	
PAGE NUMBER	STEP NUMBER	MAP NUMBER	ENTRY POINT
5	024	3054	A
3	019	3055	A
5	022	3055	A
2	015	3063	A
2	013	3067	A

001
(Entry Point A)

Note: For aid in continuity checking and isolation of cable problems, go to MAP 3055, Entry Point A.

- For MLCA line 1 perform the following:
- Press the Line Select key.
- Using the input keys, select the number '1'.

Is the DSR display light on?
Y N

002
- The CBS coupler answer switch must be Off (if the coupler has an answer switch).
- The CBS coupler test switch must be Off.
- The system telephone hand set must be cradled.
- Perform system CSIPL using the DIAG21 diagnostic diskette (see note).
- Select mode 1.
- Press the System Reset key.
- Select mode E.
- Enter FF00.
- Insert diskette DIAG21.
- Press the Load key.
- Select the 'TU Select' option on the first display screen (main option menu).
- Select the failing data communication line.

(Step 002 continues)

MAP DESCRIPTION:
This MAP tests the auto-answer function of the 1200 BPS integrated modem (MLCA line 1).

START CONDITIONS:
The data communications MDI diagnostics have been run.

FRUs PARTIALLY TESTED:
A-A3R2, A-A3M2 MLCA line 1

Note: If system CSIPL was performed using the diagnostic diskette DIAG21 and the Main Option Menu is displayed or can be displayed by pressing the Attn and Enter keys (system console), skip part 4 of this step).

© Copyright IBM Corp. 1983

(Step 002 continued)
- Enter '70' as the last two digits of the test ID.
- Select option 1 (Execute test, display and stop).

Note: DTR should now be active (DTR indicator on).
Is the DSR display light off?
Y N

003
Bad card:
A-A3M2
---or---
Bad cable:
A-A3A2 to coupler.

004
- Dial the system from a nearby telephone.

(Entry Point B)

Is the system telephone ringing, or does it ring and then stop?
Y N

005
Is there a busy signal?
Y N

006
Go to Step 004, Entry Point B.

007
- Probe the following:

```
Up   Light: On
Down Light: Off
```

A-A3M2G03 (+Off hook).
Are the lights correct?
Y N

B C D

008
- Check the +Off hook line at the spade lugs on the cable to the CBS coupler again. If OH is up, repair the cable. If it is not up, call the common carrier.

009
- Press the System Reset key.
- Probe the following:

```
Up   Light: Off
Down Light: On
```

A-A3M2B02 (-DS data terminal ready).
Are the lights correct?
Y N

010
Bad card: A-A3M2.

011
Bad card:
A-A3R2.

012
Does the telephone stop ringing?
Y N

013
Go To Map 3067, Entry Point A.

014
Is the 3-second answer tone heard?
Y N

015
Go To Map 3063, Entry Point A.

016
Does the answer tone end and are DTR and DSR the only communications display lights that are on?
Y N

3 3
E F

017
Bad card:
A-A3M2
---or---
A-A3R2.

018
- Recradle all telephones.

- Press the Enter key (run the TU again).

Note: DTR should now be active (DTR display light on).

- Dial a nearby telephone from your local system telephone. Leave the receiver uncradled (off the hook).

- When the nearby telephone rings, pick up its receiver and leave the receiver uncradled (off the hook).

- Hang up the system telephone (cradle the system telephone).

Is the DSR display light on?
Y N

019
Bad card: A-A3M2.
- Check the (Sw Hook) cable line for continuity and grounding by using the following MAP.

Go To Map 3055, Entry Point A.

020

- Recradle all the telephones.

- Press the Attn key twice to return to the TU Select menu.
- Run the transmit exerciser test.
- Enter 73 as the last two digits of the test ID.
- Select option 1 (execute test, display and stop).
- Select option 5 (transmit continuous X'16').
- Select option 5 (transmits for 1 hour).

- On the next display screen dial the system telephone from a nearby telephone (do not dial the remote system). Leave the receiver of the nearby telephone uncradled (off the hook).

- Using the dB meter set to bridging, clip the leads to the DT and DR spade lugs at the data coupler and measure the transmit level.

Is the transmit level correct (see note 1)?

Y N

021

- Remove the external cable wires from the DT and DR spade lugs at the data coupler.
- Set the dB meter to 600 ohms termination.
- Clip the dB meter leads to the two removed cable wires and measure the transmit level again.

Is the transmit level now correct?

Y N

022

Bad card:

A-A3M2 (see note 2).

- Remove any jumpers you have installed.
- Reinstall all removed cables.
- Check the data tip and data ring cable lines for continuity and grounding by use of the following MAP.

(Step 022 continues)

When the telephone connection is made, DTR, DSR, RTS and CTS should come active.
(DTR,DSR, RTS & CTS display lights on.)
A transmit tone should be heard at the nearby telephone.

Note 1: See section 33-350 of the maintenance manual for the correct transmit level for the country of installation (switched line).

It should be the same as that recorded on the data coupler.
The measured level should be + or - 1 dB from the recorded level.

Note 2: Check the transmit level switches, on the card indicated, for the correct setting according to the coupler requirements. See maintenance manual section 33-310, 320 and 330.

(Step 022 continued)
Go To Map 3055, Entry Point A.

023
There is a possible data coupler problem.

024
- Recradle all telephones.
- Remove any jumpers you have installed.

- Press the System Reset key.

Go To Map 3054, Entry Point A.

025
- Probe the following:

```
Up   Light: Off
Down Light: On
```

A-A3R2M13 (- DS data terminal ready)
Are the lights correct?
Y N

026
- Probe the following:

```
Up   Light: Off
Down Light: On
```

A-A3R2S10 (- DS data terminal ready)
Are the lights correct?
Y N

027
Bad card:
A-A3R2.

028
Bad card: A-A3M2.

029
Bad card:
A-A3R2.

ENTRY POINTS

FROM	ENTER THIS MAP		
MAP NUMBER	ENTRY POINT	PAGE NUMBER	STEP NUMBER
3010	A	1	001

EXIT POINTS

EXIT THIS MAP		TO	
PAGE NUMBER	STEP NUMBER	MAP NUMBER	ENTRY POINT
5	024	3054	A
3	019	3056	A
5	022	3056	A
2	015	3064	A
2	013	3068	A

001
(Entry Point A)

Note: For aid in continuity checking and isolation of cable problems, go to MAP 3056, Entry Point A.

- For MLCA line 2 perform the following:
- Press the Line Select key.
- Using the input keys, select the number '2'.

Is the DSR display light on?
Y N

002

1. The CBS coupler answer switch must be Off (if the coupler has an answer switch).
2. The CBS coupler test switch must be Off.
3. The system telephone hand set must be cradled.
4. - Perform system CSIPL using the DIAG21 diagnostic diskette (see note).
   - Select mode 1.
   - Press the System Reset key.
   - Select mode E.
   - Enter FF00.
   - Insert diskette DIAG21.
   - Press the Load key.
5. - Select the 'TU Select' option on the first display (main option menu).

(Step 002 continues)

MAP DESCRIPTION:
This MAP tests the auto-answer function of the 12C BPS integrated modem (MLCA line 2).

START CONDITIONS:
The data communications MDI diagnostics have beer run.

FRUs PARTIALLY TESTED:
A-A3Q2, A-A3L2

Note: If system CSIPL was performed using the diagnostic diskette DIAG21 and the Main Optior Menu is displayed or can be displayed by pressing the Attn and Enter keys (system console), skip part 4 of this step).

© Copyright IBM Corp. 1983

(Step 002 continued)
- Select the failing data communication line.
- Enter '70' as the last two digits of the test ID.
- Select option 1 (Execute test, display and stop).

Note: DTR should now be active (DTR indicator on).
Is the DSR display light off?
Y N

003
Bad card:
A-A3L2
---or---
Bad cable:
A-A3A3 to coupler.

004
- Dial the system from a nearby telephone.

(Entry Point B)

Is the system telephone ringing, or does it ring and then stop?
Y N

005
Is there a busy signal?
Y N

006
Go to Step 004, Entry Point B.

007
- Probe the following:

```
Up   Light: On
Down Light: Off
```

A-A3L2G03 (+Off hook).
Are the lights correct?
Y N

B C D

008
- Check the +Off hook line at the spade lugs on the cable to the CBS coupler again. If OH is up, repair the cable. If it is not up, call the common carrier.

009
- Press the System Reset key.
- Probe the following:

```
Up   Light: Off
Down Light: On
```

A-A3L2B02 (-DS data terminal ready).
Are the lights correct?
Y N

010
Bad card: A-A3L2.

011
Bad card: A-A3Q2.

012
Does the telephone stop ringing?
Y N

013
Go To Map 3068, Entry Point A.

014
Is the 3-second answer tone heard?
Y N

015
Go To Map 3064, Entry Point A.

016
Does the answer tone end and are DTR and DSR the only communications display lights that are on?
Y N

3 3
E F

017
Bad card: A-A3L2.
---or---
A-A3Q2.

018
1. - Recradle all telephones.

2. - Press the Enter key (run the TU again).

Note: DTR should now be active (DTR display light on).

3. - Dial a nearby telephone from your local system telephone. Leave the receiver uncradled (off the hook).

4. - When the nearby telephone rings, pick up its receiver and leave the receiver uncradled (off the hook).

5. - Hang up the system telephone (cradle the system telephone).

Is the DSR display light on?
Y N

019
Bad card: A-A3L2.
- Check the (Sw Hook) cable line for continuity and grounding by using the following MAP.

Go To Map 3056, Entry Point A.

020

- Recradle all the telephones.

- Press the Attn key twice to return to the TU Select menu.
- Run the transmit exerciser test.
- Enter 73 as the last two digits of the test ID.
- Select option 1 (execute test, display and stop).
- Select option 5 (transmit continuous X'16').
- Select option 5 (transmits for 1 hour).

- On the next display screen dial the system telephone from a nearby telephone (do not dial the remote system). Leave the receiver of the nearby telephone uncradled (off the hook).

- Using the dB meter set to bridging, clip the leads to the DT and DR spade lugs at the data coupler and measure the transmit level.

Is the transmit level correct (see note 1)?

Y N

021

- Remove the external cable wires from the DT and DR spade lugs at the data coupler.
- Set the dB meter to 600 ohms termination.
- Clip the dB meter leads to the two removed cable wires and measure the transmit level again.

Is the transmit level now correct?

Y N

022

Bad card:
A-A3L2 (see note 2).

- Remove any jumpers you have installed.
- Reinstall all removed cables.
- Check the data tip and data ring cable lines for continuity and grounding by use of the following MAP.

(Step 022 continues)

When the telephone connection is made, DTR, DSR, RTS and CTS should come active.
(DTR,DSR, RTS & CTS display lights on.)
A transmit tone should be heard at the nearby telephone.

Note 1: See section 33-350 of the maintenance manual for the correct transmit level for the country of installation (switched line).

It should be the same as that recorded on the data coupler.
The measured level should be + or - 1 dB from the recorded level.

Note 2: Check the transmit level switches, on the card indicated, for the correct setting according to the coupler requirements. See maintenance manual section 33-310, 320 and 330.

(Step 022 continued)
Go To Map 3056, Entry Point A.

023
There is a possible data coupler problem.

024
- Recradle all telephones.
- Remove any jumpers you have installed.

- Press the System Reset key.
Go To Map 3054, Entry Point A.

025
- Probe the following:

```
Up   Light: Off
Down Light: On
```

A-A3Q2M13 (-DS data terminal ready).
Are the lights correct?
Y N

026
- Probe the following:

```
Up   Light: Off
Down Light: On
```

A-A3Q2S10 (-DS data set ready).
Are the lights correct?
Y N

027
Bad card: A-A3Q2.

028
Bad card: A-A3L2.

029
Bad card: A-A3Q2.

1200 I.M. Auto Answer Line 3

5360 Systems Unit

PAGE 1 OF 5

ENTRY POINTS

FROM	ENTER THIS MAP		
MAP NUMBER	ENTRY POINT	PAGE NUMBER	STEP NUMBER
3010	A	1	001

EXIT POINTS

EXIT THIS MAP		TO	
PAGE NUMBER	STEP NUMBER	MAP NUMBER	ENTRY POINT
5	024	3054	A
3	019	3057	A
5	022	3057	A
2	015	3065	A
2	013	3069	A

001
(Entry Point A)

Note: For aid in continuity checking and isolation of cable problems, go to MAP 3057, Entry Point A.

For MLCA line 3 perform the following:
- Press the Line Select key.
- Using the input keys, select the number '3'.

Is the DSR display light on?
Y N

002
1. The CBS coupler answer switch must be Off (if the coupler has an answer switch).
2. The CBS coupler test switch must be Off.
3. The system telephone hand set must be cradled.
4. - Perform system CSIPL using the DIAG21 diagnostic diskette (see note).
   - Select mode 1.
   - Press the System Reset key.
   - Select mode E.
   - Enter FF00.
   - Insert diskette DUAG21.
   - Press the Load key.
5. - Select the 'TU Select' option on the first display (main option menu).

(Step 002 continues)

MAP DESCRIPTION:
This MAP tests the auto-answer function of the 120(BPS integrated modem (MLCA line 3).

START CONDITIONS:
The data communications MDI diagnostics have beer run.

FRUs PARTIALLY TESTED:
A-A3P2, A-A3M4

Note: If system CSIPL was performed using the diagnostic diskette DIAG21 and the Main Optior Menu is displayed or can be displayed by pressing the Attn and Enter keys (system console), skip part 4 of this step).

© Copyright IBM Corp. 1983

(Step 002 continued)
- Select the failing data communication line.
- Enter '70' as the last two digits of the test ID.
- Select option 1 (Execute test, display and stop).

Note: DTR should now be active (DTR indicator on).
Is the DSR display light off?
Y N

003
Bad card:
A-A3M4
---or---
Bad cable:
A-A3A4 to coupler.

004
- Dial the system from a nearby telephone.

(Entry Point B)

Is the system telephone ringing, or does it ring and then stop?
Y N

005
Is there a busy signal?
Y N

006
Go to Step 004, Entry Point B.

007
- Probe the following:

```
Up   Light: On
Down Light: Off
```

A-A3M4G03 (+Off hook).
Are the lights correct?
Y N

B C D

B C D

008
Check the +Off hook line at the spade lugs on the cable to the CBS coupler again. If OH is up, repair the cable. If it is not up, call the common carrier.

009
- Press the System Reset key.
- Probe the following:

```
Up   Light: Off
Down Light: On
```

A-A3M4B02 (-DS data terminal ready).
Are the lights correct?
Y N

010
Bad card: A-A3M4.

011
Bad card: A-A3P2.

012
Does the telephone stop ringing?
Y N

013
Go To Map 3069, Entry Point A.

014
Is the 3-second answer tone heard?
Y N

015
Go To Map 3065, Entry Point A.

016
Does the answer tone end and are DTR and DSR the only communications display lights that are on?
Y N

3 3
E F

017
Bad card: A-A3M4.
---or---
A-A3P2.

018
1. - Recradle all telephones.

2. - Press the Enter key (run the TU again).

Note: DTR should now be active (DTR display light on).

3. - Dial a nearby telephone from your local system telephone. Leave the receiver uncradled (off the hook).

4. - When the nearby telephone rings, pick up its receiver and leave the receiver uncradled (off the hook).

5. - Hang up the system telephone (cradle the system telephone).

Is the DSR display light on?
Y N

019
Bad card: A-A3M4.
- Check the (Sw Hook) cable line for continuity and grounding by using the following MAP.

Go To Map 3057, Entry Point A.

020

- Recradle all the telephones.

- Press the Attn key twice to return to the TU Select menu.
- Run the transmit exerciser test.
- Enter 73 as the last two digits of the test ID.
- Select option 1 (execute test, display and stop).
- Select option 5 (transmit continuous X'16').
- Select option 5 (transmits for 1 hour).

- On the next display screen dial the system telephone from a nearby telephone (do not dial the remote system). Leave the receiver of the nearby telephone uncradled (off the hook).

- Using the dB meter set to bridging, clip the leads to the DT and DR spade lugs at the data coupler and measure the transmit level.

Is the transmit level correct (see note 1)?

Y N

021

- Remove the external cable wires from the DT and DR spade lugs at the data coupler.
- Set the dB meter to 600 ohms termination.
- Clip the dB meter leads to the two removed cable wires and measure the transmit level again.

Is the transmit level now correct?

Y N

022

Bad card:

A-A3M4 (see note 2).

- Remove any jumpers you have installed.
- Reinstall all removed cables.
- Check the data tip and data ring cable lines for continuity and grounding by use of the following MAP.

(Step 022 continues)

When the telephone connection is made, DTR, DSR, RTS and CTS should come active.
(DTR,DSR, RTS & CTS display lights on.)
A transmit tone should be heard at the nearby telephone.

Note 1: See section 33-350 of the maintenance manual for the correct transmit level for the country of installation (switched line).
It should be the same as that recorded on the data coupler.
The measured level should be + or - 1 dB from the recorded level.

Note 2: Check the transmit level switches, on the card indicated, for the correct setting according to the coupler requirements. See maintenance manual section 33-310, 320 and 330.

(Step 022 continued)
Go To Map 3057, Entry Point A.

023
There is a possible data coupler problem.

024
- Recradle all telephones.
- Remove any jumpers you have installed.

- Press the System Reset key.
Go To Map 3054, Entry Point A.

025
- Probe the following:

```
Up   Light: Off
Down Light: On
```

A-A3P2M13 (-DS data terminal ready).
Are the lights correct?
Y N

026
- Probe the following:

```
Up   Light: Off
Down Light: On
```

A-A3P2S10 (-DS data set ready).
Are the lights correct?
Y N

027
Bad card: A-A3P2.

028
Bad card: A-A3M4.

029
Bad card: A-A3P2.

ENTRY POINTS

FROM	ENTER THIS MAP		
MAP NUMBER	ENTRY POINT	PAGE NUMBER	STEP NUMBER
3010	A	1	001

EXIT POINTS

EXIT THIS MAP		TO	
PAGE NUMBER	STEP NUMBER	MAP NUMBER	ENTRY POINT
5	024	3054	A
3	019	3058	A
5	022	3058	A
2	015	3066	A
2	013	3070	A

001
(Entry Point A)

Note: For aid in continuity checking and isolation of cable problems, go to MAP 3058, Entry Point A.

- For MLCA line 4 perform the following:
- Press the Line Select key.
- Using the input keys, select the number '4'.

Is the DSR display light on?
Y N

002
1. The CBS coupler answer switch must be Off (if the coupler has an answer switch).
2. The CBS coupler test switch must be Off.
3. The system telephone hand set must be cradled.
4. - Perform system CSIPL using the DIAG21 diagnostic diskette (see note).
   - Select mode 1.
   - Press the System Reset key.
   - Select mode E.
     - Enter FF00.
     - Insert diskette DIAG21.
   - Press the Load key.

5. - Select the 'TU Select' option on the first display (main option menu).

(Step 002 continues)

MAP DESCRIPTION:
This MAP tests the auto-answer function of the 1200 BPS integrated modem (MLCA line 4).

START CONDITIONS:
The data communications MDI diagnostics have been run.

FRUs PARTIALLY TESTED:
A-A3N2, A-A3L4

Note: If system CSIPL was performed using the diagnostic diskette DIAG21 and the Main Option Menu is displayed or can be displayed by pressing the Attn and Enter keys (system console), skip part 4 of this step).

© Copyright IBM Corp. 1983

(Step 002 continued)
- Select the failing data communication line.
- Enter '70' as the last two digits of the test ID.
- Select option 1 (Execute test, display and stop).

Note: DTR should now be active (DTR indicator on).

Is the DSR display light off?

Y N

003
Bad card:
A-A3L4
---or---
Bad cable:
A-A3A5 to coupler.

004
- Dial the system from a nearby telephone.

(Entry Point B)

Is the system telephone ringing, or does it ring and then stop?

Y N

005
Is there a busy signal?

Y N

006
Go to Step 004, Entry Point B.

007
- Probe the following:

```
Up   Light: On
Down Light: Off
```

A-A3L4G03 (+Off hook).

Are the lights correct?

Y N

B C D

B C D

008
- Check the +Off hook line at the spade lugs on the cable to the CBS coupler again. If OH is up, repair the cable. If it is not up, call the common carrier.

009
- Press the System Reset key.
- Probe the following:

```
Up   Light: Off
Down Light: On
```

A-A3L4B02 (-DS data terminal ready).

Are the lights correct?

Y N

010
Bad card:
A-A3L4.

011
Bad card: A-A3N2.

012
Does the telephone stop ringing?

Y N

013
Go To Map 3070, Entry Point A.

014
Is the 3-second answer tone heard?

Y N

015
Go To Map 3066, Entry Point A.

016
Does the answer tone end and are DTR and DSR the only communications display lights that are on?

Y N

3 3
E F

017
Bad card:
A-A3L4
---or---
A-A3N2.

018
1.- Recradle all telephones.

2. - Press the Enter key (run the TU again),

Note: DTR should now be active (DTR display light on).

3. - Dial a nearby telephone from your local system telephone. Leave the receiver uncradled (off the hook).

4. - When the nearby telephone rings, pick up its receiver and leave the receiver uncradled (off the hook).

5. Hang up the system telephone (cradle the system telephone).

Is the DSR display light on?
Y N

019
Bad card:
A-A3L4.
Check the (Sw Hook) cable line for continuity and grounding by using of the following MAP.
Go To Map 3058, Entry Point A.

020

- Recradle all the telephones.

- Press the Attn key twice to return to the TU Select menu.
- Run the transmit exerciser test.
- Enter 73 as the last two digits of the test ID.
- Select option 1 (execute test, display and stop).
- Select option 5 (transmit continuous X'16').
- Select option 5 (transmits for 1 hour).

- On the next display screen dial the system telephone from a nearby telephone (do not dial the remote system). Leave the receiver of the nearby telephone uncradled (off the hook).

- Using the dB meter set to bridging, clip the leads to the DT and DR spade lugs at the data coupler and measure the transmit level.

Is the transmit level correct (see note 1)?

Y N

021

- Remove the external cable wires from the DT and DR spade lugs at the data coupler.
- Set the dB meter to 600 ohms termination.
- Clip the dB meter leads to the two removed cable wires and measure the transmit level again.

Is the transmit level now correct?

Y N

022

Bad card:
A-A3L4 (see note 2).

- Remove any jumpers you have installed.
- Reinstall all removed cables.
- Check the data tip and data ring cable lines for continuity and grounding by use of the following MAP.

(Step 022 continues)

When the telephone connection is made, DTR, DSR, RTS and CTS should come active.
(DTR,DSR, RTS & CTS display lights on).
A transmit tone should be heard at the nearby telephone.

Note 1: See section 33-350 of the maintenance manual for the correct transmit level for the country of installation (switched line).

It should be the same as that recorded on the data coupler.
The measured level should be + or - 1 dB from the recorded level.

Note 2: Check the transmit level switches, on the card indicated, for the correct setting according to the coupler requirements. See maintenance manual section 33-310, 320 and 330.

(Step 022 continued)
Go To Map 3058, Entry Point A.

023
There is a possible data coupler problem.

024
- Recradle all telephones.
- Remove any jumpers you have installed.

- Press the System Reset key.
Go To Map 3054, Entry Point A.

025
- Probe the following:

```
Up   Light: Off
Down Light: On
```

A-A3N2M13 (-DS data terminal ready).
Are the lights correct?
Y N

026
- Probe the following:

```
Up   Light: Off
Down Light: On
```

A-A3N2S10 (-DS data set ready).
Are the lights correct?
Y N

027
Bad card: A-A3N2.

028
Bad card:
A-A3L4.

029
Bad card: A-A3N2.

ENTRY POINTS

FROM	ENTER THIS MAP		
MAP NUMBER	ENTRY POINT	PAGE NUMBER	STEP NUMBER
3010	A	2	001
3031	A	2	001
3033	A	2	001
3050	A	2	001
3051	A	2	001
3052	A	2	001
3053	A	2	001
3059	A	2	001
3060	A	2	001
3061	A	2	001
3062	A	2	001

EXIT POINTS

EXIT THIS MAP		TO	
PAGE NUMBER	STEP NUMBER	MAP NUMBER	ENTRY POINT
10	015	3008	A
10	016	3008	A
10	015	3009	A
10	016	3009	A
6	012	3032	A
9	014	3032	A
10	015	3032	A
10	016	3032	A
4	007	3032	A
7	012	3055	A
10	014	3055	A
10	015	3055	A
10	016	3055	A
4	007	3055	A
7	012	3056	A
10	014	3056	A
10	015	3056	A
10	016	3056	A
4	007	3056	A
7	012	3057	A
10	014	3057	A
10	015	3057	A
10	016	3057	A
4	007	3057	A
7	012	3058	A
10	014	3058	A
10	015	3058	A
10	016	3058	A
5	007	3058	A

© Copyright IBM Corp. 1983

001
(Entry Point A)

- Ensure that the external cable is connected to the telephone line.

MAP DESCRIPTION:
This MAP attempts to establish an Online test with a remote system.

START CONDITIONS:
None

FRUs PARTIALLY TESTED:
SLCA A-A1K2, A-A1G2
MLCA line 1 A-A3R2, A-A3M2
line 2 A-A3Q2, A-A3L2
line 3 A-A3P2, A-A3M4
line 4 A-A3N2, A-A3L4

Is this a non-switched network?
Y N

002
Go to Page 5, Step 010, Entry Point C.

003
- Press the Line Select key (control panel).
- Enter the failing communication line number.
- Perform system CSIPL, using the diagnostic diskette DIAG21 (see note 1).
- Select mode 1.
- Press the System Reset key.
- Select mode E.
- Enter FF00.
- Insert diskette DIAG21.
- Press the Load key.
- Select the 'TU Select' option on the first screen display (Main Option Menu).
- Select the failing data communications line.
- Enter 73 as the last two digits of the test ID.
- Select option 1 (execute test, display and stop).
- Select option 5 (transmits X'16' data.
- Select option 5 (transmits for 1 hour).

Note 1: If system CSIPL was performed using the diagnostic diskette DIAG21 and the Main Option Menu is displayed or can be displayed by pressing the Attn and Enter keys (system console), skip this part of step 003 in this MAP.

DTR, DSR, RTS and CTS should now be active.
Are Display lights DTR, DSR, RTS and CTS on?
Y N

3 3
A B

004

Bad card:
SLCA - A-A1G2
MLCA line 1 - A-A3M2
line 2 - A-A3L2
line 3 - A-A3M4
line 4 - A-A3L4.

005

It is assumed that the data communications external cable is connected to the telephone line.

- Using a dB meter set to bridging, measure the local modem transmit level at the 283-B plug (plug at end of external cable).

The transmit level is measured between the R (red wire) and GN (green or white wire) at the 283-B plug (see Figure 1).

- Remove the plug cover and attach the dB meter leads to the screwheads or partially remove the plug from the outlet and attach them to the prongs.

Note: In World Trade countries except Canada, measure the transmit level (by the locally approved method) at the spade lugs for the line connection.

283-B Plug

Pin Side

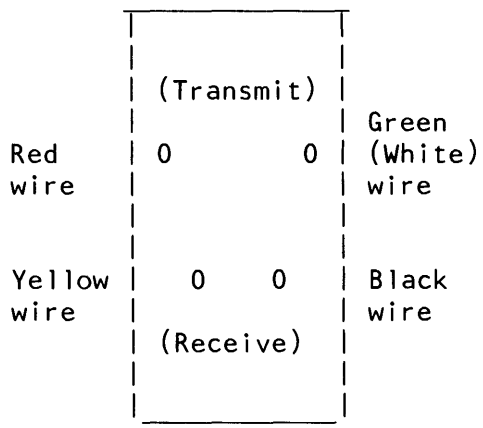

Figure 1

Note A: See section 33-350 in the maintenance manual for the correct transmit level according to country of installation.

The measured level should be equal or -2 dB from the recorded level. The normal recorded level is 0 dB in the U.S. and Canada.

Is the transmit level correct (see Note A)?

Y N

5 4
C D

006

- Set the dB meter to 600 - ohm termination.
- Disconnect the 283-B plug from the line and plug it into the dB meter. If your meter does not have a plug socket, attach the meter leads to the two transmit prongs (see figure 1).

Note: In World Trade countries except Canada, use the locally approved meter and method to measure the transmit level from a terminated modem.

Is the transmit level now correct (see Note A)?

Y N

007

Bad card:
SLCA - A-A1G2
MLCA line 1 - A-A3M2
line 2 - A-A3L2
line 3 - A-A3M4
line 4 - A-A3L4.

---or---

Bad internal/external cable.

- Use the 1200 non-switched continuity charts to check for an open, short circuit or grounded internal cable, external cable or cable tower connector.

If SLCA,

Go To Map 3032, Entry Point A.

If MLCA line 1,
Go To Map 3055, Entry Point A.

If line 2,
Go To Map 3056, Entry Point A.

If line 3,
Go To Map 3057, Entry Point A.

(Step 007 continues)

Note: Check the transmit level switches on the card indicated for the correct setting, according to the country of installation. See maintenance manual sections 30-310, 320 and 330.

(Step 007 continued)
If line 4,
Go To Map 3058, Entry Point A.

008
There is a possible telephone line problem.

009
-Select mode 1 (control panel).

- Press the System Reset key.

Go to Step 010, Entry Point C.

010
(Entry Point C)

- Now run the SDLC or BSCA Online test between th local and remote systems.

The local system may be either the primary (requester or the secondary (responder) but always set up the responder system first. The on-line test start executing as soon as the requester system is set up.
- See maintenance manual section 30-415 or 30-420.

- Ensure that the clocking on both systems is the sam speed and that the use of NRZI or not NRZI is alsc the same.

Does the test run without an error?
Y N

011
(Entry Point B)

- Prepare the remote system for the SDLC Onlin test or the BSCA Online test by making it the secondary (responder) system.
- See maintenance manual section 30-415 o 30-420.

At the local system:

- Perform CSIPL using the DIAG21 diagnostic diskette.
- Select mode 1.
- Press the System Reset key.
- Select mode E.
- Enter FF00.
- Insert diskette DIAG21.
- Press the Load key.
- Select the TU Select option on the first screen display (Main Option Menu).
- Select the failing data communication line.
- Enter 73 as the last two digits of the test ID.

(Step 011 continues)

(Step 011 continued)
- Select option 1 (execute, test, display and stop).

- Select:
  Option 4 if you are running SDLC (sends continuous flags).
  Option 5 if you are running BSC ASCII (sends continuous syns).
  Option 6 if you are running BSC EBCDIC (sends continuous syns).
- Select option 5 (transmits for 1 hour).

If you have a switched network, you will have to make connection.

The following is to be done at the remote system:

If the remote system is a S/36:
- Press the Line Select key.
- Enter the failing data communications line number.

The sync light on the CE panel should come on or flash indicating that continuous syns or flags are being received.

- If the remote system is a 5340, probe:
  (Remote 5340 2-line communications feature code 2500,3500 installed)
  line 1, A-A2J2J09
  line 2, A-A2K2J09.

(Remote 5340 MLCA communications feature code 4500)
(Micro-intr on)
  line 1, A-A3F2J09
  line 2, A-A3G2J09
  line 3, A-A3H2J09
  line 4, A-A3J2J09.

- If the remote system is a 5320, probe A-A2L2J09
  (The Up light on the CE probe should be On and the Down light should flash for the first 20 seconds indicating the receiving of syns or flags).

- If the remote system is not a S/36, 5320 or 5340, (Step 011 continues)

(Step 011 continued)
use an alternate method of determining if continuous syns or continuous flags are being received (see the Remote System's Maintenance Manual Service Guide or Diagnostic Users Guide).

Are continuous syns or flags being received at the remote system?
Y N

012
(For a non-switched network only)

- Select mode 6.
- Press the Power key (power off).
- Check for an open or a short circuit in the cable from:
  (+Transmit line)
  SLCA, A-A1A4B10
MLCA
  line 1, A-A3A2B10
  line 2, A-A3A3B10
  line 3, A-A3A4B10
  line 4, A-A3A5B10
to the 283-B plug (red wire) (+Transmit line).

- Check for an open or a short circuit in the cable from:
  (-Transmit line)
  SLCA, A-A1A4B09
MLCA
  line 1, A-A3A2B09
  line 2, A-A3A3B09
  line 3, A-A3A4B09
  line 4, A-A3A5B09
to the 283-B plug (white/green wire) (-Transmit line).

- Also check these pins for grounded lines.

(For a switched or non-switched network)

If SLCA,
Go To Map 3032, Entry Point A.
(Step 012 continues)

(Step 012 continued)

If MLCA LINE 1,
Go To Map 3055, Entry Point A.

If line 2,
Go To Map 3056, Entry Point A.

If line 3,
Go To Map 3057, Entry Point A.

If line 4,
Go To Map 3058, Entry Point A.

- Use the continuity charts to freelance a cable or cable connector open, short circuit or ground.

```
Bad card: SLCA, A-A1G2
MLCA line 1, A-A3M2
     line 2, A-A3L2
     line 3, A-A3M4
     line 4, A-A3L4.
```

013
(Entry Point D)

- Prepare the local system for the SDLC Online test or the BSCA Online test by making it the secondary (responder) system. See maintenance manual section 30-415 or 30-420.

The following is to be done at the remote system:

If the remote system is a S/36:
- Perform CSIPL using the DIAG21 diagnostic diskette.
- Select mode 1.
- Press the System Reset key.
- Select mode E.
- Enter FF00.
- Insert diskette DIAG21.
- Press the Load key.
- Select the 'TU Select' option on the first screen display (Main Option Menu).
- Select the failing communication line.
- Enter 73 as the last two digits of the test ID.
- Select option 1 (execute test, display and stop).

(Step 013 continues)

(Step 013 continued)

- Select:
  Option 4 if you are running SDLC (sends continuous flags).
  Option 5 if you are running BSC ASCII (sends continuous syns).
  Option 6 if you are running BSC EBCDIC (sends continuous syns).
-Select option 5 (transmits for 1 hour).

If the remote system is a 5340:
- Set Mode Selector to Proc Run (CE panel).
- Set Address/Data switches to X'0000'.
- Set MSIPL to diskette (CE panel).
- Set CSIPL to diskette (CE panel).
- Set all other ce panel switches to their down position.
- Insert diskette DIAGB1.

- Select the communications exerciser test (continuous transmit test). If you have BSCA , send continuous syns, if you have SDLC, make selection for sending continuous flags.
- Select Loop On Cmd table.

- If the remote system is a 5320 and BSCA is installed, load and run BSCA7 (sends continuous syns) from the remote system.
- If SDLC is installed on a remote 5320, load and run SDLC 11 (make selection for sending continuous flags).

- If the remote system is not a S/36, 5320 or 5340, use an alternate method of sending continuous syns or continuous flags (see the Remote System Maintenance Manual, Service Guide or Diagnostic User's Guide).

Note: Make a connection if you have a switched network.

(Step 013 continues)

(Step 013 continued)
- Perform the following at your local system:
- Press the Line Select key.
- Enter the failing data communications.

The sync light on the CE panel should come on or flash indicating continuous syns or flags are being received.

Does the sync light come on or flash?

Y N

014

(For a non-switched network only).

- Select mode 6.
- Press the Power key (power off).

- Check for an open or a short circuit in the cable from:
  (-Receive line)
  SLCA, A-A1A4B12
  MLCA
  line 1, A-A3A2B12
  line 2, A-A3A3B12
  line 3, A-A3A4B12
  line 4, A-A3A5B12
  to the 283-B plug (black wire) (-Receive line).

- Check for an open or a short circuit in the cable from:
  (+Receive line)
  SLCA, A-A1A4B13
  MLCA
  line 1, A-A3A2B13
  line 2, A-A3A3B13
  line 3, A-A3A4B13
  line 4, A-A3A5B13
  to the 283-B plug (yellow wire) (+Receive line).

- Also check these pins for grounded lines.

(For a switched or non-switched network).

- If SLCA,
  Go To Map 3032, Entry Point A.

(Step 014 continues)

(Step 014 continued)

If MLCA line 1,
Go To Map 3055, Entry Point A.

If line 2,
Go To Map 3056, Entry Point A.

If line 3,
Go To Map 3057, Entry Point A.

If line 4,
Go To Map 3058, Entry Point A.

- Use the continuity charts to freelance a cable or cable connector open, short circuit or ground.

- Bad card: SLCA, A-A1G2
  MLCA line 1, A-A3M2
  line 2, A-A3L2
  line 3, A-A3M4
  line 4, A-A3L4

015

- Suspect a CTS/echo clamp incompatibility problem.
- If no problem is found in CTS/echo clamp or if it is not visible, continue below.

Error Log MAP
Go To Map 3008, Entry Point A.

Intermittent Failure Replacement List
Go To Map 3009, Entry Point A.

If SLCA,
Go To Map 3032, Entry Point A.

If MLCA line 1,
Go To Map 3055, Entry Point A.

If line 2,
Go To Map 3056, Entry Point A.

If line 3,
Go To Map 3057, Entry Point A.

(Step 015 continues)

(Step 015 continued)
If line 4,
Go To Map 3058, Entry Point A.

- Use the continuity charts to freelance a cable or cable connector open, short circuit or ground.

016

- A possible program incompatibility problem is suspected. Dump and analyze the ERAP data.

Error Log MAP
Go To Map 3008, Entry Point A.

Intermittent Failure Replacement List
Go To Map 3009, Entry Point A.

If SLCA,
Go To Map 3032, Entry Point A.

If MLCA line 1,
Go To Map 3055, Entry Point A.

If line 2,
Go To Map 3056, Entry Point A.

If line 3,
Go To Map 3057, Entry Point A.

If line 4,
Go To Map 3058, Entry Point A.

- Use the continuity charts to freelance a cable or cable connector open, short circuit or ground.

ENTRY POINTS

FROM MAP NUMBER	ENTER THIS MAP: ENTRY POINT	PAGE NUMBER	STEP NUMBER
3050	A	1	001
3054	A	1	001
3059	A	1	001

001
(Entry Point A)

Chart 1A = 1200 IM sw US
Chart 1B = 1200 IM n/sw US/WT
Chart 1C = 1200 IM PSN WT
Chart 2 = 1200 IM n/sw wrap plugs and wrap card

MAP DESCRIPTION:
The following charts shows the 1200 BPS integrated modem board and cable interface wiring. Use these charts to check continuity and as a free-lance tool in trouble shooting trace signals and data flow for the 1200 IM line 1.

START CONDITIONS:
The system power is off.

LOGIC CARDS TESTED:
A-A3R2, A-A3M2

1200 BPS integrated modem board and cable interface wiring

*** CONTINUITY CHECK TABLE ***

- If you have a 1200 integrated modem, check for an open or a short circuit as shown in the chart below. Also check for grounded lines.

  Note: If you were sent here from a failing wrap test, first check for an open or short circuit and grounding checks of the failing lines.

© Copyright IBM Corp. 1983

This chart describes the interface between the data communications adapter and the 1200 BPS integrated modem.

		Board wires		Board wires		Cable wires	
Sect	Line name	V A C D A A R P D T E R M L C A A-A3 R2	V 1 C 2 A 0 R 0 D M 0 D E M A-A3 M2	V 1 C 2 A 0 R 0 D M 0 D E M A-A3 M2	V V * C C A 0 B N L N E E C T 0 R A-A3 A2	** I C / 0 0 N N E C T 0 R	V *** M C 0 A D B E L M E W C I 0 R L E 0 R
1	-DS terminal ready	M13	B02				
2	-DS data set ready	S10	B13				
3	-DS request to send	P06	D02				
4	-DS ring	S07	D12				

Note: See the following charts for cable interface wiring for a specific network.

	indicate		
5	-DS transmit data space	P13	D04
6	-DS clear to send	S09	D13
7	-DS high rate	P10	B04
8	Transmit clock	S08	B07
9	-DS wrap interface	M10	B05
10	-DS receive data space	U10	B10
11	-DS select standby	M05	B03
12	Receive clock	S05	B08
13	-DS new sync	M04	B09
14	-DS carrier detect	S13	B12
15	-DS test indicate	P11	D10

* I/O board cable socket
** I/O connector (cable tower, external cable side)
*** Modem cable wires

Chart 1A

1200 integrated modem - switched U.S. and Canada

Sect	Line name	Board wires: V	Board wires: VV	Internal cable: VV	Ext cable wires: V		
			*	* *	***		
		1 C	C C	I C	M C		
		2 A	A O	/ O	O A		
		O R	B N	O N	D B		
		O D	L N	N	E L		
			E E	E	M E		
		M	C	C			
		O	T	T			
		D	O	O		W C	
		E	R	R		I O	
		M		Green		R L	
		A-A3	A-A3	Trian-		E O	
		M2	A2	gle 1		R	
1	+Data modem ready	J02	D04	20	DA	Yellow	
2	+Coupler cut through	J09	D02	6	CCT	Brown	
3	+Off hook	G03	D06	4	OH	Blue	
4	+Ring indicate	G13	D11	22	RI	Violet	
5	Data tip	D05	B03	9	DT	White	

6	Sw hook		G10	B08		5	SH	Red
7	Data ring		D08	B07		10	DR	Black
8	Signal ground		D08	D08		7	SG	Gray

* I/O board cable socket
** I/O connector (cable tower, external cable side)
*** Modem cable wires

```
                 ----- Chart 1B -----
1200 integrated modem - non-switched U.S. or W.T.
                     (see note 1)

                       Board   Int    External
                      ------   ----   -------
                     | wires| |cabl| | cable |
                     |      | |asm | | wires |
                     |      | |Note| |       |
                     V      V V 1  V V       V
 ---------------------------------------------------
|                 ||      |   *  | * * |   * * *    |
|   Line name     || 1 C  |  C C | I C |   M        |
|                 || 2 A  |  A O | / O |   O  W     |
|                 || O R  |  B N | O N |   D  I     |
|                 || O D  |  L N |   N |   E  R     |
|                 ||      |  E E |   E |   M  E     |
|                 || M    |    C |   C |            |
|                 || O    |    T |   T |   C  C     |
|                 || D    |    O |   O |   A  O     |
|                 || E    |    R |   R |   B  L     |
|                 || M    |      |Green|   L  O     |
|                 ||      |      |Trian|   E  R     |
|                 ||A-A3M2|A-A3A2|gle 1|            |
|-----------------++------+------+-----+------------|
|-----------------++------+------+-----+------------|
| -Xmit line      || J05  |  B09 |  21 | White/Green|
|-----------------++------+------+-----+------------|
| +Xmit line      || G02  |  B10 |  19 | Red        |
|-----------------++------+------+-----+------------|
| +Receive line   || G09  |  B13 |  12 | Yellow     |
|-----------------++------+------+-----+------------|
| -Receive line   || J13  |  B12 |  25 | Black      |
 ---------------------------------------------------
  *    I/O board cable socket
  **   I/O connector (cable tower, external cable side)
  ***  Modem cable wires

  Note 1: The 1200 LL internal cable asm contains a
          surge protect circuit in-line with the cable.
          This assembly is one FRU.
          A continuity check of the internal cable asm
          from the cable connector to the I/O connector
          should show about 10 ohms.
```

----- Chart 1C -----

1200 integrated modem - WT PSN

Sect	Line name	Board wires	Internal cable	Ext cable wires
		1200 MODEM A-A3 M2	* CABLE CONNECTOR A-A3 A2	** LINE PLATE IN	* * * LINE PLATE OUT WIRE CORE
1	-3.5 V	J09	D02	B07	
2	-Data	J02	D04	A04	
3	+Transfer relay	G03	D06	B05	
4	Current detect 2	G13	D11	A02	
5	+8.5 V	G11	B11	B03	
6	Current detect 1	G10	B08	B01	

7	DR (line 2)	D08	B07	B08	TB1-8	White
8	DT (line 1)	D06	B03	A08	TB1-9	Red
9	Handset 2 ****				TB1-6	Black
10	Handset 1 ****				TB1-7	Yellow

* I/O board cable socket
** PSN line plate input (berg conn)
*** Modem cable wires
**** Handset wires

- If you suspect a bad wrap connector, check the wrap connectors for continuity.

Chart 2
283-B, 4-pin connector (end of external cable)

Note: The following lines are jumpered together when the 4 pin wrap plug is connected to the end of the external cable.

	Connector pin From	To	
+Receive line	yellow	red	+Transmit line
-Receive line	black	white/green	-Transmit line

283-B Plug
(end of external cable)

Pin Side

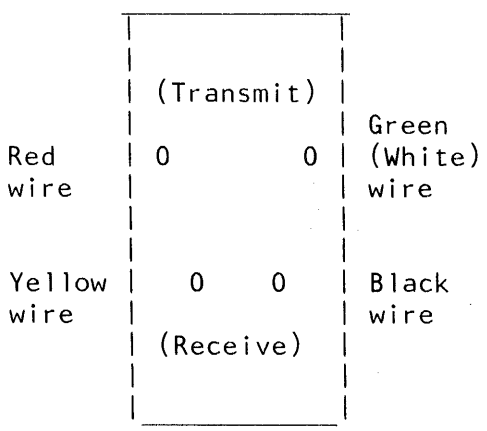

Figure 1

25 pin connector (cable tower wrap)

Note: The following lines are jumpered together when the 25 pin wrap plug is installed at the cable tower.

	Connector pin From	To	
+Receive line	12	19	+Transmit line
-Receive line	25	21	-Transmit line

ENTRY POINTS

FROM	ENTER THIS MAP		
MAP NUMBER	ENTRY POINT	PAGE NUMBER	STEP NUMBER
3051	A	1	001
3054	A	1	001
3060	A	1	001

001
(Entry Point A)

Chart 1A = 1200 IM sw US
Chart 1B = 1200 IM n/sw US/WT
Chart 1C = 1200 IM PSN WT
Chart 2 = 1200 IM n/sw wrap plugs and wrap card

MAP DESCRIPTION:
The following charts show the 1200 BPS integrated modem board and cable interface wiring. Use these charts to check continuity and as a free-lance tool in troubleshooting trace signals and data flow for the 1200 IM line 2.

START CONDITIONS:
The system power is off.

LOGIC CARDS TESTED:
A-A3Q2, A-A3L2

1200 BPS integrated modem board and cable interface wiring

*** CONTINUITY CHECK TABLE ***

- If you have a 1200 integrated modem, check for an open or a short circuit as shown in the chart below. Also check for grounded lines.

  Note: If you were sent here from a failing wrap test, first check for an open or short circuit and grounding checks of the failing lines.

© Copyright IBM Corp. 1983

This chart describes the interface between the data communications adapter and the 1200 BPS integrated modem.

		Board wires		Board wires		Cable wires	
		V	V	V	V V		V
Sect	Line name	A C D A A R P D T E R	1 C 2 A 0 R 0 D M 0 D E M	1 C 2 A 0 R 0 D M 0 D E M	* C C A 0 B N L N E E C T 0 R	** I C / 0 0 N N E C T 0 R	*** M C 0 A D B E L M E W C I 0 R L E 0 R
		A-A3 Q2	A-A3 L2	A-A3 L2	A-A3 A3		
1	-DS terminal ready	M13	B02				
2	-DS data set ready	S10	B13				
3	-DS request to send	P06	D02				
4	-DS ring indicate	S07	D12				

Note: See the following charts for cable interface wiring for a specific network.

5	-DS transmit data space	P13	D04
6	-DS clear to send	S09	D13
7	-DS high rate	P10	B04
8	Transmit clock	S08	B07
9	-DS wrap interface	M10	B05
10	-DS receive data space	U10	B10
11	-DS select standby	M05	B03
12	Receive clock	S05	B08
13	-DS new sync	M04	B09
14	-DS carrier detect	S13	B12
15	-DS test indicate	P11	D10

* I/O board cable socket
** I/O connector (cable tower, external cable side)
*** Modem cable wires

Chart 1A

1200 integrated modem - switched U.S. and Canada

		Board wires		Internal cable		Ext cable wires		
Sect	Line name	1 C 2 A 0 R 0 D M 0 D E M A-A3 L2	C C A 0 B N L N E E C T 0 R A-A3 A3	I / 0 Green Trian- gle 2	C 0 N N E C T 0 R 20	M C 0 A D B E L M E DA	W C I O R L E 0 R Yellow
1	+Data modem ready	J02	D04				
2	+Coupler cut through	J09	D02		6	CCT	Brown
3	+Off hook	G03	D06		4	OH	Blue
4	+Ring indicate	G13	D11		22	RI	Violet
5	Data tip	D05	B03		9	DT	White

6	Sw hook		G10	B08		5	SH	Red
7	Data ring		D08	B07		10	DR	Black
8	Signal ground		D08	D08		7	SG	Gray

* I/O board cable socket
** I/O connector (cable tower, external cable side)
*** Modem cable wires

----- Chart 1B -----

1200 integrated modem - non-switched U.S. or W.T.
(see note 1)

Line name	Board wires	Int cabl asm Note 1	External cable wires	
	V	V V	V V	V
		*	* *	* * *
	1 C 2 A 0 R 0 D	C C A 0 B N L N E E	I C / 0 0 N N E	M 0 W D I E R M E
	M 0 D E M	C T 0 R	C T 0 R Green Trian	C C A 0 B L L 0 E R
	A-A3L2	A-A3A3	gle 2	
-Xmit line	J05	B09	21	White/Green
+Xmit line	G02	B10	19	Red
+Receive line	G09	B13	12	Yellow
-Receive line	J13	B12	25	Black

* I/0 board cable socket
** I/0 connector (cable tower, external cable side)
*** Modem cable wires

Note 1: The 1200 LL internal cable asm contains a surge protect circuit in-line with the cable. This assembly is one FRU.
A continuity check of the internal cable asm from the cable connector to the I/0 connector should show about 10 ohms.

----- Chart 1C -----

1200 integrated modem - WT PSN

Sect	Line name	Board wires: 1200 MODEM A-A3 L2	Board wires: * CABLE CONNECTOR A-A3 A3	Internal cable: ** LINE PLATE IN	Ext cable wires: * * * LINE PLATE OUT	Ext cable wires: WIRE COLOR
1	-3.5 V	J09	D02	B07		
2	-Data	J02	D04	A04		
3	+Transfer relay	G03	D06	B05		
4	Current detect 2	G13	D11	A02		
5	+8.5 V	G11	B11	B03		
6	Current detect 1	G10	B08	B01		

7	DR (line 2)	D08	B07	B08	TB1-8	White
8	DT (line 1)	D06	B03	A08	TB1-9	Red
9	Handset 2 ****				TB1-6	Black
10	Handset 1 ****				TB1-7	Yellow

* I/O board cable socket
** PSN line plate input (berg conn)
*** Modem cable wires
**** Handset wires

- If you suspect a bad wrap connector, check the wrap connectors for continuity.

Chart 2
283-B, 4-pin connector (end of external cable)

Note: The following lines are jumpered together when the 4 pin wrap plug is connected to the end of the external cable.

	Connector pin From	To	
+Receive line	yellow	red	+Transmit line
-Receive line	black	white/green	-Transmit line

283-B Plug
(end of external cable)

Pin Side

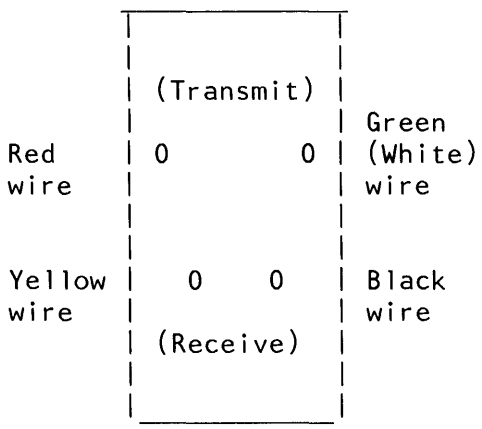

Figure 1

25 pin connector (cable tower wrap)

Note: The following lines are jumpered together when the 25 pin wrap plug is installed at the cable tower.

	Connector pin From	To	
+Receive line	12	19	+Transmit line
-Receive line	25	21	-Transmit line

ENTRY POINTS

FROM MAP NUMBER	ENTER THIS MAP: ENTRY POINT	PAGE NUMBER	STEP NUMBER
3052	A	1	001
3054	A	1	001
3061	A	1	001

001
(Entry Point A)

Chart 1A = 1200 IM sw US
Chart 1B = 1200 IM n/sw US/WT
Chart 1C = 1200 IM PSN WT
Chart 2 = 1200 IM n/sw wrap plugs and wrap card

MAP DESCRIPTION:
The following charts show the 1200 BPS integrated modem board and cable interface wiring. Use these charts to check continuity and as a free-lance tool in troubleshooting trace signals and data flow for the 1200 IM line 3.

START CONDITIONS:
The system power is off.

LOGIC CARDS TESTED:
A-A3P2, A-A3M4

1200 BPS integrated modem board and cable interface wiring

*** CONTINUITY CHECK TABLE ***

- If you have a 1200 integrated modem, check for an open or a short circuit as shown in the chart below. Also check for grounded lines.

  Note: If you were sent here from a failing wrap test, first check for an open or short circuit and grounding checks of the failing lines.

© Copyright IBM Corp. 1983

This chart describes the interface between the data communications adapter and the 1200 BPS integrated modem.

		Board wires		Board wires		Cable wires			
Sect	Line name	A C D A A R P D T E R	1 C 2 A 0 R 0 D M 0 D E M	1 C 2 A 0 R 0 D M 0 D E M	C C A 0 B N L N E E C T 0 R	*	I C / 0 0 N N E C T 0 R	**	M C 0 A D B E L M E W C I 0 R L E 0 R	***
		A-A3 P2	A-A3 M4	A-A3 M4	A-A3 A4					
1	-DS terminal ready	M13	B02							
2	-DS data set ready	S10	B13							
3	-DS request to send	P06	D02							
4	-DS ring indicate	S07	D12							

Note: See the following charts for cable interface wiring for a specific network.

5	-DS transmit data space	P13	D04
6	-DS clear to send	S09	D13
7	-DS high rate	P10	B04
8	Transmit clock	S08	B07
9	-DS wrap interface	M10	B05
10	-DS receive data space	U10	B10
11	-DS select standby	M05	B03
12	Receive clock	S05	B08
13	-DS new sync	M04	B09
14	-DS carrier detect	S13	B12
15	-DS test indicate	P11	D10

* I/O board cable socket
** I/O connector (cable tower, external cable side)
*** Modem cable wires

Chart 1A

1200 integrated modem - switched U.S. and Canada

		Board wires		Internal cable		Ext cable wires		
Sect	Line name	1 C 2 A 0 R 0 D M 0 D E M A-A3 M4	C C A O B N L N E E C T O R A-A3 A4	* * I C / O O N N E C T O R Green Trian- gle 3	20	*** M C O A D B E L M E DA	W C I O R L E O R	Yellow
1	+Data modem ready	J02	D04		20	DA		Yellow
2	+Coupler cut through	J09	D02		6	CCT		Brown
3	+Off hook	G03	D06		4	OH		Blue
4	+Ring indicate	G13	D11		22	RI		Violet
5	Data tip	D05	B03		9	DT		White

6	Sw hook	G10	B08	5	SH	Red
7	Data ring	D08	B07	10	DR	Black
8	Signal ground	D08	D08	7	SG	Gray

* I/O board cable socket
** I/O connector (cable tower, external cable side)
*** Modem cable wires

----- Chart 1B -----

1200 integrated modem - non-switched U.S. or W.T.
(see note 1)

Line name	Board wires		Int cabl asm Note 1		External cable wires	
		*	* *		* * *	
	1 C 2 A 0 R 0 D	C C A 0 B N L N E E	I C / 0 0 N N E	M 0 W D I E R M E		
	M 0 D E M	C T 0 R	C T 0 R	C C A 0 B L L 0 E R		
	A-A3M4	A-A3A4	Green Trian gle 3			
-Xmit line	J05	B09	21	White/Green		
+Xmit line	G02	B10	19	Red		
+Receive line	G09	B13	12	Yellow		
-Receive line	J13	B12	25	Black		

* I/O board cable socket
** I/O connector (cable tower, external cable side)
*** Modem cable wires

Note 1: The 1200 LL internal cable asm contains a surge protect circuit in-line with the cable. This assembly is one FRU.
A continuity check of the internal cable asm from the cable connector to the I/O connector should show about 10 ohms.

----- Chart 1C -----

1200 integrated modem - WT PSN

		Board wires	Internal cable	Ext cable wires	
Sect	Line name	1C 2A 0R 0D MOD E M A-A3 M4	* C C A O B N L N E E C T O R A-A3 A4	** L I N E P L A I T N E	* * * L I N E P L A 0 T U E T W C I 0 R L E 0 R
1	-3.5 V	J09	D02	B07	
2	-Data	J02	D04	A04	
3	+Transfer relay	G03	D06	B05	
4	Current detect 2	G13	D11	A02	
5	+8.5 V	G11	B11	B03	
6	Current detect 1	G10	B08	B01	

7	DR (line 2)	D08	B07	B08	TB1-8	White
8	DT (line 1)	D06	B03	A08	TB1-9	Red
9	Handset 2 ****				TB1-6	Black
10	Handset 1 ****				TB1-7	Yellow

* I/O board cable socket
** PSN line plate input (berg conn)
*** Modem cable wires
**** Handset wires

- If you suspect a bad wrap connector, check the wrap connectors for continuity.

Chart 2
283-B, 4-pin connector (end of external cable)

Note: The following lines are jumpered together when the 4 pin wrap plug is connected to the end of the external cable.

	Connector pin From	To	
+Receive line	yellow	red	+Transmit line
-Receive line	black	white/green	-Transmit line

283-B Plug
(end of external cable)

Pin Side

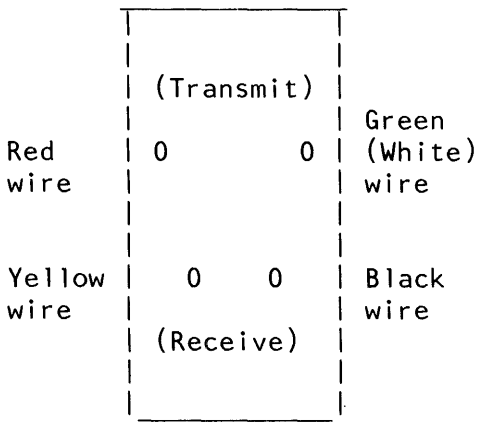

Figure 1

25 pin connector (cable tower wrap)

Note: The following lines are jumpered together when the 25 pin wrap plug is installed at the cable tower.

	Connector pin From	To	
+Receive line	12	19	+Transmit line
-Receive line	25	21	-Transmit line

ENTRY POINTS

FROM	ENTER THIS MAP		
MAP NUMBER	ENTRY POINT	PAGE NUMBER	STEP NUMBER
3053	A	1	001
3054	A	1	001
3062	A	1	001

001
(Entry Point A)

Chart 1A = 1200 IM sw US
Chart 1B = 1200 IM n/sw US/WT
Chart 1C = 1200 IM PSN WT
Chart 2 = 1200 IM n/sw wrap plugs and wrap card

MAP DESCRIPTION:
The following charts show the 1200 BPS integrated modem board and cable interface wiring. Use these charts to check continuity and as a free-lance tool in troubleshooting trace signals and data flow for the 1200 IM line 4.

START CONDITIONS:
The system power is off.

LOGIC CARDS TESTED:
A-A3N2, A-A3L4

1200 BPS integrated modem board and cable interface wiring

*** CONTINUITY CHECK TABLE ***

- If you have a 1200 integrated modem, check for an open or a short circuit as shown in the chart below. Also check for grounded lines.

  Note: If you were sent here from a failing wrap test, first check for an open or short circuit and grounding checks of the failing lines.

© Copyright IBM Corp. 1983

This chart describes the interface between the data communications adapter and the 1200 BPS integrated modem.

		Board wires		Board wires		Cable wires	
Sect	Line name	V A C D A A R P D T E R A-A3 N2	V 1 C 2 A 0 R 0 D M 0 D E M A-A3 L4	V 1 C 2 A 0 R 0 D M 0 D E M A-A3 L4	V V * C C A 0 B N L N E E C T 0 R A-A3 A5	** I C / 0 0 N N E C T 0 R	V *** M C 0 A D B E L M E W C I 0 R L E 0 R
1	-DS terminal ready	M13	B02				
2	-DS data set ready	S10	B13				
3	-DS request to send	P06	D02				
4	-DS ring indicate	S07	D12				

Note: See the following charts for cable interface wiring for a specific network.

5	-DS transmit data space	P13	D04
6	-DS clear to send	S09	D13
7	-DS high rate	P10	B04
8	Transmit clock	S08	B07
9	-DS wrap interface	M10	B05
10	-DS receive data space	U10	B10
11	-DS select standby	M05	B03
12	Receive clock	S05	B08
13	-DS new sync	M04	B09
14	-DS carrier detect	S13	B12
15	-DS test indicate	P11	D10

* I/O board cable socket
** I/O connector (cable tower, external cable side)
*** Modem cable wires

Chart 1A

1200 integrated modem - switched U.S. and Canada

Sect	Line name	Board wires V	Internal cable VV	Internal cable VV	Ext cable wires V		
			*	* *	***		
		1 C	C C	I C	M C		
		2 A	A O	/ O	O A		
		0 R	B N	O N	D B		
		0 D	L N	N	E L		
			E E	E	M E		
		M	C	C			
		O	T	T			
		D	O	O		W C	
		E	R	R		I O	
		M		Green		R L	
		A-A3	A-A3	Trian-		E O	
		L4	A5	gle 4		R	
1	+Data modem ready	J02	D04	20	DA	Yellow	
2	+Coupler cut through	J09	D02	6	CCT	Brown	
3	+Off hook	G03	D06	4	OH	Blue	
4	+Ring indicate	G13	D11	22	RI	Violet	
5	Data tip	D05	B03	9	DT	White	

6	Sw hook	||	G10	B08	||	5	SH	Red
7	Data ring	||	D08	B07	||	10	DR	Black
8	Signal ground	||	D08	D08	||	7	SG	Gray

* I/O board cable socket
** I/O connector (cable tower, external cable side)
*** Modem cable wires

```
                 ----- Chart 1B -----
1200 integrated modem - non-switched U.S. or W.T.
                    (see note 1)

                        Board   Int    External
                       ------   ----   -------
                      | wires| |cabl| | cable |
                      |      | |asm | | wires |
                      |      | |Note| |       |
                      V      V V 1  V V       V
 ---------------------------------------------------
|                  ||      |   *  | * * |   * * *    |
|   Line name      || 1 C  |  C C | I C |   M        |
|                  || 2 A  |  A O | / O |   O  W     |
|                  || 0 R  |  B N | O N |   D  I     |
|                  || 0 D  |  L N |   N |   E  R     |
|                  ||      |  E E |   E |   M  E     |
|                  || M    |    C |   C |            |
|                  || O    |    T |   T |   C  C     |
|                  || D    |    O |   O |   A  O     |
|                  || E    |    R |   R |   B  L     |
|                  || M    |      |Green|   L  O     |
|                  ||      |      |Trian|   E  R     |
|                  ||A-A3L4|A-A3A5|gle 4|            |
|-----------------++------+------+-----+------------|
|-----------------++------+------+-----+------------|
| -Xmit line       || J05  |  B09 |  21 | White/Green|
|-----------------++------+------+-----+------------|
| +Xmit line       || G02  |  B10 |  19 | Red        |
|-----------------++------+------+-----+------------|
| +Receive line    || G09  |  B13 |  12 | Yellow     |
|-----------------++------+------+-----+------------|
| -Receive line    || J13  |  B12 |  25 | Black      |
 ---------------------------------------------------
  *    I/O board cable socket
  **   I/O connector (cable tower, external cable side)
  ***  Modem cable wires

  Note 1: The 1200 LL internal cable asm contains a
          surge protect circuit in-line with the cable.
          This assembly is one FRU.
          A continuity check of the internal cable asm
          from the cable connector to the I/O connector
          should show about 10 ohms.
```

----- Chart 1C -----

1200 integrated modem - WT PSN

		Board wires		Internal cable		Ext cable wires		
		V	VV	VV	V			
Sect	Line name	1 C 2 A 0 R 0 D M 0 D E M A-A3 L4	* C C A 0 B N L N E E C T 0 R A-A3 A5	**	* * *			
1	-3.5 V	J09	D02	B07				
2	-Data	J02	D04	A04				
3	+Transfer relay	G03	D06	B05				
4	Current detect 2	G13	D11	A02				
5	+8.5 V	G11	B11	B03				
6	Current detect 1	G10	B08	B01				

7	DR (line 2)	D08	B07	B08	TB1-8	White
8	DT (line 1)	D06	B03	A08	TB1-9	Red
9	Handset 2 ****				TB1-6	Black
10	Handset 1 ****				TB1-7	Yellow

* I/O board cable socket
** PSN line plate input (berg conn)
*** Modem cable wires
**** Handset wires

- If you suspect a bad wrap connector, check the wrap connectors for continuity.

Chart 2
283-B, 4-pin connector (end of external cable)

Note: The following lines are jumpered together when the 4 pin wrap plug is connected to the end of the external cable.

	Connector pin From	To	
+Receive line	yellow	red	+Transmit line
-Receive line	black	white/green	-Transmit line

283-B Plug
(end of external cable)

Pin Side

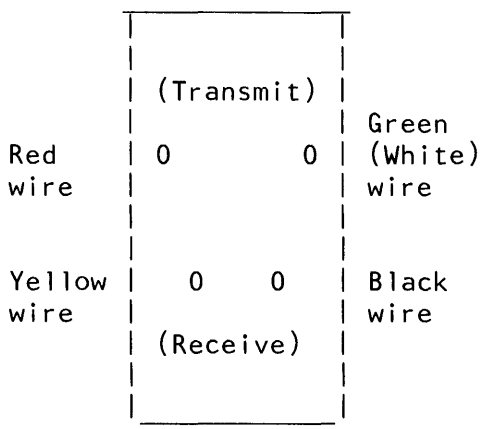

Figure 1

25 pin connector (cable tower wrap)

Note: The following lines are jumpered together when the 25 pin wrap plug is installed at the cable tower.

	Connector pin From	To	
+Receive line	12	19	+Transmit line
-Receive line	25	21	-Transmit line

ENTRY POINTS

FROM	ENTER THIS MAP		
MAP NUMBER	ENTRY POINT	PAGE NUMBER	STEP NUMBER
3010	A	1	001

EXIT POINTS

EXIT THIS MAP		TO	
PAGE NUMBER	STEP NUMBER	MAP NUMBER	ENTRY POINT
7	034	3054	A
2	005	3055	A

001
(Entry Point A)

- Pick up your system telephone.

MAP DESCRIPTION:
This MAP checks the World Trade Public Switched Network (PSN) 1200 integrated modem connection to the telephone network (line 1).

START CONDITIONS:
The data communications diagnostics were run.

FRUs PARTIALLY TESTED:
A-A3R2, A-A3M2 and WTC PSN line plate

Do you hear a dial tone?
Y N

002
- Use the meter to measure the DC voltage at the B05 berg connector 'Transfer relay' on the PSN line plate.

Is the 'Transfer relay' line picked?

For the berg connector location, see Figure 1 in this MAP.

Does the meter read between -2.8 V and -1.0 V?
Y N

003
The PSN line plate is bad.
There is a possible telephone line problem.

© Copyright IBM Corp. 1983

3 2
A B

004

- Use the meter to measure the DC voltage of the 'Transfer relay' line at A-A3M2G03.

Is the 'Transfer relay' line picked?

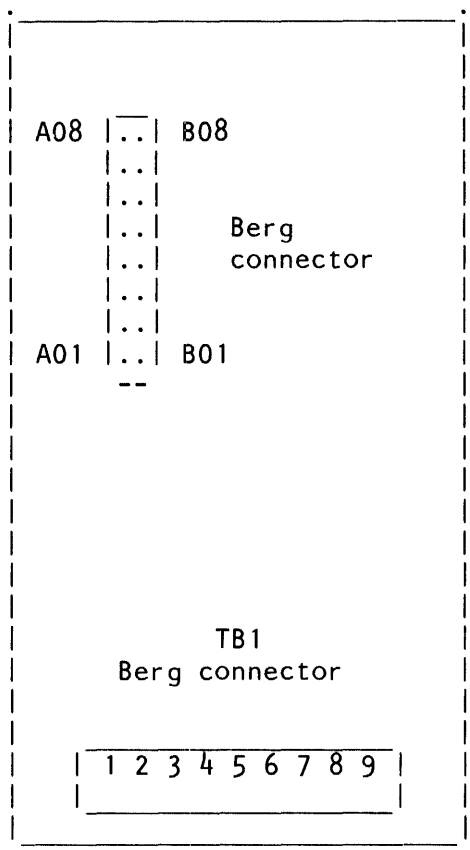

Figure 1

PSN line plate

Does the meter read between -2.8 V and -1.0 V?

Y **N**

005

- Check the cables for an open (Transfer relay) line. To do this check,

Go To Map 3055, Entry Point A.

006

- Select mode 1.
- Press the System Reset key.
- Use the meter to measure the DC voltage of (Transfer relay) at A-A3M2G03.

Does the meter read between -2.8 V and -1.0 V?

Y N

007

- Hang up your telephone.

Go to Page 1, Step 001, Entry Point A.

008

- Probe the following:

```
Up   Light: Off
Down Light: On
```

A-A3M2B02 (-DS data terminal ready).

Are the lights correct?

Y N

009

Bad card:
A-A3M2.

010

Bad card:
A-A3R2.

011

- Hang up your telephone.

- Press the Attn key (system console) to return to the main menu.
- Select the TU Select option.
- Select the failing data communications line.
- Enter 70 as the last two digits of the test ID.
- Select option 1 (execute test, display and stop).

Is the CE panel DSR display light On?

Y N

- Enable the adapter, and activate DTR.

012

- Dial the system telephone from nearby telephone.
- Wait for at least 3 rings then listen for a 3 second answer tone.

Does the phone stop ringing?

Y N

013

- Use the meter to measure the DC voltage at the B05 berg connector (Transfer relay) on PSN line plate.

Is the 'Transfer relay' line picked?

Does the meter read between -2.8 V and -1.0 V?

Y N

014

- Use the meter to measure the DC voltage of (Transfer Relay) at A-A3M2G03.

Does the meter read between -2.8 V and -1.0 V?

Y N

015

- Probe the following:

```
Up   Light: Off
Down Light: On
```

A-A3M2B02 (-DS data terminal ready).

Are the lights correct?

Y N

016

- Probe the following:
  A-A3M2D12 (-DS ring indicator).

- Ensure that the telephone is ringing while you are probing ring indicator.

The lights come on when the system telephone is not ringing (between rings).

```
Up   Light: On
Down Light: Off
```

The lights come on when the system telephone is ringing (bell sounding).

```
Up   Light: Off
Down Light: On
```

Are the lights correct?

Y N

017

- Switch probe to MST 2/4, :
  A-A3M2G10, (Current detect 1)
  and
  A-A3M2G13, (Current detect 2).

- Ensure that the telephone is ringing while you are probing.

The lights come on when the system telephone is not ringing (between rings).

```
Up   Light: On
Down Light: Off
```

The lights come on when the system telephone is ringing (bell sounding).

```
Up   Light: On
Down Light: On
```

Are the lights correct for either point probed?

Y N

6 6 6
L M N

018

- Switch probe to MST 2/4, at the PSN line plate.
  Berg connector B01, (Current detect 1)
  and
  Berg connector A02, (Current detect 2).

```
Up   Light: On or flashing
Down Light: On or flashing
```

Are the lights correct for either point probed?

Y N

019

- Check for continuity from the PSN line plate to the telephone line.
  Sig 1. PSN line plate TB1-8, tel line (white) GN.
  Sig 2. PSN line plate TB1-9, tel line (red) R.

020

- Check the (Current detect 1) cable line from Berg-B01 to A-A3A2B08
  and
- Check the (Current detect 2) cable line from Berg-A02 to A-A3A2D11.

021

Bad card:
A-A3M2.

022

- Probe the following:

```
Up   Light: Off
Down Light: On
```

A-A3R2M13 (- DS data terminal ready).

Are the lights correct?

Y N

P Q

F G H J P Q
4 4 4 4

023

Bad card:
A-A3R2.

024

There is an open in the board wire from A-A3R2M13 to A-A3M2B02.

025

Bad card:
A-A3M2.

026

- Check the transfer relay cable line from Berg-B05 to A-A3A2D06.

027

- Check for continuity and check for a grounded line (Current detect 1) from Berg-B01 to A-A3A2B08.
- Check for continuity and check for a grounded line (Current detect 2) from Berg-A02 to A-A3A2D11.

There is a PSN line plate problem
---or---
There is a possible telephone line problem.

028

Is a 3-second answer tone heard?

Y N

029

- Check for continuity and check for a grounded line:

  From Berg-A06 to A-A3A2B07 (DR)
  From Berg-A08 to A-A3A2B03 (DT)
  From Berg-A02 to A-A3A2D11 (C.D.2).

Bad card:
A-A3M2.

030

Is the CE panel DSR light On?

Y N

7 7
R S

031
- Probe the following:

```
Up   Light: Off
Down Light: On
```

A-A3M2B13 (-DS data set ready).
Are the lights correct?
Y N

032
Bad card:
A-A3M2.

033
Bad card:
A-A3R2.

034
Go To Map 3054, Entry Point A.

035
- Probe the following:

```
Up   Light: Off
Down Light: On
```

A-A3M2B13 (-DS data set ready).
Are the lights correct?
Y N

036
Bad card:
A-A3R2.

037
Bad card:
A-A3M2.

1200 I.M. (PSN) Line 2

5360 Systems Unit

ENTRY POINTS

FROM	ENTER THIS MAP		
MAP NUMBER	ENTRY POINT	PAGE NUMBER	STEP NUMBER
3010	A	1	001

EXIT POINTS

EXIT THIS MAP		TO	
PAGE NUMBER	STEP NUMBER	MAP NUMBER	ENTRY POINT
7	034	3054	A
2	005	3056	A

001
(Entry Point A)

- Pick up your system telephone.

MAP DESCRIPTION:
This MAP checks the World Trade Public Switched Network (PSN) 1200 integrated modem connection to the telephone network (line 2).

START CONDITIONS:
The data communications diagnostics were run.

FRUs PARTIALLY TESTED:
Card A-A3Q2 card A-A3L2 and WTC PSN line plate

Do you hear a dial tone?
Y N

002
- Use the meter to measure the DC voltage at the B05 berg connector (Transfer relay) on the PSN line plate.

Is the 'Transfer relay' line picked?
- For the berg connector location, see Figure 1 in this MAP.

Does the meter read between -2.8 V and -1.0 V?
Y N

003
The PSN line plate is bad.
There is a possible telephone line problem.

© Copyright IBM Corp. 1983

3 2
A B

004

- Use the meter to measure the DC voltage of the 'Transfer relay' line at A-A3L2G03.

Is the 'Transfer relay' line picked?

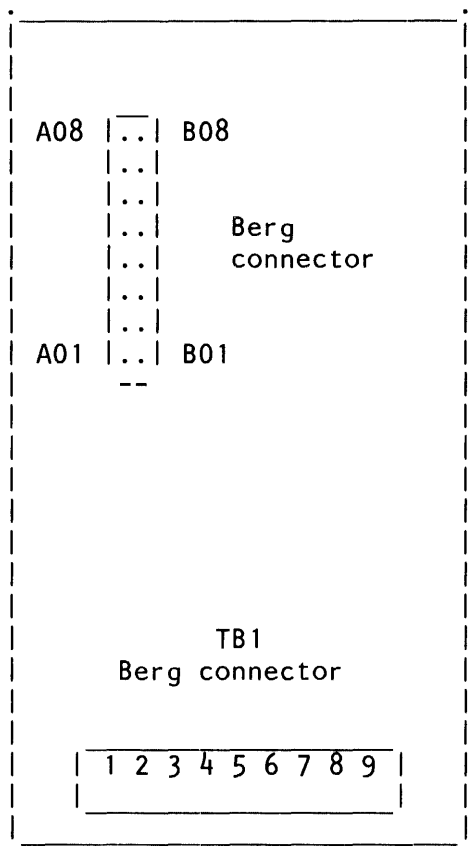

Figure 1

PSN line plate

Does the meter read between -2.8 V and -1.0 V?

Y N

005

- Check the cables for an open 'Transfer relay' line.
- To perform this check,

Go To Map 3056, Entry Point A.

006

- Select mode 1.
- Press the System Reset key.
- Use the meter to measure the DC voltage of the 'Transfer relay' line at A-A3L2G03.

Does the meter read between -2.8 V and -1.0 V?

Y N

007

- Hang up your telephone.

Go to Page 1, Step 001, Entry Point A.

008

- Probe the following:

```
Up   Light: Off
Down Light: On
```

A-A3L2B02 (-DS data terminal ready).

Are the lights correct?

Y N

009

Bad card:
A-A3L2.

010

Bad card:
A-A3Q2.

011

- Hang up your telephone.

- Press the Attn key (system console) to return to the main menu.
- Select the TU Select option.
- Select the failing data communications line.
- Enter 70 as the last two digits of the test ID.
- Select option 1 (execute test, display and stop).

Is the control panel DSR display light On?

Y N

- Enable the adapter, and activate the DTR.

012

- Dial the system telephone from nearby telephone.
- Wait for at least 3 rings then listen for a 3 second answer tone.

Does the phone stop ringing?

Y N

013

- Use the meter to measure the DC voltage at the B05 berg connector.
  (Transfer relay) on PSN line plate.

Is the transfer relay picked?

Does the meter read between -2.8 V and -1.0 V?

Y N

014

- Use the meter to measure the DC voltage of the 'Transfer relay' line at A-A3L2G03.

Does the meter read between -2.8 V and -1.0 V?

Y N

015

- Probe the following:

```
Up   Light: Off
Down Light: On
```

A-A3L2B02 (-DS data terminal ready).

Are the lights correct?

Y N

6 6 6 6 5
F G H J K

016

- Probe the following:
  A-A3L2D12 (-DS ring indicator).

- Ensure that the telephone is ringing while you are probing the ring indicator.

The lights come on when the system telephone is not ringing (between rings).

```
Up   Light: On
Down Light: Off
```

The lights come on when the system telephone is ringing (bell sounding).

```
Up   Light: Off
Down Light: On
```

Are the lights correct?

Y N

017

- Switch probe to MST 2/4, :
  A-A3L2G10, (Current detect 1)
  and
  A-A3L2G13, (Current detect 2).

- Ensure that the telephone is ringing while you are probing.

The lights come on when the system telephone is not ringing (between rings).

```
Up   Light: On
Down Light: Off
```

The lights come on when the system telephone is ringing (bell sounding).

```
Up   Light: On
Down Light: On
```

Are the lights correct for either point probed?

Y N

6 6 6
L M N

018

- Switch probe to MST 2/4, at the PSN line plate.
  Berg connector B01, (Current detect 1)
  and
  Berg connector A02, (Current detect 2).

```
Up   Light: On or flashing
Down Light: On or flashing
```

Are the lights correct for either point probed?

Y N

019

- Check for continuity from the PSN line plate to the telephone line.
  Sig 1. PSN line plate TB1-8, tel line (white) GN.
  Sig 2. PSN line plate TB1-9, tel line (red) R.

020

- Check the (Current detect 1) cable line from Berg-B01 to A-A3A3B08
  and
- Check the (Current detect 2) cable line from Berg-A02 to A-A3A3D11.

021

Bad card:
A-A3L2.

022

- Probe the following:

```
Up   Light: Off
Down Light: On
```

A-A3Q2M13 (-DS data terminal ready).

Are the lights correct?

Y N

P Q

023

Bad card:
A-A3Q2.

024

There is an open in the board wire from A-A3Q2M13 to A-A3L2B02.

025

Bad card:
A-A3L2.

026

- Check the transfer relay cable line from Berg-B05 to A-A3A3D06.

027

- Check for continuity and check for grounded line (Current detect 1) from Berg-B01 to A-A3A3B08.
- Check for continuity and check for grounded line (Current detect 2) from Berg-A02 to A-A3A3D11.

There is a PSN line plate problem
---or---
There is a possible telephone line problem.

028

Is a 3-second answer tone heard?

Y N

029

- Check for continuity and check for grounded line:

  From Berg-A06 to A-A3A3B07 (DR)
  From Berg-A08 to A-A3A3B03 (DT)
  From Berg-A02 to A-A3A3D11 (C.D.2).

Bad card:
A-A3L2.

030

Is the control panel DSR display light On?

Y N

031
- Probe the following:

```
Up   Light: Off
Down Light: On
```

A-A3L2B13 (-DS data set ready).
Are the lights correct?
Y N

032
Bad card:
A-A3L2.

033
Bad card:
A-A3Q2.

034
Go To Map 3054, Entry Point A.

035
- Probe the following:

```
Up   Light: Off
Down Light: On
```

A-A3L2B13 (-DS data set ready).
Are the lights correct?
Y N

036
Bad card:
A-A3Q2.

037
Bad card:
A-A3L2.

1200 I.M. (PSN) Line 3

5360 Systems Unit

ENTRY POINTS

FROM	ENTER THIS MAP		
MAP NUMBER	ENTRY POINT	PAGE NUMBER	STEP NUMBER
3010	A	1	001

EXIT POINTS

EXIT THIS MAP		TO	
PAGE NUMBER	STEP NUMBER	MAP NUMBER	ENTRY POINT
7	034	3054	A
2	005	3057	A

001
(Entry Point A)

- Pick up your system telephone.

MAP DESCRIPTION:
This MAP checks the World Trade Public Switched Network (PSN) 1200 integrated modem connection to the telephone network (line 3).

START CONDITIONS:
The data communications diagnostics were run.

FRUs PARTIALLY TESTED:
Card A-A3P2 card A-A3M4 and WTC PSN line plate

Is a dial tone heard?
Y N

002
- Use the meter to measure the DC voltage at the B05 berg connector (Transfer relay) on the PSN line plate.

Does the meter read between -2.8 V and -1.0 V?
Y N

003
The PSN line plate is bad.
There is a possible telephone line problem.

Is the 'Transfer relay' line picked?
- For the berg connector location, see Figure 1 in this MAP.

© Copyright IBM Corp. 1983

3 2
A B

004

- Use the meter to measure the DC voltage of the 'Transfer relay' line at A-A3M4G03.

Is the 'Transfer relay' line picked?

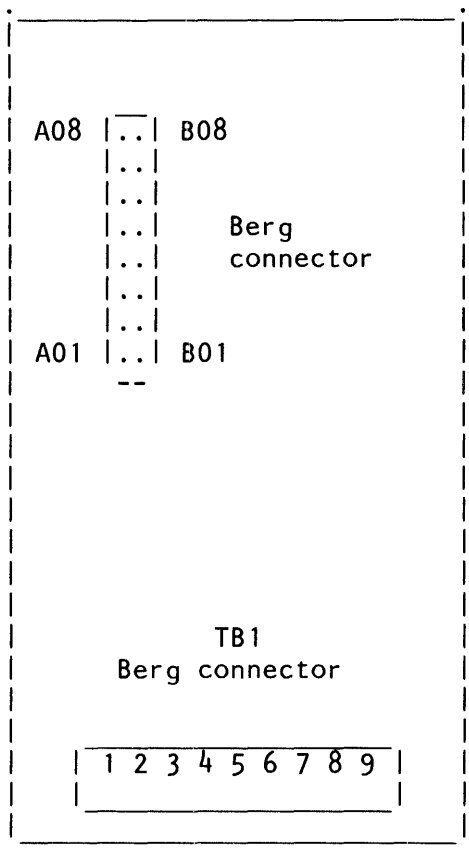

Figure 1

PSN line plate

Does the meter read between -2.8 V and -1.0 V?

Y N

005

- Check the cables for an open (Transfer relay) line.
- To perform this check,

Go To Map 3057, Entry Point A.

006

- Select mode 1.
- Press the System Reset key.
- Use the meter to measure the DC voltage of (Transfer relay) at A-A3M4G03.

Does the meter read between -2.8 V and -1.0 V?

Y N

007

- Hang up your telephone.

Go to Page 1, Step 001, Entry Point A.

008

- Probe the following:

```
Up   Light: Off
Down Light: On
```

A-A3M4B02 (-DS data terminal ready).

Are the lights correct?

Y N

009

Bad card:
A-A3M4.

010

Bad card:
A-A3P2.

011

- Hang up your telephone.
- Enable the adapter, and activate the DTR.
- Press the Attn key (system console) to return to the main menu.
- Select the TU Select option.
- Select the failing data communications line.
- Enter 70 as the last two digits of the test ID.
- Select option 1 (execute test, display and stop).

Is the control panel DSR display light On?

Y N

012

- Dial system telephone from nearby telephone.
- Wait for at least 3 rings then listen for a 3 second answer tone.

Does the phone stop ringing?

Y N

013

- Use the meter to measure the DC voltage at the B05 berg connector (Transfer relay) on PSN line plate.

Is the 'Transfer relay' line picked?

Does the meter read between -2.8 V and -1.0 V?

Y N

014

- Use the meter to measure the DC voltage of the 'Transfer relay' line at A-A3M4G03.

Does the meter read between -2.8 V and -1.0 V?

Y N

015

- Probe the following:

```
Up   Light: Off
Down Light: On
```

A-A3M4B02 (-DS data terminal ready).

Are the lights correct?

Y N

016

- Probe the following:
  A-A3M4D12 (-DS ring indicator).

- Ensure that the telephone is ringing while you are probing the ring indicator.

The lights come on when the system telephone is not ringing (between rings).

```
Up   Light: On
Down Light: Off
```

The lights come on when the system telephone is ringing (bell sounding).

```
Up   Light: Off
Down Light: On
```

Are the lights correct?

Y N

017

- Switch probe to MST 2/4, :
  A-A3M4G10, (Current detect 1)
  and
  A-A3M4G13, (Current detect 2).

- Ensure that the telephone is ringing while you are probing.

The lights come on when the system telephone is not ringing (between rings).

```
Up   Light: On
Down Light: Off
```

The lights come on when the system telephone is ringing (bell sounding).

```
Up   Light: On
Down Light: On
```

Are the lights correct for either point probed?

Y N

6 6 6
L M N

018

- Switch probe to MST 2/4, at the PSN line plate.

Berg connector B01, (Current detect 1)
and
Berg connector A02, (Current detect 2).

```
Up   Light: On or flashing
Down Light: On or flashing
```

Are the lights correct for either point probed?

Y N

019

- Check for continuity from the PSN line plate to the telephone line.

Sig 1. PSN line plate TB1-8, tel line (white) GN.
Sig 2. PSN line plate TB1-9, tel line (red) R.

020

- Check the (Current detect 1) cable line from Berg-B01 to A-A3A4B08
and
- Check the (Current detect 2) cable line from Berg-A02 to A-A3A4D11.

021

Bad card:
A-A3M4.

022

- Probe the following:

```
Up   Light: Off
Down Light: On
```

A-A3P2M13 (-DS data terminal ready).

Are the lights correct?

Y N

P Q

F G H J P Q
4 4 4 4

023

Bad card:
A-A3P2.

024

There is an open in the board wire from A-A3P2M13 to A-A3M4B02.

025

Bad card:
A-A3M4.

026

- Check the transfer relay cable line from Berg-B05 to A-A3A4D06.

027

- Check for continuity and check for grounded line (Current detect 1) from Berg-B01 to A-A3A4B08.
- Check for continuity and check for grounded line (Current detect 2) from Berg-A02 to A-A3A4D11.
- There is a PSN line plate problem

---or---

There is a possible telephone line problem.

028

Is a 3-second answer tone heard?

Y N

029

- Check for continuity and check for grounded line:

From Berg-A06 to A-A3A4B07 (DR)
From Berg-A08 to A-A3A4B03 (DT)
From Berg-A02 to A-A3A4D11 (C.D.2).

Bad card:
A-A3M4.

030

Is the control panel DSR display light On?

Y N

031
- Probe the following:

```
Up   Light: Off
Down Light: On
```

A-A3M4B13, (-DS data set ready).
Are the lights correct?
Y N

032
Bad card:
A-A3M4.

033
Bad card:
A-A3P2.

034
Go To Map 3054, Entry Point A.

035
- Probe the following:

```
Up   Light: Off
Down Light: On
```

A-A3M4B13 (-DS data set ready).
Are the lights correct?
Y N

036
Bad card:
A-A3P2.

037
Bad card:
A-A3M4.

ENTRY POINTS

FROM	ENTER THIS MAP		
MAP NUMBER	ENTRY POINT	PAGE NUMBER	STEP NUMBER
3010	A	1	001

EXIT POINTS

EXIT THIS MAP		TO	
PAGE NUMBER	STEP NUMBER	MAP NUMBER	ENTRY POINT
7	034	3054	A
2	005	3058	A

001
(Entry Point A)

- Pick up your system telephone.

MAP DESCRIPTION:
This MAP checks the World Trade Public Switched Network (PSN) 1200 integrated modem connection to the telephone network (line 4).

START CONDITIONS:
The data communications diagnostics were run.

FRUs PARTIALLY TESTED:
Card A-A3L4 card A-A3N2 and WTC PSN line plate

Do you hear a dial tone?
Y N

002
- Use the meter to measure the DC voltage at the B05 berg connector (Transfer relay) on the PSN line plate.

Is the 'Transfer relay' line picked?
- For the berg connector location, see Figure 1 in this MAP.

Does the meter read between -2.8 V and -1.0 V?
Y N

003
The PSN line plate is bad.
There is a possible telephone line problem.

© Copyright IBM Corp. 1983

3 2
A B

004

- Use the meter to measure the DC voltage of the 'Transfer relay' line at A-A3L4G03.

Is the 'Transfer relay' line picked?

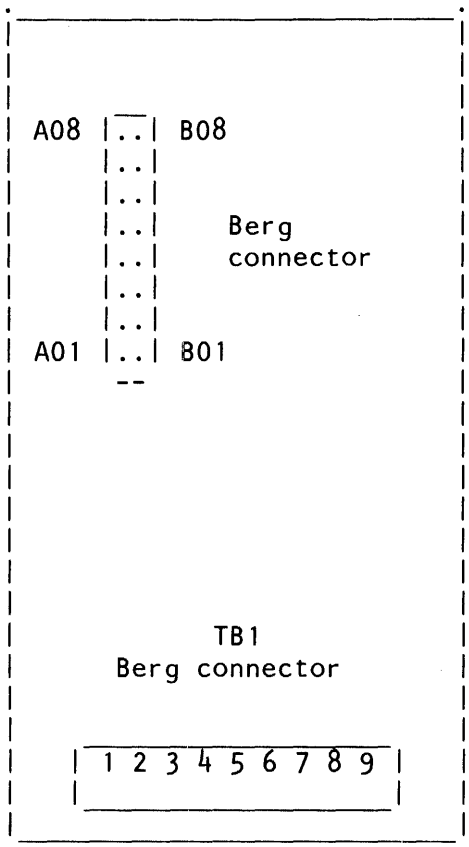

Figure 1

PSN line plate

Does the meter read between -2.8 V and -1.0 V?

Y N

005

- Check the cables for an open (Transfer relay) line.
- To perform this check,

Go To Map 3058, Entry Point A.

006

- Select mode 1.
- Press the System Reset key.
- Use the meter to measure the DC voltage of the 'Transfer relay' line at A-A3L4G03.

Does the meter read between -2.8 V and -1.0 V?

Y N

007

- Hang up your telephone.

Go to Page 1, Step 001, Entry Point A.

008

- Probe:

```
Up   Light: Off
Down Light: On
```

A-A3L4B02 (-DS data terminal ready).

Are the lights correct?

Y N

009

Bad card:
A-A3L4.

010

Bad card:
A-A3N2.

011

- Hang up your telephone.

- Press the Attn key (system console) to return to the main menu.
- Select the TU Select option.
- Select the failing data communications line.
- Enter 70 as the last two digits of the test ID.
- Select option 1 (execute test, display and stop).

Is the control panel DSR display light On?

Y N

- Enable the adapter, and activate the DTR.

012

- Dial system telephone from nearby telephone.
- Wait for at least 3 rings then listen for a 3 second answer tone.

Does the phone stop ringing?

Y N

013

- Use the meter to measure the DC voltage at the B05 Berg connector (Transfer relay) on PSN line plate.

Is the 'Transfer relay' line picked?

Does the meter read between -2.8 V and -1.0 V?

Y N

014

- Use the meter to measure the DC voltage of the 'Transfer relay' line at A-A3L4G03.

Does the meter read between -2.8 V and -1.0 V?

Y N

015

- Probe the following:

```
Up   Light: Off
Down Light: On
```

A-A3L4B02 (-DS data terminal ready).

Are the lights correct?

Y N

016

- Probe the following:
  A-A3L4D12 (-DS ring indicator).

- Ensure that the telephone is ringing while you are probing the ring indicator.

The lights come on when the system telephone is not ringing (between rings).

```
Up   Light: On
Down Light: Off
```

The lights come on when the system telephone is ringing (bell sounding).

```
Up   Light: Off
Down Light: On
```

Are the lights correct?

Y N

017

- Switch probe to MST 2/4, :
  A-A3L4G10, (Current detect 1)
  and
  A-A3L4G13, (Current detect 2).

- Ensure that the telephone is ringing while you are probing.

The lights come on when the system telephone is not ringing (between rings).

```
Up   Light: On
Down Light: Off
```

The lights come on when the system telephone is ringing (bell sounding).

```
Up   Light: On
Down Light: On
```

Are the lights correct for either point probed?

Y N

6 6 6
L M N

018

- Switch probe to MST 2/4, at the PSN line plate.
  Berg connector B01, (Current detect 1)
  and
  Berg connector A02, (Current detect 2).

```
Up   Light: On or flashing
Down Light: On or flashing
```

Are the lights correct for either point probed?

Y N

019

- Check for continuity from the PSN line plate to the telephone line.
  Sig 1. PSN line plate TB1-8, tel line (white) GN.
  Sig 2. PSN line plate TB1-9, tel line (red) R.

020

- Check the (Current detect 1) cable line from Berg-B01 to A-A3A5B08
  and
  Check the (Current detect 2) cable line from Berg-A02 to A-A3A5D11.

021

Bad card:
A-A3L4.

022

- Probe the following:

```
Up   Light: Off
Down Light: On
```

A-A3N2M13 (-DS data terminal ready).

Are the lights correct?

Y N

P Q

F G H J P Q
4 4 4 4

023

Bad card:
A-A3N2.

024

There is an open in the board wire from A-A3N2M13 to A-A3L4B02.

025

Bad card:
A-A3L4.

026

- Check the transfer relay cable line from Berg-B05 to A-A3A5D06.

027

- Check for continuity and check for grounded line (Current detect 1) from Berg-B01 to A-A3A5B08.
- Check for continuity and check for grounded line (Current detect 2) from Berg-A02 to A-A3A5D11.

There is a PSN line plate problem
---or---
There is a possible telephone line problem.

028

Is a 3-second answer tone heard?

Y N

029

- Check for continuity and check for grounded line:

  From Berg-A06 to A-A3A5B07 (DR)
  From Berg-A08 to A-A3A5B03 (DT)
  From Berg-A02 to A-A3A5D11 (C.D.2).

Bad card:
A-A3L4.

030

Is the control panel DSR display light On?

Y N

7 7
R S

031

- Probe the following:

```
Up    Light: Off
Down  Light: On
```

A-A3L4B13 (-DS data set ready).

Are the lights correct?

Y N

032

Bad card:
A-A3L4.

033

Bad card:
A-A3N2.

034

Go To Map 3054, Entry Point A.

035

- Probe the following:

```
Up    Light: Off
Down  Light: On
```

A-A3L4B13 (-DS data set ready).

Are the lights correct?

Y N

036

Bad card:
A-A3N2.

037

Bad card:
A-A3L4.

1200 IM Answer Tone MLCA Line 1

5360 Systems Unit

ENTRY POINTS

FROM	ENTER THIS MAP		
MAP NUMBER	ENTRY POINT	PAGE NUMBER	STEP NUMBER
3050	A	1	001

001
(Entry Point A)

Note: - For aid in continuity checking and isolation of the cable problem, see MAP 3055.
- Press the Line Select key (control panel).
- Using the input keys, select the number '1'
(Note: The above is not needed for SLCA. The default is to display the lights.).

Is the DSR display light on?
Y N

002
- Probe the following:

```
Up   Light: On
Down Light: Off
```

A-A3M2J09 (+Coupler cut through (CCT)).
Are the lights correct?
Y N

003
- Measure the voltage on line CCT at the CBS coupler (use SG (signal ground) as a reference).

Is the line equal to or between +3 V and +15 V?
Y N

2A 2B 2C 2D

MAP DESCRIPTION:
This MAP determines why no answer tone is supplied to incoming calls.

START CONDITIONS:
You have entered this MAP from MAP 3050 and found an error condition.

FRUs PARTIALLY TESTED:
Card A-A3M2

© Copyright IBM Corp. 1983

004

- Probe the following:

```
Up   Light: On
Down Light: Off
```

A-A3M2J02 (+Data modem ready).

Are the lights correct?

Y N

005

While the power is Off and the terminal is removed from the coupler:

- Check for an open or a short circuit in the cable from the CBS coupler SG to A-A3A2D08 (signal ground).

Bad card:
A-A3M2.

006

- Measure the voltage on line DA at the CBS coupler (use SG as a reference).

Is the line equal to or between +3 V and +15 V?

Y N

007

- While the power is Off and the terminal is removed from the coupler, check for an open or short circuit in the cable from the CBS coupler DA to A-A3A2D04 (+Data modem ready).

008

Bad card:
A-A3M2.
There is a CBS coupler problem.

009

- Measure the voltage on the '+Coupler cut through' line again at the A-A3M2J09 modem pin (use A-A3M2J08 (ground) as a reference).

Is the voltage still equal to or between +3 V and +15 V and approximately equal to earlier measurement?

Y N

010

- While the power is Off and the terminal is removed from the coupler, check for an open or a short circuit in the cable from the CBS coupler CCT to A-A3A2D02 (+Coupler cut through).

011

Bad card:
A-A3M2.

012

Bad card:
A-A3M2.

013

While the power is Off and the terminal is removed from the coupler:

- Check for an open or short circuit in the cable from the CBS coupler DT to A-A3A2B03 (Data tip).
- Check for an open or short circuit in the cable from the CBS coupler DR to A-A3A2B07 (Data ring).

Bad card:
A-A3M2.

1200 IM Answer Tone Line 2

5360 Systems Unit

ENTRY POINTS

FROM	ENTER THIS MAP		
MAP NUMBER	ENTRY POINT	PAGE NUMBER	STEP NUMBER
3051	A	1	001

001
(Entry Point A)

Note: - For aid in continuity checking and isolation of the cable problem, see MAP 3056.
- Press the Line Select key (control panel).
- Using the input keys, select the number '2'.

Is the DSR display light on?
Y N

002
- Probe the following:

```
Up   Light: On
Down Light: Off
```

A-A3L2J09 (+Coupler cut through (CCT)).
Are the lights correct?
Y N

003
- Measure the voltage on line CCT at the CBS coupler (use SG (signal ground) as a reference).

Is the line equal to or between +3 V and +15 V?
Y N

2A 2B 2C 2D

MAP DESCRIPTION:
This MAP determines why no answer tone is supplied to incoming calls.

START CONDITIONS:
You have entered this MAP from MAP 3051 and found an error condition.

FRUs PARTIALLY TESTED:
Card A-A3L2

© Copyright IBM Corp. 1983

004

- Probe the following:

```
Up   Light: On
Down Light: Off
```

A-A3L2J02 (+Data modem ready).

Are the lights correct?

Y N

005

- While the power is Off and the terminal is removed from the coupler:
  - Check for an open or a short circuit in the cable from the CBS coupler SG to A-A3A3D08 (signal ground).

Bad card:
A-A3L2.

006

- Measure the voltage on line DA at the CBS coupler (use SG as a reference).

Is the line equal to or between +3 V and +15 V?

Y N

007

- While the power is Off and the terminal is removed from the coupler, check for an open or short circuit in the cable from the CBS coupler DA to A-A3A3D04 (+Data modem ready).

008

Bad card:
A-A3L2.
There is a CBS coupler problem.

009

- Measure the voltage on the '+Coupler cut through' line again at the A-A3L2J09 modem pin (use A-A3L2J08 (ground) as a reference).

Is the voltage still equal to or between +3 V and +15 V and approximately equal to earlier measurement?

Y N

010

- While the power is Off and the terminal is removed from the coupler, check for an open or a short circuit in the cable from the CBS coupler CCT to A-A3A3D02 (+Coupler cut through).

011

Bad card:
A-A3L2.

012

Bad card:
A-A3L2.

013

While the power is Off and the terminal is removed from the coupler:

- Check for an open or short circuit in the cable from the CBS coupler DT to A-A3A3B03 (Data tip).
- Check for an open or short circuit in the cable from the CBS coupler DR to A-A3A3B07 (Data ring).

Bad card:
A-A3L2.

1200 IM Answer Tone Line 3

5360 Systems Unit

ENTRY POINTS

FROM	ENTER THIS MAP		
MAP NUMBER	ENTRY POINT	PAGE NUMBER	STEP NUMBER
3052	A	1	001

001
(Entry Point A)

Note: - For aid in continuity checking and isolation of the cable problem, see MAP 3057.
- Press the Line Select key (control panel).
- Using the input keys, select the number '3'.

Is the DSR display light on?
Y N

002
- Probe the following:

```
Up   Light: On
Down Light: Off
```

A-A3M4J09 (+Coupler cut through (CCT)).
Are the lights correct?
Y N

003
- Measure the voltage on line CCT at the CBS coupler (use SG (signal ground) as a reference).

Is the line equal to or between +3 V and +15 V?
Y N

2A 2B 2C 2D

MAP DESCRIPTION:
This MAP determines why no answer tone is supplied to incoming calls.

START CONDITIONS:
You have entered this MAP from MAP 3052 and found an error condition.

FRUs PARTIALLY TESTED:
Card A-A3M4

© Copyright IBM Corp. 1983

004

- Probe the following:

```
Up   Light: On
Down Light: Off
```

A-A3M4J02 (+Data modem ready).

Are the lights correct?

Y N

005

While the power is Off and the terminal is removed from the coupler:

- Check for an open or a short circuit in the cable from the CBS coupler SG to A-A3A4D08 (signal ground).

Bad card:
A-A3M4.

006

- Measure the voltage on line DA at the CBS coupler (use SG as a reference).

Is the line equal to or between +3 V and +15 V?

Y N

007

- While the power is Off and the terminal is removed from the coupler, check for an open or short circuit in the cable from the CBS coupler DA to A-A3A4D04 (+Data modem ready).

008

Bad card:
A-A3M4.
There is a CBS coupler problem.

009

- Measure the voltage on the '+Coupler cut through' line again at the A-A3M4J09 modem pin (use A-A3M4J08 (ground) as a reference).

Is the voltage still equal to or between +3 V and +15 V and approximately equal to earlier measurement?

Y N

010

- While the power is Off and the terminal is removed from the coupler, check for an open or a short circuit in the cable from the CBS coupler CCT to A-A3A4D02 (+Coupler cut through).

011

Bad card:
A-A3M4.

012

Bad card:
A-A3M4.

013

While the power is Off and the terminal is removed from the coupler:

- Check for an open or short circuit in the cable from the CBS coupler DT to A-A3A4B03 (Data tip).
- Check for an open or short circuit in the cable from the CBS coupler DR to A-A3A4B07 (Data ring).

Bad card:
A-A3M4.

1200 IM Answer Tone Line 4

5360 Systems Unit

ENTRY POINTS

FROM	ENTER THIS MAP		
MAP NUMBER	ENTRY POINT	PAGE NUMBER	STEP NUMBER
3053	A	1	001

001
(Entry Point A)

Note: - For aid in continuity checking and isolation of the cable problem, see MAP 3058.
- Press the Line Select key (control panel).
- Using the input keys, select the number '4'.

Is the DSR display light on?
Y N

002
- Probe the following:

```
Up   Light: On
Down Light: Off
```

A-A3L4J09 (+Coupler cut through (CCT)).
Are the lights correct?
Y N

003
- Measure the voltage on line CCT at the CBS coupler (use SG (signal ground) as a reference).

Is the line equal to or between +3 V and +15 V?
Y N

2A 2B 2C 2D

MAP DESCRIPTION:
This MAP determines why no answer tone is supplied to incoming calls.

START CONDITIONS:
You have entered this MAP from MAP 3053 and found an error condition.

FRUs PARTIALLY TESTED:
Card A-A3L4

© Copyright IBM Corp. 1983

004

- Probe the following:

```
Up   Light: On
Down Light: Off
```

A-A3L4J02 (+Data modem ready).

Are the lights correct?

Y N

005

While the power is Off and the terminal is removed from the coupler:

- Check for an open or a short circuit in the cable from the CBS coupler SG to A-A3A5D08 (signal ground).

Bad card:
A-A3L4.

006

- Measure the voltage on line DA at the CBS coupler (use SG as a reference).

Is the line equal to or between +3 V and +15 V?

Y N

007

- While the power is Off and the terminal is removed from the coupler, check for an open or short circuit in the cable from the CBS coupler DA to A-A3A5D04 (+Data modem ready).

008

Bad card:
A-A3L4.
There is a CBS coupler problem.

009

- Measure the voltage on the '+Coupler cut through' line again at the A-A3L4J09 modem pin (use A-A3L4J08 (ground) as a reference).

Is the voltage still equal to or between +3 V and +15 V and approximately equal to earlier measurement?

Y N

010

- While the power is Off and the terminal is removed from the coupler, check for an open or a short circuit in the cable from the CBS coupler CCT to A-A3A5D02 (+Coupler cut through).

011

Bad card:
A-A3L4.

012

Bad card:
A-A3L4.

013

While the power is Off and the terminal is removed from the coupler:

- Check for an open or short circuit in the cable from the CBS coupler DT to A-A3A5B03 (Data tip).
- Check for an open or short circuit in the cable from the CBS coupler DR to A-A3A5B07 (Data ring).

Bad card:
A-A3L4.

1200 IM No Answer MLCA Line 1

5360 Systems Unit

ENTRY POINTS

FROM	ENTER THIS MAP		
MAP NUMBER	ENTRY POINT	PAGE NUMBER	STEP NUMBER
3050	A	1	001

001
(Entry Point A)

MAP DESCRIPTION:
This MAP determines why the system does no answer incoming calls.

START CONDITIONS:
You have entered this MAP from MAP 3050 and foun an error condition.

FRUs PARTIALLY TESTED:
A-A3R2, A-A3M2

Is the control panel DSR display light On?
Y N

002
- Probe the following:

```
Up   Light: Off
Down Light: On
```

A-A3R2M13 (-DS data terminal ready)
Are the lights correct?
Y N

003
Bad card:
A-A3R2.

© Copyright IBM Corp. 1983

2 A 2 B

No Answer

5360 Systems Unit

004
Bad card:
A-A3M2.

While the power is Off and the terminals are removed:
- Check for an open or a short circuit in the cable from the CBS coupler OH to A-A3A2D06 (Off hook).
- Check for an open or a short circuit in the cable from the CBS coupler RI to A-A3A2D11 (Ring indicate).

005
- Probe the following:

```
Up    Light: On
Down  Light: Off
```

A-A3M2G03 (+Off hook).
Are the lights correct?
Y N

006
- Probe the following:

```
Up    Light: On
Down  Light: On
```

A-A3M2G13 (+Ring indicate).
Are the lights correct?
Y N

007
- Measure the voltage on the RI (+Ring indicate) line at the CBS coupler (use SG (Signal ground) as a reference).

Does the line voltage change when the telephone rings?
Y N

008
There is a CBS coupler problem.

009
- Check for an open or a short circuit in the cables from the CBS coupler RI to A-A3A2D11 (+Ring indicator).

010
Bad card:
A-A3M2.

011
- Measure the voltage on the OH (+Off hook) line at the CBS coupler (use SG (signal ground) as a reference).

Is the line equal to or between +3 V and +15 V?
Y N

012
- Check for an open or a short circuit in the cables from the CBS coupler OH to A-A3A2D06 (+Off hook).

013
There is a CBS coupler problem.

15Feb84 PN 2596053
EC 826487 PEC 826380

1200 IM No Answer Line 2

5360 Systems Unit

ENTRY POINTS

FROM	ENTER THIS MAP		
MAP NUMBER	ENTRY POINT	PAGE NUMBER	STEP NUMBER
3051	A	1	001

001
(Entry Point A)

MAP DESCRIPTION:
This MAP determines why the system does n answer incoming calls.

START CONDITIONS:
You have entered this MAP from MAP 3051 and four an error condition.

FRUs PARTIALLY TESTED:
Card A-A3Q2, card A-A3L2

Is the control panel DSR display light On?
Y N

002
- Probe the following:

```
Up   Light: Off
Down Light: On
```

A-A3Q2M13 (-DS data terminal ready).
Are the lights correct?
Y N

003
Bad card:
A-A3Q2.

2 2
A B

© Copyright IBM Corp. 1983

No Answer

5360 Systems Unit

004
Bad card:
A-A3L2.

While the power if Off and the terminals are removed:
- Check for an open or a short circuit in the cable from the CBS coupler OH to A-A3A3D06 (Off hook).
- Check for an open or a short circuit in the cable from the CBS coupler RI to A-A3A3D11 (Ring indicate).

005
- Probe the following:

```
Up    Light: On
Down  Light: Off
```

A-A3L2G03 (+Off hook).
Are the lights correct?
Y N

006
- Probe the following:

```
Up    Light: On
Down  Light: On
```

A-A3L2G13 (+Ring indicate).
Are the lights correct?
Y N

007
- Measure the voltage on the RI (+Ring indicate) line at the CBS coupler (use SG (signal ground) as a reference).

Does the line voltage change when the telephone rings?
Y N

008
There is a CBS coupler problem.

009
- Check for an open or a short circuit in the cables from the CBS coupler RI to A-A3A3D11 (+Ring indicator).

010
Bad card:
A-A3L2.

011
- Measure the voltage on the OH (+Off hook) line at the CBS coupler (use SG (signal ground) as a reference).

Is the line equal to or between +3 V and +15 V?
Y N

012
- Check for an open or a short circuit in the cables from the CBS coupler OH to A-A3A3D06 (+Off hook).

013
There is a CBS coupler problem.

1200 IM No Answer Line 3

5360 Systems Unit

ENTRY POINTS

FROM	ENTER THIS MAP		
MAP NUMBER	ENTRY POINT	PAGE NUMBER	STEP NUMBER
3052	A	1	001

001
(Entry Point A)

MAP DESCRIPTION:
This MAP determines why the system does no answer incoming calls.

START CONDITIONS:
You have entered this MAP from MAP 3052 and foun an error condition.

FRUs PARTIALLY TESTED:
Card A-A3P2, card A-A3M4

Is the control panel DSR display light On?
Y N

002
- Probe the following:

```
Up   Light: Off
Down Light: On
```

A-A3P2M13 (-DS data terminal ready).

Are the lights correct?
Y N

003
Bad card:
A-A3P2.

2 A
2 B

© Copyright IBM Corp. 1983

No Answer

5360 Systems Unit

004
Bad card:
A-A3M4.

While the power is Off and the terminals are removed:
- Check for an open or a short circuit in the cable from the CBS coupler OH to A-A3A4D06 (Off hook).
- Check for an open or a short circuit in the cable from the CBS coupler RI to A-A3A4D11 (Ring indicate).

005
- Probe the following:

```
Up   Light: On
Down Light: Off
```

A-A3M4G03 (+Off hook).
Are the lights correct?
Y N

006
- Probe the following:

```
Up   Light: On
Down Light: On
```

A-A3M4G13 (+Ring indicate).
Are the lights correct?
Y N

007
- Measure the voltage on the RI (+Ring indicate) line at the CBS coupler (use SG (signal ground) as a reference).

Does the line voltage change when the telephone rings?
Y N

008
There is a CBS coupler problem.

009
- Check for an open or a short circuit in the cables from the CBS coupler RI to A-A3A4D11 (+Ring indicator).

010
Bad card:
A-A3M4.

011
- Measure the voltage on the OH (+Off hook) line at the CBS coupler (use SG (signal ground) as a reference).

Is the line equal to or between +3 V and +15 V?
Y N

012
- Check for an open or a short circuit in the cables from the CBS coupler OH to A-A3A4D06 (+Off hook).

013
There is a CBS coupler problem.

1200 IM No Answer Line 4

5360 Systems Unit

ENTRY POINTS

FROM	ENTER THIS MAP		
MAP NUMBER	ENTRY POINT	PAGE NUMBER	STEP NUMBER
3053	A	1	001

001
(Entry Point A)

MAP DESCRIPTION:
This MAP determines why the system does not answer incoming calls.

START CONDITIONS:
You have entered this MAP from MAP 3053 and found an error condition.

FRUs PARTIALLY TESTED:
Card A-A3N2, card A-A3L4

Is the control panel DSR light On?
Y N

002
- Probe the following:

```
Up   Light: Off
Down Light: On
```

A-A3N2M13 (-DS data terminal ready).

Are the lights correct?
Y N

003
Bad card:
A-A3N2.

2 A
2 B

© Copyright IBM Corp. 1983

No Answer

5360 Systems Unit

004
Bad card:
A-A3L4.

While the power if Off and the terminals are removed:
- Check for an open or a short circuit in the cable from the CBS coupler OH to A-A3A5D06 (Off hook).
- Check for an open or a short circuit in the cable from the CBS coupler RI to A-A3A5D11 (Ring indicate).

005
- Probe the following:

```
Up    Light: On
Down  Light: Off
```

A-A3L4G03 (+Off hook).
Are the lights correct?
Y N

006
- Probe the following:

```
Up    Light: On
Down  Light: On
```

A-A3L4G13 (+Ring indicate).
Are the lights correct?
Y N

007
- Measure the voltage on the RI (+Ring indicate) line at the CBS coupler (use SG (signal ground) as a reference).

Does the line voltage change when the telephone rings?
Y N

008
There is a CBS coupler problem.

C D E

009
- Check for an open or a short circuit in the cables from the CBS coupler RI to A-A3A5D11 (+Ring indicator).

010
Bad card:
A-A3L4.

011
- Measure the voltage on the OH (+Off hook) line at the CBS coupler (use SG (signal ground) as a reference).

Is the line equal to or between +3 V and +15 V?
Y N

012
- Check for an open or a short circuit in the cables from the CBS coupler OH to A-A3A5D06 (+Off hook).

013
There is a CBS coupler problem.

ENTRY POINTS

FROM MAP NUMBER	ENTER THIS MAP: ENTRY POINT	PAGE NUMBER	STEP NUMBER
3010	A	1	001

001
(Entry Point A)

- CHART DESCRIPTION -
Chart A - Data communications adapter card to X.21 adapter card.
Chart B - X.21 adapter card to the end of the external cable.
CHART C - X.21 DCE cable wrap.
Chart D - X.21 cable tower wrap.

Chart E - Diagnostic wrap card P/N 4233787 end 'B'.

MAP DESCRIPTION:
The following charts show the X.21 adapter board and cable wiring. Use these charts for continuity checking and as a free-lance tool in trouble shooting trace signals and data flow for the X.21 adapter SLCA.

START CONDITIONS:
The system powered is off.

LOGIC CARDS TESTED:
None

*** CONTINUITY CHECK TABLE ***

- Check for an open or a short circuit as shown in the following charts. Also check for grounded lines.
- If an open or short circuit is detected, use the charts to isolate to the failing FRU.

© Copyright IBM Corp. 1983

Chart A

		Board V	Board V
Sect	Line name	A C D A A R P D T E R	X C 2 A 1 R D
		A-A1 K2	A-A1 G2
1	-DS terminal ready	M13	B02
2	-DS data set ready *	S10	B13
3	-DS request to send	P06	D02
4	-DS ring indicate	S07	D12
5	-DS transmit data space	P13	D04

6	-DS clear to send	S09	D13
7	+Rate select	P10	B04
8	Transmit clock	S08	B07
9	-Test Ctrl	M10	B05
10	-DS receive data space	U10	B10
11	-DS select standby	M05	B03
12	Receive clock	S05	B08
13	-DS new sync	M04	B09
14	-DS carrier detect	S13	B12

* Data Set Ready and Test Indicate are wired together in the internal cable assembly, so there also should be continuity from A-A1K2 S10 (- DSR) to A-A1A4 D03 (- DSR) to A-A1A4 B06 (- TI) to A-A1K2 P11 (- TI).

Chart B

Sect	Line name	Board: X21 CARD	Board: CABLE CONNECTOR	Internal Cable: CABLE CONNECTOR	Internal Cable: Green Triangle 1	External Cable: CABLE CONNECTOR	External Cable: Green Triangle 1	15 PIN CONN
		V	V V	V	V	V	V	V
			*	* *		* * *		
		A-A1 G2	A-A1 A4					
1	A xmit	G02	B10	19		19		2
2	B xmit	J05	B09	21		21		9
3	A ind	J10	D05	3		3		5
4	B ind	G04	D12	5		5		12
5	A control	G05	B05	2		2		3

6	B control	J06	B02	4	4	10		
7	A receive	G09	B13	12	12	4		
8	B receive	J13	B12	25	25	11		
9	A sig timing	J04	D07	6	6	6		
10	B sig timing	G13	D11	8	8	13		
11	A diag clock	G07	D10	20	20	X	<-	see note
12	B diag clock	G08	D13	14	14	X	<-	
13	Signal ground	D08	D08	7	7	8		

* I/O board cable socket
** Cable tower connector internal cable side
*** Cable tower connector external cable side
Note: A/B diag clock lines are wired to the cable tower but not through the external cable.

Chart C

X.21 DCE cable wrap

Note: The following lines are jumpered together when the X.21 wrap function is activated at the local DCE.

DTE	15 pin connector from	to	DTE
A transmit	2	4	A receive
B transmit	9	11	B receive
A control	3	5	A indicate
B control	10	12	B indicate
*Note	X	X	A sig element timing
*Note	X	X	B sig element timing

Note: This pair of signals is passed directly to the system from the DCE to provide clocking during the wrap function.

Chart D

X.21 cable tower wrap

Note: The following lines are jumpered together when the X.21 wrap plug is used at the cable tower.

DTE	25-pin connector from	to	DTE
A transmit	19	12	A receive
B transmit	21	25	B receive
A control	2	3	A indicate
B control	4	5	B indicate
A diag clock	20	6	A sig element timing
B diag clock	14	8	B sig element timing

Chart E

Wrap card p/n 4233787 (raw card p/n 4233786) end 'B'.
End 'B' of the wrap card is used at the board socket in place of the X.21 card when a board wrap is performed.

- If the wrap card is suspect, use this chart to check out end 'B'.

End 'B'

From	To
B02	B13
B03	D12
B04	B08
B05	B07
B09	B12
D02	D13
D04	B10

ENTRY POINTS

FROM MAP NUMBER	ENTER THIS MAP: ENTRY POINT	PAGE NUMBER	STEP NUMBER
3010	A	1	001

001
(Entry Point A)

- CHART DESCRIPTION -
Chart A - Data communications adapter card to X.21 adapter card.
Chart B - X.21 adapter card to the end of the external cable.
CHART C - X.21 DCE cable wrap.
Chart D - X.21 cable tower wrap.

Chart E - Diagnostic wrap card P/N 4233787 end 'B'.

MAP DESCRIPTION:
The following charts show the X.21 adapter board and cable wiring. Use these charts for continuity checking and as a free-lance tool in trouble shooting trace signals and data flow for the X.21 adapter 1.

START CONDITIONS:
The system powered is off.

LOGIC CARDS TESTED:
None

*** CONTINUITY CHECK TABLE ***

- Check for an open or a short circuit as shown in the following charts. Also check for grounded lines.
- If an open or short circuit is detected, use the charts to isolate to the failing FRU.

© Copyright IBM Corp. 1983

Chart A

		Board V	Board V
Sect	Line name	A C D A A R P D T E R	X C 2 A 1 R D
		A-A3 R2	A-A3 M2
1	-DS terminal ready	M13	B02
2	-DS data set ready *	S10	B13
3	-DS request to send	P06	D02
4	-DS ring indicate	S07	D12
5	-DS transmit data space	P13	D04

6	-DS clear to send	S09	D13
7	+Rate select	P10	B04
8	Transmit clock	S08	B07
9	-Test Ctrl	M10	B05
10	-DS receive data space	U10	B10
11	-DS select standby	M05	B03
12	Receive clock	S05	B08
13	-DS new sync	M04	B09
14	-DS carrier detect	S13	B12

* Data Set Ready and Test Indicate are wired together in the internal cable assembly, so there also should be continuity from A-A3R2 S10 (- DSR) to A-A3A2 D03 (- DSR) to A-A3A2 B06 (- TI) to A-A3R2 P11 (- TI).

Chart B

		Board	Internal Cable			External Cable		
		V	V	V	V	V	V	V
Sect	Line name	X 2 1	C A B L E	C C A O N N E C T O R	C T C A O W B L E R	C T C A O W B L E R	15 PIN CONN	
		D						
		A-A3 M2	A-A3 A2		Green Triangle 1	Green Triangle 1		
1	A xmit	G02	B10		19	19	2	
2	B xmit	J05	B09		21	21	9	
3	A ind	J10	D05		3	3	5	
4	B ind	G04	D12		5	5	12	
5	A control	G05	B05		2	2	3	

6	B control	J06	B02	4	4	10	
7	A receive	G09	B13	12	12	4	
8	B receive	J13	B12	25	25	11	
9	A sig timing	J04	D07	6	6	6	
10	B sig timing	G13	D11	8	8	13	
11	A diag clock	G07	D10	20	20	X	<- see note
12	B diag clock	G08	D13	14	14	X	<-
13	Signal ground	D08	D08	7	7	8	

* I/O board cable socket
** Cable tower connector internal cable side
*** Cable tower connector external cable side
Note: A/B diag clock lines are wired to the cable tower but not through the external cable.

Chart C

X.21 DCE cable wrap

Note: The following lines are jumpered together when the X.21 wrap function is activated at the local DCE.

DTE	15 pin connector from	to	DTE
A transmit	2	4	A receive
B transmit	9	11	B receive
A control	3	5	A indicate
B control	10	12	B indicate
*Note	X	X	A sig element timing
*Note	X	X	B sig element timing

Note: This pair of signals is passed directly to the system from the DCE to provide clocking during the wrap function.

Chart D

X.21 cable tower wrap

Note: The following lines are jumpered together when the X.21 wrap plug is used at the cable tower.

DTE	25-pin connector from	to	DTE
A transmit	19	12	A receive
B transmit	21	25	B receive
A control	2	3	A indicate
B control	4	5	B indicate
A diag clock	20	6	A sig element timing
B diag clock	14	8	B sig element timing

_____ Chart E _____

Wrap card p/n 4233787 (raw card p/n 4233786) end 'B'.
End 'B' of the wrap card is used at the board socket in place of the X.21 card when a board wrap is performed.

- If the wrap card is suspect, use this chart to check out end 'B'.

End 'B'

From	To
B02	B13
B03	D12
B04	B08
B05	B07
B09	B12
D02	D13
D04	B10

001

ENTRY POINTS

FROM MAP NUMBER	ENTER THIS MAP: ENTRY POINT	PAGE NUMBER	STEP NUMBER
3010	A	1	001

001
(Entry Point A)

- CHART DESCRIPTION -
Chart A - Data communications adapter card to X.21 adapter card.
Chart B - X.21 adapter card to the end of the external cable.
CHART C - X.21 DCE cable wrap.
Chart D - X.21 cable tower wrap.

Chart E - Diagnostic wrap card P/N 4233787 end 'B'.

MAP DESCRIPTION:
The following charts show the X.21 adapter board and cable wiring. Use these charts for continuity checking and as a free-lance tool in trouble shooting trace signals and data flow for the X.21 adapter 2.

START CONDITIONS:
The system powered is off.

LOGIC CARDS TESTED:
None

*** CONTINUITY CHECK TABLE ***

- Check for an open or a short circuit as shown in the following charts. Also check for grounded lines.
- If an open or short circuit is detected, use the charts to isolate to the failing FRU.

© Copyright IBM Corp. 1983

Chart A

		Board	
		V	V
Sect	Line name	A C D A A R P D T E R	X C 2 A 1 R D
		Q2	L2
1	-DS terminal ready	M13	B02
2	-DS data set ready *	S10	B13
3	-DS request to send	P06	D02
4	-DS ring indicate	S07	D12
5	-DS transmit data space	P13	D04

6	-DS clear to send	S09	D13
7	+Rate select	P10	B04
8	Transmit clock	S08	B07
9	-Test Ctrl	M10	B05
10	-DS receive data space	U10	B10
11	-DS select standby	M05	B03
12	Receive clock	S05	B08
13	-DS new sync	M04	B09
14	-DS carrier detect	S13	B12

* Data Set Ready and Test Indicate are wired together in the internal cable assembly, so there also should be continuity from A- S10 (- DSR) to A- D03 (- DSR) to A- B06 (- TI) to A- P11 (- TI).

Chart B

			Board	Internal Cable			External Cable		
Sect	Line name		X C 2 A 1 R D	* C A O B N L N E E C T O R		* * C T C A 0 0 B W N L E N E R	* * * C T C A 0 0 B W N L E N E R		15 PIN CONN
			L2	A3		Green Triangle	Green Triangle		
1	A xmit		G02	B10		19	19		2
2	B xmit		J05	B09		21	21		9
3	A ind		J10	D05		3	3		5
4	B ind		G04	D12		5	5		12

5	A control	G05	B05	2	2	3		
6	B control	J06	B02	4	4	10		
7	A receive	G09	B13	12	12	4		
8	B receive	J13	B12	25	25	11		
9	A sig timing	J04	D07	6	6	6		
10	B sig timing	G13	D11	8	8	13		
11	A diag clock	G07	D10	20	20	X	<-	see note
12	B diag clock	G08	D13	14	14	X	<-	
13	Signal ground	D08	D08	7	7	8		

* I/O board cable socket
** Cable tower connector internal cable side
*** Cable tower connector external cable side
Note: A/B diag clock lines are wired to the cable tower but not through the external cable.

Chart C

X.21 DCE cable wrap

Note: The following lines are jumpered together when the X.21 wrap function is activated at the local DCE.

DTE	15 pin connector from	to	DTE
A transmit	2	4	A receive
B transmit	9	11	B receive
A control	3	5	A indicate
B control	10	12	B indicate
*Note	X	X	A sig element timing
*Note	X	X	B sig element timing

Note: This pair of signals is passed directly to the system from the DCE to provide clocking during the wrap function.

Chart D

X.21 cable tower wrap

Note: The following lines are jumpered together when the X.21 wrap plug is used at the cable tower.

DTE	25-pin connector from	to	DTE
A transmit	19	12	A receive
B transmit	21	25	B receive
A control	2	3	A indicate
B control	4	5	B indicate
A diag clock	20	6	A sig element timing
B diag clock	14	8	B sig element timing

_____ Chart E _____

Wrap card p/n 4233787 (raw card p/n 4233786) end 'B'.
End 'B' of the wrap card is used at the board socket in place of the X.21 card when a board wrap is performed.

- If the wrap card is suspect, use this chart to check out end 'B'.

End 'B'

From	To
B02	B13
B03	D12
B04	B08
B05	B07
B09	B12
D02	D13
D04	B10

ENTRY POINTS

FROM MAP NUMBER	ENTER THIS MAP: ENTRY POINT	PAGE NUMBER	STEP NUMBER
3010	A	1	001

001
(Entry Point A)

- CHART DESCRIPTION -
Chart A - Data communications adapter card to X.21 adapter card.
Chart B - X.21 adapter card to the end of the external cable.
CHART C - X.21 DCE cable wrap.
Chart D - X.21 cable tower wrap.

Chart E - Diagnostic wrap card P/N 4233787 end 'B'.

MAP DESCRIPTION:
The following charts show the X.21 adapter board and cable wiring. Use these charts for continuity checking and as a free-lance tool in trouble shooting trace signals and data flow for the X.21 adapter 3.

START CONDITIONS:
The system powered is off.

LOGIC CARDS TESTED:
None

*** CONTINUITY CHECK TABLE ***

- Check for an open or a short circuit as shown in the following charts. Also check for grounded lines.
- If an open or short circuit is detected, use the charts to isolate to the failing FRU.

© Copyright IBM Corp. 1983

Chart A

Sect	Line name	Board V ACADAPTER P2	Board V CARD M4
1	-DS terminal ready	M13	B02
2	-DS data set ready *	S10	B13
3	-DS request to send	P06	D02
4	-DS ring indicate	S07	D12
5	-DS transmit data space	P13	D04

6	-DS clear to send	S09	D13
7	+Rate select	P10	B04
8	Transmit clock	S08	B07
9	-Test Ctrl	M10	B05
10	-DS receive data space	U10	B10
11	-DS select standby	M05	B03
12	Receive clock	S05	B08
13	-DS new sync	M04	B09
14	-DS carrier detect	S13	B12

* Data Set Ready and Test Indicate are wired together in the internal cable assembly, so there also should be continuity from A- S10 (- DSR) to A- D03 (- DSR) to A- B06 (- TI) to A- P11 (- TI).

Chart B

Sect	Line name	Board: V	Board: V V	Internal Cable: V	External Cable: V	External Cable: V
		X21 CARD	* CABLE CONNECTOR	* * CABLE TOWER Green Triangle	* * * CABLE TOWER Green Triangle	15 PIN CONN
		M4	A4			
1	A xmit	G02	B10	19	19	2
2	B xmit	J05	B09	21	21	9
3	A ind	J10	D05	3	3	5
4	B ind	G04	D12	5	5	12
5	A control	G05	B05	2	2	3

6	B control	J06	B02	4	4	10		
7	A receive	G09	B13	12	12	4		
8	B receive	J13	B12	25	25	11		
9	A sig timing	J04	D07	6	6	6		
10	B sig timing	G13	D11	8	8	13		
11	A diag clock	G07	D10	20	20	X	<-	
12	B diag clock	G08	D13	14	14	X	<-	see note
13	Signal ground	D08	D08	7	7	8		

* I/O board cable socket
** Cable tower connector internal cable side
*** Cable tower connector external cable side
Note: A/B diag clock lines are wired to the cable tower but not through the external cable.

Chart C

X.21 DCE cable wrap

Note: The following lines are jumpered together when the X.21 wrap function is activated at the local DCE.

DTE	15 pin connector from	to	DTE
A transmit	2	4	A receive
B transmit	9	11	B receive
A control	3	5	A indicate
B control	10	12	B indicate
*Note	X	X	A sig element timing
*Note	X	X	B sig element timing

Note: This pair of signals is passed directly to the system from the DCE to provide clocking during the wrap function.

Chart D

X.21 cable tower wrap

Note: The following lines are jumpered together when the X.21 wrap plug is used at the cable tower.

DTE	25-pin connector from	to	DTE
A transmit	19	12	A receive
B transmit	21	25	B receive
A control	2	3	A indicate
B control	4	5	B indicate
A diag clock	20	6	A sig element timing
B diag clock	14	8	B sig element timing

Chart E

Wrap card p/n 4233787 (raw card p/n 4233786) end 'B'.
End 'B' of the wrap card is used at the board socket in place of the X.21 card when a board wrap is performed.

- If the wrap card is suspect, use this chart to check out end 'B'.

End 'B'

From	To
B02	B13
B03	D12
B04	B08
B05	B07
B09	B12
D02	D13
D04	B10

ENTRY POINTS

FROM	ENTER THIS MAP		
MAP NUMBER	ENTRY POINT	PAGE NUMBER	STEP NUMBER
3010	A	1	001

001
(Entry Point A)

- CHART DESCRIPTION -

Chart A - Data communications adapter card to X.21 adapter card.

Chart B - X.21 adapter card to the end of the external cable.

CHART C - X.21 DCE cable wrap.

Chart D - X.21 cable tower wrap.

Chart E - Diagnostic wrap card P/N 4233787 end 'B'.

MAP DESCRIPTION:
The following charts show the X.21 adapter board and cable wiring. Use these charts for continuity checking and as a free-lance tool in trouble shooting trace signals and data flow for the X.21 adapter 4.

START CONDITIONS:
The system powered is off.

LOGIC CARDS TESTED:
None

*** CONTINUITY CHECK TABLE ***

- Check for an open or a short circuit as shown in the following charts. Also check for grounded lines.
- If an open or short circuit is detected, use the charts to isolate to the failing FRU.

© Copyright IBM Corp. 1983

Chart A

Sect	Line name	Board V ADAPTER N2	Board V CARD X21 L4	Board V CARD
1	-DS terminal ready	M13	B02	
2	-DS data set ready *	S10	B13	
3	-DS request to send	P06	D02	
4	-DS ring indicate	S07	D12	
5	-DS transmit data space	P13	D04	

6	-DS clear to send	S09	D13
7	+Rate select	P10	B04
8	Transmit clock	S08	B07
9	-Test Ctrl	M10	B05
10	-DS receive data space	U10	B10
11	-DS select standby	M05	B03
12	Receive clock	S05	B08
13	-DS new sync	M04	B09
14	-DS carrier detect	S13	B12

* Data Set Ready and Test Indicate are wired together in the internal cable assembly, so there also should be continuity from A- S10 (- DSR) to A- D03 (- DSR) to A- B06 (- TI) to A- P11 (- TI).

Chart B

			Board	Internal Cable			External Cable			
Sect	Line name		X C 2 A 1 R D	C C A O B N L N E E C T O R	C T C A O O B W N L E N E R		C T C A O O B W N L E N E R		15 PIN CONN	
			L4	A5	Green Triangle		Green Triangle			
1	A xmit		G02	B10	19		19		2	
2	B xmit		J05	B09	21		21		9	
3	A ind		J10	D05	3		3		5	
4	B ind		G04	D12	5		5		12	
5	A control		G05	B05	2		2		3	

6	B control	J06	B02	4	4	10		
7	A receive	G09	B13	12	12	4		
8	B receive	J13	B12	25	25	11		
9	A sig timing	J04	D07	6	6	6		
10	B sig timing	G13	D11	8	8	13		
11	A diag clock	G07	D10	20	20	X	<-	see note
12	B diag clock	G08	D13	14	14	X	<-	
13	Signal ground	D08	D08	7	7	8		

* I/O board cable socket
** Cable tower connector internal cable side
*** Cable tower connector external cable side
Note: A/B diag clock lines are wired to the cable tower but not through the external cable.

Chart C

X.21 DCE cable wrap

Note: The following lines are jumpered together when the X.21 wrap function is activated at the local DCE.

DTE	15 pin connector from	to	DTE
A transmit	2	4	A receive
B transmit	9	11	B receive
A control	3	5	A indicate
B control	10	12	B indicate
*Note	X	X	A sig element timing
*Note	X	X	B sig element timing

Note: This pair of signals is passed directly to the system from the DCE to provide clocking during the wrap function.

Chart D

X.21 cable tower wrap

Note: The following lines are jumpered together when the X.21 wrap plug is used at the cable tower.

DTE	25-pin connector from	to	DTE
A transmit	19	12	A receive
B transmit	21	25	B receive
A control	2	3	A indicate
B control	4	5	B indicate
A diag clock	20	6	A sig element timing
B diag clock	14	8	B sig element timing

_____ Chart E _____

Wrap card p/n 4233787 (raw card p/n 4233786) end 'B'.
End 'B' of the wrap card is used at the board socket in place of the X.21 card when a board wrap is performed.

- If the wrap card is suspect, use this chart to check out end 'B'.

End 'B'

From	To
B02	B13
B03	D12
B04	B08
B05	B07
B09	B12
D02	D13
D04	B10

ENTRY POINTS

FROM	ENTER THIS MAP		
MAP NUMBER	ENTRY POINT	PAGE NUMBER	STEP NUMBER
3010	A	1	001

EXIT POINTS

EXIT THIS MAP		TO	
PAGE NUMBER	STEP NUMBER	MAP NUMBER	ENTRY POINT
5	011	3008	A
5	011	3009	A

001
(Entry Point A)
- Ensure that the external cable is connected to the external X.21 network adapter.
- Perform CSIPL from disk.
- Select mode 0.
- Enter FF00.
- Press the Load key.
- Wait for SSP sign-on screen.
- Enter SDLCTEST or BSCTEST depending on the online test you want to run.

The local system may be either the primary (requester) or the secondary (responder) but always set up the responder first. The on-line test begins executing as soon as the requester system is set up. See the maintenance manual section 30-410 or 30-415.
- Execute the on-line test.

Does the test run without an error?
Y N

MAP DESCRIPTION:
This MAP attempts to establish an on-line test with a remote system.

START CONDITIONS:
A hardware failure is suspected.

FRUs PARTIALLY TESTED:
SLCA - A-A1G2
MLCA
Line 1 - A-A3M2
Line 2 - A-A3L2
Line 3 - A-A3M4
Line 4 - A-A3L4

002
Is this an X.21 switched network?
Y N

003
- Perform a manual DCE network loop test to the remote DCE.

Does the network loop test run OK?
Y N

Note: Notify the remote site before switching to the network test mode.

© Copyright IBM Corp. 1983

5A 2B 2C 2D

004
- Suspect the network

---or---

- Suspect either the local or remote DCE.

005
The leased network is OK.
- Verify that all diagnostics run without failing on the remote DCE.

Do the remote DTE diagnostics run OK?
Y N

006
Remote DCE is bad.

007
```
If SLCA   - Bad card: A-A1G2
   MLCA
If line 1 - Bad card: A-A3M2
If line 2 - Bad card: A-A3L2
If line 3 - Bad card: A-A3M4
If line 4 - Bad card: A-A3L4
```
---or---
- Suspect the local or remote DCE.

008
Is a call progress signal being displayed?
Y N

009
- Suspect a problem with the local DCE.
- Verify that the local DCE is powered up and in normal 'Operate' mode.

010

- Refer to Chart 1 for a description of the call progress signals.
- Use Chart 2 to determine what action to be taken.

Chart 1
Coding of Call Progress Signals

Code Group	Code	Description
0	00	Reserved for future use
	01	Terminal called
	02	Redirected call
	03	Connect when free
2	20	No connection
	21	Number busy
	22	Selection Signals Procedure error
	23	Selection signals transmission error
4 & 5	41	Access barred
	42	Changed number
	43	Not obtainable
	44	Out of order
	45	Controlled not ready
	46	Uncontrolled not ready
	47	Local DCE power off
	48	Invalid facility request
	49	Network fault in local loop
	51	Call information service
	52	incompatible user class of service
6	61	Network congestion
7	71	Longterm network congestion
	72	RPOA out of order
8	81	Registration/cancellation confirmed
	82	Redirection activated
	83	redirection deactivated

(Step 010 continues)

(Step 010 continued)

Chart 2

Call Progress Results	Suggested Action
Code Group 0	Permanent type problem. - Notify customer and/or the PTT.
Code Group 2	- If code 20 or 21, try again but the number of retrys should be consistant with your country's regulations. - If code 22, verify that the number you entered is correct, then try again. If result is consistant, contact the PTT.
Code Group 4 & 5	Network facility Problem. - Notify the customer and/or the PTT.
Code Group 6	- Try again. The number of retrys should be consistant with your country's regulations. - If result is consistant, contact the PTT.
Code Group 7	Permanent type network problem. - Contact the PTT.
Code Group 8	Registration/Cancellation/Redirection not supported on S/34.

011

A possible program incompatibility problem is suspected.

- Dump and analyze the ERAP data.

Error Log MAP

Go To Map 3008, Entry Point A.

```
If SLCA   - Bad card: A-A1G2
   MLCA
If line 1 - Bad card: A-A3M2
If line 2 - Bad card: A-A3L2
If line 3 - Bad card: A-A3M4
If line 4 - Bad card: A-A3L4
```

---or---

- Suspect the local or remote DCE.

Intermittent Failure Replacement List

Go To Map 3009, Entry Point A.

ENTRY POINTS

FROM	ENTER THIS MAP		
MAP NUMBER	ENTRY POINT	PAGE NUMBER	STEP NUMBER
3010	A	1	001

Entry Point A = Continuity Chart
Chart A = End of cable wrap
Chart B = Cable tower wrap
Chart C = DCE wrap
Chart D = Wrap card p/n 4233787

MAP DESCRIPTION:
This MAP is a V.35 interface chart. It shows all the interface pins of the logic cards and cables supplying the interface. The chart can be used to trace cable problems and free-lance scoping.

START CONDITIONS:
None
LOGIC CARDS TESTED:
None

****
* Entry Point A *
****

- Note the continuity test points as specified at the top of the chart. Continuity can be checked from the output of the V.35 card to the end of the external cable.

- When doing continuity checks, test for open and grounded lines.

© Copyright IBM Corp. 1983

*** Continuity Check Table ***

	Board wires		Continuity test points: board wires		Continuity test points: Int cable	Continuity test points: ext cable
Line name	A C D A A R P D T E R A-A3 N2	V C 3 A 5 R D A-A3 L4	V C 3 A 5 R D A-A3 L4	* C S A O B C L K E E T A-A3 A5	** C T C A O O B W N L E N E R E C T O R Green Trian gle 4	*** E E C N X A D T B E L O R E F N A L
Data term ready (DTR)	M13	D02	J02	D04	20	H
Data set ready (DSR)	S10	B13	J09	D02	6	E
Request to send (RTS)	P06	B02	G03	D06	23	C
Clear to send (CTS)	S09	D13	G10	B08	17	D
Receive line signal detect (RLSD)	S13	B12	G12	D09	13	F
Wrap A	M10	B05	J07	B04	11	note
Xmit clock A	S08	B07	J04	D07	16	Y

Rcve clock A	S05	B08	J10	D05	22	V	
Wrap B	M10	B05	G05	B05	18	note	
Xmit clock B	S08	B07	G08	D13	15	a	
Rcve clock B	S05	B08	G04	D12	9	X	
Xmit data A	P13	D04	J05	B09	2	P	
Rcve data A	U10	B10	J13	B12	3	R	
Xmit data B	P13	D04	G02	B10	19	S	
Rcve data B	U10	B10	G09	B13	12	T	
Signal ground	D08	D08	D08	D08	7	B	

* I/O board cable socket
** I/O connector (cable tower, external cable side, 25-pin connector)
*** Modem cable connector (34 pin plug)

Note: The wrap A/B signal lines are for diagnostic purposes only and are not wired in the external cable.

Chart A
V.35 End of Cable Wrap

Note: The following lines are jumpered together when the V.35 wrap plug is connected to the end of the external cable.

	34 pin connector From	To	
Data Terminal Ready	H	E	Data set ready
Request to send	C	D	Clear to send and
		F	Receive line signal detect
Xmit data A	P	R	Receive data A
Xmit data B	S	T	Receive data B
Xmit clock A	Y	V	Receive clock A *
Xmit clock B	a	X	Receive clock B *

* 2 board jumpers needed to supply clocking:
A-A3A5B04 to A-A3A5D07, A-A3A5B05 to A-A3A5D13

Chart B
V.35 Cable Tower Wrap

Note: The following lines are jumpered together when the 25-pin wrap connector is installed at the cable tower.

	Connector pin From	To	
Data terminal ready	20	6	Data set ready
Request to send	23	17	Clear to send, and
		13	Receive line signal detect
Xmit data A	2	3	Receive data A
Xmit data B	19	12	Receive data B
Wrap A	11	16	Xmit clock A, and
		22	Receive clock A
Wrap B	18	15	Xmit clock B, and
		9	Receive clock B

Chart C
V.35 DCE Wrap

Note: The following lines are jumpered together when the DCE wrap functions (test 1 and test 2) are activated at the local DCE.

	34-pin connector From	To	
Xmit data A	P	R	Receive data A (note 1)
Xmit data B	S	T	Receive data B (note 1)
(note 2)	-	Y	Xmit clock A
	-	a	Xmit clock B
	-	V	Receive clock A
	-	X	Receive clock B
Request to send	C	D	Clear to send
(note 3)	-	E	Data set ready
	-	F	Receive line signal detect

Note 1: Test 1 wraps the digital data circuitry only. Test 2 wraps through the analog (mod/demod) circuitry of the DCE.
Note 2: The DCE provides the clocking for the wrap function.
Note 3: Test 1: DSR and RLSD are set to the 'off' state by the DCE.
Test 2: DSR and RLSD are set to the 'on' state by the DCE.

Wrap card p/n 4233787 (raw card p/n 4233786) end 'B' is used at the board socket in place of the V.35 card when a board wrap is performed.
- If the wrap card is suspect, use this chart to check out end 'B'.

-Chart D-
End 'B'

From	To
B02	B13
B03	D12
B04	B08
B05	B07
B09	B12
D02	D13
D04	B10