SY31-0653-5

IBM 5294 Control Unit Maintenance Library

Maintenance Information
Parts Catalog
I/PAR Code Guide
CE/CSR Log

IBM 5294
Control Unit
Maintenance Library

Maintenance Information
Parts Catalog
I/PAR Code Guide
CE/CSR Log

Sixth Edition (November 1987)

This revision makes obsolete SY31-0653-4. Additions and changes were made to include information on the IBM Text Entry Assist "A" feature. Miscellaneous technical changes have been made throughout the manual.

The drawings and specifications contained herein shall not be reproduced in whole or in part without written permission.

IBM has prepared this maintenance manual for the use of IBM customer engineers/customer service representatives in the installation, maintenance, or repair of the specific machines indicated. IBM makes no representations that it is suitable for any other purpose.

Information contained in this manual is subject to change from time to time. Any such change will be reported in subsequent revisions.

References in this publication to IBM products, programs, or services do not imply that IBM intends to make these available in all countries in which IBM operates.

Publications are not stocked at the address given below. Requests for IBM publications should be made to your IBM representative.

This publication could contain technical inaccuracies or typographical errors. A form for readers' comments is provided at the back of this publication. If the form has been removed, comments may be addressed to IBM Corporation, Information Development, Department E02, Research Triangle Park, Raleigh, North Carolina, U.S.A. 27709. IBM may use or distribute whatever information you supply in any way it believes appropriate without incurring any obligation to you.

© Copyright International Business Machines Corporation 1984, 1987

Preface

This manual is to be used by qualified maintenance personnel for servicing the IBM 5294 Control Unit. Maintenance personnel should have completed the IBM 5294 Control Unit education course.

This manual uses a specific range of words so that the text can be understood by customer engineers in countries where English is not the normal language.

This manual is divided into three major parts: maintenance information, parts catalog, and I/PAR code guide and CE/CSR log. At the back of the manual are the glossary, legend, and index.

The maintenance information contains locations drawings, power specifications, cabling information, indicators and switch information, tests and service aids, diagnostics and error codes descriptions, and theory.

The parts catalog contains parts diagrams showing machine parts and part number listings.

The I/PAR code guide and CE/CSR log provide information for reporting repair actions and failures and for logging the maintenance history of the machine.

At the back of the manual are the *Glossary*, *Legend*, and *Index*. The *Glossary* contains descriptions of abbreviations and of words not in the word range specified for this manual. The *Legend* contains descriptions of the symbols used in the figures and diagrams in this manual. The *Index* is an alphabetic list of key words used in this manual.

This manual is designed for use with the *IBM 5294 Control Unit Maintenance Analysis Procedures (MAPs)* manual, SY31-0652.

Related Publications

- *IBM Synchronous Data Link Control General Information*, GA27-3093
- *IBM 5250 Information Display System Functions Reference Manual*, SA21-9247
- *IBM 5251 Models 2 and 12 Maintenance Information Manual*, SY31-0463
- *IBM Systems Network Architecture Handbook, Customer Service Division*, S229-4522
- *Introduction to Data Communications for Customer Engineers*, ZY31-0634
- *IBM 5294 Control Unit Setup Procedure*, GA21-9369
- *IBM 5294 Control Unit Operator's Guide and Operating Procedures*, GA21-9370
- *IBM Communications Systems Bulletin, X.25 Primer*, GG22-9103
- *IBM X.25 Interface for Attaching IBM SNA Nodes to Packet-Switched Data Networks General Information Manual*, GA27-3345
- *IBM 5294 Control Unit Reference Card*, ZX21-9498
- *IBM Implementation of X.21 Interface General Information Manual*, GA27-3287
- *IBM Cabling System Planning and Installation Guide*, GA27-3361

Contents

Safety ..... **ix**
Danger and Caution Notices ix
Danger Notices ix
Caution Notices ix
CSR Safety Practices x
Artificial Respiration xi
General Considerations xi
Rescue Breathing for Adults xi
Safety Inspection xii
Safety Inspection
How To Conduct This Safety Inspection ... xii
External Inspection xiii
Internal Inspection xiii

How to Use This Maintenance Library ..... **xvii**
Maintenance Information xvii
General Maintenance Information xvii
Communication Feature Information xvii
Diagnostics and Test Information xvii
System Reference Codes xviii
Service Aids xviii
Tools and Test Equipment xviii
Theory xviii
Feature Theory xviii
Parts Catalog xviii
I/PAR Code Guide and CE/CSR Log xviii
Glossary xviii
Index xviii

Maintenance Information **1-1**
General Locations 1-3
0110 Covers and Control Panel 1-3
0111 Top View 1-4
0112 Rear View (Including the I/O Panel) 1-5
0113 Logic Cards and Planar Locations 1-6
Power Supply 1-7
0210 Power Supply Locations 1-7
0220 AC Power Distribution 1-8
0230 DC Power and POR Signal Distribution .. 1-9
0231 DC Power Supply Voltage Level Check . 1-10
0232 DC Power Supply Ripple Level Check . 1-11
0240 Power Supply Removal and Replacement Procedure 1-12
0241 Internal AC Cable Assembly Removal and Replacement Procedure 1-13
0242 Fan Removal and Replacement Procedure 1-14
0260 Ground Circuits 1-15
Control Panel (Including LEDs and Test Switch) 1-16
0320 Control Panel Wiring (Including LEDs and Switches) 1-16
0340 LED and Cable Assembly Removal and Replacement Procedure 1-17
0341 Switch Removal and Replacement Procedures 1-17
0360 LEDs and Switch Descriptions 1-18
LEDs Description 1-18
Test Switch Description 1-19
Rate Select Switch Description 1-19
Planar 1-21
0410 Connector and Test Points Locations .. 1-21
0440 Planar Removal and Replacement Procedure 1-22
0460 Work Station Controller Configuration Procedures 1-23
0460.1 Configuration Procedure for SDLC ... 1-24
0460.2 Configuration Procedure for X.25 1-26
Procedure for Entering X.25 Configuration Data 1-29
0460.3 Language ID Code Description 1-30
Entering Language ID Codes for Single and Multiple Language Sites 1-31
Entering Single Language ID Codes 1-31
Entering Multiple Language ID Codes ... 1-31
0460.4 Communication Configuration Description 1-32
SDLC - Field 3 1-32
X.25 - Field 4 1-33
X.25 - Field 5 1-33
X.25 - Field 6 1-33
0460.5 IBM 5294 Control Unit Setup Form ... 1-34
0460.6 Configuration Procedure for X.21 Switched 1-35
I/O Panel and Twinaxial Ports 1-36
0510 Locations and Wiring (Inside View) 1-36
0520 Planar to Driver/Receiver Card to Ports Lines 1-38
0540 Internal Twinaxial Cable Assembly Removal and Replacement Procedure 1-41
Logic Board 1-42
0610 Logic Board, Top View—Card and Connector Locations 1-42
0611 Logic Board, Bottom View—Probing Locations 1-43
0640 Logic Board Removal and Replacement 1-44
Feature ROS Card 1-46
0710 Locations 1-46

0740 Feature ROS Card Removal and Replacement 1-47
0741 Feature ROS Module Removal and Replacement Procedure 1-47
Communication Feature Information 1-50
1000 How to Use Communication Tables ... 1-50
1021A Table of Communication Lines – EIA (Part 5864668 Only) 1-51
1021B New Type EIA Card 1-53
1022 Table of Communication Lines – DDSA . 1-55
1023A Table of Communication Lines – XLCA 1-57
1023B Table of Communication Lines – XLCA 1-59
1030 Communication Wrap Tests 1-61
How to Use the Wrap Tests 1-62
Wrap Level Descriptions 1-63
How to Use Wrap Levels 1 through 6 1-63
1031 Clock Synchronization Check 1-65
1040 Communication Card Removal and Replacement – EIA, DDSA, and XLCA 1-66
1041 Internal Communication Cable Removal and Replacement Procedure 1-66
1050 EIA Jumpers 1-67
1051 DDSA Jumpers 1-67
1052 XLCA Jumpers 1-68
Clear-to-Send (CTS) Delay Jumpers 1-68
Other Jumpers 1-68
1060 dB-to-Voltage Conversion Table 1-69
1061 EIA/CCITT Interface Reference Information 1-70
Supply Voltages and Ground Pins 1-70
EIA/CCITT Interface Lines between the DTE and DCE 1-71
Signal Line Descriptions 1-72
1062 DDSA Interface Reference Information . 1-74
Transmission Signal 1-74
Idle Characters 1-75
Zero Suppression Characters 1-76
Out-of-Service Characters 1-77
Signal Line Descriptions 1-78
Transmit Levels 1-78
1063 XLCA Interface Reference Information . 1-79
Transmit Levels 1-79
Interface Signal Lines to the Planar 1-79
XLCA Interface Signal Lines to the DCE .. 1-80
XLCA Card Application 1-80
XLCA Interface Signal Lines from the Planar to the DCE 1-81
1064 Communication Card Identification 1-82
Diagnostics and Test Information 1-84
2001 Operation Flowchart 1-84
2002 Diagnostic Summary 1-85
2003 Test Request Selection 1-86
2010 Power-on Diagnostics 1-93
Correct Operation 1-93
2011 Free Key Operation 1-97
2012 CE/CSR Tests – Dedicated Mode (Tests 61 through 6F) 1-98
Test Procedure 1-98
Dedicated Mode Display Screen 1-99
CE/CSR Test - Dedicated Mode Flowchart 1-100
2013 CE/CSR Tests – Concurrent Mode (CE/CSR Tests C1, C2, C3) 1-107
Test Description 1-107
CE/CSR Test - Concurrent Mode Flowchart 1-108
Test Procedure 1-109
Concurrent Mode Display Screens 1-110
2014 Online Tests 1-117
Test Procedure 1-117
Online Test Aids 1-119
Display Verification 1-119
Link Tests 1-123
2050 Error Logs 1-124
Error Log Information 1-124
Error Log Buffer 1-124
PLE Log 1-124
Hard Error (HE) Log 1-124
Host Error Logging 1-124
SDLC Error Counters (60 through 6D) 1-125
Statistical Counters (6E and 6F) 1-125
2100 System Reference Codes 1-127
Error Code Summary Table 1-128
2110 Operator Error Codes 1-130
2111 Operator Error Codes for Model K01/S01 Only 1-133
2112 Operator Error Codes for Text Entry Assist Feature Only 1-135
2120 Work Station Controller Error Codes . 1-136
2130 Display Station Logged Hardware Error Codes 1-138
2140 Printer Error Codes 1-141
2150 X.25 Operator Error Codes 1-142
2160 X.25 Communication Error Codes 1-144
2165 Operator Error Codes for X.21 Switched Support Feature Only 1-149
2166 X.21 Communication Errors (X.21 Switched Support Feature Only) 1-149
2170 Communication Diagnostics Error Codes 1-153
Error Detail Field Definitions 1-154
2180 Power-On Diagnostics Error Codes .. 1-155
2190 Error History Table (ERAP) Description 1-158
ERAP Description (continued) 1-159
ERAP Description (continued) 1-160
Service Aids 1-161
3001 Cable Signal Quality Check 1-161

Normal Cable 1-161
Shorted Cable 1-161
Measuring Distance 1-162
Oscilloscope Setup and Extra Parts Needed 1-163
Open Cable 1-164
Oscilloscope Settings 1-164
Adjusting the Oscilloscope for the Correct Display 1-164
3002 Line Continuity and Polarity Reversal Tests 1-168
Line Continuity 1-168
Line Polarity 1-168
3003 Work Station Twinaxial Interface Check 1-169
3004 IBM Cabling System Tests 1-171
Impedance Matching Device or Direct-Connect Cable Check 1-171
Twinaxial Y Test 1-173
Twinaxial Terminator Assembly Test ... 1-174
3005 IBM Cabling System Data Path Tests . 1-175
Test for Cable Drop from Distribution Panel to Controller 1-177
Test for Cable Drop from Distribution Panel to Work Stations Except the Last Work Station on the Data Path 1-178
Test for Cable Drop to Last Work Station on the Data Path 1-178
Test for Cable between Distribution Panels 1-178

Tools and Test Equipment 2-1
General/Integrated Logic Probe 2-2
Logic Probe Description 2-3
Logic Probe Accessories 2-3
Meters and Adapter 2-3
Special Tools 2-3

Theory 3-1
Work Station Controller Description 3-1
Functional Description 3-2
Planar 3-2
Data Flow 3-4
X.25 Communication Protocols 3-4
HDLC Control Field Frame Type/Format Identification 3-8
Control Field for the Information Transfer Format 3-8
Control Field for the Supervisory Format .. 3-8
Control Field for Unnumbered Format ... 3-10
Packet Level Functions 3-11
Packet Header and Format 3-11
Packet Data Field Contents 3-13
Data Packets 3-13
Other Packets 3-13
User Data Field 3-14
Call Connected Packets Data Field Contents 3-14
Logical Link Control Types and Formats 3-20
Physical Services Header Format 3-21
Qualified Logical Link Control Format ... 3-21
Enhanced Logic Link Control Format 3-24
Control Field for the Information Protocol Data Unit 3-25
ELLC Control Field for the Supervisory Protocol Data Unit 3-26
ELLC Control Field for the Unnumbered Protocol Data Unit 3-27
Synchronous Data Link Control (SDLC) Description 3-28
Zero-Bit Insertion/Deletion 3-28
NRZI (Non-return to Zero Inverted) 3-29
SDLC Transmissions 3-29
SDLC Frame Format 3-30
Leading Pad 3-30
Starting Flag 3-30
Station Address 3-30
Control Field 3-31
Information Field 3-31
Frame Check Sequence 3-31
Ending Flag 3-31
SDLC Commands and Responses Supported by the IBM 5294 Control Unit (Work Station Controller) 3-32
Control Field Format 3-34
Control Field for the Supervisory Format . 3-34
Control Field for the Information Transfer Format 3-34
Control Field for the Unnumbered Format 3-35
SDLC Response Modes 3-37
SDLC Transmission States 3-37
Disconnect State (Switched Lines Only) .. 3-37
Systems Network Architecture (SNA) Support .. 3-38
BIND Request Contents 3-38
SNA Information Field 3-40
Transmission Header 3-41
Request Header/Response Header 3-42
SNA/SDLC Session Flow 3-44
X.21 Switched Communication Protocol 3-45
Control Codes Received 3-46
Control Codes Sent 3-46
X.21 Interface States 3-47
Interface State Diagrams 3-48
Switched Network Calling and Answering Sequences 3-52
Switched Network Calling Sequence 3-52
Switched Network Answering Sequence .. 3-53

Switched Network Call Clearing 3-54
Switched Network Call Clearing Sequence .. 3-55
Call Clearing after Normal Data Transfer Operation 3-55
Call Clearing after Facility Registration or a 5294-Detected Error 3-55
After a DCE/Network-Detected Error or a Clear Request by the Remote DTE (Host System) 3-56

Features Theory **4-2**
Extended Cluster Feature 4-3
EIA/CCITT Interface Feature 4-3
Digital Data Service Adapter (DDSA) Feature . 4-3
XLCA Feature 4-3
X.21 Switched Support Feature 4-4
X.25 Feature 4-4
Multinational Character Set Feature 4-5
Hex Key Function 4-5
Diacritic Key Function 4-6
Using the Hexadecimal Code to Enter a Character 4-7
Expanded Function Feature 4-8
Copy-to-Printer Support (Not Supported By Some Systems; See the System Documentation) 4-8
Magnetic Stripe Reader (MSR) Support ... 4-8
Selector Light Pen (SLP) Support 4-9
Self-Check Support (Modulus 10 and 11) .. 4-9
Modulus 10 4-10
Modulus 11 4-10
Extended Function A Feature 4-11
Text Entry Assist Feature 4-11
Enhanced Keyboard Feature 4-11

Parts Catalog **5-2**
How to Use a Parts Catalog 5-2
Catalog Section 5-2
Numerical Index 5-2

CE/CSR Log **6-2**

Glossary **G-1**

Legend **G-9**

Index **X-1**

Safety

Danger and Caution Notices

Throughout this manual, the word DANGER is used to inform you of an action that could cause a personal injury. The word CAUTION is used to inform you of an action that could damage the machine or affect the running of a customer program.

Danger Notices

The IBM 5294 Control Unit (work station controller) has the following specific DANGER:

DANGER
Do not connect AC voltage to the power supply when it is removed from the machine. Severe electrical shock could result. Safe grounding of the power supply is ensured only when the power supply is tightly fastened in the machine.

Another Danger notice appears in the following maintenance procedure: 0231 DC Power Supply Voltage Level Check.

Caution Notices

Caution notices appear in the following maintenance procedures:

0460	Work Station Controller Configuration Procedures
0741	ROS Module Removal and Replacement Procedure
1030	Communication Wrap Tests
2012	CE/CSR Tests – Dedicated Mode
2013	CE/CSR Tests – Concurrent Mode Logic Probe Description
3005	IBM Cabling System Data Path Tests

CSR Safety Practices

All Customer Service Representatives are expected to take every safety preca ution possible and observe the following safety practices while maintaining IBM equipment:

1. You should not work alone under hazardous conditions or around equipment with dangerous voltage. Always advise your manager if you MUST work alone.
2. Remove all power, ac and dc, when removing or assembling major components, working in immediate areas of power supplies, performing mechanical inspection of power supplies, or installing changes in machine circuitry.
3. After turning off wall box power switch, lock it in the Off position or tag it with a "Do Not Operate" tag, Form 229-1266. Pull power supply cord whenever possible.
4. When it is absolutely necessary to work on equipment having exposed operating mechanical parts or exposed live electrical circuitry anywhere in the machine, observe the following precautions:
   a. Another person familiar with power off controls must be in immediate vicinity.
   b. Do not wear rings, writst watches, chains, bracelets, or metal cuff links.
   c. Use only insulated pliers and screwdrivers.
   d. Keep one hand in pocket.
   e. When using test instruments, be certain that controls are set correctly and that insulated probes of proper capacity are used.
   f. Avoid contacting ground potential (metal floor strips, machine frames, etc.). Use suitable rubber mats, purchased locally if necessary.
5. Wear safety glasses when:
   a. Using a hammer to drive pins, riveting, staking, etc.
   b. Power or hand drilling, reaming, grinding, etc.
   c. Using spring hooks, attaching springs.
   d. Soldering, wire cutting, removing steel bands.
   e. Cleaning parts with solvents, sprays, cleaners, chemicals, etc.
   f. Performing any other work that may be hazardous to your eyes. REMEMBER—THEY ARE YOUR EYES.
6. Follow special safety instructions when performing specialized tasks, such as handling cathode ray tubes and extremely high voltages. These instructions are outlined in CSRMs and the safety portion of the maintenance manuals.
7. Do not use solvents, chemicals, greases, or oils that have not been approved by IBM.
8. Avoid using tools or test equipment that have not been approved by IBM.
9. Replace worn or broken tools and test equipment.
10. Lift by standing or pushing up with stronger leg muscles—this takes strain off back muscles. Do not lift any equipment or parts weighing over 60 pounds.
11. After maintenance, restore all safety devices, such as guards, shields, signs, and grounding wires.
12. Each Customer Service Representative is responsible to be certain that no action on his part renders products unsafe or exposes customer personnel to hazards.
13. Place removed machine covers in a safe out-of-the-way place where no one can trip over them.
14. Ensure that all machine covers are in place before returning machine to customer.
15. Always place CSR tool kit away from walk areas where no one can trip over it; for example, under desk or table.
16. Avoid touching moving mechanical parts when lubricating, checking for play, etc.
17. When using stroboscope, do not touch ANYTHING—it may be moving.
18. Avoid wearing loose clothing that may be caught in machinery. Shirt sleeves must be left buttoned or rolled above the elbow.
19. Ties must be tucked in shirt or have a tie clasp (preferably nonconductive) approximately 3 inches from end. Tie chains are not recommended.
20. Before starting equipment, make certain fellow CSRs and customer personnel are not in a hazardous position.
21. Maintain good housekeeping in area of machine while performing and after completing maintenance.

Knowing safety rules is not enough. An unsafe act will inevitably lead to an accident. Use good judgment—eliminate unsafe acts.

Artificial Respiration

General Considerations

1. Start Immediately—Seconds Count. Do not move victim unless absolutely necessary to remove from danger. Do not wait or look for help or stop to loosen clothing, warm the victim, or apply stimulants.
2. Check Mouth for Obstructions. Remove foreign objects. Pull tongue forward.
3. Loosen Clothing—Keep Victim Warm. Take care of these items after victim is breathing by himself or when help is available.
4. Remain in Position. After victim revives, be ready to resume respiration if necessary.
5. Call a Doctor. Have someone summon medical aid.
6. Don't Give Up. Continue without interruption until victim is breathing without help or is certainly dead.

Rescue Breathing for Adults

1. Place victim on his back immediately.
2. Clear throat of water, food, or foreign matter.
3. Tilt head back to open air passage.
4. Lift jaw up to keep tongue out of air passage.
5. Pinch nostrils to prevent air leakage when you blow.
6. Blow until you see chest rise.
7. Remove your lips and allow lungs to empty.
8. Listem for snoring and gurglings—signs of throat obstruction.
9. Repeat mouth to mouth breathing 10 - 20 times a minute. Continue rescue breathing until victim breathes for himself.

Thumb and finger positions

Final mouth-to-mouth position

Safety Inspection

Preparation

Start the following procedure with the machine powered off and electrical power removed from the machine.

See the following:

- All CSRMs (customer service representative memorandums), ECAs (engineering change announcements), and SAs (service aids) for this machine type
- *IBM 5250 Information Display System Planning and Site Preparation Guide*, GA21-9337
- *Electrical Safety for IBM Customer Service Representatives*, S229-8125
- *CSR Electrical Safety Course*, FIS-77170

How To Conduct This Safety Inspection

This inspection guide aids you to identify possible unsafe conditions on machines that are being inspected. Each machine, as it was made, had all the necessary safety items installed to protect the owners, operators, and service personnel from injury. This procedure addresses only those items. Good judgment should be used to identify possible safety hazards not covered by this inspection guide.

If any unsafe conditions are present, contact your field manager for the suitable action to be taken before servicing the machine.

Also, think of the following safety hazards that may be present:

- Electrical hazards, especially primary power. For example, a frame without a good ground can cause serious or lethal electrical shock.
- Exploding hazards. For example, a damaged CRT face or distorted capacitors can explode and cause serious injury.
- Chemical hazards. For example, the use of solvents not specified by IBM may result in electrical, mechanical, or toxic hazards.

This guide contains a safety inspection procedure for the following specific safety hazard areas:

- External inspection
- Internal inspection

External Inspection

Perform the following checks:

- Are the external covers present, installed correctly, and in good condition?
- Is the machine line cord in good condition and of the correct size? A minimum of 18 gauge (wire size) with 3 conductors are needed. For example: If 18/3 is inscribed on the insulation of the cord, 18 indicates the gauge and 3 indicates the number of conductors in the cord.
- Is the machine line cord of the correct voltage rating? (The minimum voltage rating is 600 V. The voltage rating should be inscribed on the line cord.)
- Does the work station controller have the correct approved power plug for your country? See the Parts Catalog section, Line Cord chart for the correct plug type.
- Is the machine line cord connector damaged where the line cord enters the machine?
- Is there a good AC ground line from one end of the line cord to the other? The resistance of this conductor should be less than 1 ohm.
- Is the customer's line voltage the correct voltage for the power supply in the machine? (See the *CSR Electrical Safety Handbook for Power Receptacle Checking*.)
- Does the machine have a fuse-type warning label at Ⓐ?
- Does the machine voltage label match the customer's voltage?

Internal Inspection

Perform the following checks:

- Are there any obvious non-IBM engineering changes? If yes, has *R009 Non-IBM Alteration Attachment Survey* been completed?
- Are there any loose screws, contaminating chemicals, signs of water or moisture, signs of fire or smoke damage, metal particles or dust, or any other internal conditions that look hazardous?
- Are any cables visibly worn, pinched, or damaged in any way? Check the primary power area for loose cables.
- Does the work station controller frame have a good ground? Measure the resistance from the ground pin on the AC power plug to any metal frame or exposed metal part not carrying electrical current. This resistance must be less than 1 ohm.
- Are any of the capacitors in the power area leaking or distorted?
- Is the correct line fuse present at location Ⓑ?

Ⓐ
Fuse Type Warning Label
(part 2452618 for 100 V machines)
(part 2452631 for 200 V machines)

Ⓑ
Fuse
(2A SB for 100 V machines)
(1A SB for 200 V machines)

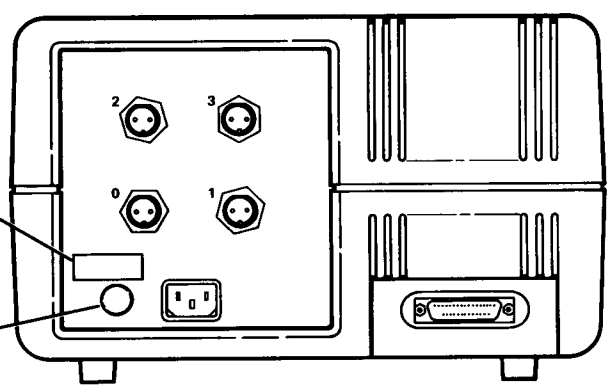

- Is there a cover over the line filter and fuse holder at location Ⓒ?
- Are there line voltage warning labels at the two locations Ⓓ?
- Is there a 550-volt warning label on the power supply at location Ⓔ?
- Are all parts installed in place tightly?

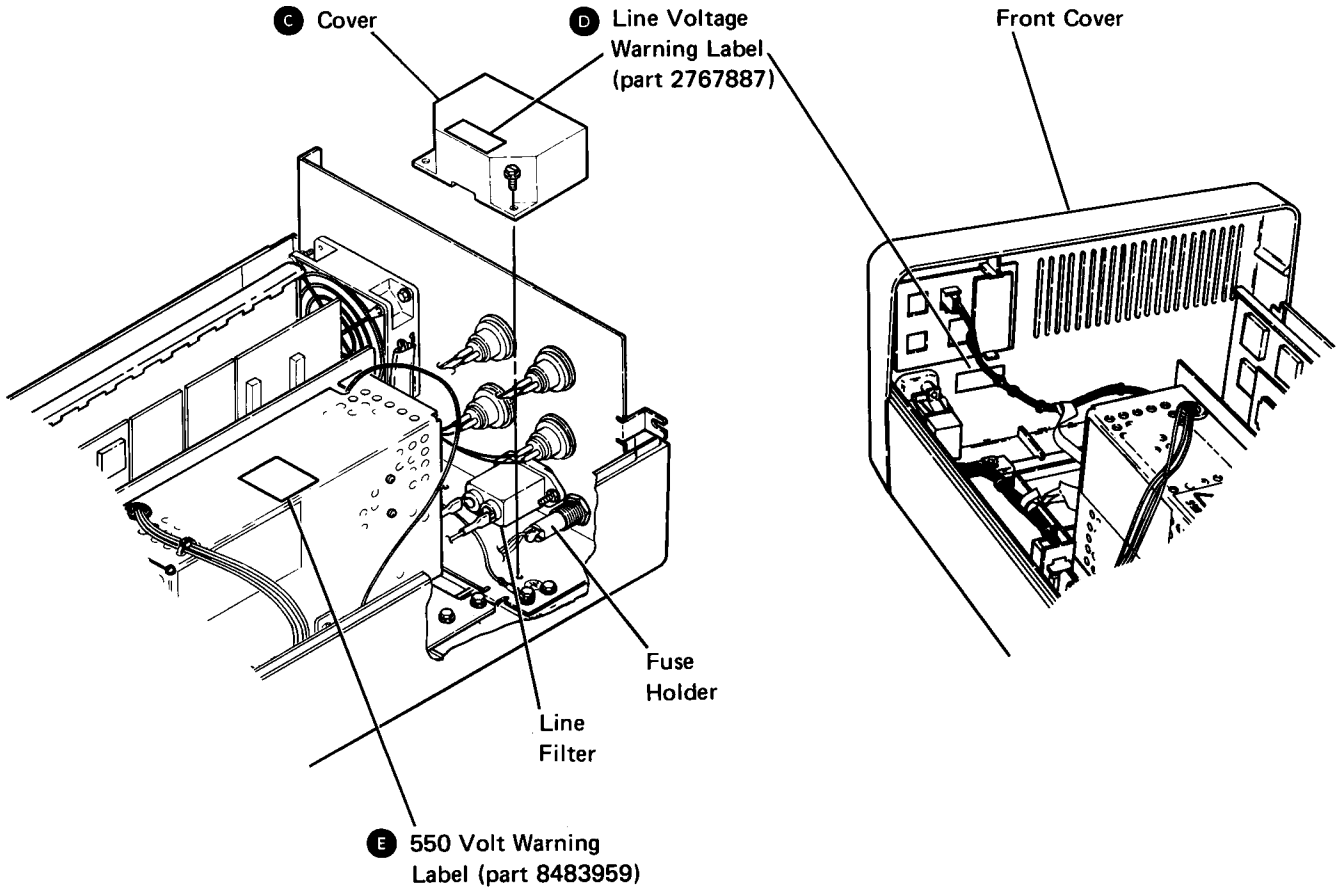

For your convenience, a form for comments is in the back of this publication.

How to Use This Maintenance Library

You should use the information in this manual as reference material when you are diagnosing machine failures.

The format for page numbering is X-YYY, where X is the section number and YYY is the page number.

Four-digit reference numbers are assigned to the maintenance information for reference from the MAPs. For example, 0210 reference the power supply locations of the IBM 5294 Control Unit (work station controller).

The first 2 digits of the reference numbers are assigned the following units:

01XX	Locations
02XX	Power Supply
03XX	Control Panel
04XX	Planar
05XX	I/O Panel and Twinaxial Ports
06XX	Logic Board
07XX	Feature ROS Card
10XX	Communication Feature Information
20XX	Diagnostics and Test Information
21XX	System Reference Codes
30XX	Service Aids

The last 2 digits of the reference number for 01xx through 10xx are assigned the following functions:

xx10	Locations
xx20	Maintenance diagrams
xx30	Service checks and test procedures
xx40	Removal and replacement procedures
xx50	Jumpers
xx60	Reference information

Maintenance Information

This part contains location drawings, maintenance procedures, service aids, and diagnostic aids for repairing, installing, or diagnosing FRUs (field-replaceable units). Location drawings show the positions of the parts in the work station controller.

Maintenance procedures contain removal and replacement procedures and probing information. All procedures and drawings have a 4-digit reference number assigned to reference from the MAPs.

No scheduled preventive maintenance is needed for this work station controller.

General Maintenance Information

This section contains general maintenance information such as location drawings; power distribution diagrams and power information; LEDs and switch descriptions; and control panel, planar, and logic board information.

Also in this section are the configuration procedures. (See reference 0460.)

Communication Feature Information

Information about the EIA, DDSA, and XLCA features are contained in this section, along with wrap test descriptions. Interface lines are diagrammed and described.

Diagnostics and Test Information

Diagnostic program descriptions, how to use them, and what is available when they are in control are found in this section. To aid in diagnosing machine failures in more detail, a list of error conditions is included. The Online Tests (2014) are contained in this section.

System Reference Codes

The system reference codes section, including error codes, defines all the codes for the IBM 5294 Control Unit and attached work stations. The codes are listed in numeric order. The codes are divided into subsections with subsection titles.

At the end of this section are the descriptions of the error history tables (ERAP).

Service Aids

The *Service Aids* section contains the Cable Signal Quality Check procedure and Line Continuity and Polarity Reversal Test procedure.

Tools and Test Equipment

The special tools needed to service the work station controller are described in this section.

Theory

This section contains descriptions of the major functional units. These descriptions are preceded by a general description of the system, which gives you an idea of the complete operation and where each of the major functions fit in.

Feature Theory

The features that are available with the work station controller are described in this section.

Parts Catalog

The *Parts Catalog* shows the parts of the machine and supplies a complete list of part numbers.

CE/CSR Log

This part supplies information for reporting and logging failures and repair actions.

Glossary

The *Glossary* contains definitions of abbreviations and acronyms used throughout this manual. It also contains definitions of terms not common to the limited vocabulary defined for CE/CSRs.

Index

The *Index* is a detailed list of all the key words used in this manual.

Maintenance Information

General Locations

0110 Covers and Control Panel

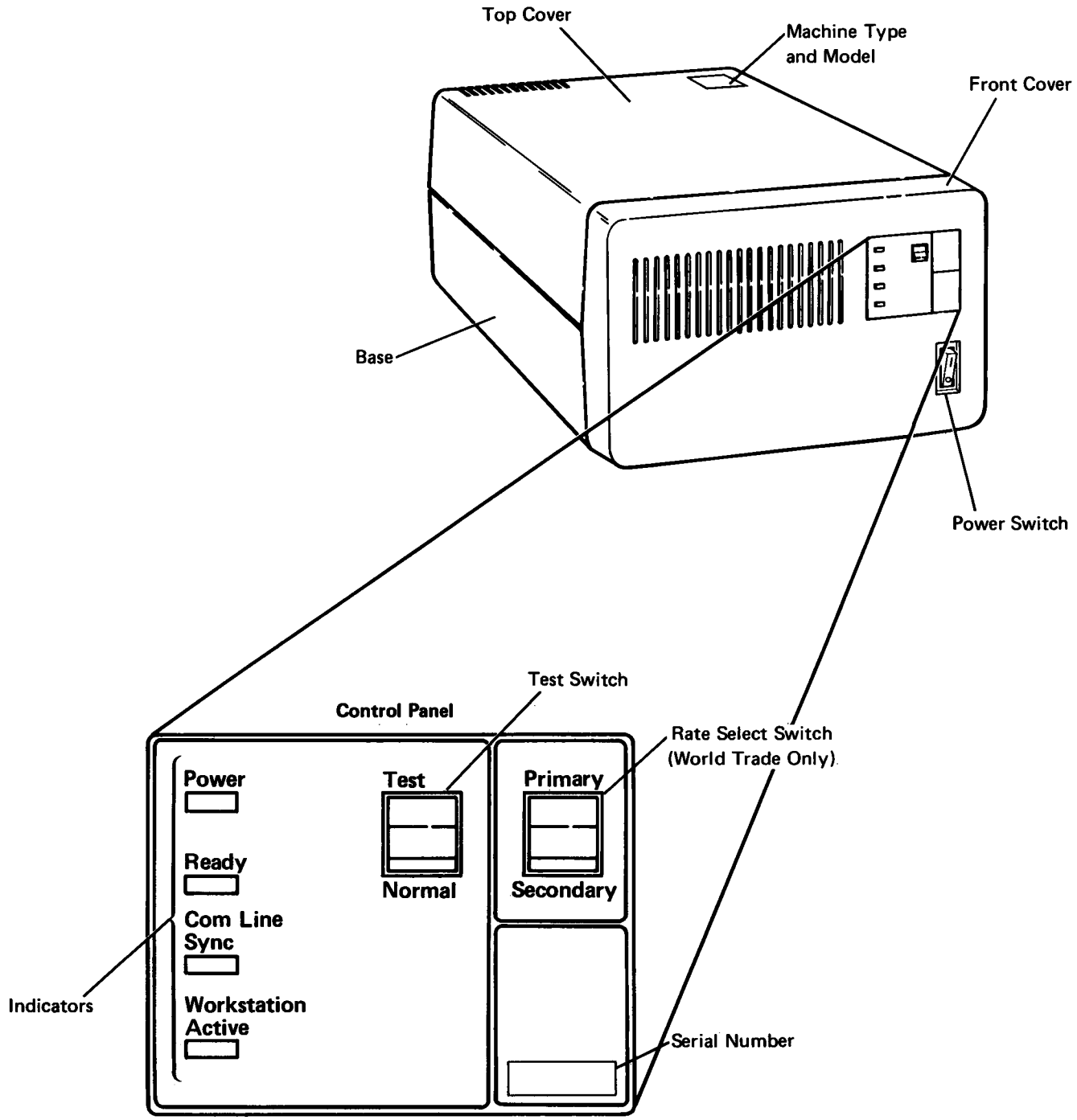

(See 0300 for internal view of the Control Panel.)

0111 Top View

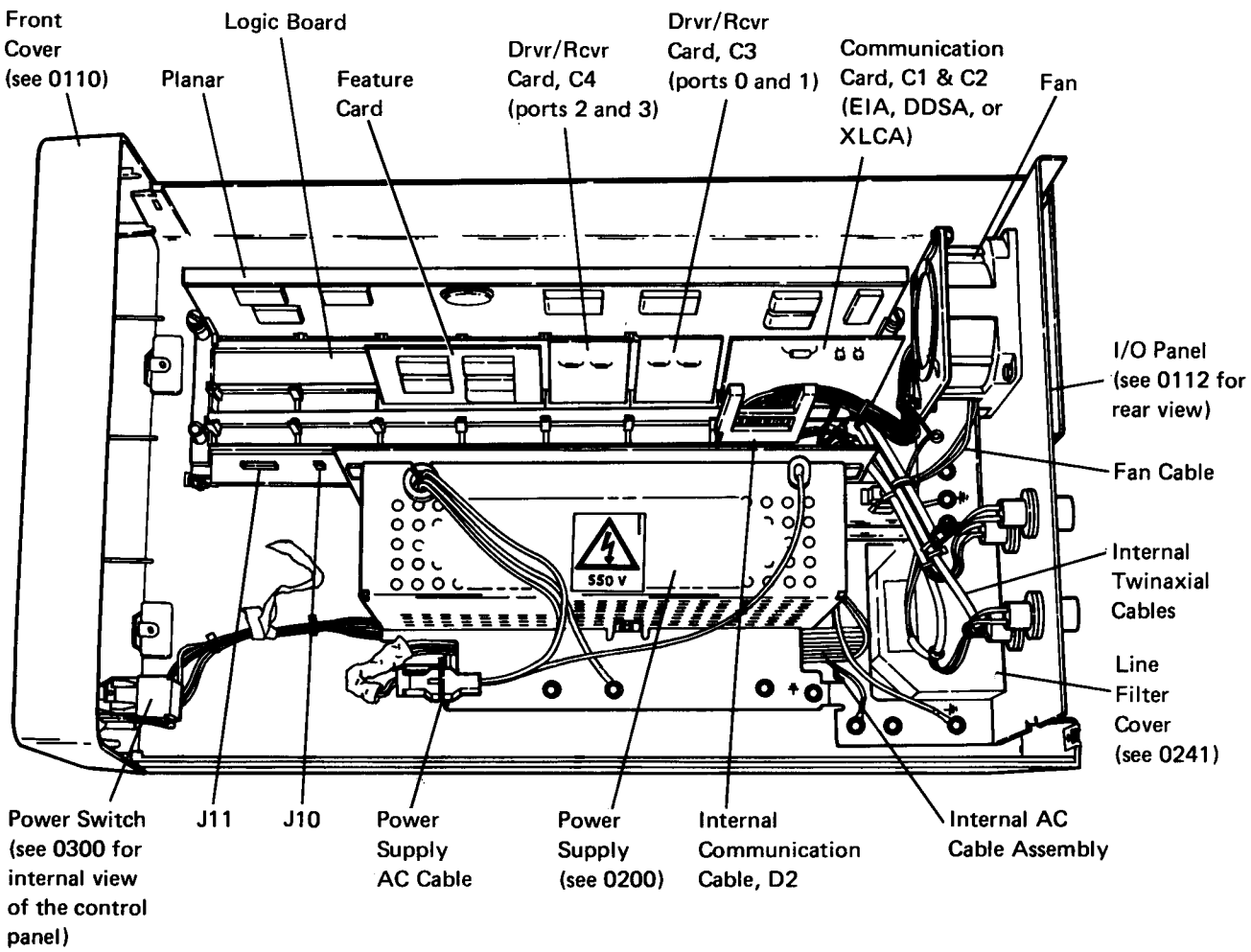

0112 Rear View (Including the I/O Panel)

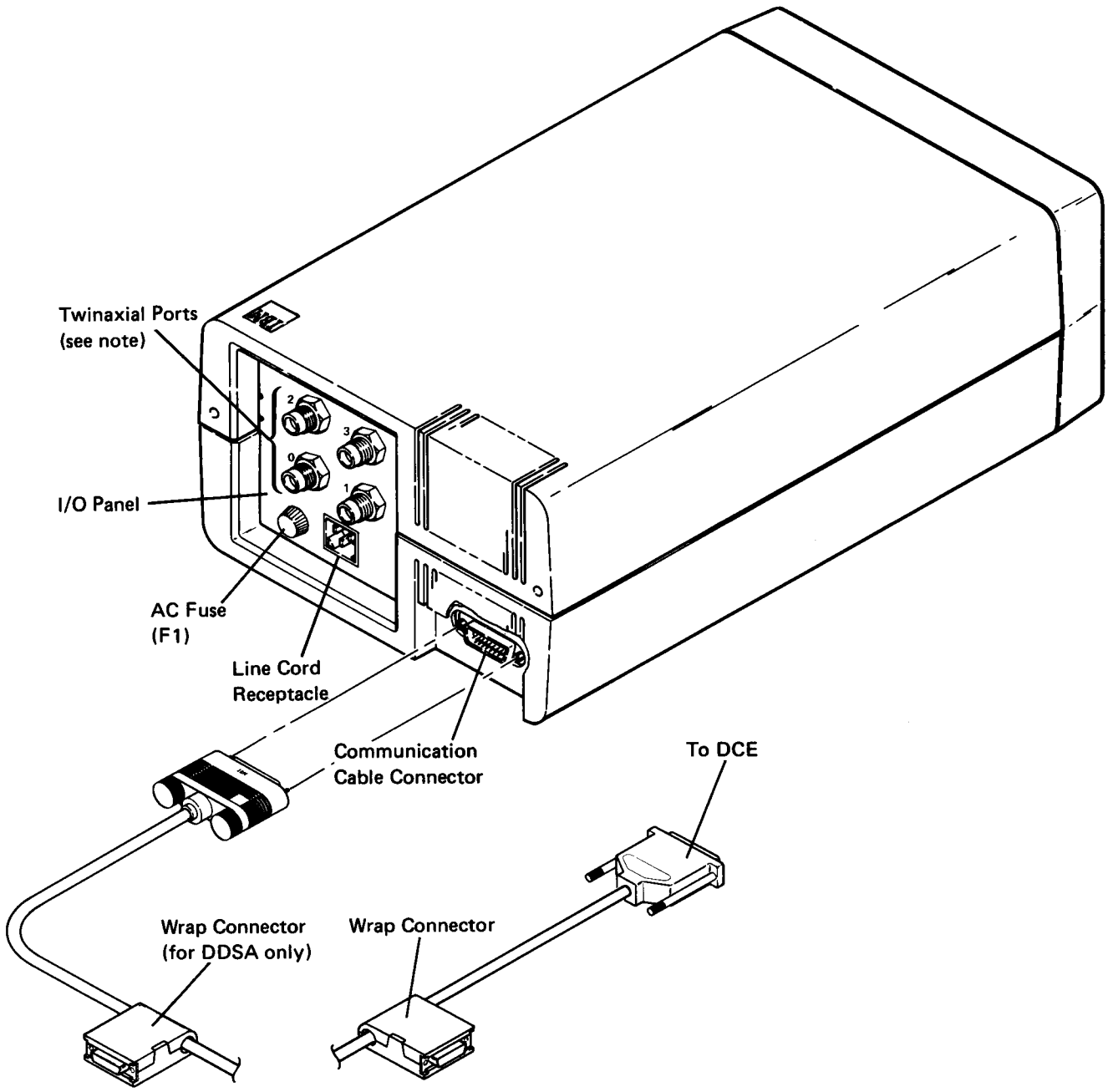

Note: Ports 2 and 3 are not present on all machines.

0113 Logic Cards and Planar Locations

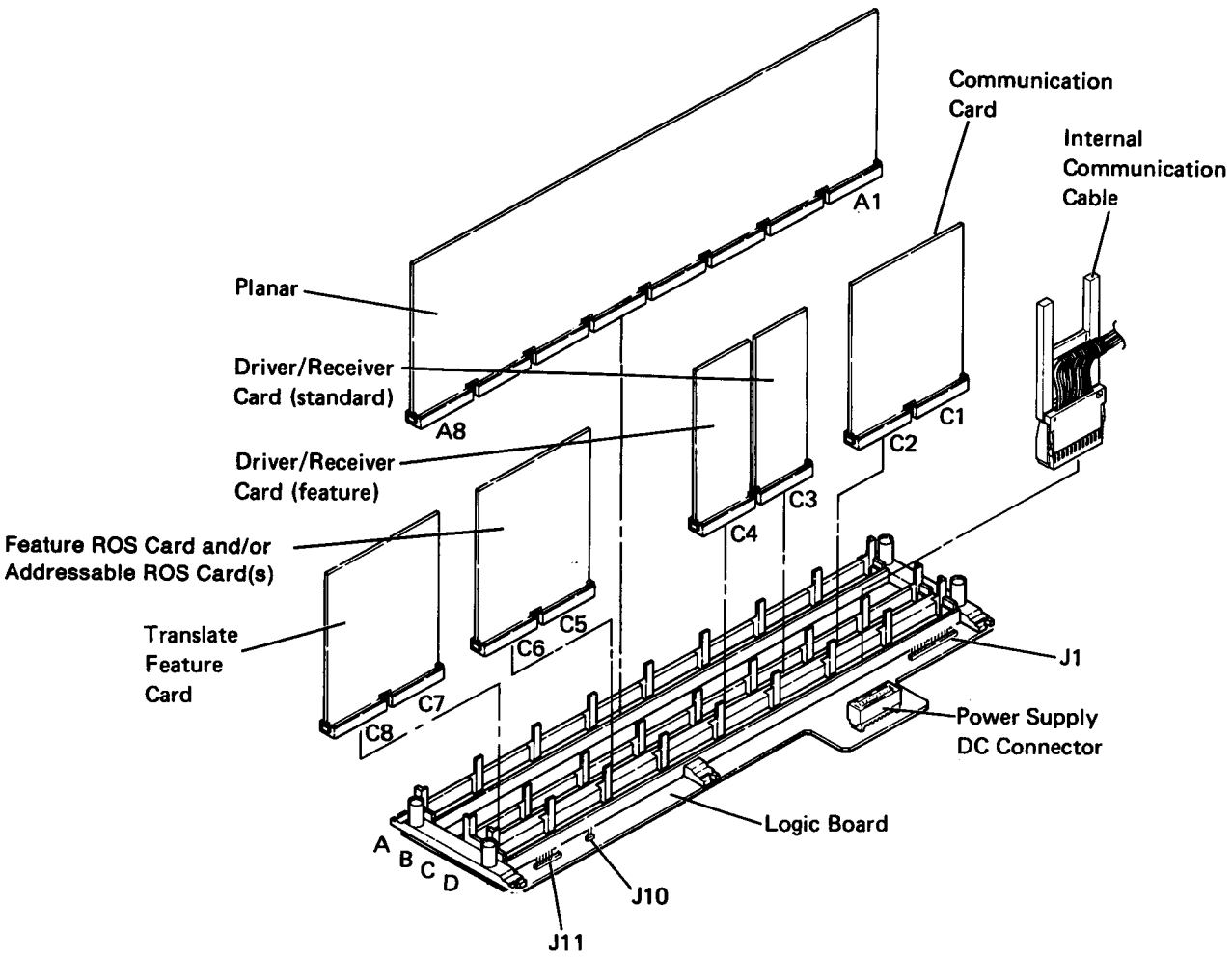

Power Supply

0210 Power Supply Locations

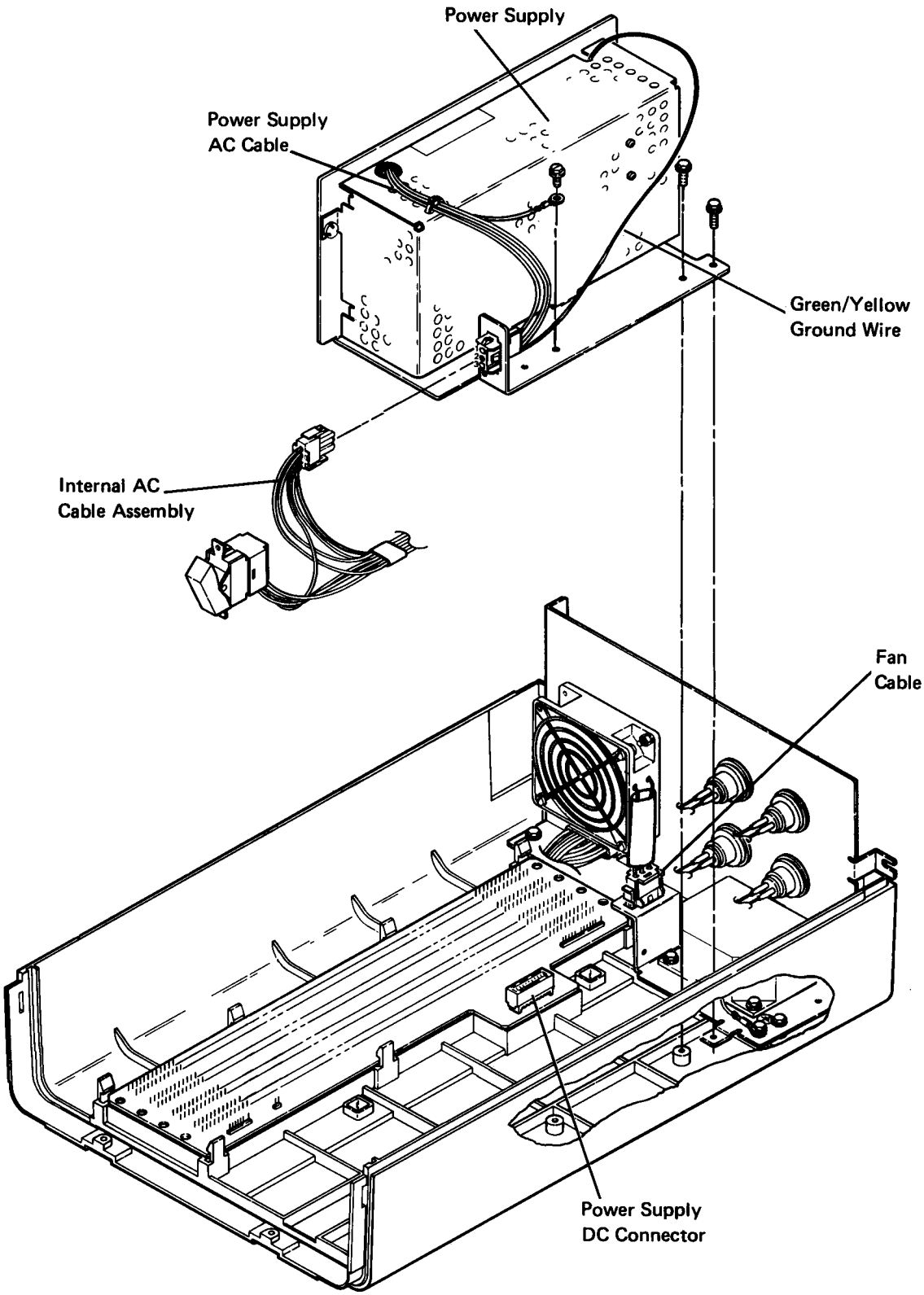

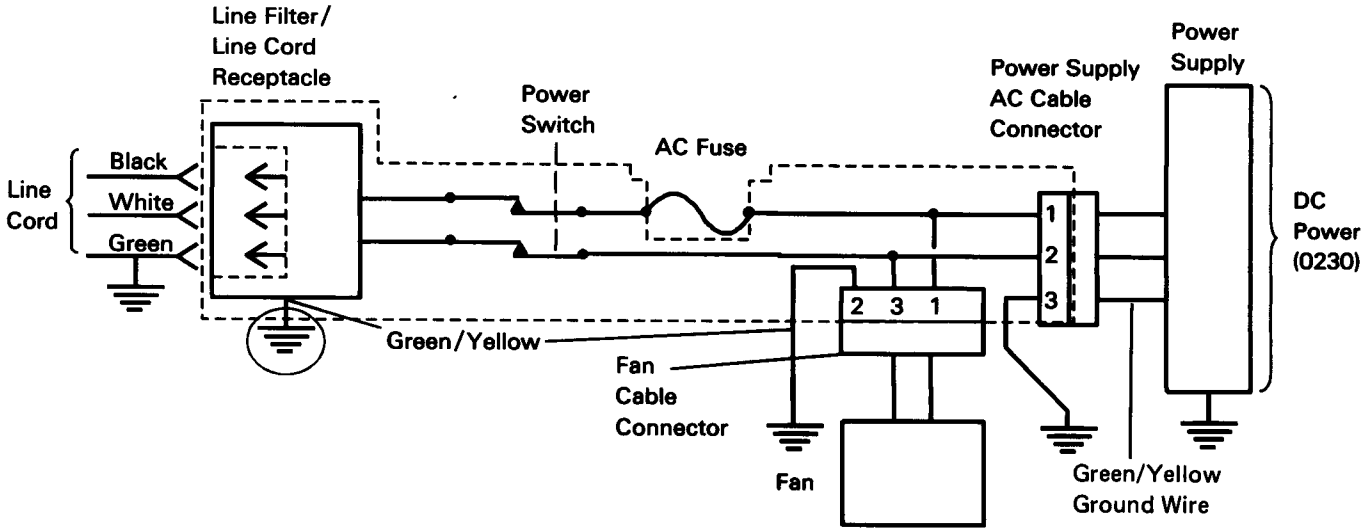

Note: All of the parts inside the dashed lines are one FRU, the internal AC cable assembly.

AC Voltage and Fuse Specifications

Voltage (RMS)	Voltage Range (RMS)	Frequency Range (Hertz)	Fuse Type	Fuse Part Number
100	90 to 137	48 to 62	2A SB	615693
200	180 to 259	48 to 62	1A SB	303549

0230 DC Power and POR Signal Distribution

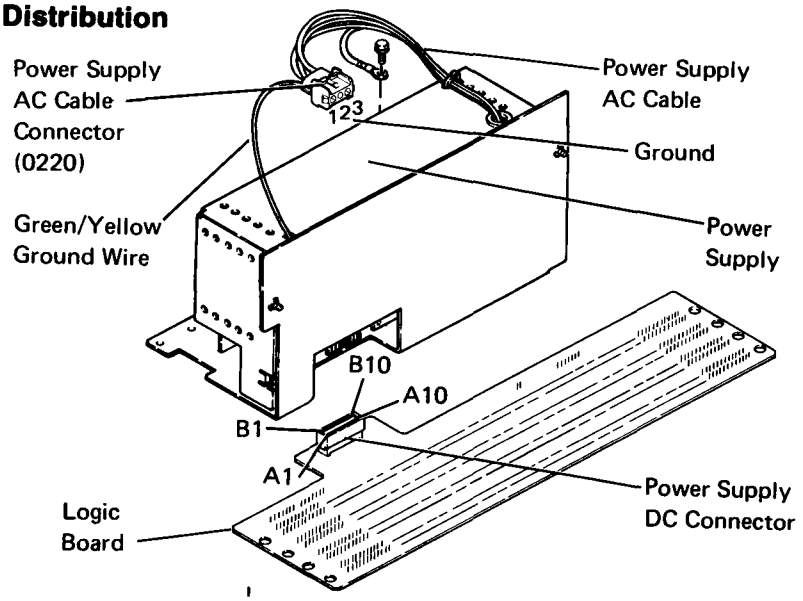

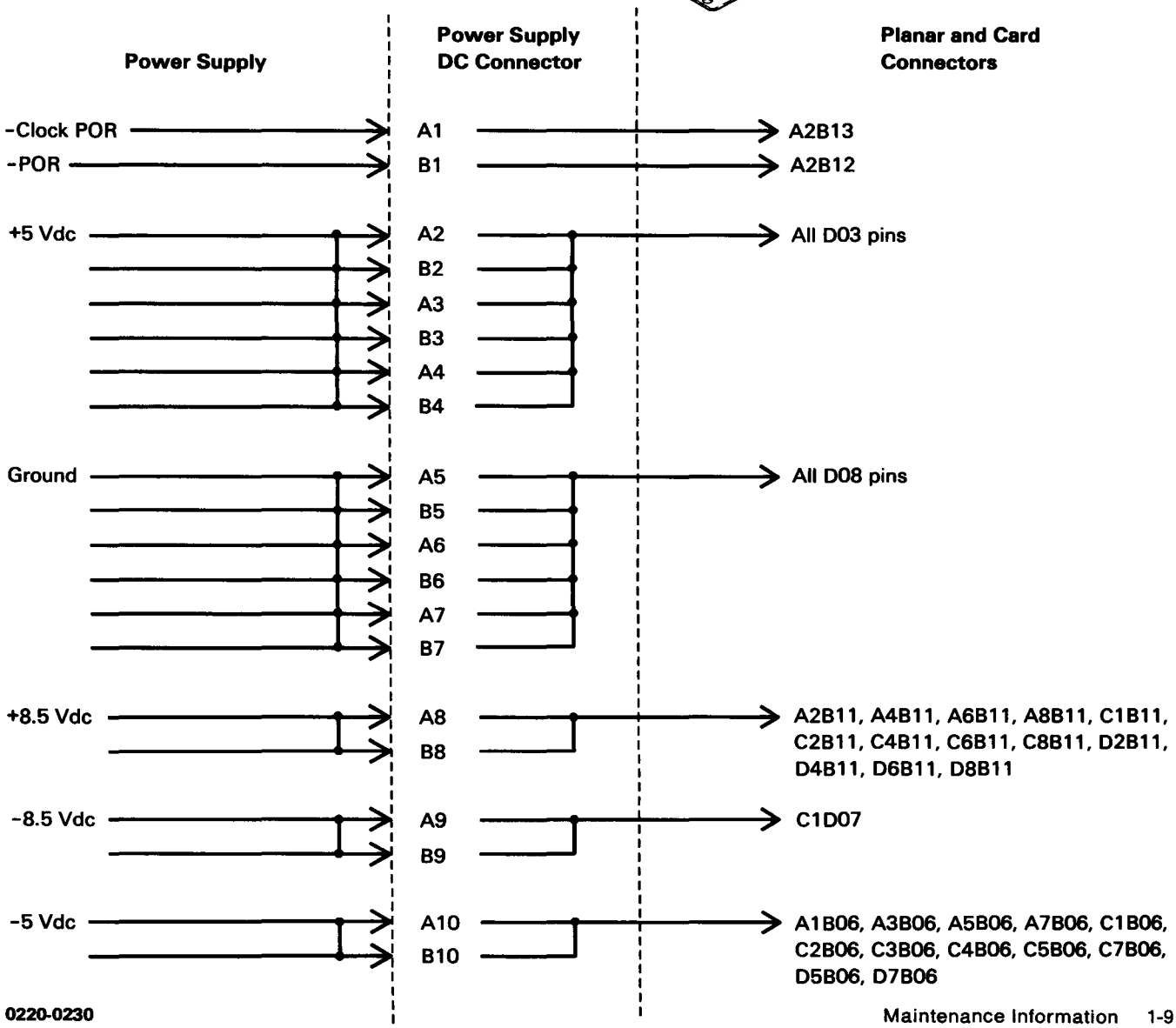

0231 DC Power Supply Voltage Level Check

The DC voltage levels can be checked as follows on the power cable to the planar board or at the power supply.

DANGER
Line voltage is present at the power supply.

DANGER
Do not connect AC voltage power to the power supply when it is removed from the machine. Severe electrical shock could result. Safe grounding of the power supply is ensured only when the power supply is securely fastened in the machine.

Power Supply/Logic Board Connectors	DC Voltage Levels	Planar and Card Connectors
A2-A4, B2-B4	+5 (+4.5 to +5.5)	All D03 pins
A10, B10	-5 (-4.5 to -5.5)	A1B06, A3B06, A5B06, A7B06 C1B06, C2B06, C3B06, C4B06, C5B06, C7B06, D5B06, D7B06
A8, B8	+8.5 (+7.7 to +9.4)	A2B11, A4B11, A6B11, A8B11, C1B11, C2B11, C4B11, C6B11, C8B11, D2B11, D4B11, D6B11, D8B11
A9, B9	-8.5 (-7.7 to -9.4)	C1D07
A5-A7, B5-B7	Ground	All D08 pins

0232 DC Power Supply Ripple Level Check

The peak-to-peak output ripple should be less than 4% of the respective DC voltages when measured with an oscilloscope. Use the values in the 'volts peak-to-peak' column of the table below.

When an oscilloscope is not available, ripple voltage can be observed by using the multimeter with the dB adapter as follows:

1. Set the dB adapter to Bridge mode.
2. Set the Range switch to 0 dB.
3. Connect one of the dB adapter leads to frame ground and the other lead to the DC voltage in question.
4. Change the setting on the Range switch until the meter needle is as close as possible to the medium range.
5. Use the *dB* column of the following table to determine if you have an acceptable ripple level.

When using a multimeter in the AC volts mode, use the values in the *Volts RMS* column of the following table to determine if you have an acceptable value.

Power Supply Voltage	Acceptable Ripple Level (dB)	Acceptable Ripple Level (Volts Peak-to-Peak)	Acceptable Ripple Level (Volts RMS)
5 Vdc	-19 dB to -60 dB	Less than 250 mv	Less than 173 mv
8.5 Vdc	-16 dB to -60 dB	Less than 340 mv	Less than 240 mv

0240 Power Supply Removal and Replacement Procedure

1. Power off the work station controller and remove the line cord from the AC outlet.
2. Remove the access panel from the bottom of the machine. Remove the mounting screws completely. The mounting screws also hold the power supply in position.
3. Disconnect the power supply AC cable.
4. Remove the five screws holding the power supply and shield to the base. Two of the screws hold the access cover on the bottom.
5. Remove the power supply and shield by lifting straight up.

Replace the power supply in the reverse order of removal.

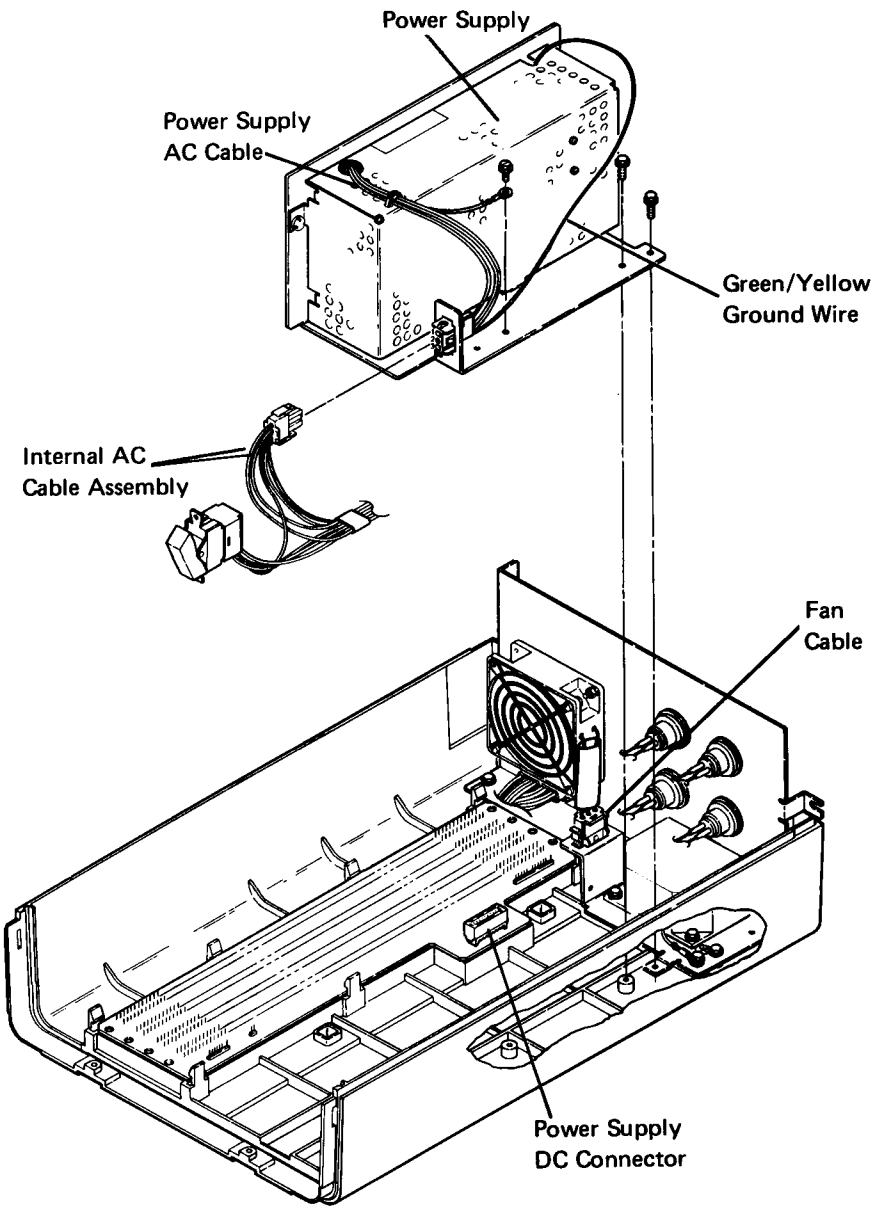

0241 Internal AC Cable Assembly Removal and Replacement Procedure

(Includes the internal AC cable, the fuse holder, the line filter, and the power switch)

1. Power off the work station controller and remove the line cord from the AC outlet.
2. Remove the power supply (0240).
3. Remove the line filter cover.
4. Remove the fuse holder from the I/O panel by first removing the fuse and then removing the mounting nut on the outside of the I/O panel.
5. Remove the line filter and the attached green and yellow ground wire from the I/O panel.
6. Disconnect the internal twinaxial cable from the logic board connector, J1 (0113), to make room to perform the next step.
7. Disconnect the fan cable from the internal AC cable connector.
8. Remove the fan and power supply AC cable connectors from the brackets by pinching the connector tabs and pushing down.
9. Remove the green and yellow ground wire from the AC cable to the I/O panel.
10. Remove the power switch from the front cover.
11. Remove the internal AC cable assembly from the machine.

Replace the internal AC cable assembly in the reverse order of removal.

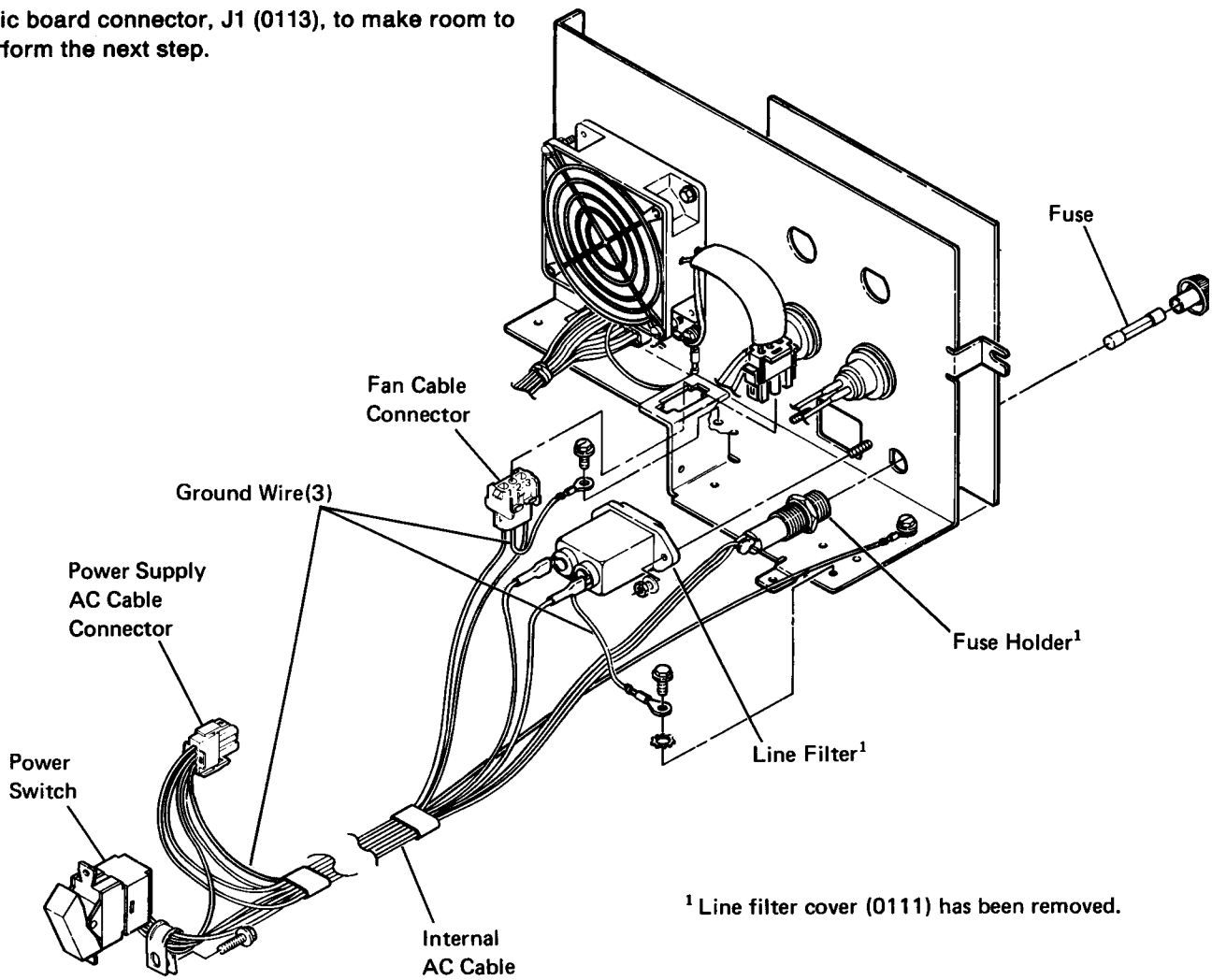

[1] Line filter cover (0111) has been removed.

0242 Fan Removal and Replacement Procedure

1. Power off the work station controller and remove the line cord from the AC outlet.
2. Disconnect the fan cable from the internal AC cable assembly.
3. Remove the two mounting screws holding the fan to the I/O panel.

   Note: You may have to remove some logic cards for easy access to the fan mounting screws.
4. Lift the fan from the base.
5. Remove the fan guard from the old fan and install it on the new fan.

Replace the fan in the reverse order of removal.

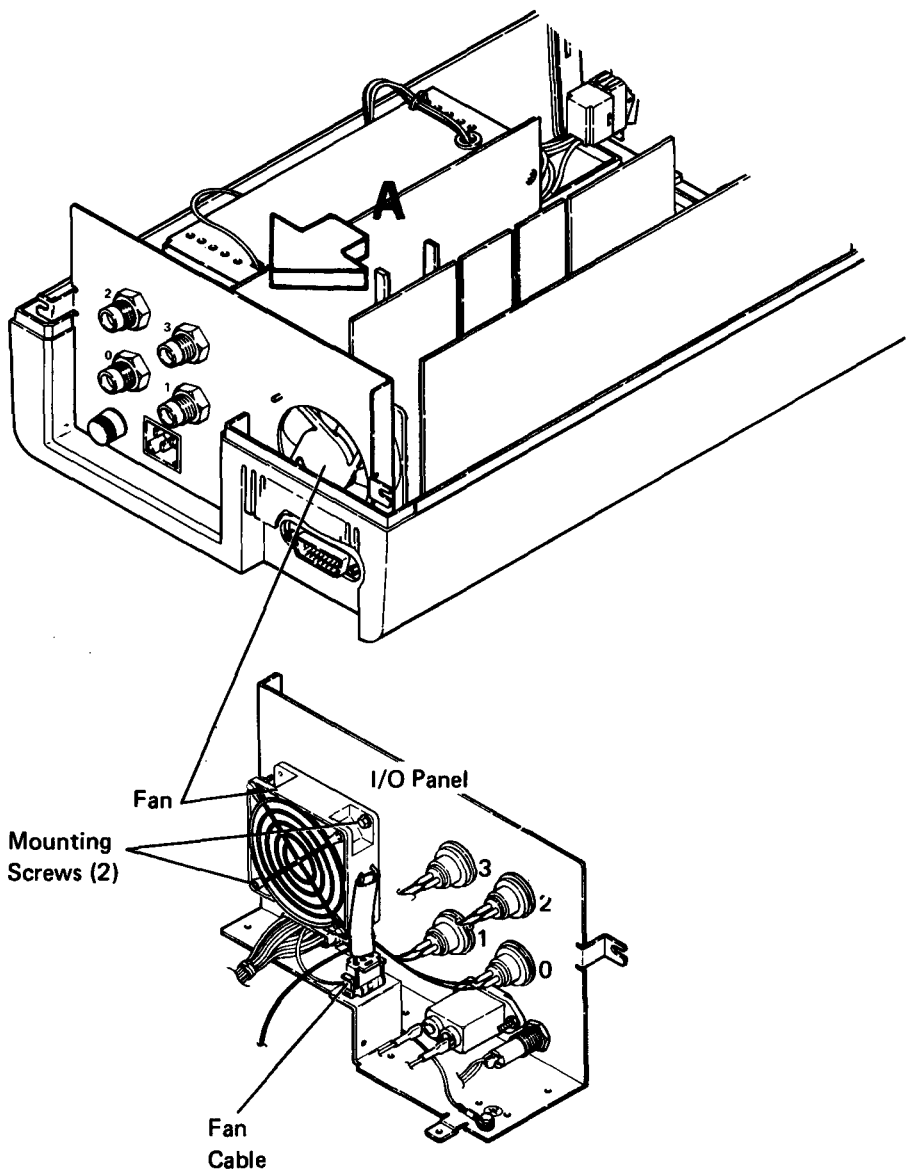

VIEW A

0260 Ground Circuits

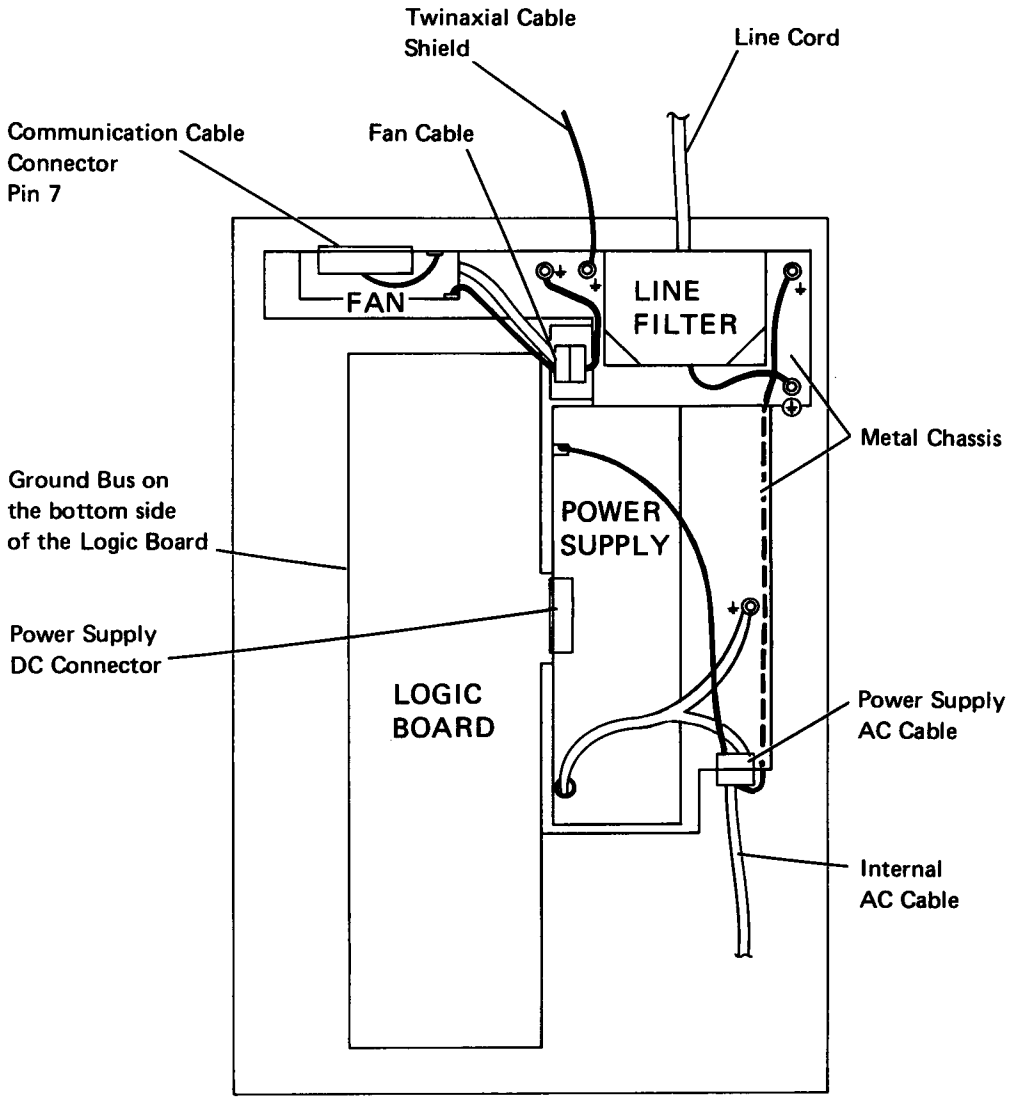

Legend:

Indicates Ground Connections

Ground

⊕ Main Ground-Safety

Control Panel (Including LEDs and Test Switch)

0320 Control Panel Wiring (Including LEDs and Switches)

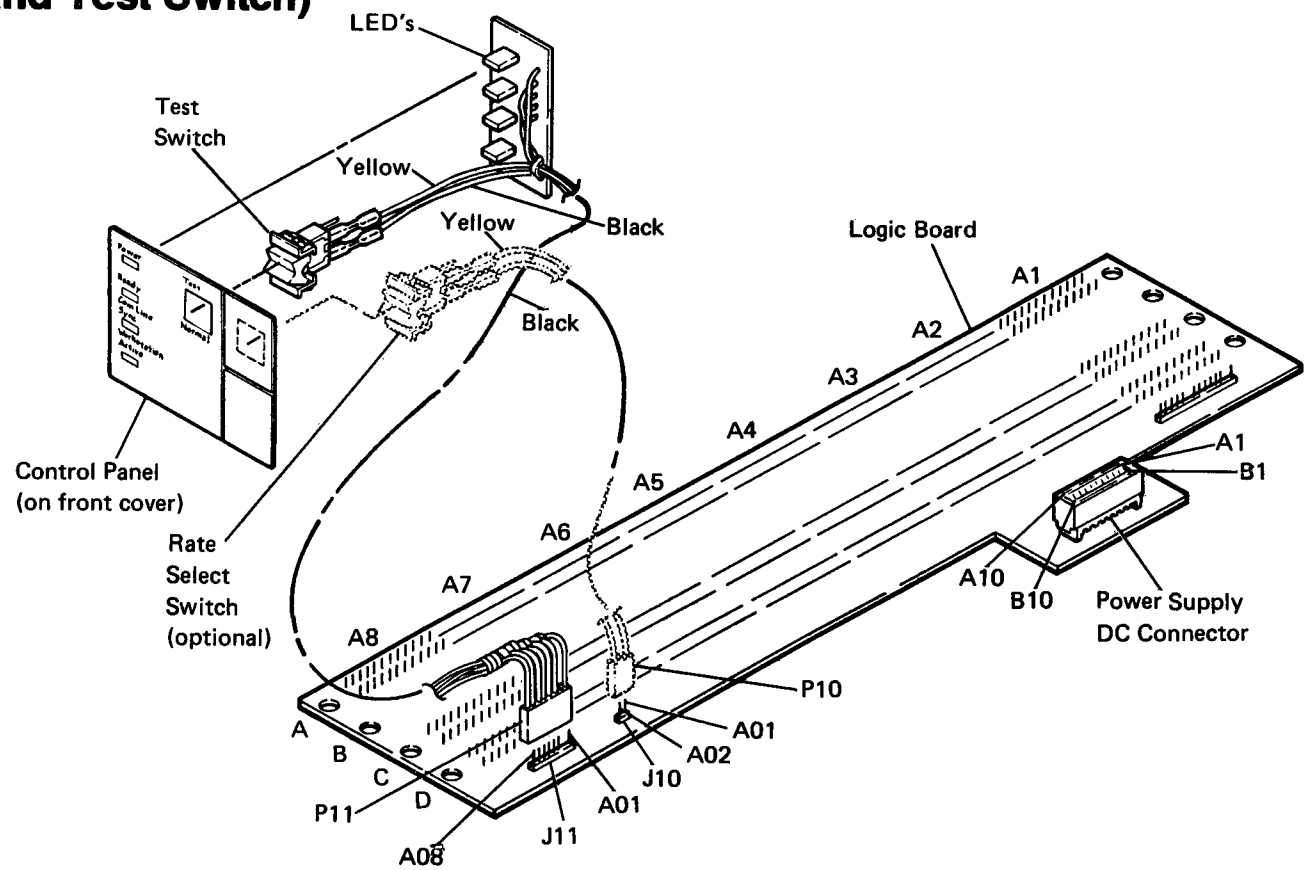

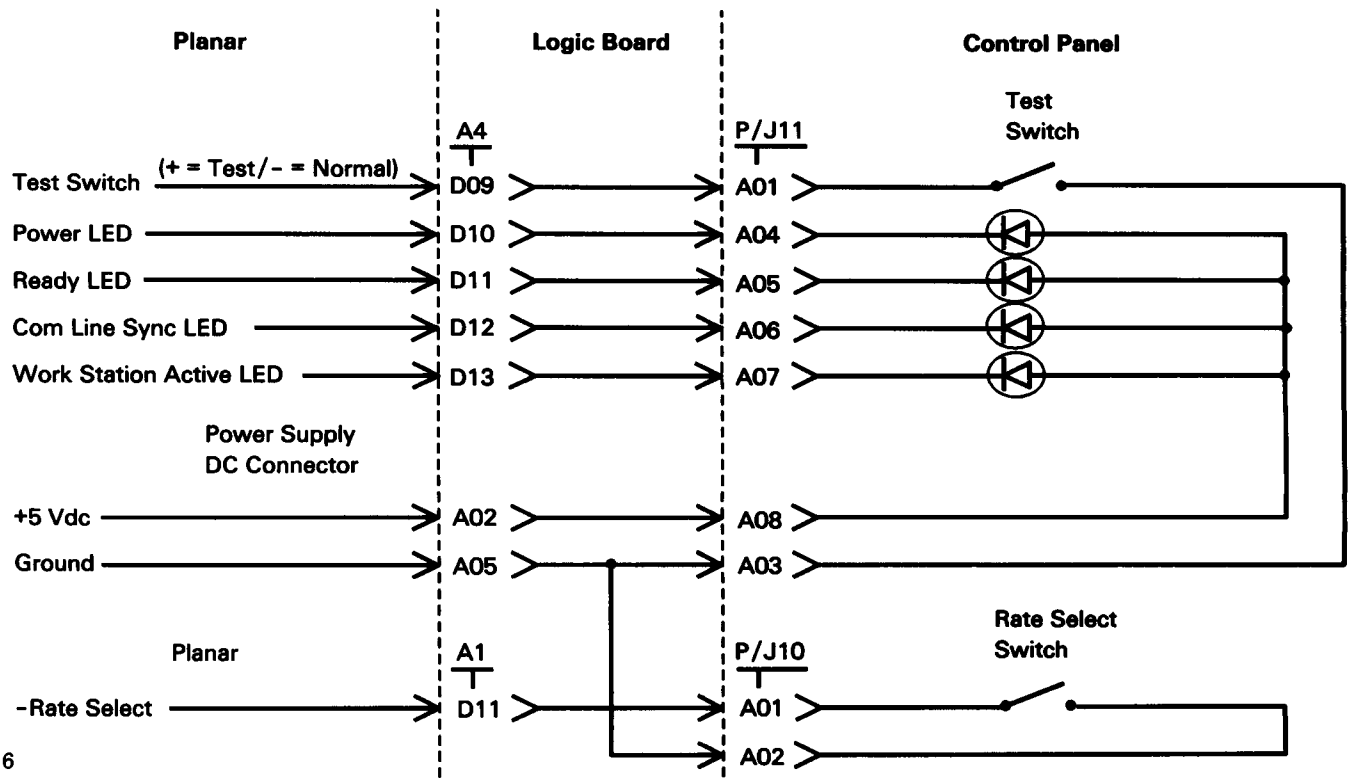

0340 LED and Cable Assembly Removal and Replacement Procedure

CAUTION
Use care when placing the LEDs into their respective holes in the control panel.

1. Power off the work station controller and remove the line cord from the AC outlet.
2. Disconnect the control panel cable from J11.
3. Disconnect the two wires from the rear of the test switch.
4. Remove the LED and cable assembly from the brackets.
5. Remove the control panel nameplate by releasing the four tabs on the rear of the plate. This will make replacement of the LED and cable assembly easier.

Replace the LED and cable assembly in the reverse order of removal.

0341 Switch Removal and Replacement Procedures

CAUTION
When replacing the nameplate, ensure that the LEDs are properly aligned.

1. Power off the work station controller and remove the line cord from the AC outlet.
2. Disconnect the two wires from the rear of the switch.
3. Remove the control panel nameplate by releasing the four tabs on the rear of the plate.
4. Remove the switch by pushing the switch out the front of the control panel.

Replace the switch in the reverse order of removal.

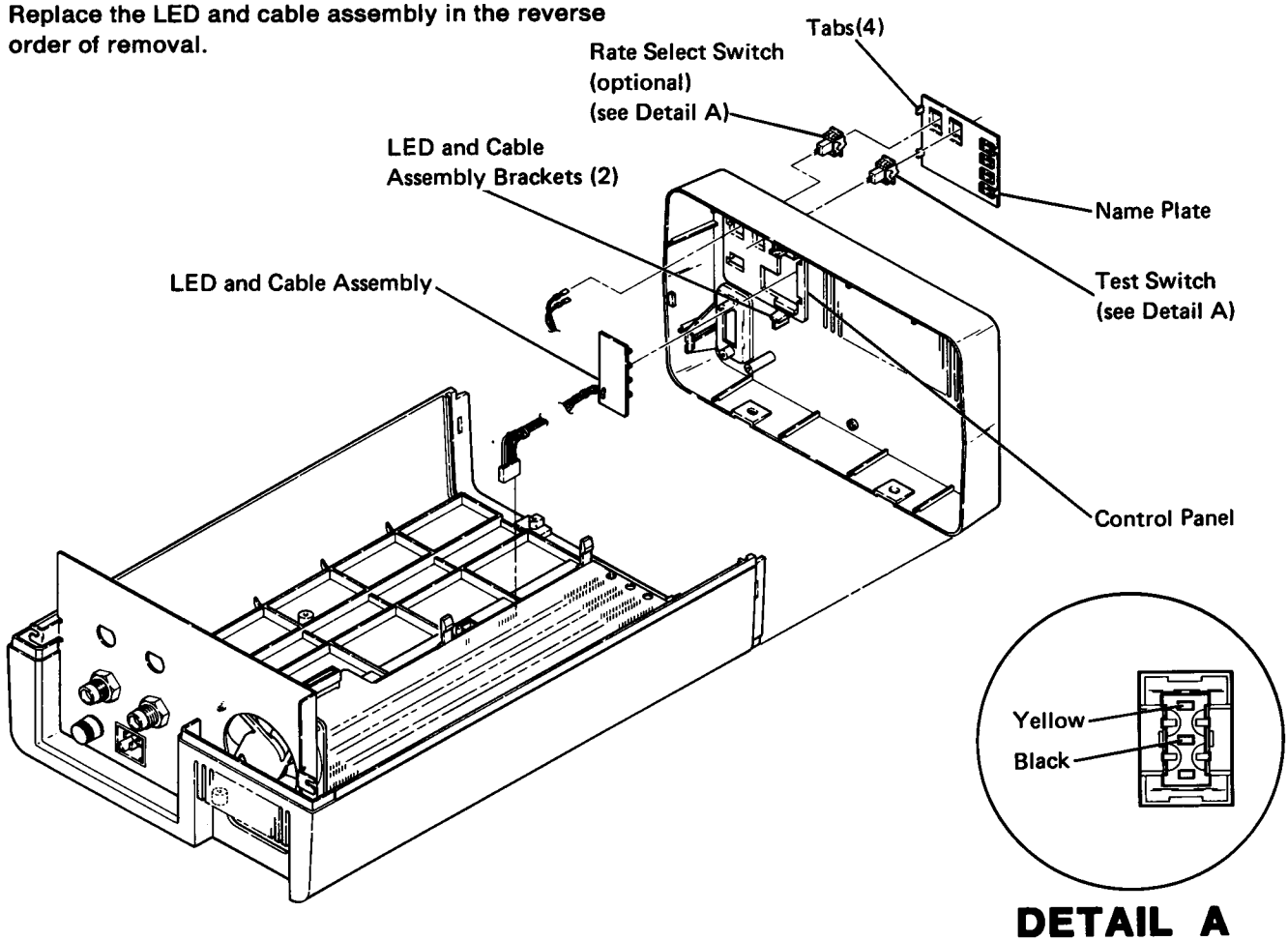

0360 LEDs and Switch Descriptions

LEDs Description

The functions of the four LEDs on the control panel follow:

Power: The on condition of this LED indicates that all DC voltages are present and are within ±20 percent of the nominal voltage.

Ready: The on condition of this LED indicates that the power-on diagnostics have successfully completed and that the work station controller is ready for operation.

The off condition indicates that either the power-on diagnostics failed or that a failure occurred while in normal operation (see the failure indication chart).

Com Line Sync: The on condition of this LED indicates that flags are being received from the communication line. This LED will be blinking during normal operation as the LED is on for approximately 150 milliseconds then off for approximately 150 milliseconds while flags are being detected.

Workstation Active (WSA): The meaning of this LED is dependent on the state of the Ready LED. If the Ready LED is on, the on condition of the WSA LED indicates that one or more work stations are attached, are powered on, and are responding to polling. If the Ready LED and/or the Workstation Active LED are off, use the chart below.

Failure Indication Chart

Power LED	Ready LED	Com Line Sync LED	Workstation Active LED	Failing FRU
Off	N/A	N/A	N/A	Power Supply
On	Off	N/A	Off	Planar
On	Off	N/A	On	Drvr/Rcvr Card, Planar[1]
On	On	N/A	Off	Use MAPs for isolation
On	On	N/A	On	Base machine is probably good

[1]When cables are attached to the twinaxial ports, this error condition can also be caused by open or shorted cables, or an attached work station including a cable that is attached but not terminated.

Test Switch Description

The test switch on the control panel is:

- A diagnostic aid for the CE/CSR
- Used for setup selection by the operator
- A problem determination aid for the operator

This switch has two settings: Test and Normal.

With the test switch in the Test position when the machine is powered on, the machine will complete the power-on diagnostics and go to customer setup mode.

With the test switch in the Normal position when the machine is powered on, and then moved to the Test position, the following is permitted:

- Selection of concurrent diagnostics (2013)
- Selection of dedicated diagnostics (2012)

  Note: Normal data communication cannot be performed when in the dedicated diagnostic mode.

Rate Select Switch Description

The rate select switch has two positions: Primary and Secondary. The Primary position allows the modem/DCE to operate at its maximum rated data transmission speed. The Secondary position, if the modem/DCE supports the rate select signal, reduces the transmission speed to one-half of the primary speed.

Note: This switch is provided only on World Trade machines with an EIA/CCITT interface adapter (see 1061).

For your convenience, a form for comments is in the back of this publication.

Planar

0410 Connector and Test Points Locations

See 0230 for power distribution.

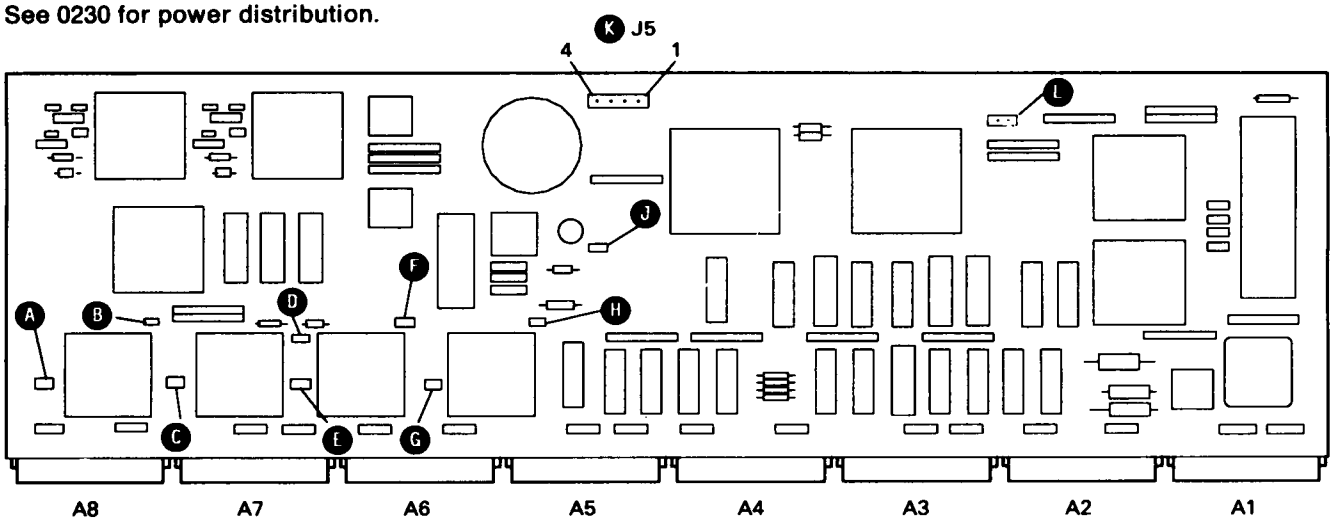

Jumper Positions A through H

These jumpers disable sections of the ROS on the planar. They must not be installed unless a patch card for the function is installed in logic board sockets C7, D5, and/or D7. Some jumper positions are not present on all machines.

- **A** Reserved.
- **B** World Trade Translate.
  If this jumper position is present, install a jumper when a translate card is installed in logic board socket C7.
- **C** Work Station Manager (E: 8000 to BFFF). See Note 2.
- **D** Work Station Manager (E: C000 to FFFF). See Note 2.
- **E** Data Stream Manager (F: 0000 to 3FFF). See Note 3.
- **F** Customer Setup and Data Stream Manager (F: 4000 to 7FFF).
- **G** SNA-SDLC (F: 8000 to BFFF).
- **H** Diagnostics (F: C000 to FFFF).
- **J** Used for manufacturing test only. Must be left on.
- **K** J5

  Pins 1 and 2: Jumper is installed for power-on diagnostics loop test.

  Pins 3 and 4: Jumper is installed for twinaxial continuous transmit test.
- **L** Present for X.21 Planars only. Jumper must be installed when the X.21 Switched Support feature ROS is installed.

Notes:

1. When a jumper is installed at positions D, E, F, G, and/or H, the planar ROS for the hexadecimal address range (in parentheses) for that position is disabled.
2. The Enhanced Keyboard feature or the Model S01 requires that jumpers be installed at positions C and D.
3. The Extended Function A for the Models K01 or S01 feature requires a jumper at position E.

0440 Planar Removal and Replacement Procedure

Note: Attempt to read the customer configuration (0460) before removing the planar and record the data shown in fields 1 through 8.

1. Power off the work station controller and remove the line cord from the AC outlet.

2. Remove the planar as follows:

   a. Use a flat-blade screwdriver and turn the screw-type extractors at both ends of the planar in a clockwise direction. This will loosen the planar from the logic board.
   b. Lift the planar off the logic board.

3. If the new planar does not have a plastic stiffener on it, remove the stiffener from the old planar and install it on the new planar.

4. Replace the planar in the reverse order of removal.

5. Enter the configuration (0460).

Note: When replacing the planar, check for patch cards installed in sockets C5, C7, D5, and/or D7. If patch cards are installed, check the label on the cards to see if they should be removed and returned with the old planar.

The Enhanced Keyboard feature requires that jumpers be installed. (See 0410)

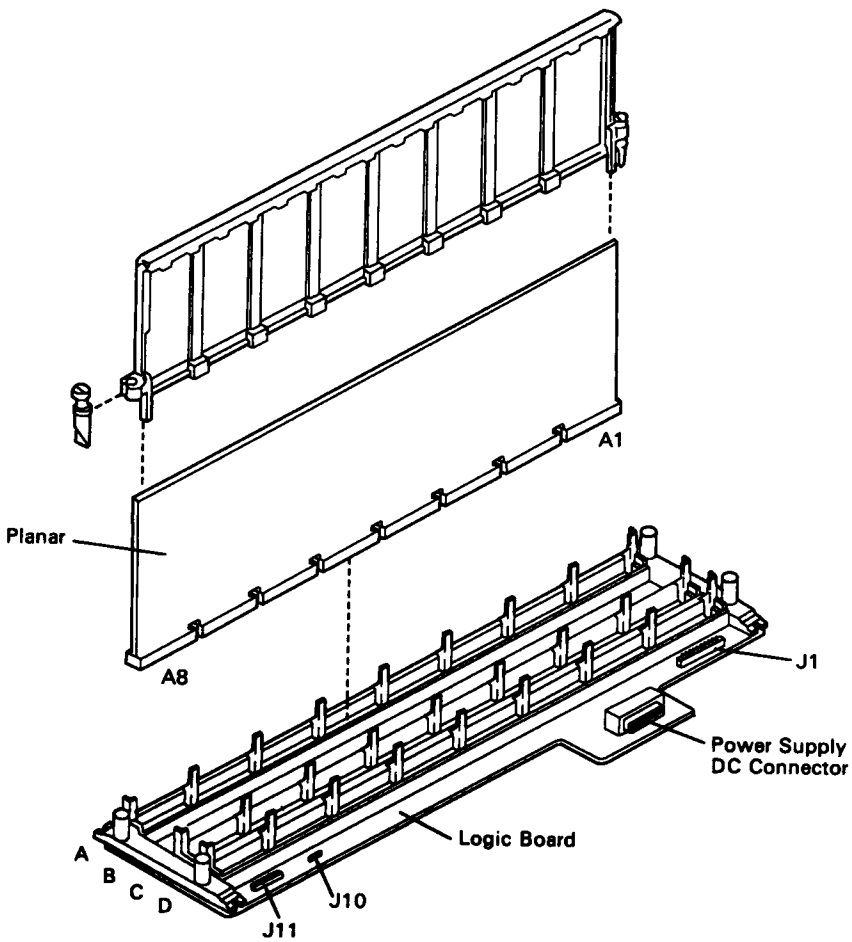

0460 Work Station Controller Configuration Procedures

The following procedure is common for both the SDLC, X.25, and X.21 machines.

Use this procedure to enter configuration data after replacing the planar.

CAUTION
When you perform the following procedure, all sessions are destroyed if they are not terminated on the work station controller and on all attached work stations.

The customer configuration record for the work station controller can be displayed on any attached display station by the following procedure.

Note: Attempt to read the customer configuration before removing the planar and record the data shown in fields 1 through 8.

1. Ensure that all attached work stations are powered on and ready.

   Note: Any work station that is not powered on and ready when configuration is done will not be included in the configuration record. That work station cannot be used until another configuration is done to include it.

2. Power off the work station controller.
3. Set the test switch on the work station controller to Test.
4. Power on the work station controller. Wait for the power-on diagnostics to complete (the Ready LED should come on).
5. Go to any attached display station and reset any error condition displayed.
6. At the display station, perform one of the following steps:

   a. If your display station is a 5251, 5291, or a 5292, press the Cmd key and the test request key
   b. If your display station is a 3179, a 3180, or a 3196, press and hold the Alt key while pressing the Test key.
   c. If your keyboard is different from those in steps a and b, refer to section 2003.

7. The configuration screen should be displayed now.

   - If the bottom line of the display screen looks similar to Figure 1-1, go to 0460.1.
   - If the bottom line of the display screen looks similar to Figure 1-2, go to 0460.2.
   - If the bottom line of the display screen looks similar to Figure 1-3, go to 0460.6.

```
1-> 00          2-> 01     3-> 0 1 1 0 0 0 1 1 0 1
```

Figure 1-1. SDLC Screen

```
1-> 00          2-> 01     4-> 0 2 7      5-> 1 0 0 0 0 0  0  6-> 0 0 0 0 0 0 0 0
```

Figure 1-2. X.25 Screen

```
1-> 00          2-> 03     9-> 0      A-> AAAAAAAAAAAAAAA       B-> 00 0 0
```

Figure 1-3. X.21 Switched Screen

0460.1 Configuration Procedure for SDLC

Go to 0460 to start this procedure.

See 0460.2 for X.25 configuration. See 0460.6 for X.21 switched configuration.

Typical SDLC Configuration Screen

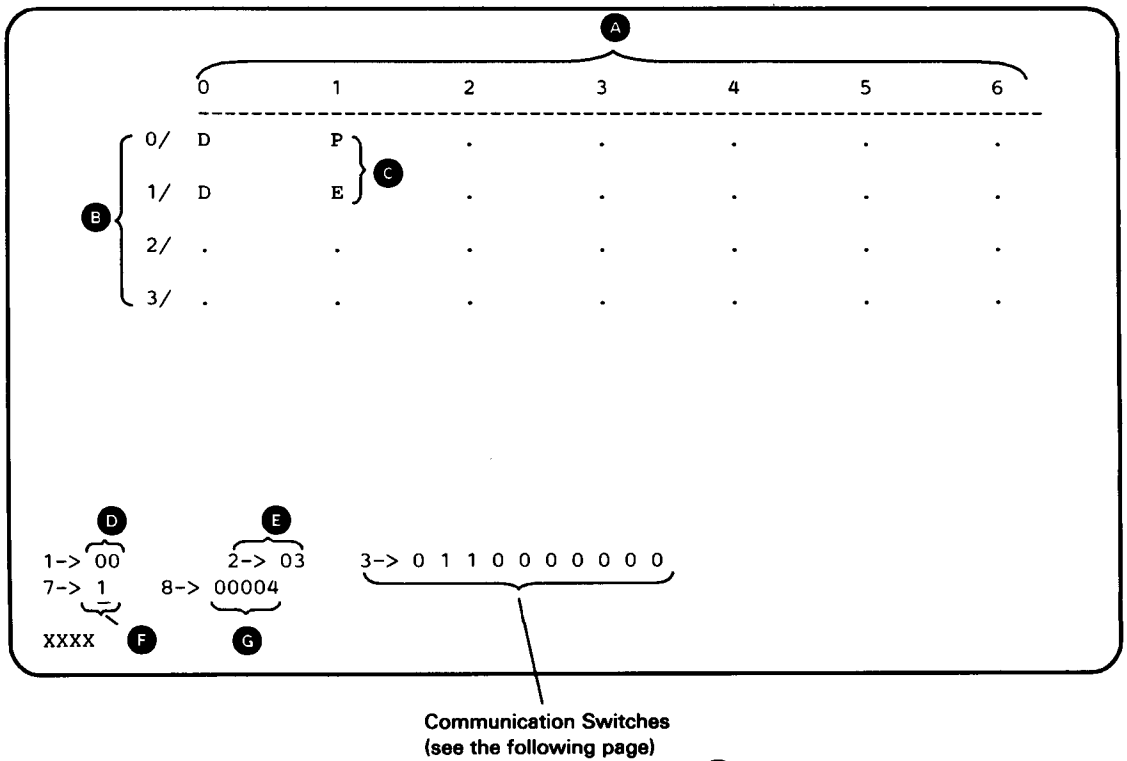

A Work Station Address (for attached work stations).

B Work Station Controller Port Number.
Ports 2 and 3 will be present for 4-port machines only.

C Attached Work Station Information

D = Display Station
P = Printer
E = Error. More work stations were found than permitted for this machine.

D Keyboard Language ID.
See the language ID codes[1] listed at 0460.3.

E Work Station Controller SDLC Station Address.
Range is 01 through FE.

F Communication Card Type (not displayed by the customer).
Range is 0 through 9, A through F. Valid entries are:

1 = EIA
2 = XLCA
4 = DDSA
(See 1064 for card identification.)

G Machine Serial Number.
Range is 0 through 9, A through F.

XXXX Error Code (see reference 2100 for descriptions).

---

1 Always 00 for US/Canada standard and cannot be changed. It may be changed for World Trade (multinational) machines only.

Communication Configuration (Default is 0)

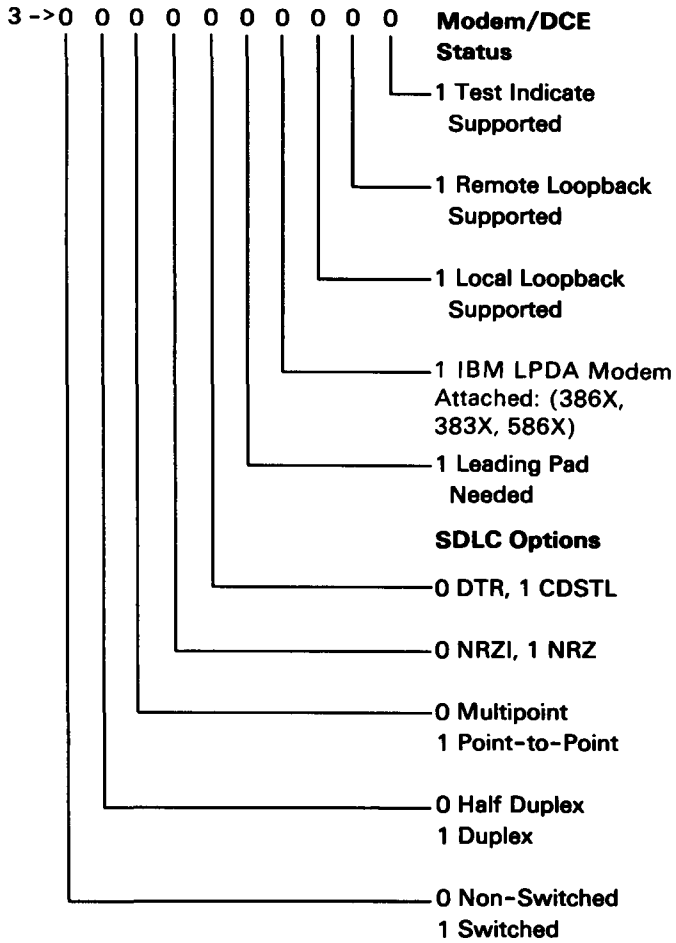

Note: See 0460.4 for more detailed descriptions.

Work stations are automatically entered into the configuration by the work station controller. The work station controller senses which work stations are powered on and are in the ready condition. Only those work stations that are in the ready condition are displayed on the configuration screen. Before entering a configuration, which you will be asked to do later on in this procedure, always ensure that the displayed work stations match the configuration on the IBM 5294 Control Unit Setup Form (0460.5).

The only keys permitted during configuration are the cursor up and down and cursor right and left movement keys. The cursor up and down movement keys are used to change the values in a field. The cursor right and left movement keys are used to move the cursor to the desired field.

When the configuration screen is first displayed, the cursor will be located in field 1.

1. Enter the language ID in field 1. Skip this step for US/Canada (English). See 0460.3 for a list of the language IDs and entry procedure.
2. Move the cursor to field 2.
3. Enter the work station controller address.
4. Move to field 3.
5. Enter the communication switch configuration. See the IBM 5294 Control Unit Setup Form or ask the customer for this information.
6. If your display station is a 5251, 5291, 5292, or 5551, press the Cmd and cursor right movement keys.
7. If your display station is a 3179, a 3180, or a 3196, press and hold the Alt key and press the cursor right movement key.

   If your keyboard is different from the keyboards in steps 6 and 7, refer to section 2003.
8. Fields 7 and 8 should now appear.
9. Enter the communication card type in field 7.
10. Move the cursor to field 8.
11. Enter the serial number of the work station controller.
12. Press the Enter key **twice**.

    Note: If an error occurs after pressing the Enter key once in step 12, see the error code descriptions (2100) and take the necessary corrective action.

0460.2 Configuration Procedure for X.25

Go to 0460 to start this procedure.

See 0460.1 for SDLC configuration.

Typical X.25 Configuration Screen

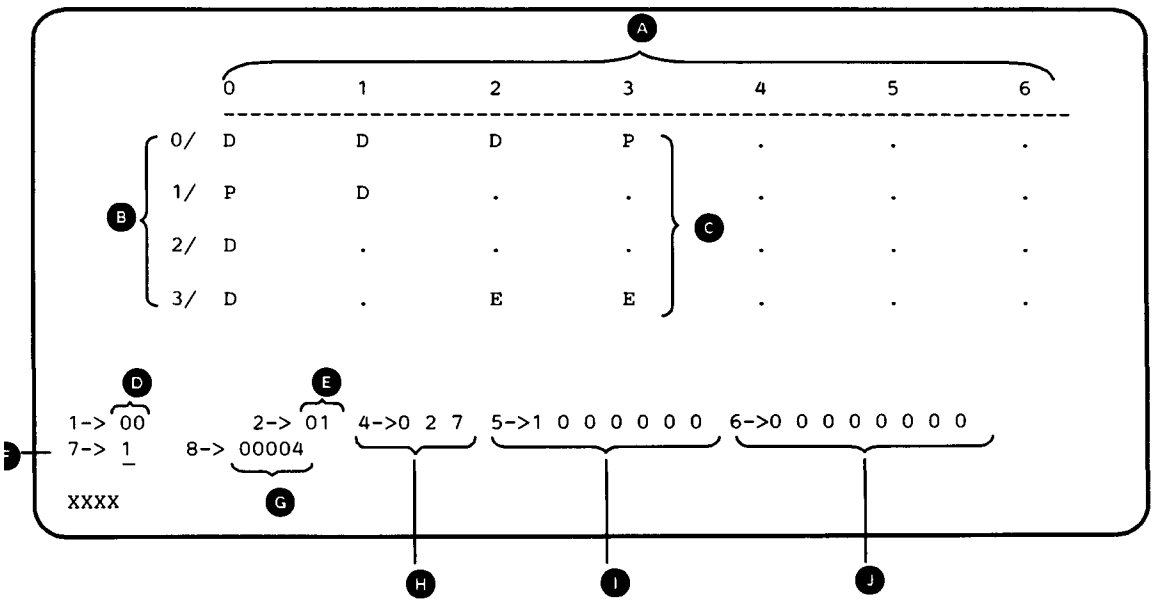

A Work Station Address (attached work stations).

B Work Station Controller Port Number.
Ports 2 and 3 will be present for 4-port machines only.

C Attached Work Station Information

D = Display station
P = Printer
E = Error. More work stations were found than permitted for this machine.

D Keyboard Language ID.
See the language ID codes[2] listed at 0460.3.

E Work Station Controller X.25 Station Address.
Range is 01 through FE.

F Communication Card Type.

1 = EIA
2 = XLCA
4 = DDSA
(See 1064 for card identification.)

G Machine Serial Number.
Range is 0 through 9, A through F.

H **(Field 4)**

0 2 7

- Link Window Size
  (1 through 7 valid.
  Default = 7)
- Packet Window Size
  (2 through 7 valid for Modulo 8;
  2 through 9 valid for Modulo 128.
  Default=2)
- 0 Modulo 8
  1 Modulo 128
  (Default = 0)

Note: Fields 4, 5, and 6 are not displayed unless the X.25 feature is installed.

---

2 Always 00 for US/Canada standard and cannot be changed. It may be changed for World Trade (multinational) machines.

(I) **(Field 5)**

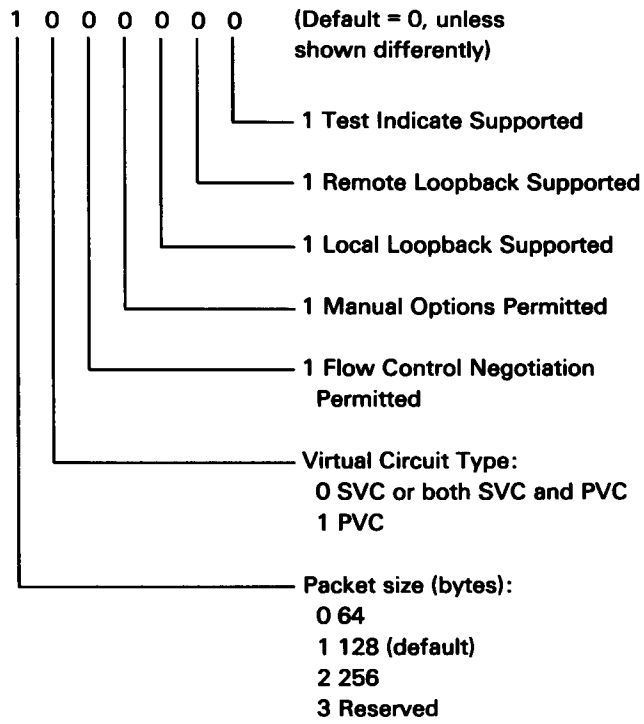

(J) **(Field 6)**

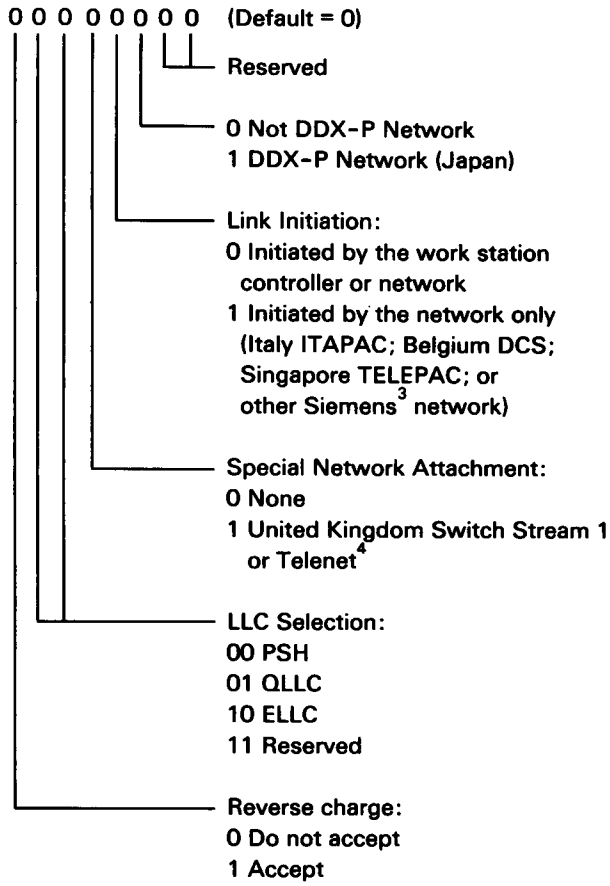

XXXX Error Code (see reference 2120 for descriptions).

---

3 Siemens, a trademark of the Siemens Corp.

4 Telenet, a trademark of the Telenet Communications Corp.

For your convenience, a form for comments is in the back of this publication.

Procedure for Entering X.25 Configuration Data

Work stations are automatically entered into the configuration by the work station controller. The work station controller senses which work stations are powered on and are in the ready condition. Only those work stations that are in the ready condition are displayed on the configuration screen. Before entering a configuration, which you will be asked to do later on in this procedure, always ensure that the displayed work stations match the configuration on the IBM 5294 Control Unit Setup Form (0460.5).

The only keys permitted during configuration are the cursor up and down and cursor right and left movement keys. The cursor up and down movement keys are used to change the values in a field. The cursor right and left movement keys are used to move the cursor to the desired field.

When the configuration screen is first displayed, the cursor will be located in field 1.

1. Enter the language ID in field 1. Skip this step for US/Canada (English). See 0460.3 for a list of the language IDs and entry procedure.

2. Move the cursor to field 2.

3. Enter the work station controller address.

4. Move to field 3.

5. Enter the communication switch configuration. See the IBM 5294 Control Unit Setup Form or ask the customer for this information.

6. If your display station is a 5251, 5291, 5292, or 5551, press the Cmd and cursor right movement keys.

7. If your display station is a 3179, a 3180, or a 3196, press and hold the Alt key and press the cursor right movement key. If your keyboard is different from the keyboards in steps 6 and 7, refer to section 2003.

8. Fields 7 and 8 should now appear.

9. Enter the communication card type in field 7.

10. Move the cursor to field 8.

11. Enter the serial number of the work station controller.

12. Press the Enter key **twice**.

    Note: If an error occurs after pressing the Enter key once in step 12, see the error code descriptions in the *Systems Reference Codes* section and take the necessary corrective action.

0460.3 Language ID Code Description

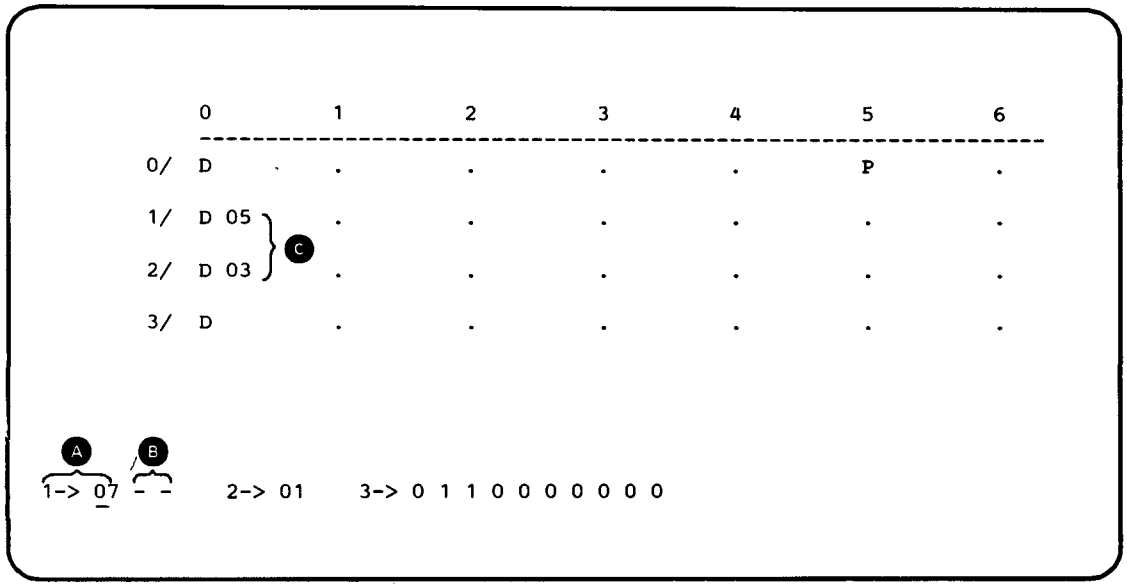

A **For Model 1 machines only**

00	US/Canada Standard	10	Italy	20	Brazil
01	Japan Katakana	11	Italy Universal	21	Brazil Universal
02	Japan English	12	United Kingdom	22	Austria/Germany
03	Japan Universal	13	United Kingdom Universal	23	Austria/Germany Universal
04	France Azerty	14	International	24	US/Canada Universal
05	France Azerty Universal	15	International Universal	25	Mixed Swiss/French
06	Belgium	16	Norway	26	Mixed Swiss/French Universal
07	Belgium Universal	17	Norway Universal	27	Mixed Swiss/Germany
08	Canada (French)	18	Portugal	28	Mixed Swiss/Germany Universal
09	Canada Universal	19	Portugal Universal	29	Swiss/French
0A	Denmark	1A	France Qwerty	2A	Swiss/French Universal
0B	Denmark Universal	1B	France Qwerty Universal	2B	Swiss/Germany
0C	Finland	1C	Spain	2C	Swiss/Germany Universal
0D	Finland Universal	1D	Spain Universal	2D	ASCII
0E	Spanish Speaking	1E	Sweden	2E	ASCII Universal
0F	Spanish Speaking Universal	1F	Sweden Universal		

A **For Model K01 (ideographic) machines only**

00	Kanji	02	Japanese English
01	Katakana	03	Japanese English (multinational)

04 through 2A are not used

A **For Model S01 machines only**

00 all attached to S01

Notes:

1. Codes 25 through 28 are used with all Models of 5251, 5291, and 5292 with French or German keyboards and a mix of keyboards including a mix of 3179 Model 2, 3180 Model 2, and/or 3196 Swiss/French or Swiss/German keyboards with any of the keyboards coded 00 through 24.
2. Codes 29 through 2C are used with 5291, 3179 Model 2, 3180 Model 2, and/or 3196, with Swiss/French or Swiss/German keyboards.
3. When a 5551 is attached, the language ID code is read from the 5551 and used in place of the code in the configuration record.
4. Codes 20 and 21 are for Brazil, except when the Enhanced Keyboard feature is installed. Then, codes 20 and 21 are for the Netherlands.

Entering Language ID Codes for Single and Multiple Language Sites

The keyboard language ID code is entered in field 1 Ⓐ by using the cursor up or down movement keys to change the code to the desired value. When a Universal code is displayed, two dashes (--) Ⓑ will be shown. If all attached display stations use the same keyboard language ID, only one entry is needed, and the dashes can be ignored.

When using the Universal language ID codes, each display station keyboard language ID can be defined separately, permitting multiple languages to be used at one site.

Entering Single Language ID Codes

1. Enter into field 1 Ⓐ the language ID code used by the attached display stations. If a field of dashes (--) appear to the right of field 1 Ⓑ, ignore them. This field will be used at sites where the attached display stations have different language ID codes (see Entering Multiple Language ID Codes).
2. Enter the remainder of the configuration data.
3. Press Enter **twice**.

Entering Multiple Language ID Codes

To enter the language ID code for display stations having different language IDs, do the following:

1. Enter into field 1 Ⓐ the Universal language ID code (Model 1) or language ID code (Model K01) used by the largest number of attached display stations. No entry should be made in the field of dashes Ⓑ.
2. Press Enter **twice**.
3. Position the cursor back to field 1 Ⓐ.
4. Change field 1 to the Universal language ID code (Model 1) or language ID code (Model K01) of one of the display stations with a different language ID.
5. Move the cursor to the first dash (-) position in field 1 Ⓑ.
6. Enter the work station controller port number to which this display station is attached.
7. Move the cursor to the next dash (-) position in field 1.
8. Enter the work station address of this display station.
9. Press Enter **twice**.

   The keyboard language ID code will be displayed next to the D in field Ⓒ for the display station just changed.
10. Repeat steps 3 through 9 for each attached display station that has a language ID code different from the one entered in step 1.
11. Return to step 2 of either 0460.1 or 0460.2.

0460.4 Communication Configuration Description

The descriptions for communication configuration differ for both SDLC and X.25.

SDLC - Field 3

The communication bits (switches) may be displayed on line 22 of the display screen of any attached display station. A definition for each bit follows:

```
  0 0 0 0 0 0 0 0 0 0
  |                 |
Bit 1             Bit 10
```

Nonswitched or Switched (Bit 1)

This bit indicates if a switched or nonswitched communication line is being used. When a switched line is used (1, on), the DTR (data terminal ready) line will drop in order to disconnect a call and is not turned on again until the DSR (data set ready) line is turned off.

Half-Duplex or Full-Duplex (Bit 2)

This bit sets the work station controller for the type of communication facility (line) used. When set for full-duplex (1, on), a continuous CTS (clear to send) signal is permitted, and the RTS (request to send) signal is always on, if bit 3 is set to point-to-point.

Multipoint or Point-to-Point (Bit 3)

This bit is set to indicate that the work station controller is connected to a multipoint or to a point-to-point communication line to the host system. The setting is off (0) for multipoint or on (1) for point-to-point.

NRZI or NRZ (Bit 4)

This bit selects either NRZI (non-return to zero inverted) or NRZ (non-return to zero) SDLC transmission coding options. These options are used to keep the loss of synchronization between the modems to a minimum. All stations communicating with each other on a network must use the same coding option.

The initial setting of this bit is recommended to be NRZI (0, off) for the EIA interface with analog modems/DCEs and NRZ (1, on) for DDSA, XLCA, and EIA interfaces, when EIA is used with digital DCEs.

DTR or CDSTL (Bit 5)

This bit controls the protocol used between the work station controller and the modem to prepare or answer a call.

0 = off, DTR (data terminal ready). Most modems/DCEs permit the DTR line to be on if the DSR (data set ready) line is off.

1 = on, CDSTL (connect data set to line). The modem/DCE needs the CDSTL turned on when:

- The work station controller takes control of the line to make a call, or
- The work station controller responds to the RI (ring indicator) signal or DSR (data set ready) signal being on and answers a call.

Leading Pad Required (Bit 6)

This bit is set on to cause the work station controller to transmit a pad character before the leading flag of each frame of a sequence of one or more frames. The pad character is hexadecimal 00 and should be used with the NRZI mode for modems/DCEs that require a leading pad for synchronization.

IBM LPDA Modem Attached (Bit 7)

This bit is set on to indicate that an IBM LPDA modem (or a modem having the same functions) is attached. LPDA modems are: 386X and 383X.

Local Loopback (Bit 8)

This bit is set on to indicate that the attached DCE will enter local loopback mode when the Test Control 1 line is active.

Remote Loopback (Bit 9)

This bit is set on to indicate that the attached DCE can cause the remote (host system) DCE to enter remote loopback mode when the Test Control 2 line is active.

Test Indicate (Bit 10)

This bit is set on to indicate that the attached DCE will turn on the Test Indicate line when the DCE is in the test mode.

X.25 - Field 4

Modulo 8

This bit defines the maximum number of packets that could be sent without an acknowledgment, as determined by the size of the Nr/Ns fields. The maximum number of packets is equal to the modulo number minus one.

Packet Window Size

This value defines the maximum number of packets that can be sent without an acknowledgment from the network. Valid values are 2 through 7. The value to be entered is specified by the network supplier.

Link Window Size

This value defines the maximum number of I-frames that can be sent from the controller without receiving an acknowledgment from the network. Valid values are 1 through 7.

X.25 - Field 5

Packet Size

This value sets the maximum number of bytes that the controller includes in a packet. This value includes all bytes except the packet header bytes.

Virtual Circuit Type

This bit defines the type of virtual circuit used. A PVC (permanent virtual circuit) is the X.25 network equivalent of a nonswitched line. A SVC (switched virtual circuit) is the X.25 network equivalent of a switched line. A customer may use both a PVC and an SVC on the same machine but not at the same time.

Flow Control

This bit is set on if the network is providing flow control negotiation for this controller. Flow control negotiation allows packet size and packet window size to be changed at the time a call is placed when using SVC. The manual options allowed bit must also be on.

Manual Options Allowed

This bit must be set on to allow operator entry of all keyboard entered options except network address, logical channel ID, and password.

If this bit is on and the customer has only one PVC subscription, the connection is established without operator action as soon as the controller is powered on and diagnostics completed. The virtual circuit type must be set to indicate PVC only.

The following bits apply only to controllers attached to an X.25 network via an X.21 bis interface (EIA/ECITT communication card used in the controller).

Local Loopback Supported
Remote Loopback Supported
Test Indicate Supported

These bits must be set to correspond to the information received from the network supplier.

X.25 - Field 6

Reverse Charge

When this bit is set on, if the customer is using an SVC with the answer option and the reverse charging facility is included in the customers subscription, incoming calls with reversed charging will be accepted.

LLC Selection

This value determines the type of LLC (logical link control) that will be used by the controller.

Special Network Attachment

This bit sets up the controller to operate on the UK PSS X.25 network or any other X.25 network using Telenet type operation.

Link Initiation

This bit is set on when attaching to networks that require link initiation to be done by the network only.

0460.5 IBM 5294 Control Unit Setup Form

Use the configuration procedure at 0460 to enter the data from this form.

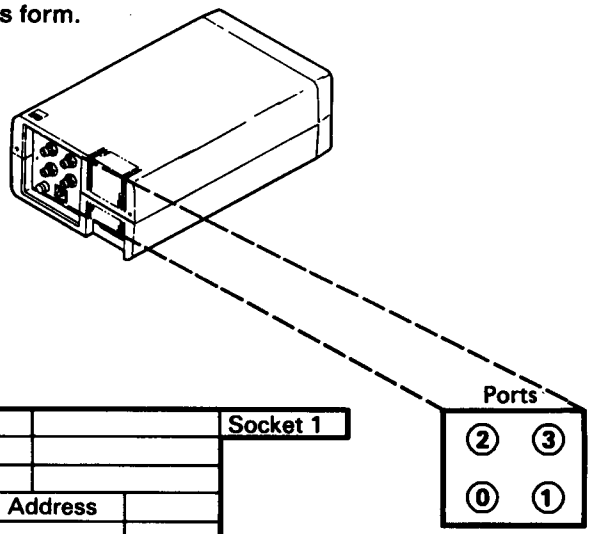

5294 Control Unit Information

Name_____
Location_____
City, State_____
Telephone_____
System Line/Port Number_____
Location_____
Telephone_____
Communications Type_____
Communications Mode [SDLC] [X.25]

CSR assistance required for communications line connection? [Yes] [No]

Name		Socket 1
Device Type		
Location		
Work Station Address		
Unit Address		
Keyboard Code		
Telephone		Socket 2

Socket 1	Name	
	Device Type	
	Location	
	Work Station Address	
	Unit Address	
	Keyboard Code	
Socket 2	Telephone	

Name		Socket 1
Device Type		
Location		
Work Station Address		
Unit Address		
Keyboard Code		
Telephone		Socket 2

Socket 1	Name	
	Device Type	
	Location	
	Work Station Address	
	Unit Address	
	Keyboard Code	
Socket 2	Telephone	

Name		Socket 1
Device Type		
Location		
Work Station Address		
Unit Address		
Keyboard Code		
Telephone		Socket 2

Socket 1	Name	
	Device Type	
	Location	
	Work Station Address	
	Unit Address	
	Keyboard Code	
Socket 2	Telephone	

Name		Socket 1
Device Type		
Location		
Work Station Address		
Unit Address		
Keyboard Code		
Telephone		Socket 2

Socket 1	Name	
	Device Type	
	Location	
	Work Station Address	
	Unit Address	
	Keyboard Code	
Socket 2	Telephone	

Note: Each cable connected to a 5294 port should have a tag with a number from 0 through 3. There should be a cable for each port used. Connect each cable to the port indicated on its tag.

0460.6 Configuration Procedure for X.21 Switched

Go to 0460 to start this procedure.

Typical X.21 Switched Configuration Screen

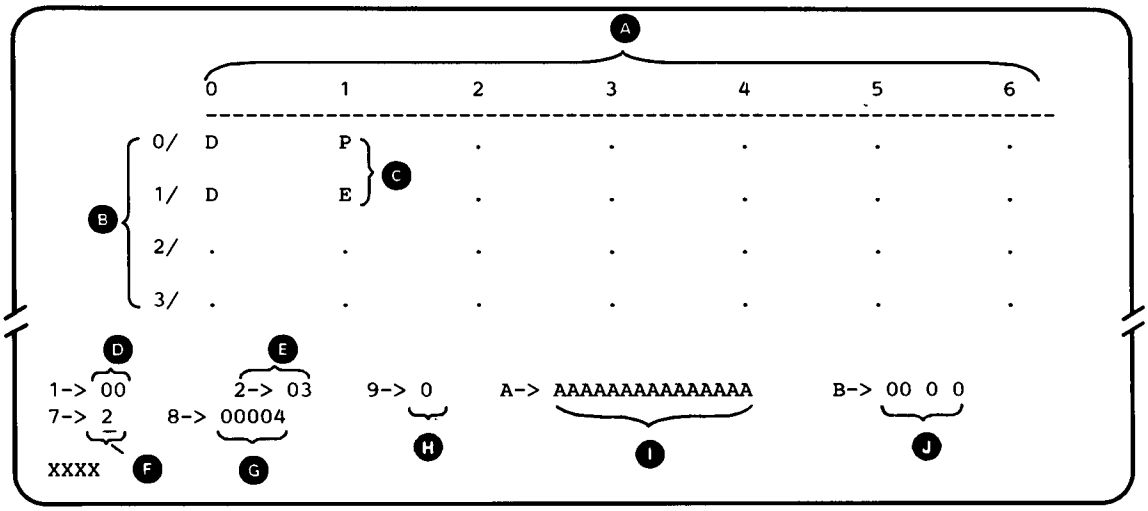

A Work Station Address (for attached work stations).

B Work Station Controller Port Number.
Ports 2 and 3 will be present for 4-port machines only.

C Attached Work Station Information

D = Display Station
P = Printer
E = Error. More work stations were found than permitted for this machine.

D Keyboard Language ID.
See the language ID codes[5] listed at 0460.3.

E Work Station Controller SDLC Station Address.
Range is 01 through FE.

F Communication Card Type (not displayed by the customer).
Range is 0 through 9, A through F. Valid entries are:

1 = EIA
2 = XLCA
4 = DDSA
(See 1064 for card identification.)

G Machine Serial Number.
Range is 0 through 9, A through F.

XXXX Error Code (see reference 2100 for descriptions).

H 0 = Not Japan network
1 = Japan network

(X.21 State 17 bypass is allowed, and SI delineated call progress signals are recognized.)

I Telephone number assigned by network or RPOA

J 00 0 0

- Direct call
  0 = XID dial digits Reconnect
  1 = Direct dial recon call
- Time delay
  X'0' - X'F'
  0 - 15 seconds
- Number of retries
  X'00' - X'FF'
  0 - 255 retries

Note: Fields 9, A, and B are not displayed unless the X.21 feature is installed.

---

5 Always 00 for US/Canada standard and cannot be changed. It may be changed for World Trade (multinational) machines only.

I/O Panel and Twinaxial Ports

0510 Locations and Wiring (Inside View)

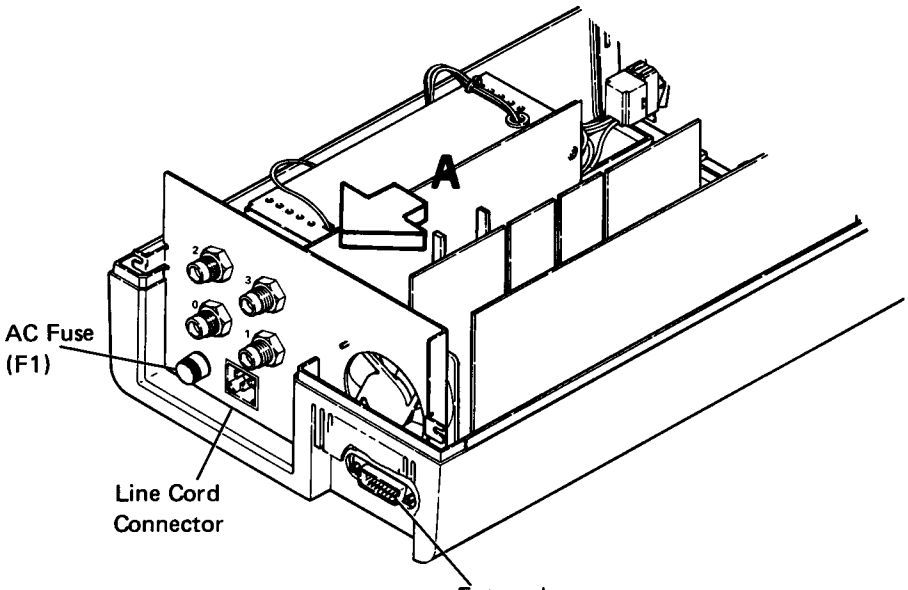

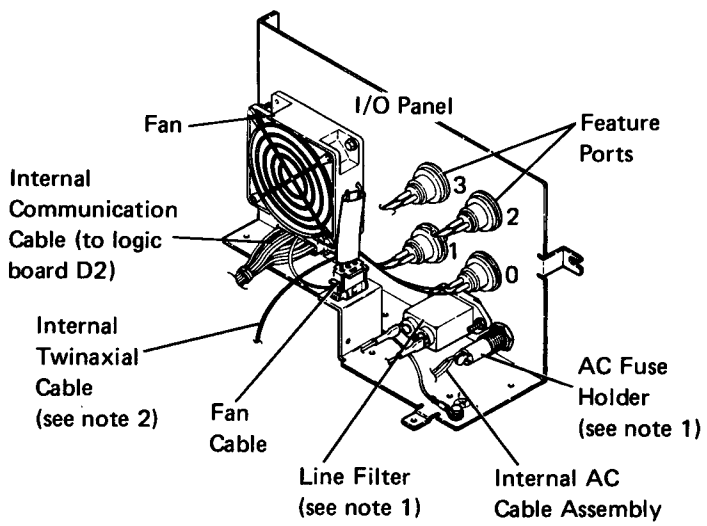

VIEW A

Notes:

1. Shown with the line filter cover removed.
2. Internal twinaxial cable (from the ports) go to J1 on the logic board.

For your convenience, a form for comments is in the back of this publication.

0520 Planar to Driver/Receiver Card to Ports Lines

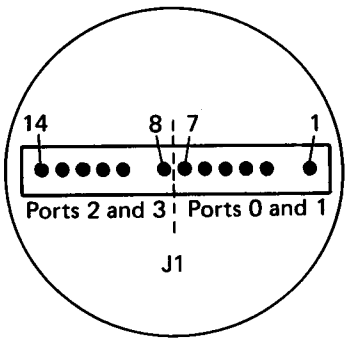

DETAIL A

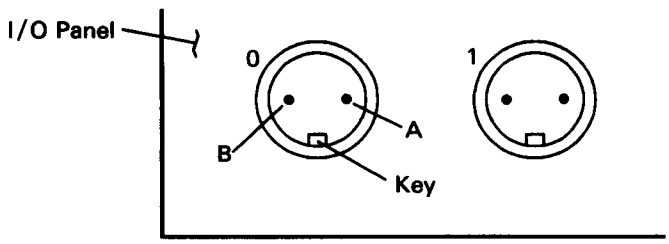

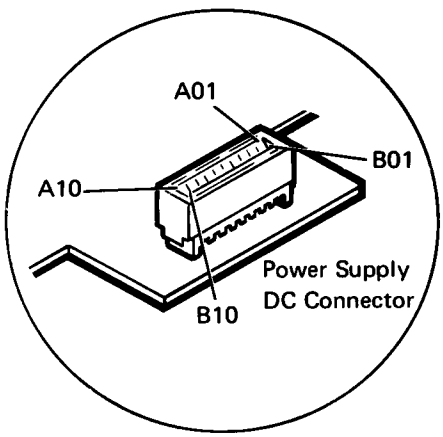

DETAIL B

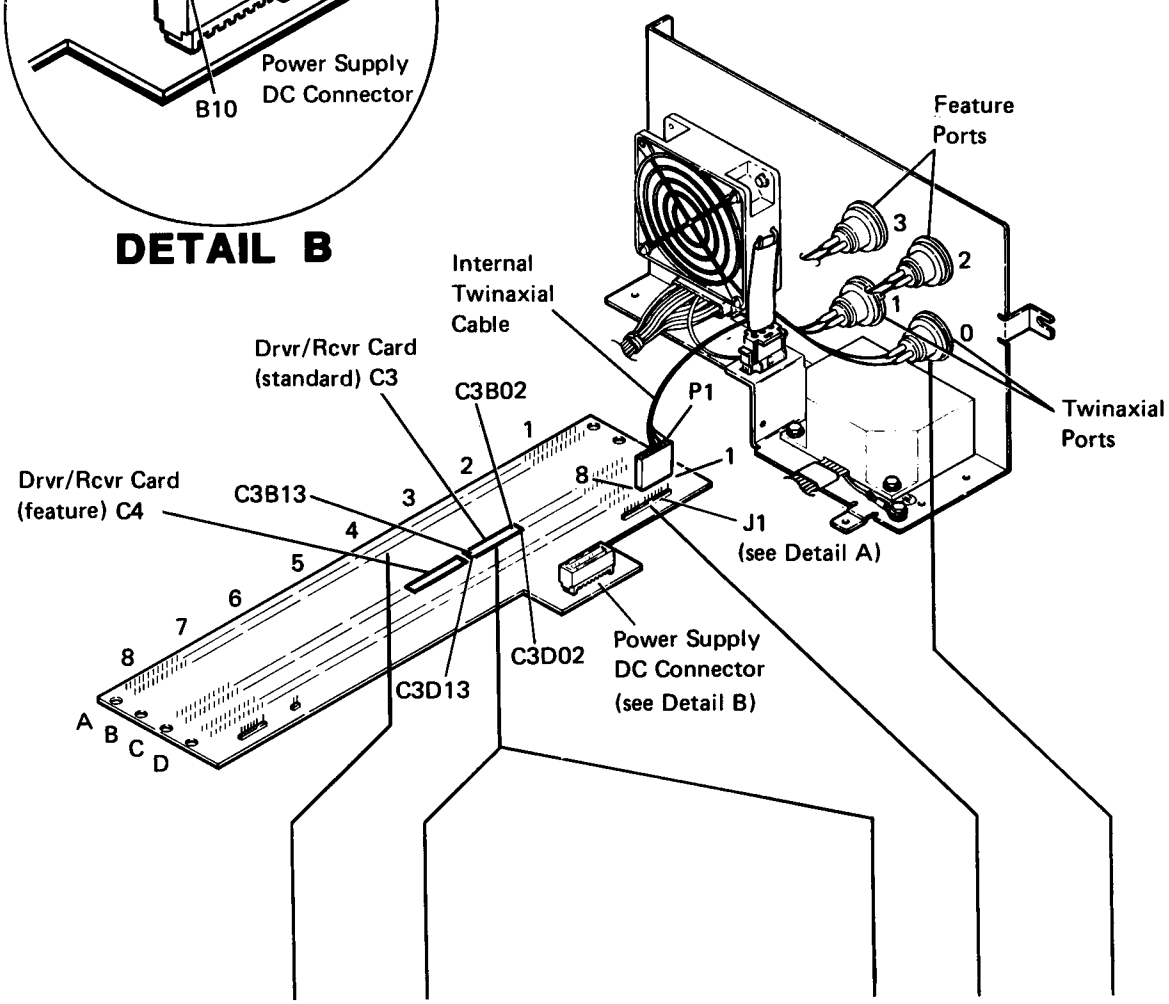

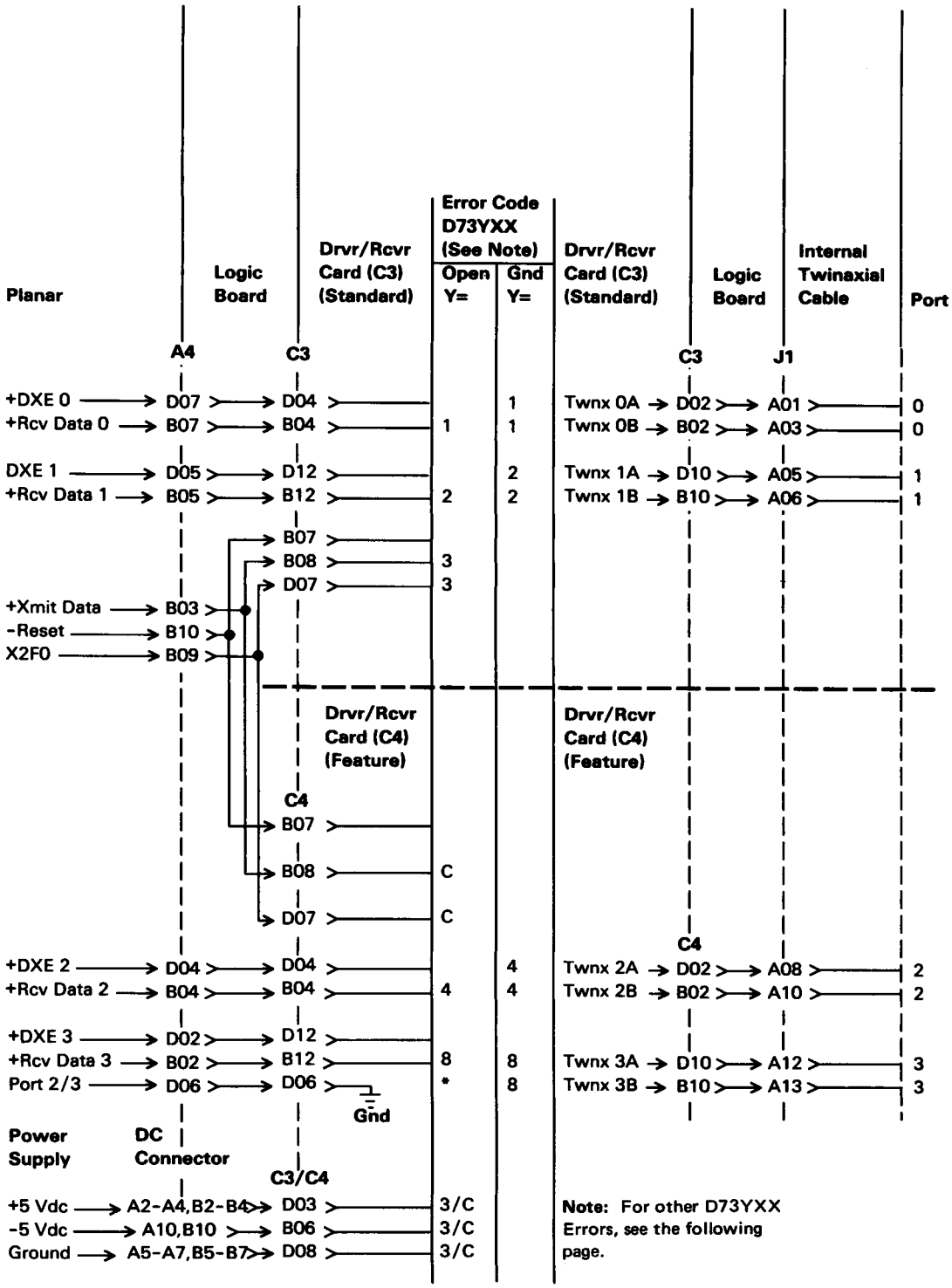

* Open ground = D770B0.

0520 (continued)

Error Codes Identifying Failing Ports, Driver/Receiver Cards, or Planar

Error Code D73YXX	Failing Ports	Failing FRU
Y=		
1	0	Driver/receiver card (C3)
2	1	Driver/receiver card (C3)
3	0 and 1	Driver/receiver card (C3)
4*	2	Driver/receiver card (C4)
5*	0 and 2	Planar
6*	1 and 2	Planar
7*	0, 1, and 2	Planar
8*	3	Driver/receiver card (C4)
9*	0 and 3	Planar
A*	1 and 3	Planar
B*	0, 1, and 3	Planar
C*	2 and 3	Driver/receiver card (C4)
D*	0, 2, and 3	Planar
E*	1, 2, and 3	Planar
F*	All	Planar
*These codes are valid for 4-port machines only.		

0540 Internal Twinaxial Cable Assembly Removal and Replacement Procedure

1. Power off the work station controller and remove the line cord from the AC outlet.
2. Disconnect the external twinaxial cables from the ports on the I/O panel.
3. Disconnect the internal twinaxial cable from J1.
4. Remove the port connectors from the I/O panel.
5. Remove the black ground wire from the I/O panel.
6. Remove the cable assembly.

Replace the twinaxial cable assembly in the reverse order of removal.

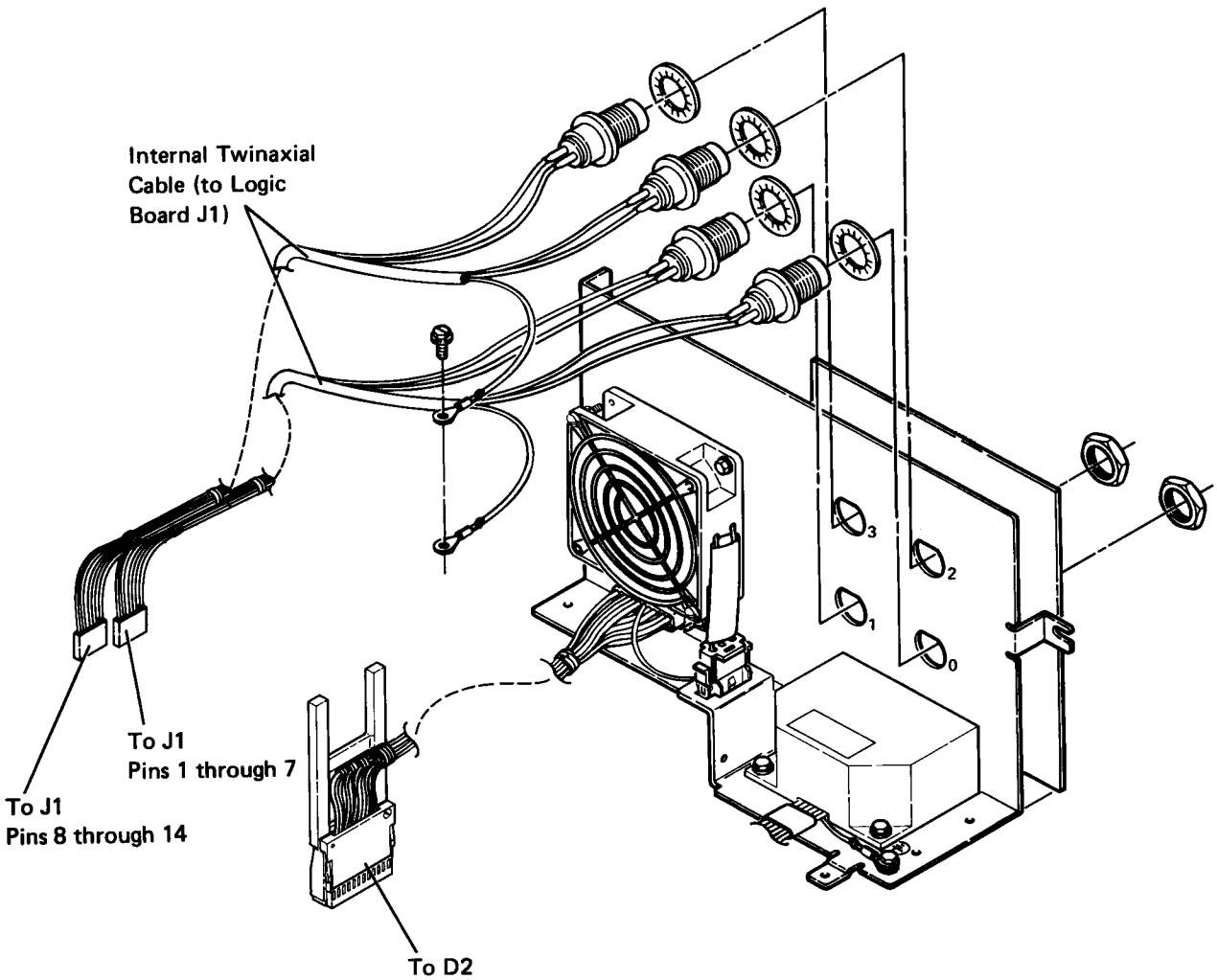

Logic Board

0610 Logic Board, Top View – Card and Connector Locations

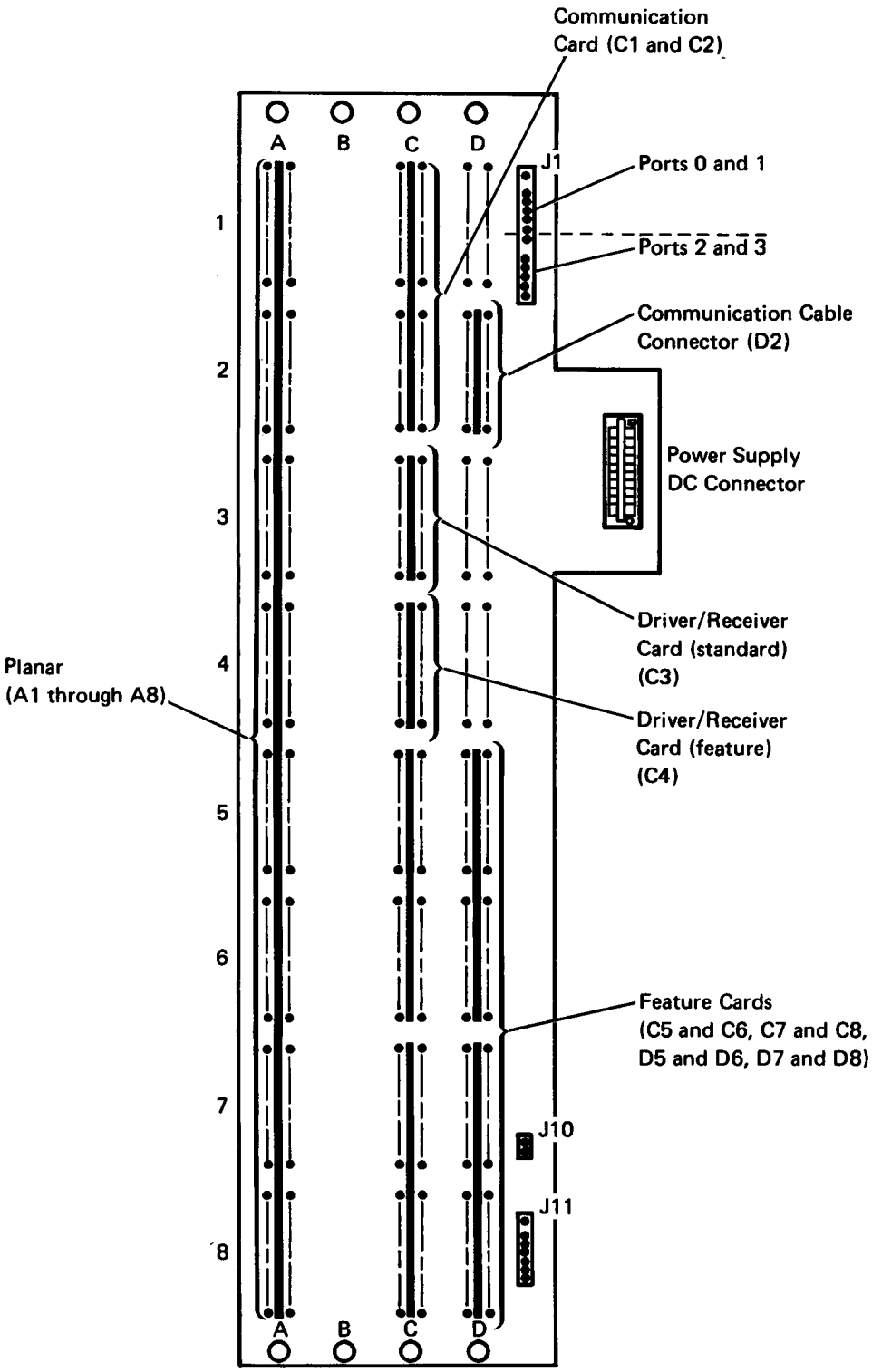

0611 Logic Board, Bottom View – Probing Locations

This is a bottom view of a logic board. To gain access to the bottom of the board, place the work station controller on its side and remove the access panel from the bottom of the machine.

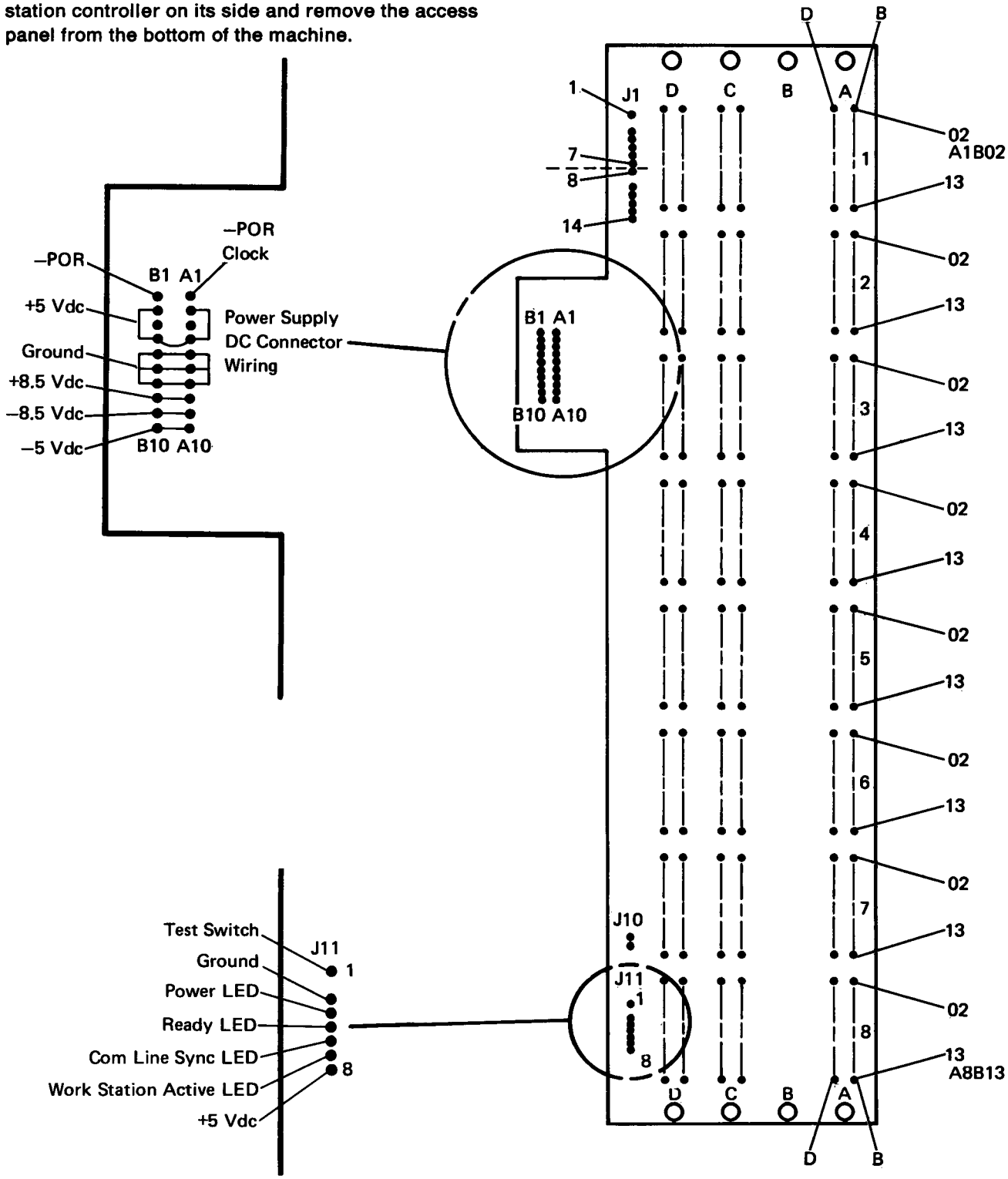

0640 Logic Board Removal and Replacement

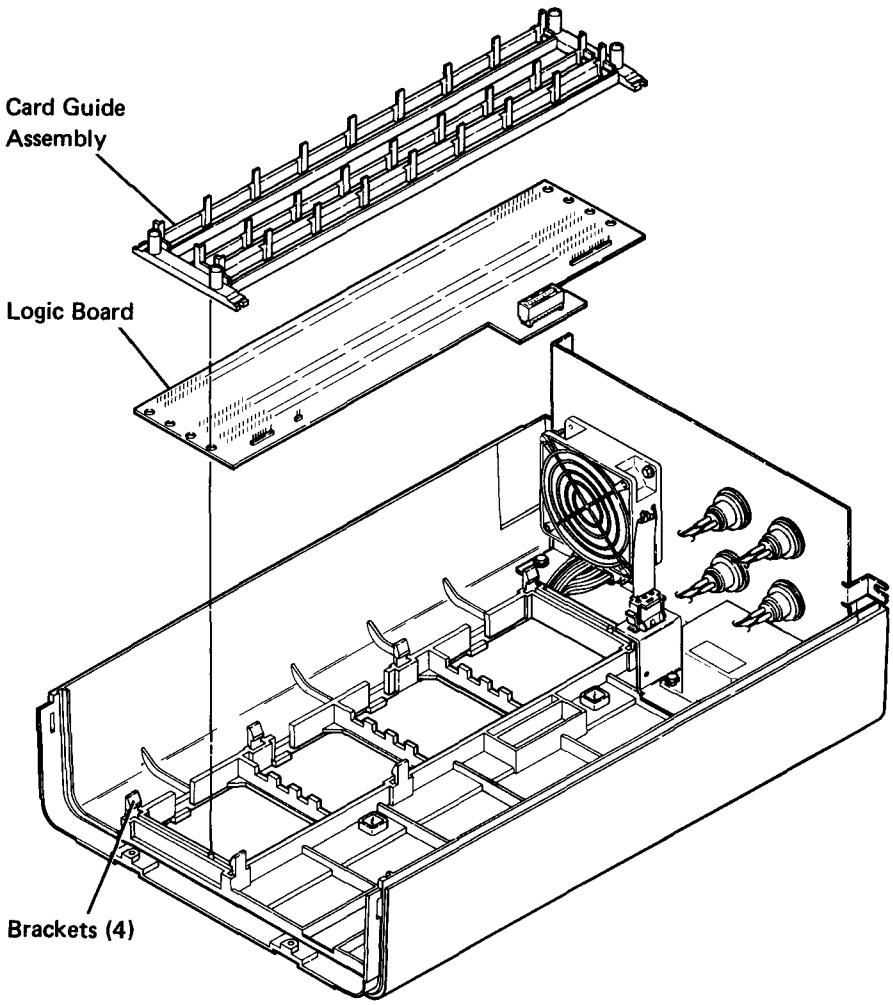

(Front cover and control panel removed for viewing only.)

1. Power off the work station controller and remove the line cord from the AC outlet.

2. Remove the power supply (0240).

3. Remove all the logic cards and planar (0440) from the logic board.

4. Disconnect all the cables from the logic board.

5. Remove the guide assembly by opening the brackets at each corner of the logic board.

6. Remove the logic board and card guide.

7. Replace the logic board in the reverse order of removal.

Note: Make sure that the logic board pins are correctly aligned to the logic cards. To ensure correct alignment, place the card guide on the logic board and insert two logic cards at opposite ends of the logic board before installing the logic board and card guide.

Feature ROS Card

Located at logic board sockets C5 and C6.

0710 Locations

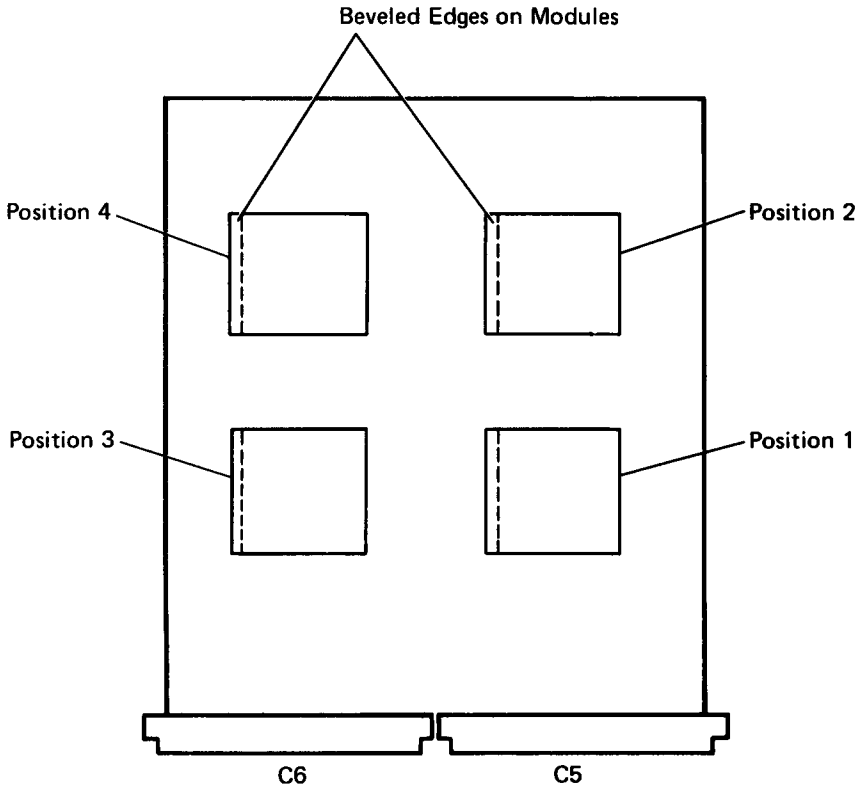

ROS Module Position Description

Card Position	Module Description
1	Expanded Function Feature or Extended Function A feature
2	X.25 Feature or X.21 Switched Support Feature
3	Text Entry Assist Feature (Module A) or Text Entry Assist "A" (Module A)
4	Text Entry Assist Feature (Module B) or Text Entry Assist "A" (Module B)

0740 Feature ROS Card Removal and Replacement

1. Power off the work station controller and remove the line cord from the AC outlet.

2. Remove the ROS card from the logic board, C5.

3. If you want only to replace a defective module, remove and replace the defective module (0741) and go to step 4.

   If you want to replace the ROS card, remove all the modules (0741) on the defective card and install them in the same respective location on the new card.

4. Replace the ROS card.

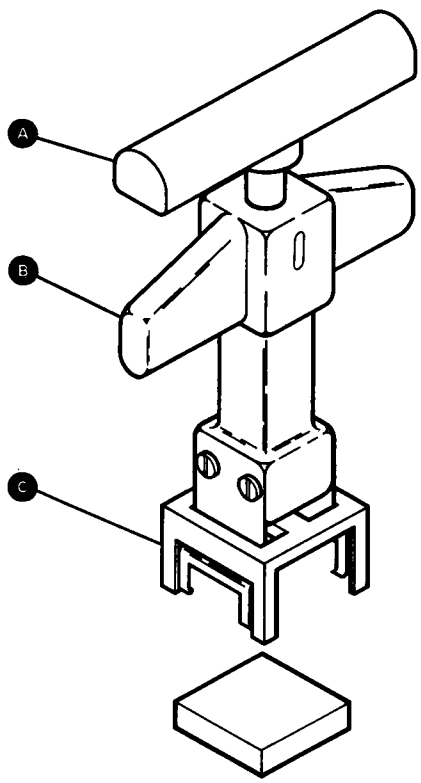

0741 Feature ROS Module Removal and Replacement Procedure

CAUTION
Do not touch the pins of the pluggable module. Electrostatic discharge may cause failure of the module.

1. Power off the work station controller and remove the line cord from the AC outlet.

2. Remove the ROS card from the logic board, C5.

3. Remove the ROS module using the pluggable module extractor (part 453400) as follows:

   a. Hold the extractor handle Ⓐ and housing Ⓑ with one hand. Place the extractor guide Ⓒ over the module to be removed.
   b. Push the handle against the ROS card and, while maintaining pressure on the handle, press the housing and handle together. The extractor springs will move inward and upward, removing the module from the socket.
   c. Maintain the pressure on the housing and handle to keep the module clamped on the end of the extractor.
   d. Place the extractor and module over the shipping container and release the pressure on the housing and handle. The module will drop into the container.

4. Ensure that the pins on the new module are straight. Use the pin straightener tool (part 453473) to align the pins of the new module.

5. Install the new module. Position the beveled edge of the module as shown in 0710.

0750 ROS Card Switch Setting and Planar Module Disable Jumpers

Old Style Card

There are no switches on the old style card. Modules must be plugged into locations shown in MIM section 0710.

Addressable Feature Card

Modules may be plugged into any available position. The switches for each module position (switches adjacent to each socket) must be set as shown in the following chart for each module installed.

For some modules, planar module disable jumper(s) must also be installed.

Module part no.	Module Name	ROS Card switch setting (1 = on)	Planar disable jumpers (0410)
2452022	Text Entry Assist feature ROS module B (old)	11001010	none
2452029	Expanded Function feature module for Model 1 (old)	00010010	none
2452072	Text Entry Assist feature ROS module A (old)	10100000	none
2452080	X.21 Circuit Switched Support feature ROS module	11100000	none
2452371	X.25 Packet Switched Support feature ROS module	11100000	none
2452381	Expanded Function feature module for Model K01-S01	00010010	none
63X4457	Extended Function A feature module for Model 1 (new)	00010010	none
96X4601	Text Entry Assist "A" feature ROS Module A	10100000	none
96X4598	Text Entry Assist "A" feature ROS Module B	11000000	none
96X4650	Enhanced Keyboard support feature ROS module	11010000	Locations C and D

Example: Dip Switch Set

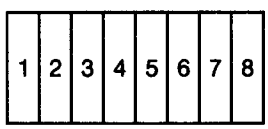

Note: There are four dip switch sets (eight switches each) on each Addressable ROS feature card. Dip switch set 1 sets addresses for ROS pluggable socket 1. Dip switch set 2 sets addresses for ROS pluggable socket 2, and so forth.

0760 ROS/EPROM Card Identification

Old style ROS card (Note 1)
P/N 2451982

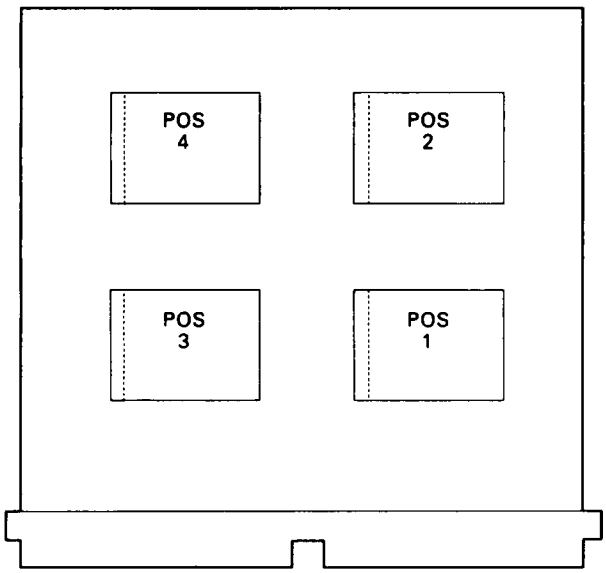

Addressable ROS card (Note 2)
P/N 67X0718

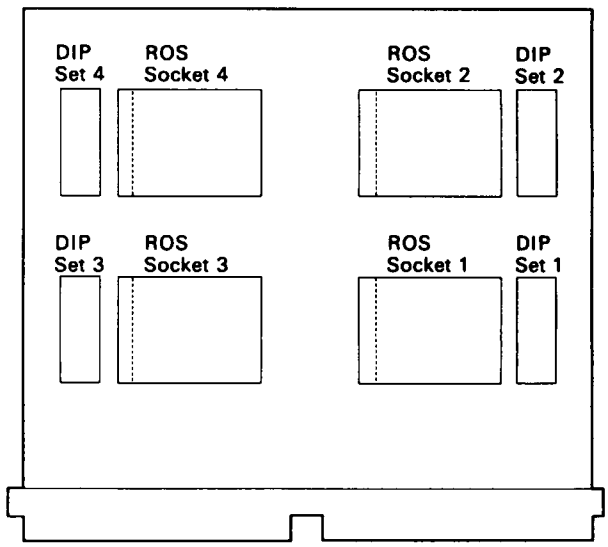

EPROM card (used as a Translate feature, Extended Function A for Models K01 or S01, Model S01 Translate RPQ and patch card)

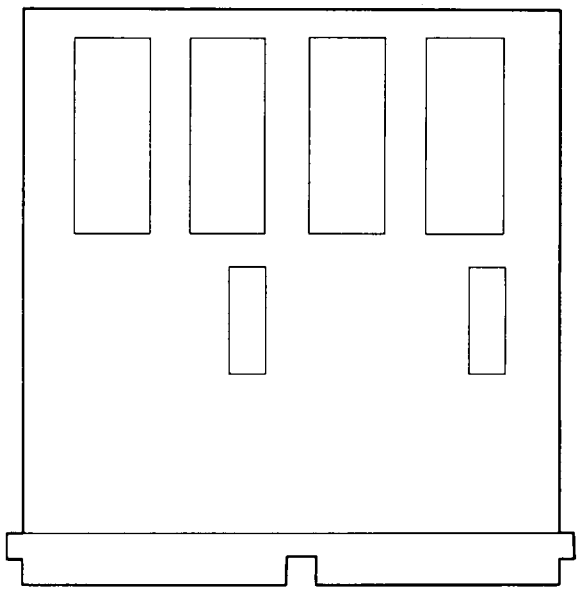

Notes:

1. The old style card supports only the following features:

   - Expanded/Extended Function (POS 1)
   - X.25 Packet Switched Network (POS 2) (Note 3)
   - X.21 Circuit Switched Support (POS 2) (Note 3) ffileext Entry Assist ROS Module A (POS 3)
   - Text Entry Assist ROS Module B (POS 4)
   - Text Entry Assist "A" ROS Module A (POS 3)
   - Text Entry Assist "A" ROS Module B (POS 4)

2. The addressable card supports all ROS features in any position with proper switch settings (MIM 0750).

3. The X.21 and X.25 features are mutually exclusive.

Communication Feature Information

1000 How to Use Communication Tables

Use the following chart to determine the table of communication lines to use with MAP 1000 for the communication feature that is installed.

Communication Feature	Table of Communication Lines
EIA (old style)	1021A
EIA (new style)	1021B
DDSA	1022
XLCA w/o X.21 sw	1023A
XLCA w X.21 sw	1023B

In each of the above, there are three types of lines: X (transmit), R (receive), and P (power). With an error code of 638C47 displayed, the example below indicates that both an X-type and an R-type of line have failed. In this case, when the MAP has the question: *Does the error code indicate an X-type of signal?*, you should answer *yes*.

Table of Communication Lines (Example)

Signal Line	Line Type (Note 5)	A1/C1 Pin	Wrap 2 Path	Error Code (Note 3)		C2/D2 Pin	Error Code 638CXX		Wrap 3 Path	I/O Panel Comm Conn/ And DCE Pin	Wrap 4 Path
				Gnd	Open		Gnd	Open			
				XX=	XX=		XX=	XX=			
-Data terminal ready	X	B02	→	12	13	D02	46	47	→	20	
-Data set ready	R	B13	←	12	13	D09	46	47	←	6	

Note: The error code format is either 621YXX or D91YXX, where

Y = 1 XLCA
2 DDSA
4 EIA

XX = Error description

The signal wrap path in the tables indicates if the signal is wrapped.

1021A Table of Communication Lines – EIA (Part 5864668 Only)

For new type EIA cards, see the following pages.

See 1030 for wrap descriptions and 1061 for EIA information.

See 1000 for how-to-use information.

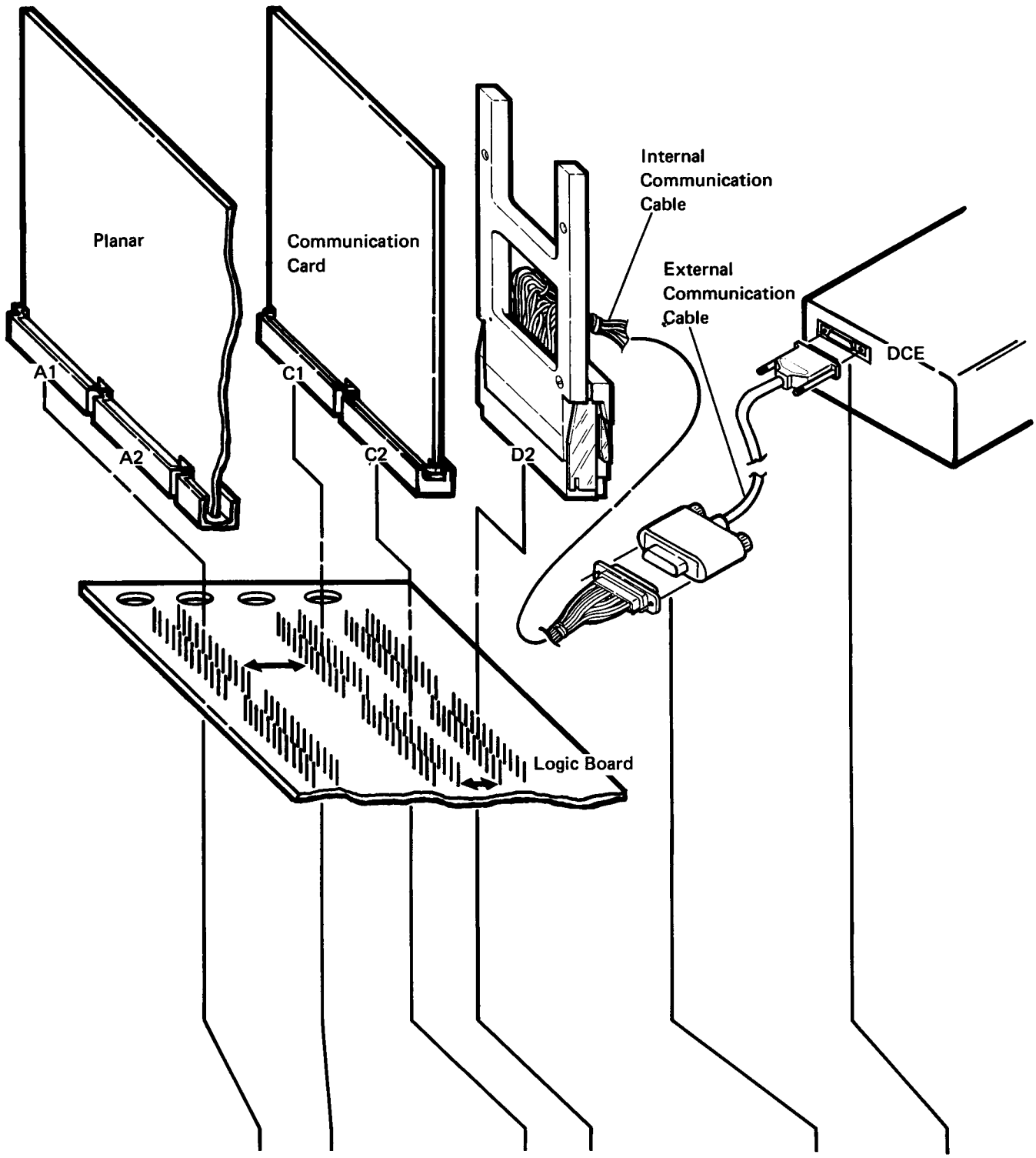

Signal Line	Line Type (Note 5)	A1/C1 Pin	Wrap 2 Path	Error Code D914XX or 6214XX (Note 3)		C2/D2 Pin	Error Code 638CXX		Wrap 3 Path	I/O Panel Comm Conn/ Pin and DCE Convertor Pin	Wrap 4 Path
				Gnd	Open		EIA Active	Gnd Open or Inactive			
				XX=	XX=		XX=	XX=			
-8.5 Vdc	P	D07			38/45						
+8.5 Vdc	P	B11			11						
Ground	P	D08			11					7	
Transmitted data	X	D04	→	03	03	B07	03	03	→	2	→
Received data	R	B10	←	03	03	B04	03	03	←	3	←
-New sync (Note 4)	X	B09	→			B08	40	41	→	14	
-Ring indicator	R	D12	←			B13	40	41	←	22 (Note 8)	
-Request to send	X	D02	→	38	39	B03	44	45	→	4	→
-Clear to send	R	D13	←	14	15	B10	44	45	←	5	←
-Received line signal detector	R	B12	←	16	17	D12	42	43	←	8	← (Note 7)
-Test control 1	X	B05	→	10	11	D07	42	43	→	18 (Note 8)	→
-Wrap 2 control	X	A2B03/ C1D05	→		11/39						
-Test indicator	R	D10	←	10	11	D11	4C	4D	←	25	← (Note 7)
-Test control 2	X	D09	→			B12	4C	4D	→	21 (Note 8)	
-Data terminal ready	X	B02	→	12	13	D02	46	47	→	20	→
-Data set ready	R	B13	←	12	13	D09	46	47	←	6	←
+Rate select	X	B04	→			D06	48	49	→	23	
TSET	R	B07	←			D04	48	49	←	15	←
RSET	R	B08	←		03	D10	4A	4B	←	17	←
-Select standby (Note 4)	X	B03	→			B05	4A	4B	→	11	

Notes:

1. The EIA communication card inverts and changes the voltage levels of all the signals from and to the planar.
2. Voltages at these pins are compatible with the EIA standard RS-232. The up level voltage is from +3 to +15 Vdc and is active.
3. This error code may be either 6214XX for CE/CSR test 62 errors or D914XX for power-on diagnostic errors. When no error code is shown for either an open or a ground, that line is not tested on a wrap level 2.
4. This signal is used for wrap testing only and is not used for normal operation.
5. X = transmit, R = receive, P = power.
6. -8.5 Vdc is present a C1D07 only.
7. The returned signal is generated by the modem as a result of the signal sent. Not all modems will return Test Indicate.
8. Some DCEs and modem eliminators use these pins for conflicting purposes. If this causes problems, the customer should order adapter cable part 2452096.

1021B New Type EIA Card

See 1064 for figure showing EIA cards.

See 1030 for wrap descriptions and 1061 for EIA information.

See 1000 for how-to-use information.

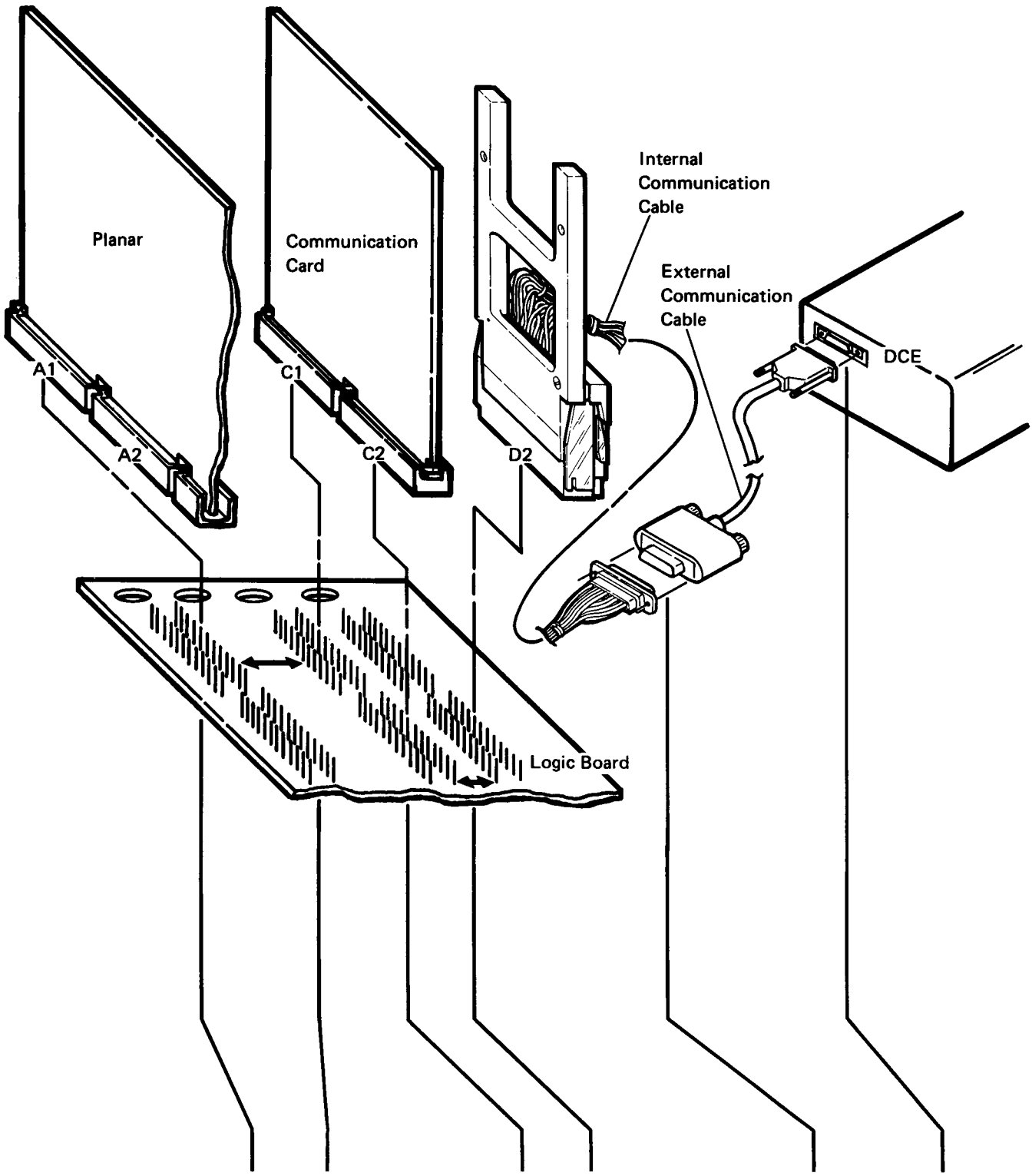

Signal Line	Line Type (Note 5)	A1/C1 Pin	Wrap 2 Path	Error Code D914XX or 6214XX (Note 3)		C2/D2 Pin	Error Code 638CXX (Note 8)		Wrap 3 Path	I/O Panel Comm Conn/ Pin and DCE Convertor Pin	Wrap 4 Path
				Gnd	Open		EIA Active	Gnd Open or Inactive			
				XX=	XX=		XX=	XX=			
+5 Vdc	P	D03			11						
-8.5 Vdc	P	D07						40/47			
+8.5 Vdc	P	B11						40			
Ground	P	D08			11			03/4D		7	
Transmitted data	X	D04	→	03	03	B07	03	03	→	2	→
Received data	R	B10	←	03	03	B04	03	03	←	3	←
-Wrap 2 control	X	A3B03/ C1D05	→		11/39						
-New sync (Note 4)	X	B09	→	40	41	B08	40	41	→	14	
-Ring indicator	R	D12	←	40	41	B13	40	41	←	22 (Note 8)	
-Test control 1	X	B05	→	42	43	D07	42	43	→	18 (Note 8)	→
-Received line signal detector	R	B12	←	42	43	D12	42	43	←	8	←
-Request to send	X	D02	→	44	45	B03	44	45	→	4	→
-Clear to send	R	D13	←	44	45	B10	44	45	←	5	←
-Data terminal ready	X	B02	→	46	47	D02	46	47	→	20	→
-Data set ready	R	B13	←	46	47	D09	46	47	←	6	←
+Rate select	X	B04	→	48	49	D06	48	49	→	23	
TSET	R	B07	←	48	49	D04	48	49	←	15	←
RSET	R	B08	←	4A	4B	D10	4A	4B	←	17	←
-Select standby (Note 4)	X	B03	→	4A	4B	B05	4A	4B	→	11	
-Test indicator	R	D10	←	10	4D	D11	4C	4D	←	25	← (Note 7)
-Test control 2	X	D09	→	10	4D	B12	4C	4D	→	21 (Note 8)	

Notes:

1. The EIA communication card inverts and changes the voltage levels of all the signals from and to the planar.
2. Voltages at these pins are compatible with the EIA standard RS-232. The up level voltage is from +3 to +15 Vdc and is active.
3. This error code may be either 6214XX for CE/CSR test 62 errors or D914XX for power-on diagnostic errors. When no error code is shown for either an open or a ground, that line is not tested on a wrap level 2.
4. This signal is used for wrap testing only and is not used for normal operation.
5. X = transmit, R = receive, P = power.
6. -8.5 Vdc is present a C1D07 only.
7. The returned signal is generated by the modem as a result of the signal sent. Not all modems will return Test Indicate.
8. Some DCEs and modem eliminators use these pins for conflicting purposes. If this causes problems, the customer should order adapter cable part 2452096.

1022 Table of Communication Lines – DDSA

See 1030 for wrap descriptions and 1062 for DDSA information.

See 1000 for how-to-use information.

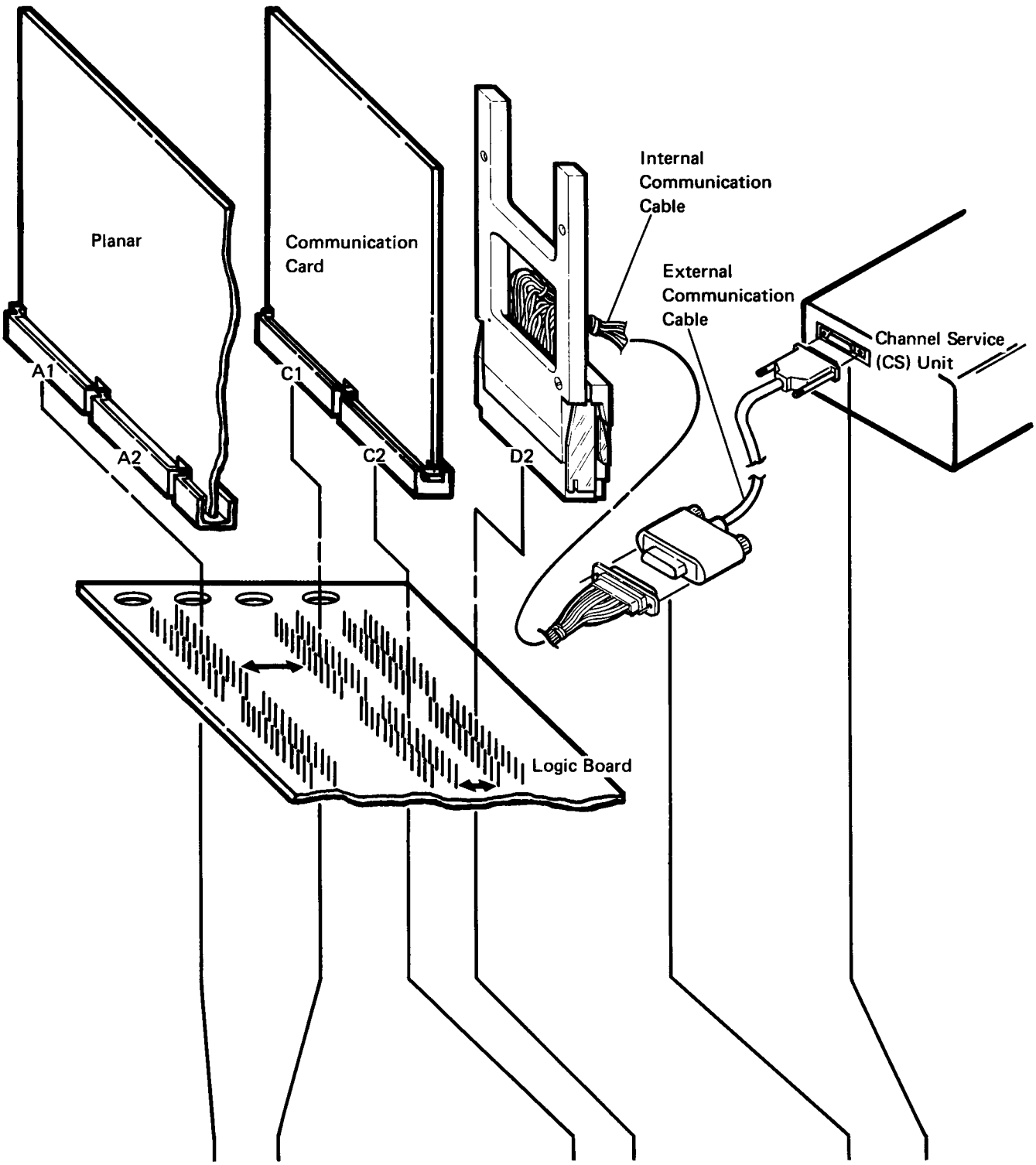

Signal Line (Note 1)	Line Type (Note 3)	A1/C1 Pin	Wrap 2 Path	Error Code D912XX or 6212XX (Note 2)		Signal Line	C2/D2 Pin	Error Code 638AXX	Wrap 3 Path	I/O Panel Comm Conn/ Pin	CS Unit Pin
				Gnd	Open						
				XX=	XX=			XX=			
+5 Vdc	P	D03			11	Transmit line A	B02	03 or 78	→	19	5
Ground	P	D08			11	Receive line A	B09	03 or 78	←	12	3
-5 Vdc	P	B06			13/15	Transmit line B	D05	03 or 78	→	24	6
+8.5 Vdc	P	B11			14	Receive line B	D13	03 or 78	←	13	4
Transmitted data	X	D04	→	03	03	Ground	D08			7	1
Received data	R	B10	←	03	03						
-Test control 1	X	B05	→	10	11						
-Test indicator	R	D10	←	10	11						
-Data set ready	R	B13	←		13						
-Request to send	X	D02	→	14	15						
-Clear to send	R	D13	←	14	15						
-Received line signal detector	R	B12	←								
Transmit clock	R	B07	←	36	36						
Receive clock	R	B08	←	35	35						

Notes:

1. Signal lines that are not logically connected to the DDSA are not shown.
2. When no error code is shown for either an open or ground, that line is not tested on a wrap level 2.
3. X = transmit, R = receive, P = power.

1023A Table of Communication Lines – XLCA

Use when X.21 Switched Support feature is not installed.

See 1030 for wrap descriptions and 1063 for XLCA information.

See 1000 for how-to-use information.

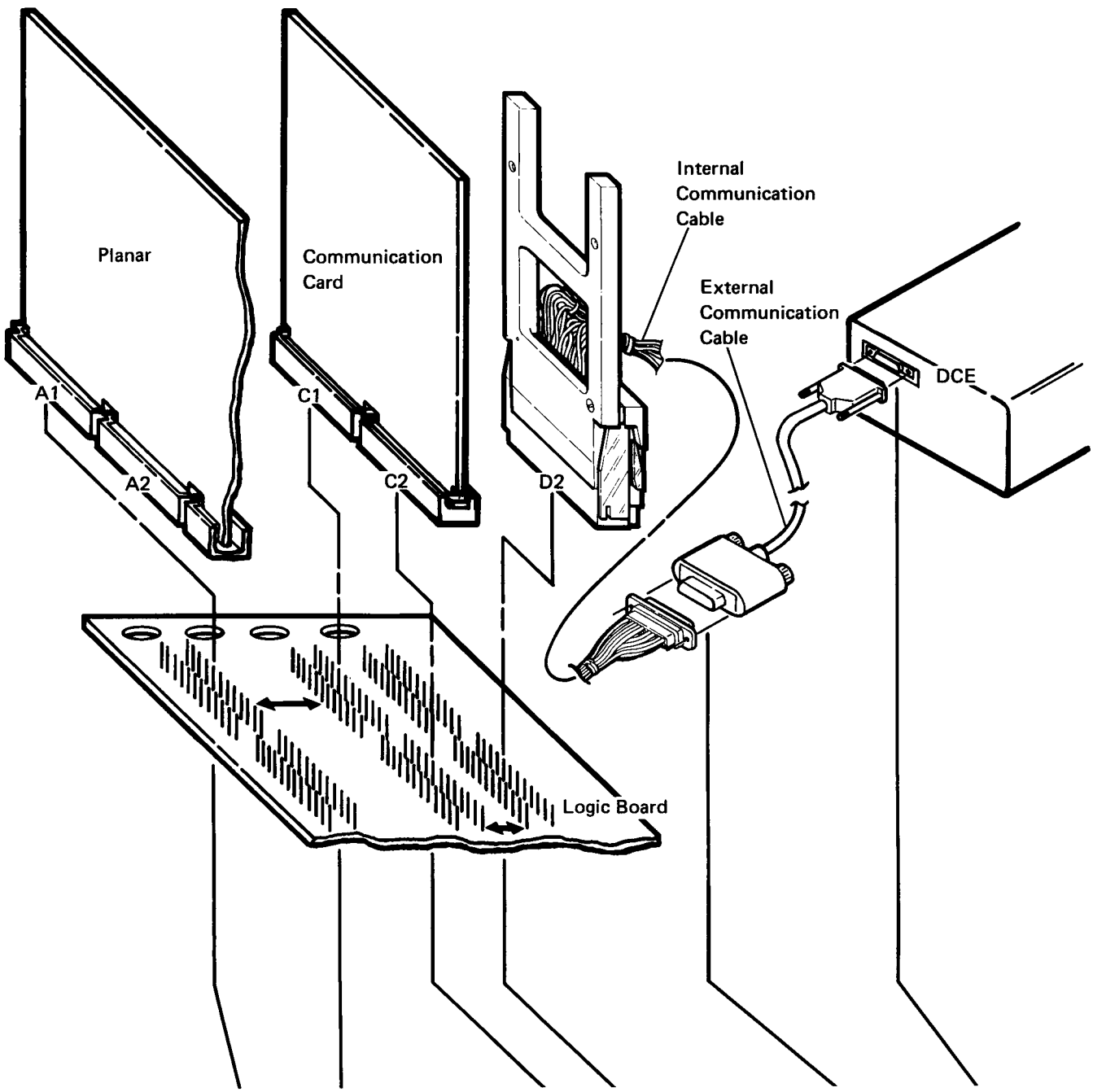

Signal Line (Note 1)	Line Type (Note 3)	A1/C1 Pin	Error Code 6211XX (Note 2) Gnd	Open	Wrap Path	Signal Line	C2/D2 Pin	Error Code 6211XX Gnd	Open	Wrap Path	I/O Panel Comm Conn Pin	DCE Pin
			XX=	XX=				XX=	XX=			
+5 Vdc	P	D03		11								
Ground	P	D08		11		Ground	D08				7	8
Transmitted data	X	D04	03	03	→	Transmit line A	B02	03/78	03/78	→	19	2
						Transmit line B	D05	03/78	03/78	→	24	9
Received data	R	B10	03	03	←	Receive line A	B09	03/78	03/78	←	12	4
						Receive line B	D13	03/78	03/78	←	13	11
-Test control 1	X	B05	10	11	→							
-Test indicator	R	D10	10	11	←							
-Data set ready	R	B13		13	←							
						Control A	B05	17	17	→	11	3
-Request to send	X	D02	14/38	15/39	→							
-Clear to send	R	D13	14	15	←	Control B	D06	16	16	→	23	10
						Indicate A	D10	17	16	←	17	5
-Received line signal detector	R	B12	16	17	←	Indicate B	B04	16	17	←	3	12
Receive clock	R	B08	35	35	←							
						SET A	D04	15	15	←	15	6
						SET B	B13	15	15	←	22	13
Transmit clock	R	B07	36	36	←			Note 4				

Notes:

1. Signal lines that are not logically connected to the XLCA are not shown.
2. When no error code is shown for either an open or ground, that line is not tested on a wrap. RLSD is not tested on all Model 1 machines without the X.21 Switched Support feature.
3. X = transmit, R = receive, P = power.
4. For machines with external communication cable at EC level 834326, error codes 35, 36, or 78 may also appear for SET line failures.

1023B Table of Communication Lines – XLCA

Use when X.21 Switched Support feature is installed.

See 1030 for wrap descriptions and 1063 for XLCA information.

See 1000 for how-to-use information.

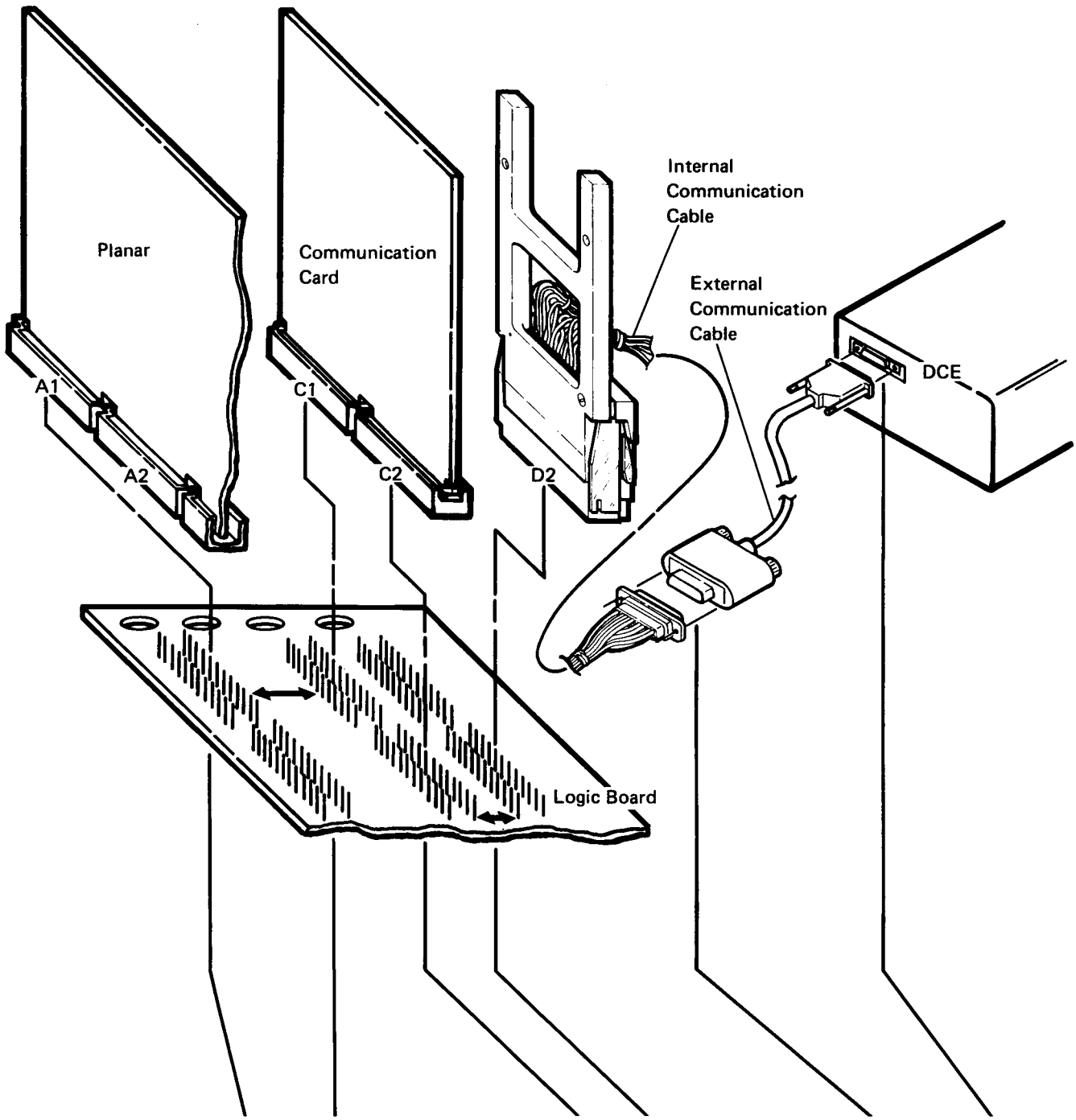

Signal Line (Note 1)	Line Type (Note 3)	A1/C1 Pin	Error Code 6319XX (Note 2) Gnd	Open	Wrap Path	Signal Line	C2/D2 Pin	Error Code 6319XX Gnd	Open	Wrap Path	I/O Panel Comm Conn Pin	DCE Pin
			XX=	XX=				XX=	XX=			
+5 Vdc	P	D03		11								
Ground	P	D08		11		Ground	D08				7	8
Transmitted data	X	D04	03	03	→	Transmit line A	B02	03/78	03/78	→	19	2
						Transmit line B	D05	03/78	03/78	→	24	9
Received data	R	B10	03	03	←	Receive line A	B09	03/78	03/78	←	12	4
						Receive line B	D13	03/78	03/78	←	13	11
-Test control 1	X	B05	24		→							
-Test indicator	R	D10	24		←							
-Data set ready	R	B13			←							
						Control A	B05	17	17	→	11	3
-Request to send	X	D02	14/38	15/39	→							
-Clear to send	R	D13	14	15	←	Control B	D06	16	16	→	23	10
						Indicate A	D10	17	16	←	17	5
-Received line signal detector	R	B12	16	17	←	Indicate B	B04	16	17	←	3	12
Receive clock	R	B08	35	35	←							
						SET A	D04	25	25	←	15	6
						SET B	B13	25	25	←	22	13
Transmit clock	R	B07	36	36	←			Note 4				

Notes:

1. Signal lines that are not logically connected to the XLCA are not shown.
2. When no error code is shown for either an open or ground, that line is not tested on a wrap. RLSD is not tested on all versions.
3. X = transmit, R = receive, P = power.
4. This error code will be displayed as 639925. For machines with external communication cable at EC level 834326, error codes 35, 36, or 78 may also appear for SET line failures.

1030 Communication Wrap Tests

This section describes how to select and run communication wrap tests, the wrap tests that are available, and their use.

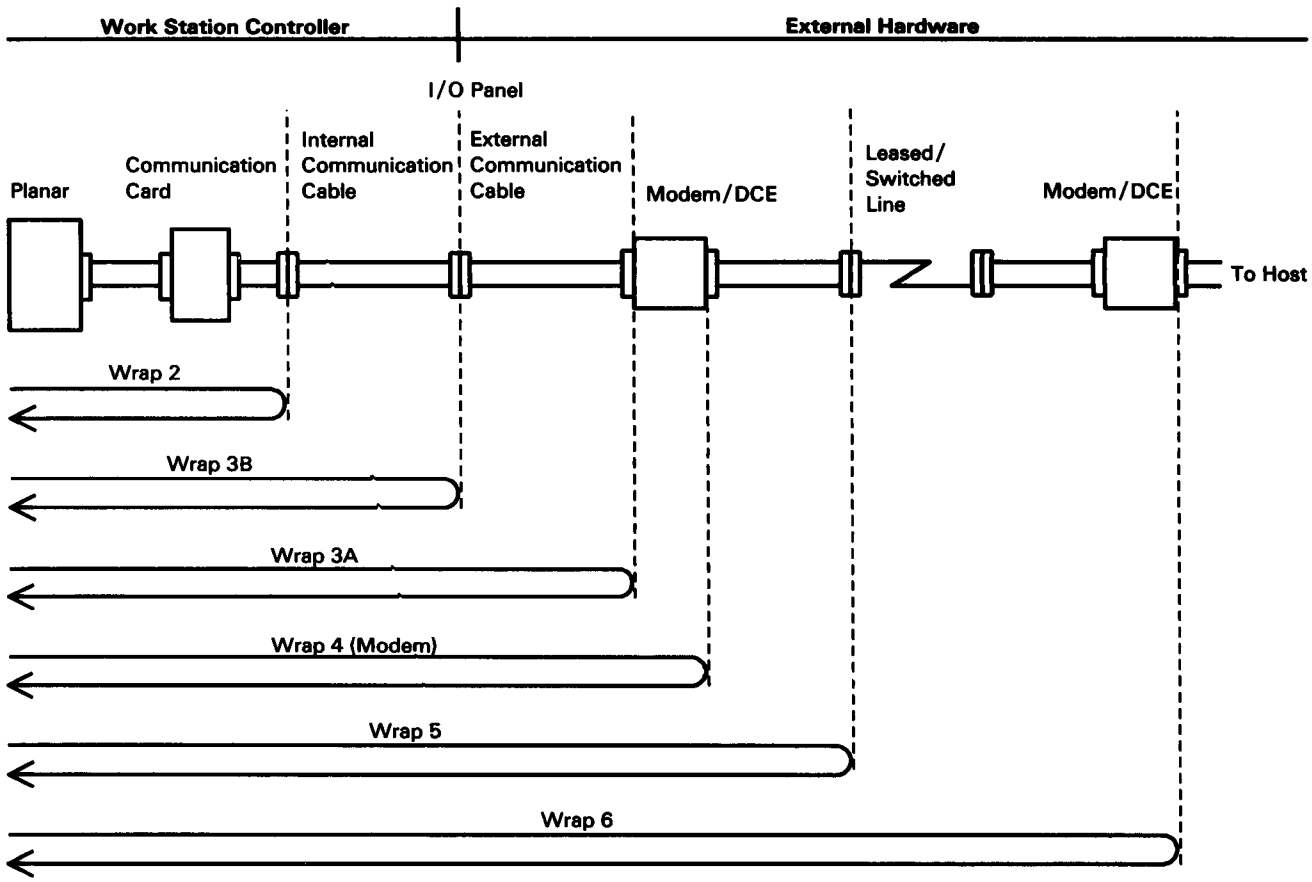

Note: 586X modems do not support LPDA commands for local or remote loopback. Local modem wrap is supported in the non-LPDA mode only for 586X modems.

How to Use the Wrap Tests

CAUTION
Ensure that all jobs on the attached work stations are terminated before selecting any wrap test or any other dedicated diagnostic test. Failure to do so will destroy all sessions in process.

1. Place the test switch on the work station controller to Normal.

2. Power on the work station controller.

3. Wait until the Ready LED turns on or until an error code is displayed (one or the other should occur after about 10 seconds).

4. Place the test switch on the work station controller to the Test position.

5. At any attached work station, reset any error condition and do the following:

   a. If you are using either a 5251, 5291, or 5292 display station, press the Cmd key, the test request key , and the D key.

   b. If you are using a 3179, a 3180, or a 3196 display station, press and hold the Alt key and press the Test key, then release the Alt key and press the D key.

   c. If your keyboard is different from those in steps a and b, refer to section 2003.

   The diagnostic screen should now be displayed.

```
CE0000


61
```

First Diagnostic Screen

```
CE0000  000000


6X C
```

Second Diagnostic Screen

6. Use the cursor up or down movement keys to change the 61 field until the first 2 digits equal the test number desired (61 through 6F).

7. To the right of the 6X field, a C will be displayed. To select the loop-on-error option, use the cursor right or left movement keys to place the cursor below the C, then use the cursor movement up key to change the C to an E.

   The 6 characters immediately above the test number are used to display prompting codes or test results.

   For all test other than test 61, the run counter is to the right of the Result Code field. This counter displays a decimal count of the number of times that a test has run. It is reset to zero each time a test is started. Other data will also be displayed. For more information about this data, see section 2012.

8. Press the Enter key to start the test.

9. Press the Error Reset key to exit this test.

10. Use steps 6 though 8 to select another test.

Wrap level descriptions and how to use information is on the following pages.

Wrap Level Descriptions

Wrap Levels 1 and 2

Wrap level tests 1 and 2 are run automatically at power on. Wrap level 2 can also be selected by CE/CSR test 62.

Wrap level 1 is a test of the communication adapter on the planar.

Wrap level 2 is a test of the planar-to-communication card interface and part of the communication card. **Note:** Wrap level 2 is not run at power on if the XLCA card is installed.

Wrap Level 3

This is a complete test of the communications adapter, the communication card, the internal communication cable, and the external communication cable. This test can also be run without testing the external communication cable to aid in isolating a fault.

Wrap Level 4

This wrap level tests the business machine interface part of the attached modem/DCE and the communication cable lines used for the configuration. For most modems/DCEs, this test also checks most of their internal operation.

Wrap level 5

This wrap is a complete functional test of the work station controller and modem/DCE. Data is encoded by the modem/DCE and sent on the analog transmit line to the wrap connector. The wrap connector attenuates the signal 16 dB and wraps it back to the analog receive line. The modem/DCE converts the analog signal into digital data. The digital data is sent to the work station controller where it is checked.

Wrap Level 6

Similar to wrap level 5, except that the signal is transmitted through the communication line and wrapped back by the host system modem/DCE. Wrap level 6 is a complete functional test of the communication line.

Note: When using wrap level 6, if the signal is not decoded, encoded again, and transmitted at the normal transmit level by the modem/DCE at the other end of the line, this can result in the received signal having distortion from both transmission directions.

How to Use Wrap Levels 1 through 6

Wrap Levels 1 and 2

These run automatically at power on. Wrap level 2 can be run by selecting CE/CSR test 62.

Wrap Level 3

This wrap is run by selecting CE/CSR test 63 and installing the wrap connector at the end of the work station controller communication cable for wrap 3A, or at the I/O panel for wrap 3B.

Note: If an adapter cable is installed on the external communication cable, remove it before installing the wrap connector.

See the wrap diagram for wrap 3B and disconnect the external communication cable from the I/O panel and plug the 25-pin wrap connector into the communication connector on the I/O panel.

See the wrap diagram for wrap 3A and disconnect the external communication cable at the modem/DCE or channel service unit and connect the cable connector to the wrap connector attached to the cable.

Wrap Level 4

This wrap can be done only with the IBM 3863, 3864, 3865, 3872, 3874, and 3875 modems or modems/DCEs that comply with CCITT V.54 and V.24/V.28 (1980 version) or modems/DCEs with the same wrap functions. Some non-IBM modems/DCEs may go into the wrap mode under control of the *test control* line. Some non-IBM modems/DCEs may have operator switches (usually labeled AL) that put the modem/DCE in wrap test mode (also known as analog loopback mode), some other modems/DCEs may not support any of the wrap tests.

Make sure the communication cable is connected to the modem/DCE and that the modem/DCE is powered on. For IBM modems 3863, 3864, 3865, 3872, 3874, and 3875, the Test/Operate switch is set to the Operate position. For modems/DCEs that do not loop

the data back when pin 18 is active, set the modem/DCE to the position that does loop the data back to the DTE. This is often known as the AL (analog loopback) or the LL (local loopback) test. Wrap level 4 is selected by CE/CSR test 64.

Note: When an IBM 3875 modem is used on a multipoint network, set the Test/Operate switch to the T2 position.

Wrap Level 5

Use wrap level 5 with IBM modems only. Unplug the cable from the modem to the wall socket and plug the cable into the wrap connector (part 8331287). Select CE/CSR test 65.

Note: On the IBM 3872 modem, you may need to set the equalizer switch(es) to 0. Record the settings and place the equalizer switch(es) to their original settings when completed. On the IBM 3875, you may need to remove the equalizer cards to get CE/CSR test 65 to run without errors. Do not change the equalizer switch settings on the 3875 modem to run this test.

Wrap Level 6

This test can be performed only when the work station controller is attached to a point-to-point duplex communication line.

For an IBM 3863, 3864, or 3865 modem, the modem configuration must be changed by setting the modem configuration switch 1 to the primary setting. Power off the modem, then power it back on. Set the Test/Operate switch to the Remote Loopback position.

Select CE/CSR test 66. Remember to set the modem configuration switch 1 to the secondary position after testing is complete.

For an IBM 3872, 3874, or 3875 modem, set the modem Test/Operate switch, at the host system end, to the T3 position. For a non-IBM modem, if remote loopback can be selected on the attached modem, use that mode. If the attached modem does not have a way to select remote loopback, set the modem, at the host system end, to the position that loops back the received data to the line. This is often known as DL (digital loopback). Select CE/CSR test 66.

Remember to set the modem to its original configuration after testing is complete.

1031 Clock Synchronization Check

Use this procedure to check the timing relationship between the clock signal and data signal.

When using this procedure with the EIA or XLCA interface and an external modem/DCE, either CE/CSR test 66 must be used or the host system must transmit a continuous data pattern other than hexadecimal 00 or FF.

The DDSA communication card includes a clock that automatically synchronizes with the network, if the jumpers for the speed are installed correctly (1051). The network bit rate is shown on the plate of the channel service unit.

The clock-to-data timing relationship can be checked with an oscilloscope. The following instructions describe how to prepare a Tektronix[6] oscilloscope type 453 or 475 and the work station controller.

Set up the oscilloscope as follows:

1. Ch 1 Volts/Div to 5 (X1 probe on the 453)
2. Ch 2 Volts/Div to 5 (X1 probe on the 453)
3. Vertical mode (mode trigger on the 453) to Chop (Trigger to Ch 1 only on the 453)
4. A Sweep Mode to Norm Trig
5. A Time/Div for:
   a. 2400 bps to 0.1 milliseconds/div
   b. 4800 bps to 50 microseconds/div
   c. 9600 bps to 20 microseconds/div
   d. 19.2K bps to 10 microseconds/div
   e. 40K bps to 5 microseconds/div
   f. 48K bps to 5 microseconds/div
   g. 56K bps to 5 microseconds/div
6. Horiz Display to A
7. Slope to +
8. Coupling to DC
9. Source to Ch 1 (Int on the 453)

Connect the oscilloscope to the work station controller as follows:

1. Use X1 or X10 probes (if X10 probes are used with the 453, set channels 1 and 2 to 0.5 V/div) and connect:
   a. Channel 1 to A1B07 (RSET) on the logic board.
   b. Channel 2 to A1B08 (RSET) on the logic board.
2. Power on the work station controller.
3. Run CE/CSR test 62 (2012) when the DDSA interface is installed. Run CE/CSR test 66 or have the host system transmit a continuous data pattern if either the EIA or XLCA interface is installed.

When data is sent, the fall time of the clock signal should occur at the leading edge of each bit-time + or - 1/4 of the bit-time as shown below. The clock signal on channel 1 may jitter at the right side of the oscilloscope display when the clock synchronization circuits are operating.

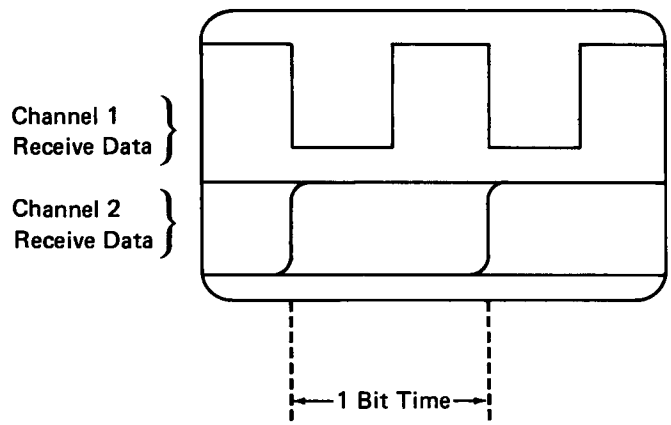

Notes:

1. In this figure, the speed is 2400 bps and the oscilloscope is set at 0.1 milliseconds/div.
2. The intensity of the oscilloscope display may have to be set to a high intensity to see the bit timing on the receive data.

6 Trademark of Tektronix, Inc.

1040 Communication Card Removal and Replacement – EIA, DDSA, and XLCA

1. Power off the work station controller and remove the line cord from the AC outlet.
2. Remove the communication card from logic board socket C1.
3. Check that the position of the jumpers and/or switches on the card removed is correct (1050 through 1052).
4. Set the jumpers and/or switches on the new card in the same position.
5. Replace the communication card.

1041 Internal Communication Cable Removal and Replacement Procedure

1. Power off the work station controller and remove the line cord from the AC outlet.
2. Disconnect the external communication cable connector from the I/O panel.
3. Remove the fan (0242).
4. Remove the internal communication cable connector from the logic board socket D2.
5. Remove the internal communication connector from the I/O panel.

Replace the internal communication cable in the reverse order of removal.

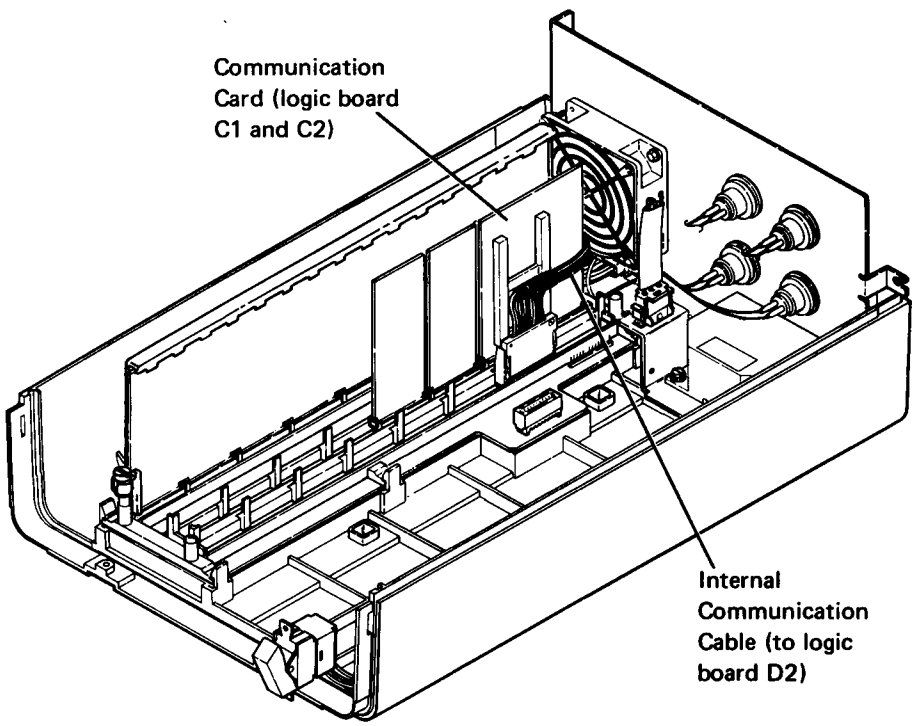

(Power supply and shield assembly removed for viewing only.)

1050 EIA Jumpers

No jumpers are needed for the new type card (see 1064).

On card part 5864668, install jumpers as shown.

B Jumper on. Enables DTE selection of either wrap 2 or wrap 4 using the 'wrap 2 control' line at logic board pins A2B03/C1D05.

C through G Not used; no jumpers.

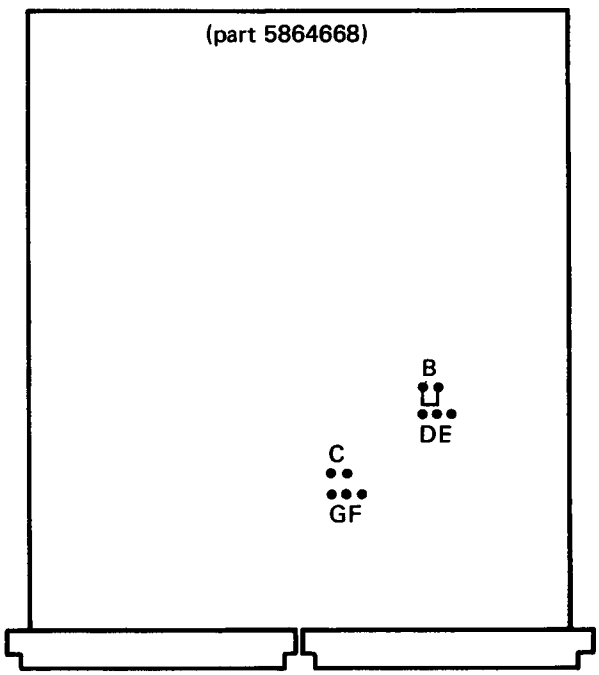

1051 DDSA Jumpers

Speed Selection

Install one of the jumpers defined below for the speed needed:

A On for 2400 bps

B On for 4800 bps

C On for 9600 bps

D On for 56,000 bps

Network Type

E On for multipoint operation (disables double loopback).
Off for point-to-point operation (enables double loopback).

There are no switches or adjustments on the DDSA card. All DDSA card functions are tested in wrap level 3 except for the DDSA clock synchronization.

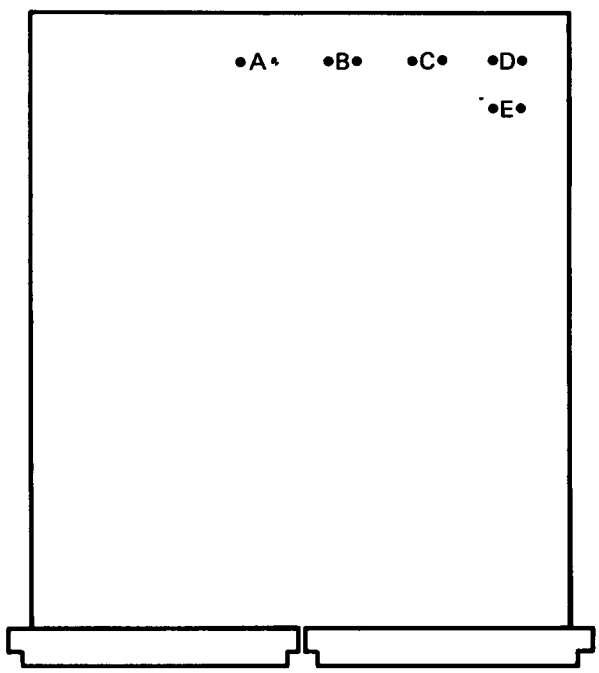

1052 XLCA Jumpers

Clear-to-Send (CTS) Delay Jumpers

Normally, this work station controller XLCA feature is jumpered for 16 and 8 bit-times to supply a 26 bit-time delay.

Other Jumpers

Jumpers A, D, E, G, I, K, N, and O are installed as shown in the figure. All other positions are not used.

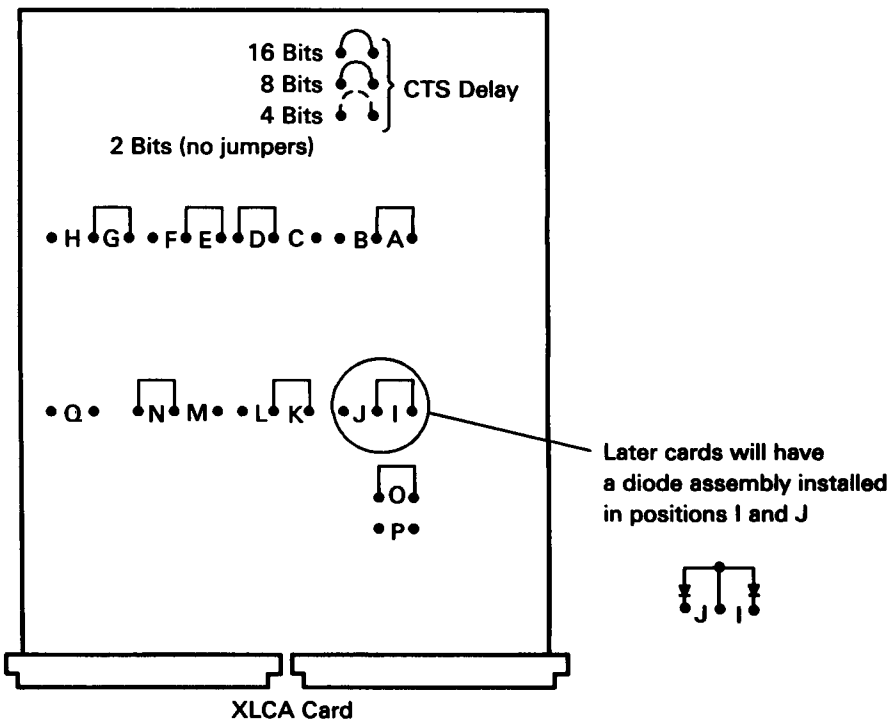

1060 dB-to-Voltage Conversion Table

This table is for measuring dB levels when an oscilloscope or a peak-to-peak voltmeter is used, instead of a dB meter.

Note: 0 dB represents 1 milliwatt: 0.775 volts RMS (2.18 V peak-to-peak) into 600 ohms.

dBm	Voltage Peak-to-Peak*	Voltage RMS	dBm	Voltage Peak-to-Peak*	Voltage RMS
-1	1.95	0.69	-21	0.19	0.069
-2	1.75	0.61	-22	0.17	0.061
-3	1.55	0.55	-23	0.15	0.055
-4	1.40	0.48	-24	0.13	0.048
-5	1.25	0.43	-25	0.12	0.043
-6	1.08	0.38	-26	0.11	0.038
-7	0.97	0.35	-27	0.095	0.035
-8	0.86	0.31	-28	0.085	0.031
-9	0.77	0.27	-29	0.075	0.027
-10	0.68	0.24	-30	0.067	0.024
-11	0.60	0.22	-31	0.060	0.020
-12	0.54	0.19	-32	0.056	0.019
-13	0.48	0.17	-33	0.047	0.017
-14	0.43	0.15	-34	0.042	0.015
-15	0.38	0.13	-35	0.038	0.014
-16	0.34	0.12	-36	0.034	0.012
-17	0.30	0.11	-37	0.030	0.011
-18	0.27	0.097	-38	0.027	0.009
-19	0.24	0.087	-39	0.024	
-20	0.21	0.078	-40	0.022	

*Available for pure sine wave.

1061 EIA/CCITT Interface Reference Information

There are no switches or adjustments on the new type card. See 1050 for jumpers needed on the old type card. All of the card is tested by wrap level 3 (CE/CSR test 63). The EIA/CCITT communication card uses eight signal drivers and eight signal receivers to convert signal levels between the main planar and the external modem. Signal levels from the main planar are converted to EIA/CCITT signal levels to the external modem/DCE, and EIA/CCITT signal levels from the external modem/DCE are converted to signal levels for the main planar. The following figure shows the signal level conversion that takes place between the main planar and the external modem/DCE.

The EIA/CCITT communication card pins assigned and other maintenance information are found in 1021, 1050, and 1062. The '-new sync' and '-select standby' lines (1021) are not functionally used, but are used for wrap testing only.

Testing the communication card and the cable is done with wrap level 3 (CE/CSR test 63). When the external modem/DCE is an IBM modem/DCE with wrap functions (such as the IBM 3863, 3864, 3865, 3872, 3874, or 3875) or modems/DCEs with the same functions, wrap level 4 (CE/CSR test 64) can be used to test the external modem/DCE and cable (refer to MIM 1060).

Supply Voltages and Ground Pins

- +8.5 Vdc C1B11, C2B11
- -8.5 Vdc C1D07
- Ground A1D08, C1D08, C2D08, D2D08
- Pin C2B11 is not used for the new type card but has +8.5 Vdc present through internal connection on the logic board.

Main Planar Signal Levels (VTL Levels)

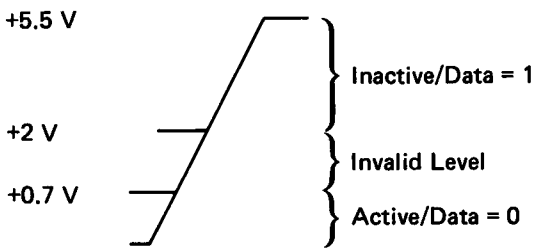

EIA/CCITT Signal Levels

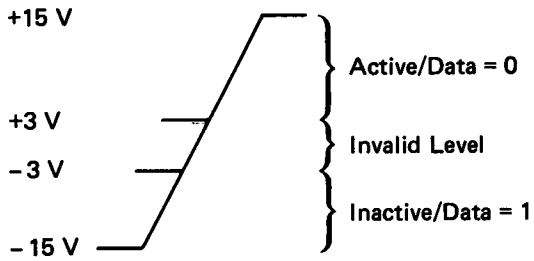

EIA/CCITT Interface Lines between the DTE and DCE

Common carrier or customer-supplied DCE must meet the specifications for signal lines, as specified by EIA standard RS-232C for US or Canada or by CCITT recommendation V.24 or X.21 bis for World Trade countries.

The following figure shows these interface lines, the EIA/CCITT lead names, and the signal path. Pin numbers not shown are not used by the work station controller.

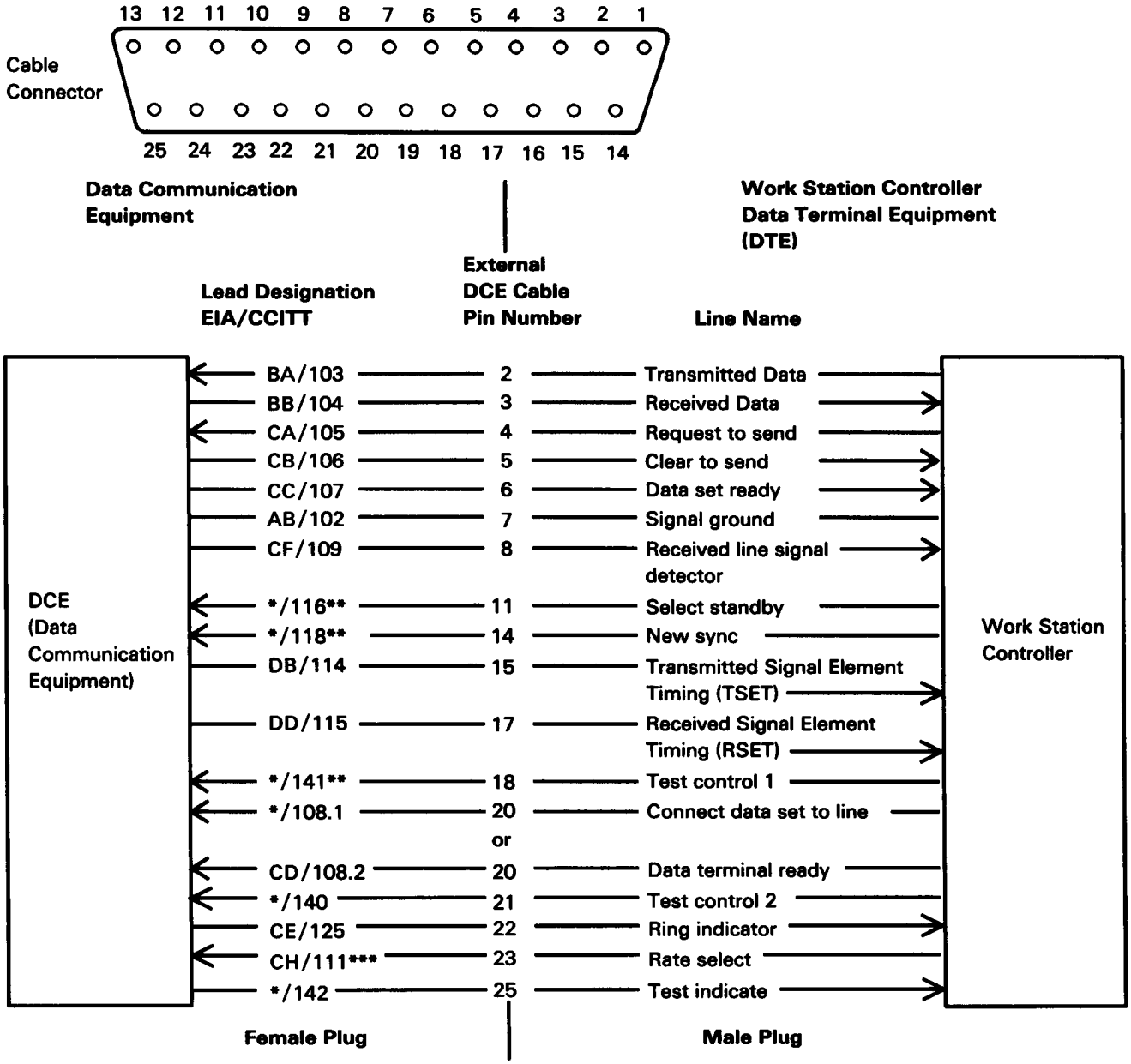

*Not defined by EIA in RS-232C (except for pin 14, which is defined for optional use such as transmitted backward channel data, and for pin 21, which is defined for optional use such as signal quality indication).

**Not defined by CCITT X.21 bis.

Lines with an * or ** may be used for different and/or conflicting purposes by some attached devices.

New Sync (pin 14) and Select Standby (pin 11) are present but are not used during normal operation.

Signal Line Descriptions

Signal Ground (SG): The common ground for all signal lines.

Transmitted Data (TD): Digital data signals generated and sent from the work station controller to the modem/DCE for transmission to the host system.

Received Data (RD): Digital data signals generated by the modem/DCE from the signals received on the communication line and sent from the modem/DCE to the work station controller.

Request to Send (RTS): A signal generated by the work station controller to put the modem/DCE in transmit mode.

Clear to Send (CTS): A signal generated by the modem/DCE that indicates to the work station controller that the modem/DCE is ready to transmit data. CTS is usually active in response to RTS active.

Data Set Ready (DSR): A signal generated by the modem/DCE that, when active, indicates one of the following:

- For a nonswitched line and a switched line with manual answer, DSR indicates the modem/DCE is ready to operate.
- For a modem/DCE with a switched line autoanswer setup, DSR indicates the modem/DCE is connected to the communication line and is ready to operate.

Data Terminal Ready (DTR): One of two uses (the other is CDSTL) that can be selected by configuration bit 5 (0460). Both use the same signal line (20). In DTR, this signal indicates to the modem/DCE that the work station controller is ready to operate.

When the modem/DCE has the autoanswer function, DTR also prepares the modem/DCE to answer a call, connects the modem/DCE to the communication line, and maintains that connection until DTR is inactive.

During automatic answering, the connection to the communication line is in response to the DTR being active. An acceptable connection (off hook) activates DSR. An inactive DTR causes the autoanswer function to deactivate the communication line connection (go on hook). DTR usually goes inactive when the transmission of data is completed.

Connect Data Set to Line (CDSTL): A usage similar to DTR that is used with some World Trade modems/DCEs. Uses the same signal line as DTR (20) and is selected by configuration bit 5 (0460). In CDSTL, this signal indicates to the modem/DCE that the work station controller is ready to operate.

On a nonswitched communication line, the CDSTL signal is active in response to the DSR being active.

On a switched communication line, CDSTL is active in response to DSR being active (this occurs when the line connection is made through a call placed to the host system), or in response to RI being active (this indicates to the modem/DCE that the work station controller is ready to answer the incoming call).

Received Line Signal Detector (RLSD): (also known as Carrier Detect) A signal generated by the modem/DCE to indicate to the work station controller that a carrier signal is present on the communication line.

Data Signal Rate Select (DSRS): (also known as Speed Select) A signal generated by the work station controller and used by modems/DCEs that can use either of two transmission speeds over the same communication line. When this signal is active, the lower speed is selected.

On the work station controller, the 'rate select' signal is controlled by the Rate Select switch, if installed. If the Rate Select switch is not installed, the signal is always at the level that selects the higher speed.

Note: The polarity for the 'rate select' signal is opposite that for all other control lines.

Received Signal Element Timing (RSET): Generated by the modem/DCE to supply timing pulses to the work station controller. These pulses control the shift of data bits from the modem/DCE to the receive buffer.

Transmitted Signal Element Timing (TSET): Generated by the modem to supply timing pulses to the work station controller. These pulses control the shift of data bits from the transmit buffer to the modem/DCE.

New Sync: Causes a multipoint control modem to sync more quickly when switching between stations. This signal is not used by the work station controller except for wrap testing.

Select Standby: A signal generated by a DTE that controls the selection of the SNBU line on a non-switched line modem/DCE that has the SNBU function. This signal is not used by the work station controller except for wrap testing.

Ring Indicator (RI): A signal generated by the modem/DCE to indicate to the work station controller that a ringing signal is being received on the communication line.

Test Control 1: (also known as local loopback) A signal generated by the work station controller that conditions the modem/DCE to perform a local modem/DCE wrap test if the modem/DCE supports the wrap function and the use of the signal line. The transmit data from the work station controller is looped back on the receive line to the work station controller.

Test Control 2: (also known as remote loopback) A signal generated by the work station controller that conditions the local and remote modems/DCEs to perform a remote modem/DCE wrap test if the modems/DCEs support the remote wrap function and the use of this signal. The transmit data from the work station controller is looped back on the receive line to the work station controller.

Test Indicate: A signal generated by the modem/DCE that indicates that the modem/DCE is in a test mode because of performing a self-test, a remotely requested test, or a locally requested test.

1062 DDSA Interface Reference Information

The DDSA feature functions as a 4-wire duplex adapter at a speed of 2400 bps, 4800 bps, 9600 bps, or 56K bps. Jumpers on the DDSA card (1051) are set to match the DDS[7] line speed. The line speed is determined by the type of service ordered.

Transmission Signal

The signal transmitted from the DDSA to the digital data network is a bipolar, return-to-zero signal. When a 0-bit is transmitted, the signal is at 0 volts. However, when a 1-bit is transmitted, the signal is either positive or negative, depending on the polarity of the last 1-bit transmitted. For example, if a negative 1-bit is transmitted, the next 1-bit will be positive as shown in the following figure.

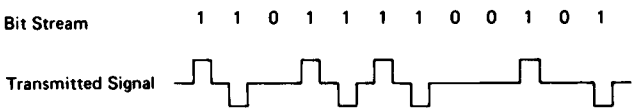

Clocking is included on the DDSA card and is automatically synchronized to the incoming signals on the communication lines (1030).

To maintain clock synchronization and to inform the receiving DDSA of status, the DDSA generates violation sequences or characters. These characters are violation characters because two consecutively transmitted 1-bits have the same polarity (either negative or positive). The violation characters are idle, zero suppression, and out of service. If a station is powered off, the DDS network automatically includes the out-of-service violation characters to the line for that station. A description of the use of violation characters is contained on the following pages.

The DDSA does not transmit any signals to the network while doing a wrap test.

---

7 DDS, Dataphone Digital Service, a trademark of AT&T.

Idle Characters

The idle character is generated and transmitted by the DDSA when the 'request to send' interface line is not active. This character indicates that the DDSA is in an idle state.

The bit sequence for the idle character is 111X0V, where:

X = 0 or 1, whichever one ensures an odd number of 1-bits since the last violation bit.

V = 1, a violation bit that ensures the same polarity as the preceding 1-bit.

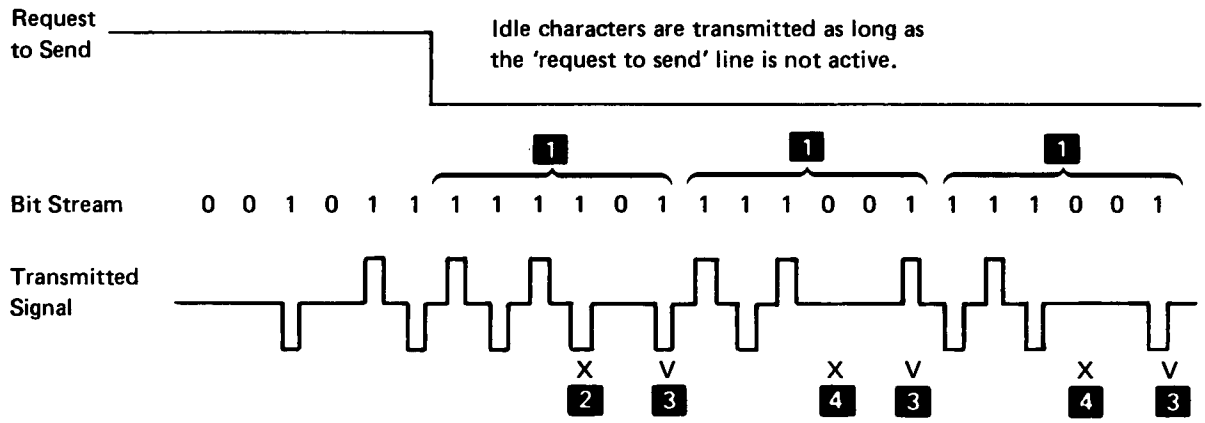

1 Three transmitted idle characters.

2 First X-bit is opposite in polarity to the preceding 1-bit.

3 All V-bits are of the same polarity as the 1-bit that precedes them.

4 Both of these X-bits are at 0 volts to ensure an odd number of 1-bits since the last violation bit.

Zero Suppression Characters

When the transmitted data contains six consecutive 0-bits, the transmit data is changed to form a zero suppression character. The zero suppression character is transmitted by the DDSA to maintain bit synchronization. This character ensures that at least one 1-bit is transmitted when the data contains six consecutive 0-bits. Six consecutive 0-bits are transmitted as 000X0V, where:

X = 0 or 1, whichever one ensures an odd number of 1-bits since the last violation bit.

V = 1, a violation bit that ensures the same polarity as the preceding 1-bit.

The receiving DDSA will interpret a zero suppression character as six consecutive 0-bits. The output of the receiving DDSA to the receiving DTE will be the same as the original transmitted data.

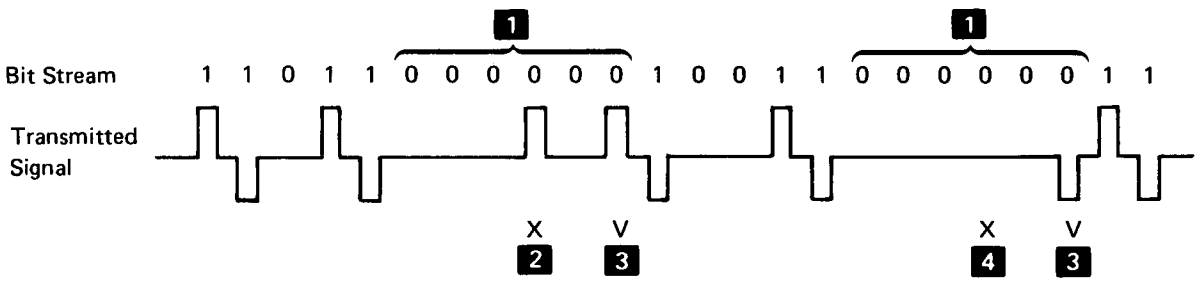

1 Zero suppression sequences.

2 First X-bit is opposite in polarity to the preceding 1-bit.

3 Both V-bits are of the same polarity as the 1-bit that precedes them.

4 Second X-bit is at 0 volts to ensure an odd number of 1-bits since the last violation bit.

Out-of-Service Characters

The out-of-service character is generated and transmitted by the digital data network. The character is sent to the DDSAs attached to the network to indicate a problem in the network. The bit sequence for the out-of-service character is 001X0V, where:

X = 0 or 1, whichever one ensures an odd number of 1-bits since the last violation bit (see the following figure).

V = 1, a violation bit that ensures the same polarity as the preceding 1-bit.

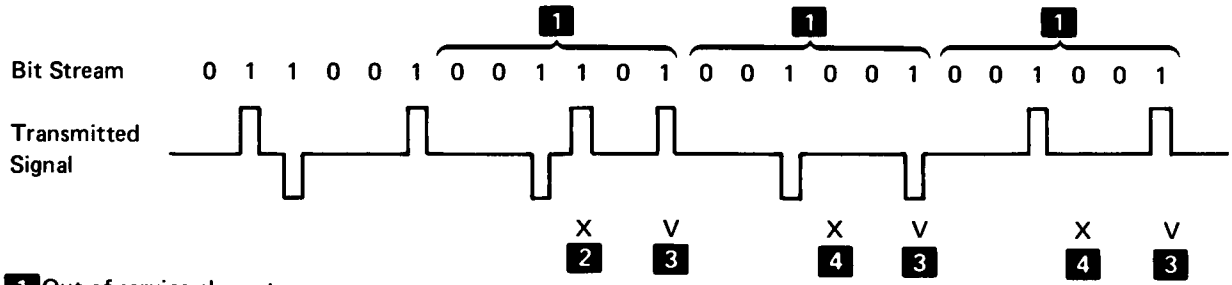

1 Out-of-service characters.

2 First X-bit is opposite in polarity to the preceding 1-bit.

3 All V-bits are of the same polarity as the 1-bit that precedes them.

4 Both of these X-bits are at 0 volts to ensure an odd number of 1-bits since the last violation bit.

Signal Line Descriptions

Most interface signal lines for the DDSA (1022) have the same function as the interface signal lines for the EIA feature (1061), except that the signals are generated and received by the DDSA instead of the modem/DCE. The lines that function differently are as follows:

Request to Send: This line is activated to enable the DDSA to enter transmit mode. If the line is not active, the DDSA sends idle characters.

Clear to Send: This line is activated by the DDSA in response to the 'request to send' line going active. The 'clear to send' line goes active in approximately a 20-bit interval after the 'request to send' line goes active. When the 'request to send' line goes inactive, the 'clear to send' line goes inactive in approximately one 1-bit interval. The clear-to-send delay is approximately 8 milliseconds for 2400 bps, 4 milliseconds for 4800 bps, 2 milliseconds for 9600 bps, and 0.36 milliseconds for 56K bps.

When the 'clear to send' line is inactive, the planar does not send any data to the DDSA.

Carrier Detect: This line is activated by the DDSA to indicate that the last 12-bit interval represented data (not out-of-service or idle violation characters). The 'carrier detect' line goes inactive when three consecutive idle or out-of-service characters are received, or when three consecutive zeros are received from the digital data network.

When the 'carrier detect' line is inactive, the 'receive data' line is held at a mark level (all 1's).

Data Set Ready: This line is activated by the DDSA to indicate that active signals are on the communication line (not out-of-service or violation characters or no bits at all). The 'data set ready' line goes not active in an 18-bit interval if three consecutive out-of-service characters or three consecutive zeros are received.

Transmit Levels

The DDSA transmit levels are shown below: The DDSA interprets receive voltage levels more positive than +1.05 V and more negative than -1.05 V as mark levels (1). Voltages from +0.35 V to -0.35 V are interpreted as space levels (0). Voltages from +0.35 V to +1.05 V and -0.35 V to -1.05 V are not valid.

Output voltages of the channel service unit to the DDSA card for a mark level (1) are from ±1.33 V to ±2.1 V; for a space level (0), the voltages are from -0.21 V to +0.21 V.

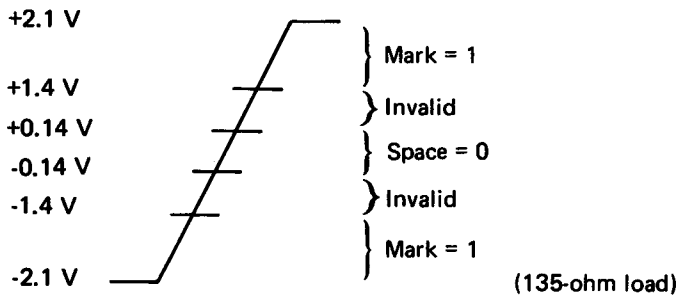

1063 XLCA Interface Reference Information

The XLCA X.21 level converter/adapter card is plugged into socket C1 on the logic board in the work station controller. The adapter card attaches to the user's data communication equipment (DCE) via the communication connector on the work station controller and enables the user to connect to a DCE that has attributes matching CCITT recommendation X.24/X.27 and that operates as described in CCITT recommendation X.21.

The XLCA operates in the data rate range of 2400 bps to 48K bps. Clocking is supplied by the DCE.

Transmit Levels

The XLCA supplies the following signal (VTL) levels:

Signal Levels (VTL levels)

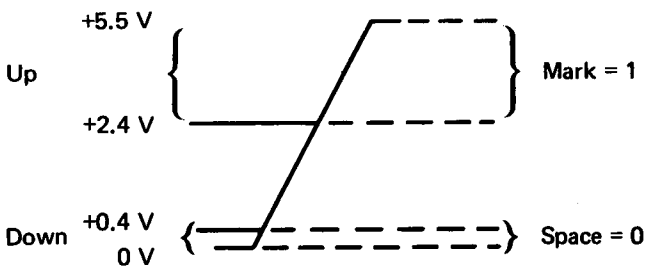

Interface Signal Lines to the Planar

Transmitted Data: (also known as Send Data) This signal is driven by the planar in synchronization with the DCE clock.

Received Data: This signal is driven by the XLCA in response to the line signal data from the DCE.

Request to Send (RTS): This signal is driven by the planar and conditions the XLCA to transmit data after a programmed CTS delay set by the CTS delay jumpers on the XLCA card.

Clear to Send (CTS): This signal is generated by the XLCA in response to RTS from the planar and indicates that XLCA is ready to transmit data. There are eight delay options available. These delays are specified in bit-times. The least delay is 2 bit-times which is hard-wired and needs no jumpers. The maximum delay is 30 bit-times which needs all the CTS delay jumpers (4, 8, and 16) installed.

Received Line Signal Detector (RLSD): (also known as Carrier Detector) This signal is active when the Indicate (I) signal from the DCE is active.

Data Set Ready (DSR): This signal is normally set to activate and deactivate under certain conditions by the installation of jumper K. This means that DSR will be on (down level) until the following conditions have been met for 15 consecutive bit-times.

- Receive must be at a space condition and Indicate must be off.
- Both Receive and Indicate must be off for 15 consecutive bit-times. Should these signals not be off for 15 consecutive bit-times, DSR will not go off (up level).

After DSR has dropped, a change of either Receive to a mark condition or Indicate to an on condition will cause DSR to go on immediately.

During a normal wrap test, this signal line is held to an on (down level) condition during the complete wrap test.

Received Signal Element Timing (RSET): (Receive Clock) This clock is generated by the modem/DCE and is driven by the XLCA to supply timing for the work station controller for clocking in received data.

Transmitted Signal Element Timing (TSET): (Transmit Clock) This clock is generated by the modem/DCE and is driven by the XLCA to supply timing for the work station controller to shift transmitted data to the modem/DCE.

Error Reset/Test Control: Generated by the planar. Only the error reset option is valid on this machine (Jumpers A and N on the XLCA card). (See reference 1052 for jumper installation.) The activation (down level; held for a minimum of 10 microseconds) and then deactivation (up level) of this signal line will cause the error latch to reset if it had been set earlier.

Test/Error Indicate: This signal line may be jumpered to give either test indicate or error indicate. For early machines, only the error indicate option (Jumper I on the XLCA card) is valid except when you are directed to use the J position by the maintenance documentation. Later machines have a diode assembly in these jumper positions that uses either signal, whichever one is active. When the line goes active (down level), an error occurred and the error latch was set. The line will remain active until the error latch is reset.

Data Terminal Ready (DTR): This signal, driven by the XLCA, indicates that the work station controller is ready to receive.

XLCA Interface Signal Lines to the DCE

All the following lines work as a balanced pair:

Transmit Pair (TA & TB): Data transmitted to the DCE.

Receive Pair (RA & RB): Data received from the DCE.

Indicate Pair (IA & IB): Indicate status received from the DCE.

Control Pair (CA & CB): Control status is transmitted to the DCE.

SET (Signal Element Timing, SA & SB): Clock signal received from the DCE.

XLCA Card Application

The XLCA card is used with the 5294 Control Unit for the following applications:

1. A 5294 Control Unit that has the X.21 Switched Support feature for attachment to X.21 switched public data networks.

2. The standard SDLC 5294 Control Unit for attachment to an X.21 nonswitched public data network via a DCE that uses the X.24/X.27 interface.

3. A 5294 Control Unit that has the X.25 Support feature for attachment to X.25 packet switched networks via a DCE that uses the X.24/X.27 interface.

For application number 1 above, the XLCA card is the only communication interface card that can be used. The CTS and DSR signal lines from the XLCA card are not used. See *X.21 Switched Communication Protocol* and *X.21 Interface States* in the *Theory* section for more information.

For applications 2 and 3, either the X.24/X.27 interface or the RS-232C:CCITT V.24/V.28 interface can be used. In these cases, the interface between the planar and the communication card always operates as if the EIA/CCITT feature card is installed. The XLCA card provides the CTS signal with appropriate delay and also monitors for the DCE Not Ready state to generate the correct DSR signal.

XLCA Interface Signal Lines from the Planar to the DCE

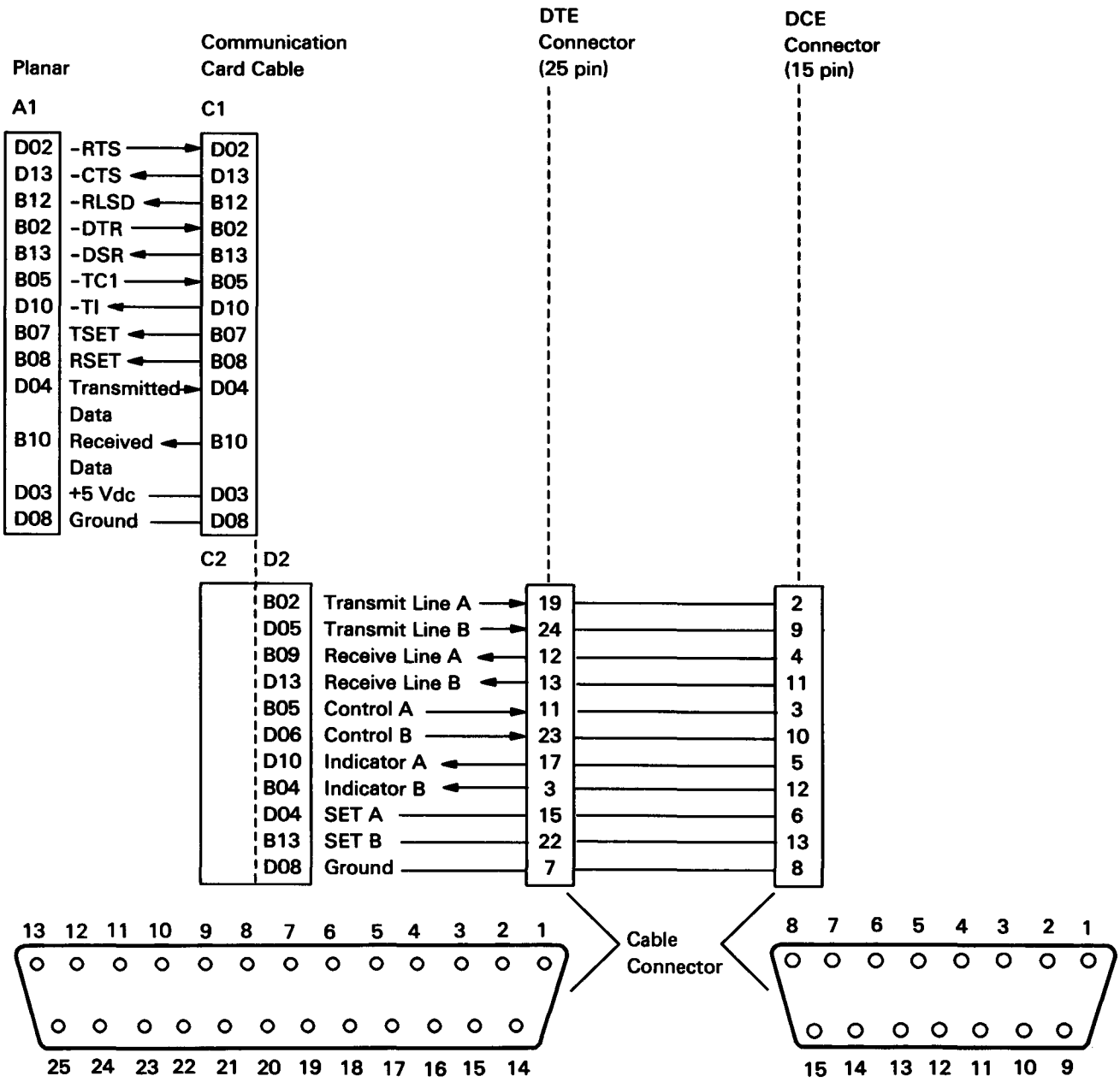

1064 Communication Card Identification

These communication cards are located on the logic board at socket C1 (0113).

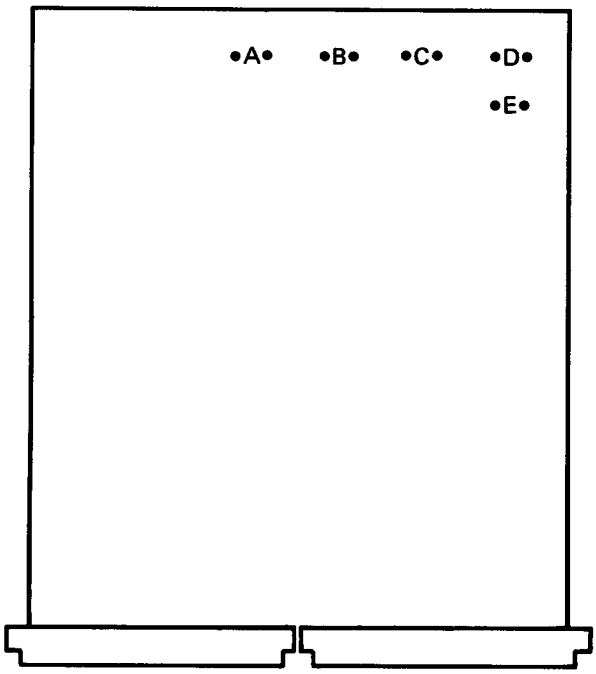

DDSA Card

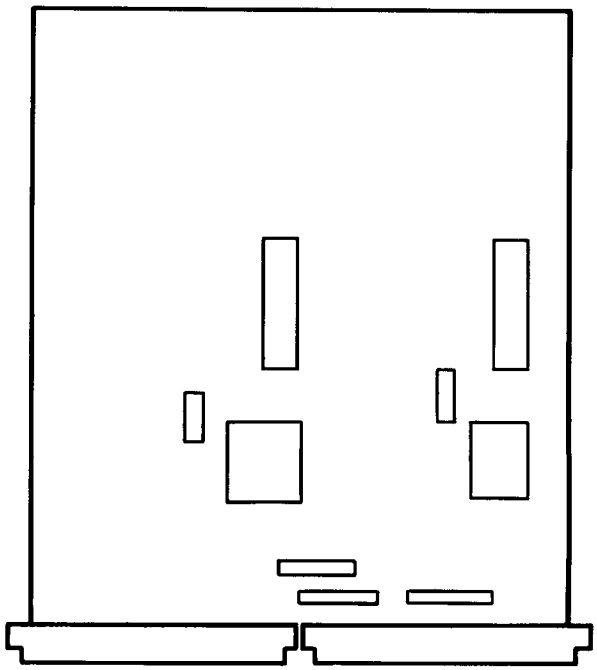

EIA Card—New Type

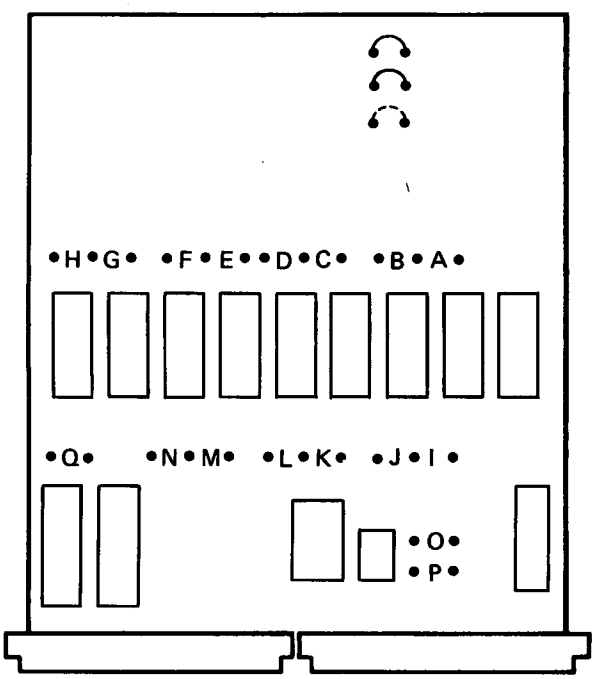

XLCA Card

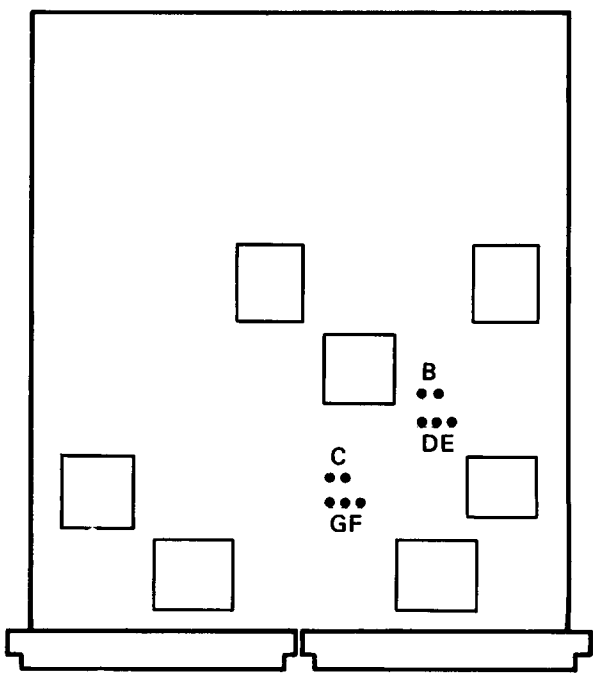

EIA Card—Old Type (part 5864668)

For your convenience, a form for comments is in the back of this publication.

Diagnostics and Test Information

2001 Operation Flowchart

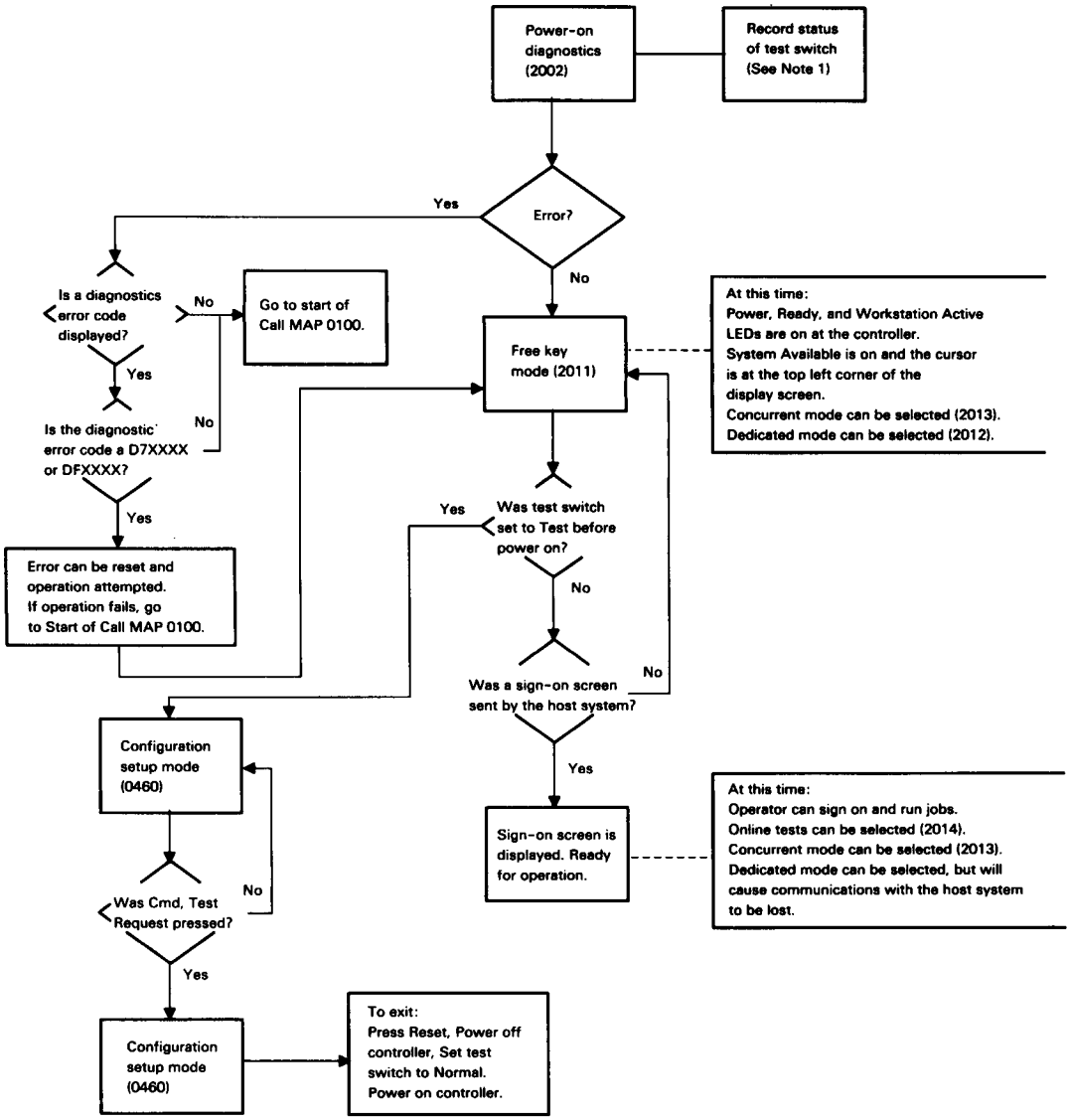

Notes:

1. For customer setup, set the test switch to Test before power on. For CE/CSR communication diagnostics, set the test switch to Test after power-on diagnostics have completed.
2. The following errors can be reset and then the operation continued:

   D7XXXX
   DFXXXX

2002 Diagnostic Summary

This figure shows the diagnostic routine that can be executed on a work station controller to check both the internal functions and online functions. A detailed description of each function is indicated by the reference number in parentheses.

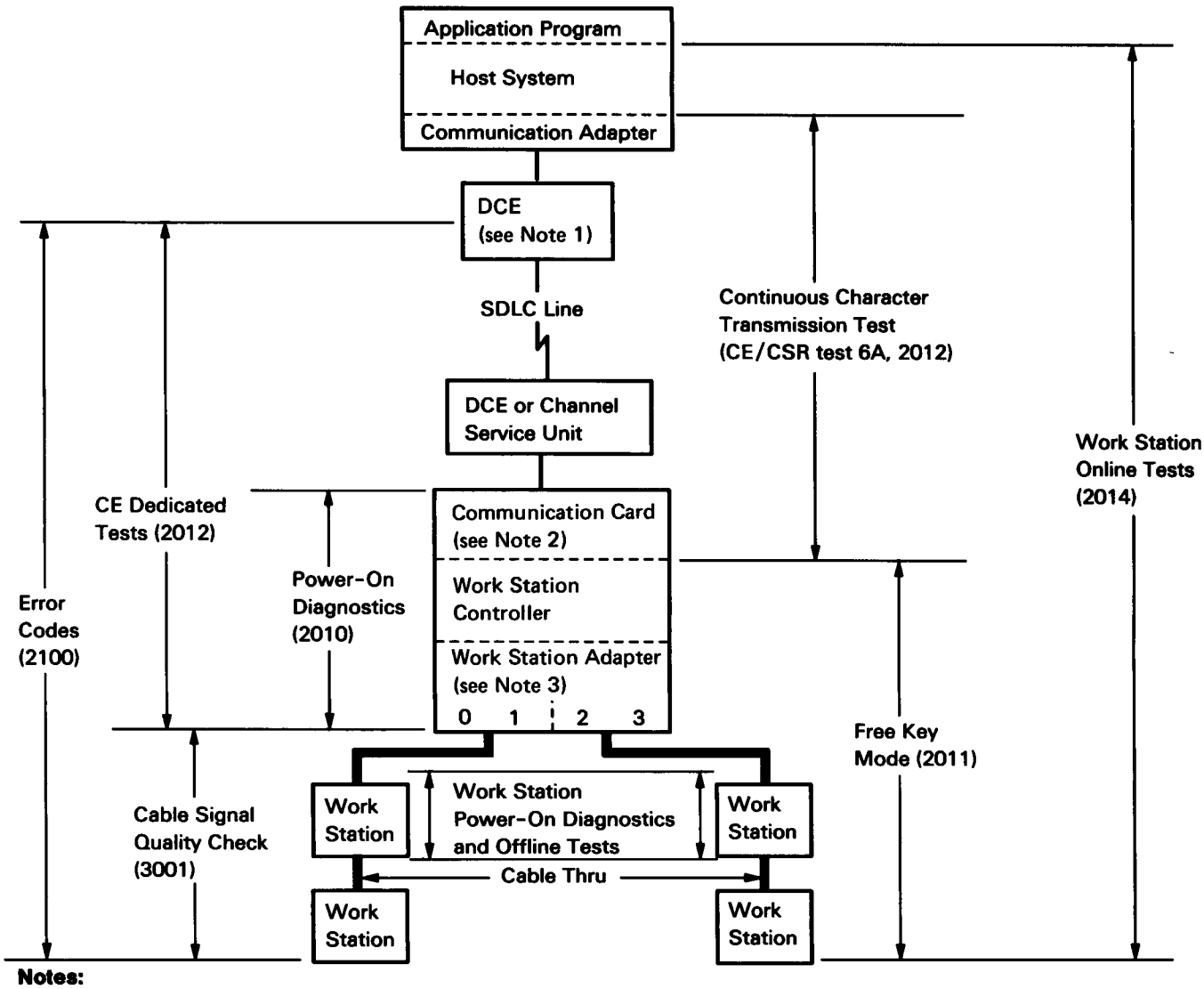

Notes:

1. The host system DCE may be an integrated modem/DCE, an external modem/DCE, a DDSA, or an external digital DCE.
2. The communication card may be EIA, DDSA, or XLCA.
3. Base machines have ports 0 and 1; machines with the Extended cluster feature also have ports 2 and 3.

2003 Test Request Selection

The test request function is a 2-key operation that permits you to perform the work station controller CE/CSR tests (2012, 2013), the configuration procedures (0460), the communication wrap tests (1030), or the online tests (2014).

The two keys involved in the operation vary, depending on the type of display station attached to the work station controller. The following figures show the keyboard layout for the 5251, 5291, 5292, 3179 Model 2, 3180 Model 2, 3196, 5150, 5550, 5551, and IBM Enhanced Keyboard. The two test request function keys are identified by numbers which also show the order in which the keys should be pressed; press 1 , then press 2 . The actual keytop characters on your keyboard may not be the same as the ones shown in the figure due to language differences.

5251 Keyboard

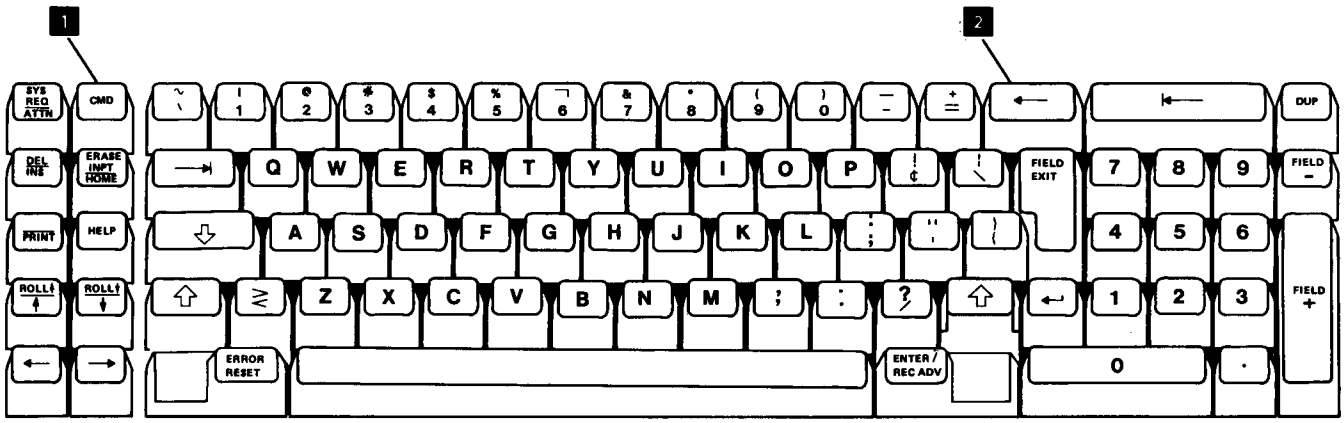

5291 and 5292 Keyboard

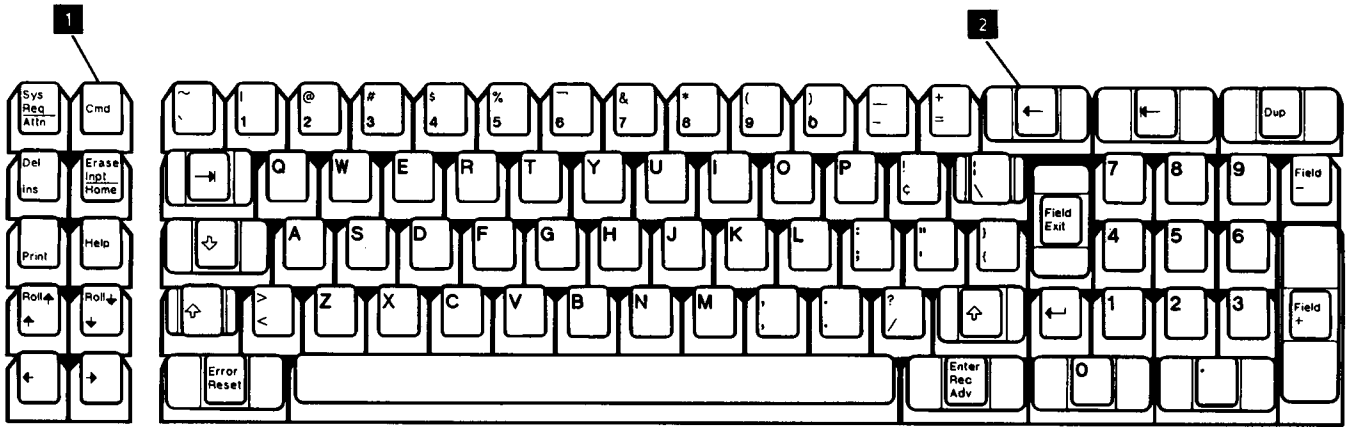

3179, 3180, and 3196 Keyboard

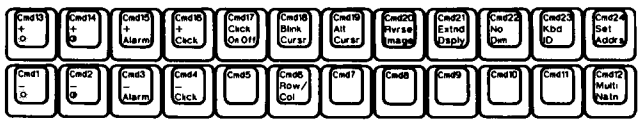

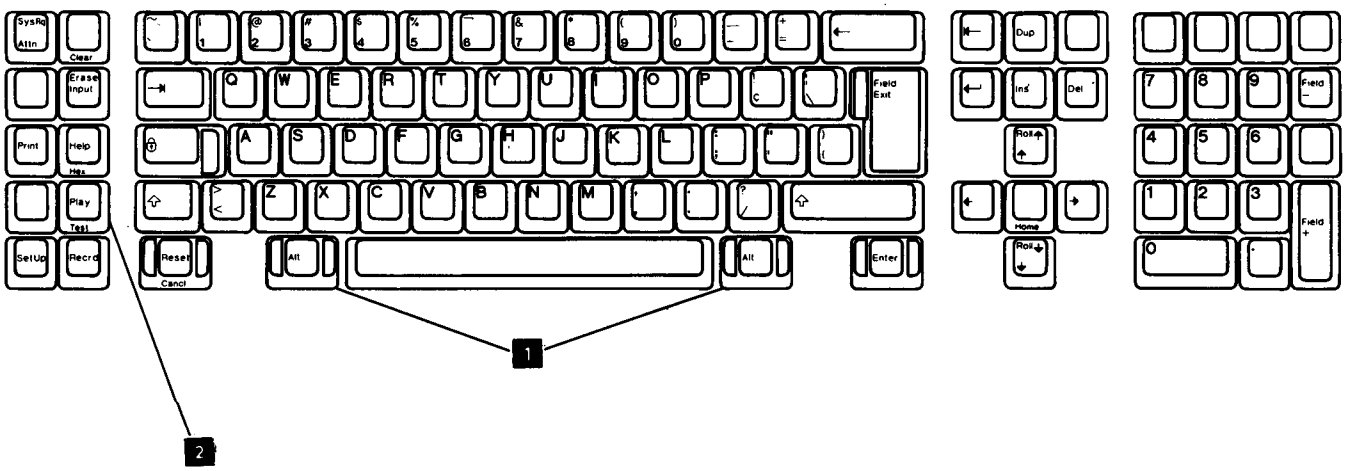

Press and hold the Alt key **1** while pressing the Test key **2**.

5150 (PC) Keyboard

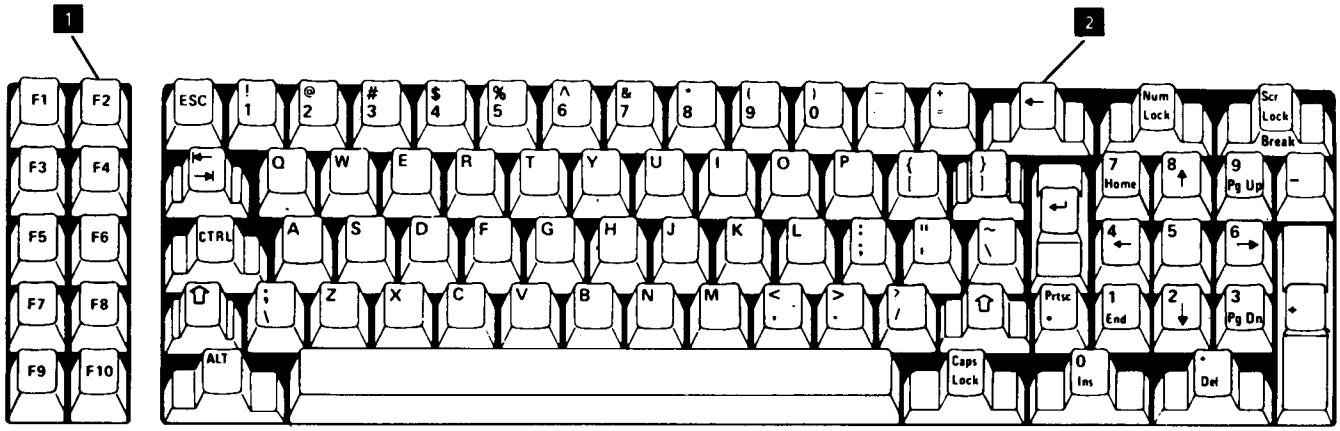

5551 Keyboard

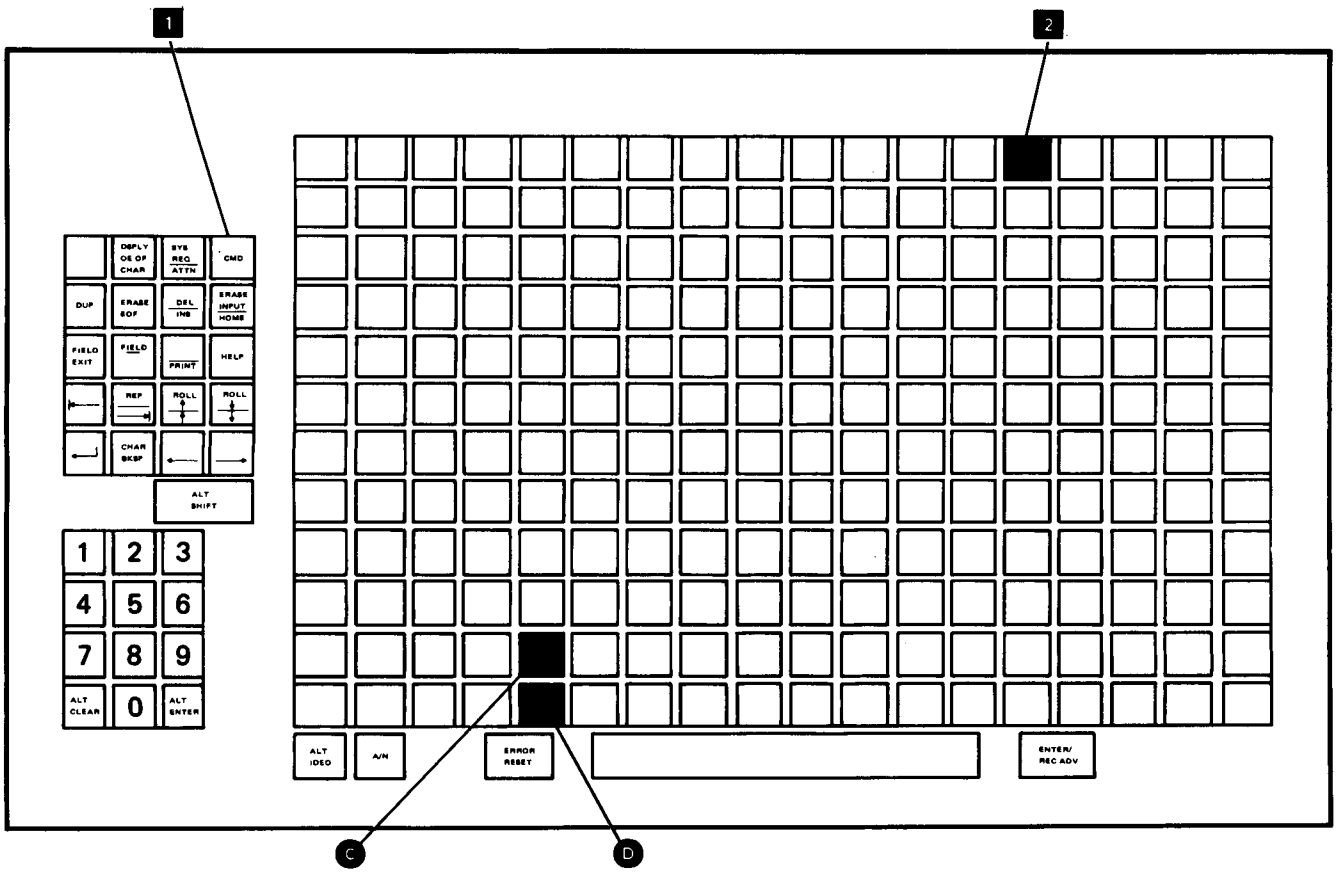

IBM Enhanced Keyboard

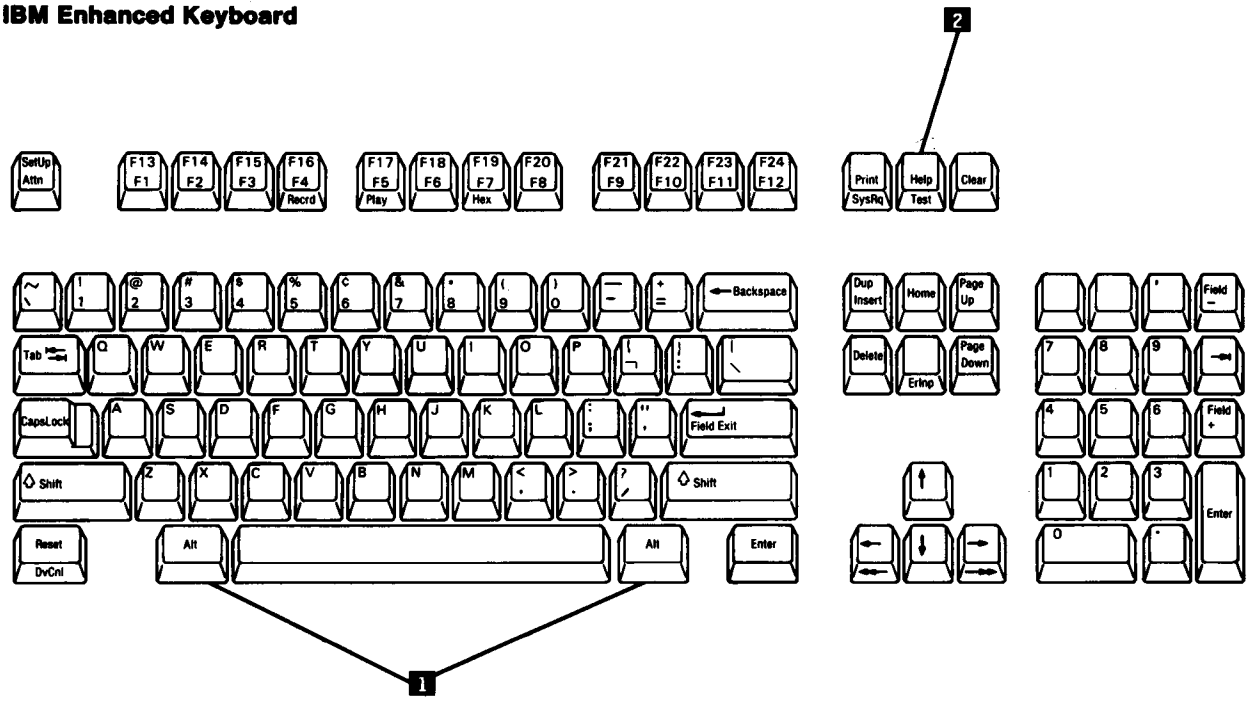

Press and hold the Alt key **1** while pressing the Test key **2** .

5550 Keyboard (Type 1), Hangeuel

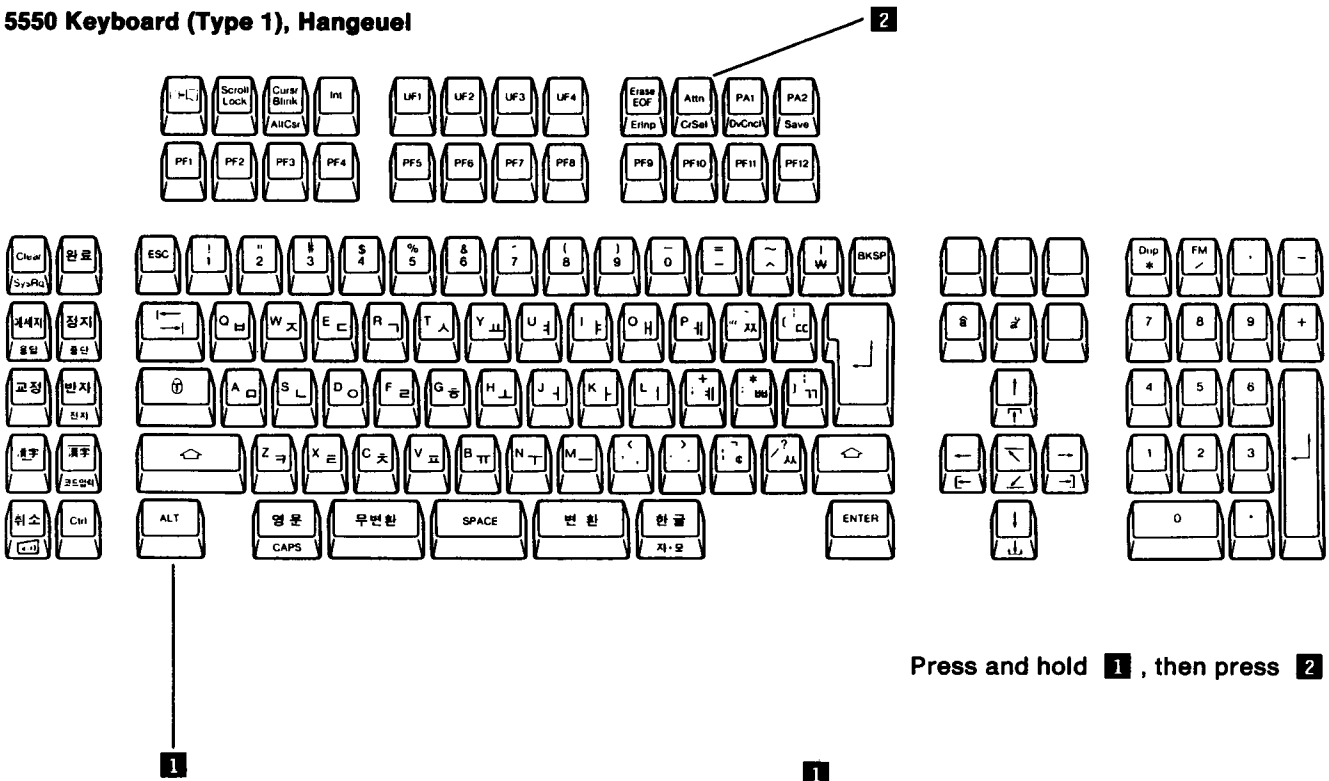

Press and hold 1 , then press 2 .

5550 Keyboard (Type 1), China

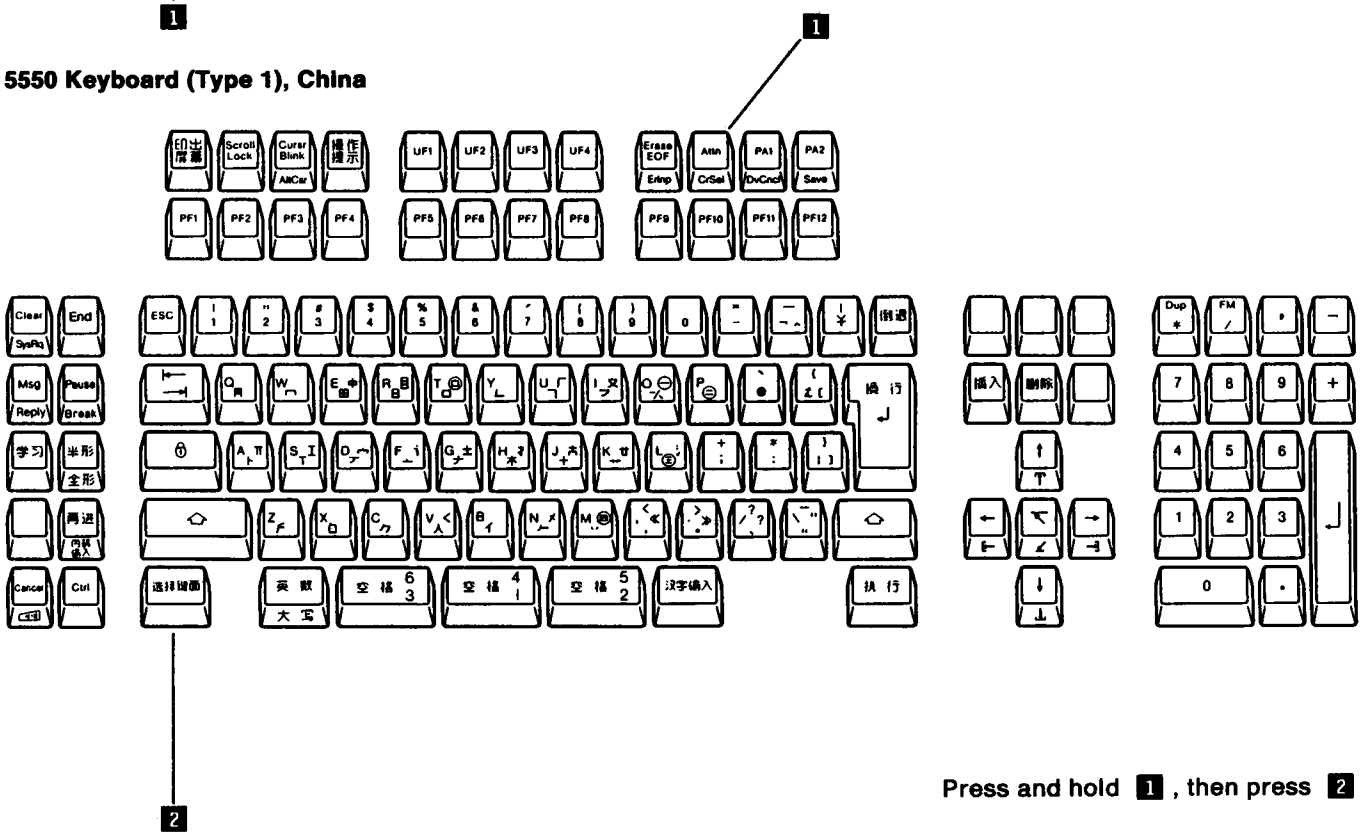

Press and hold 1 , then press 2 .

5550 Keyboard (Type 1), Peoples' Republic of China

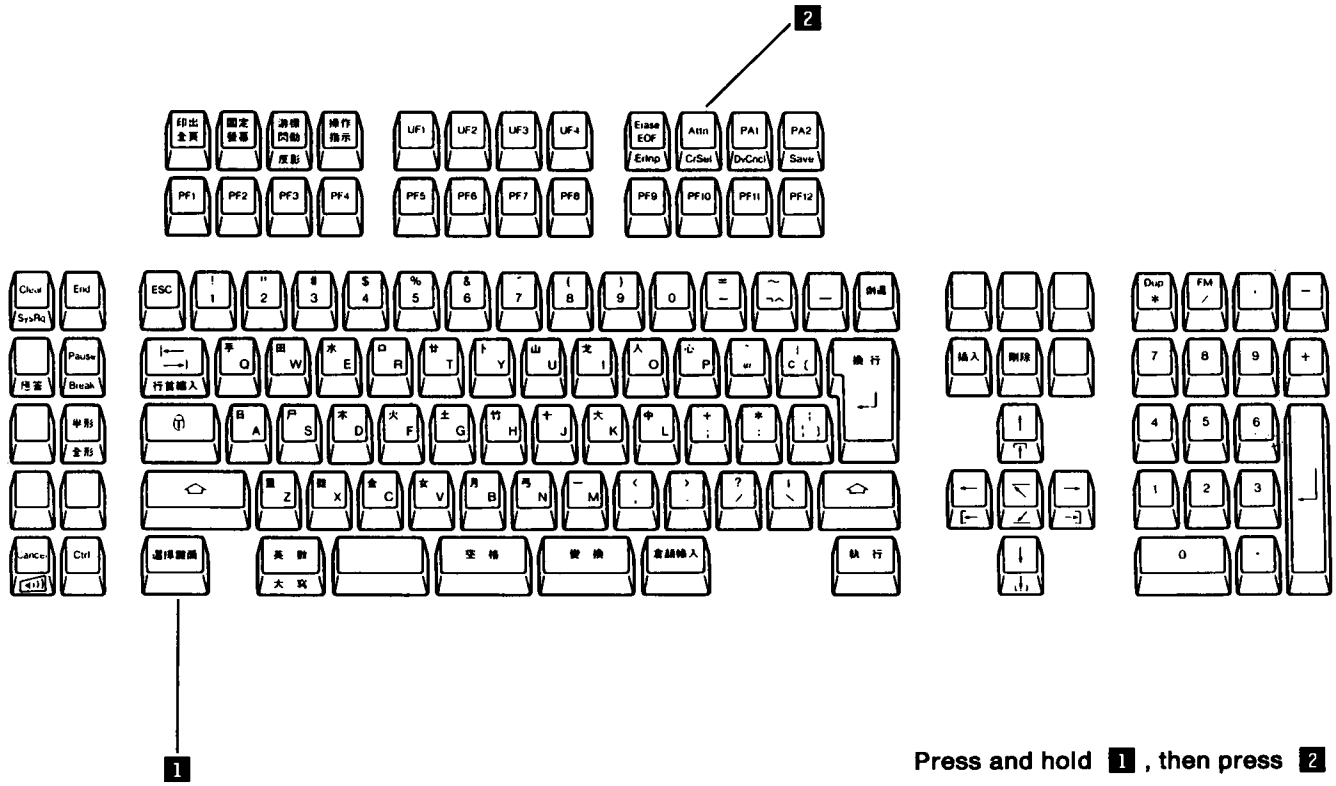

For your convenience, a form for comments is in the back of this publication.

2010 Power-on Diagnostics

Power-on diagnostics perform internal tests on all major parts of the work station controller.

If an error is detected during power-on diagnostics, the error condition is indicated by the status of the front panel LEDs and/or by an error code displayed on the attached display stations.

Some displayed error codes will specify that the error can be reset and operation continued without using the failing area or feature.

For most errors which cause a displayed error code, the error can be reset and dedicated diagnostic tests selected.

When power-on diagnostics complete without an error detected, then normal operation can start or additional tests made such as use of the free key mode (2011) or the work station online tests.

The following pages show the sequence of data flow for the power-on diagnostics. The status of the front panel LEDs on the work station controller are shown in corresponding sequence with the data flow.

Correct Operation

The following information describes how the work station controller should normally function at power on. This description assumes that the work station controller configuration has been checked and is correct. For a description of the configuration screen and how to change it, see section 0460.

1. Set the test switch to Normal.

2. Power on the work station controller.

   All the LEDs on the work station controller should turn on for approximately one second during the lamp test. After one second, all the LEDs except the Power LED are reset to off. The **Power LED** should remain on.

   At this time, the power-on diagnostics start and test the logic in the following sequence:

   - Microprocessor (MPU)
   - RAM Storage (base 16K)
   - ROS Storage (base 16K)
   - Feature ROS
   - Twinaxial Adapter
   - Communication Adapter
   - Battery-powered storage (CMOS) CRC check

   When all of the logic has been checked and no errors were found, the **Ready LED** is turned on.

   The **Workstation Active LED** is turned on now if an attached work station is online and responding to poll commands.

   At the work station, a System Available or similar indication should now be on and, if a display station, the cursor should be located in the top left corner of the display screen. The display station should now be in the Free Key mode (2011).

   The work station controller is now ready to communicate with the host system. Perform the following steps to start communication:

   1. Ensure that the external communication cable is connected to the modem/DCE.

   2. Power on the modem/DCE.

   3. Request the host system to *vary on* the work station controller.

      The host system now begins polling the work station controller. When the work station controller detects 10 flags, the **Com Line Sync LED** starts blinking.

   The work station controller is now operating normally and you may start normal operation with the system.

Power-On Diagnostics Flowchart
(Sheet 1 of 2)

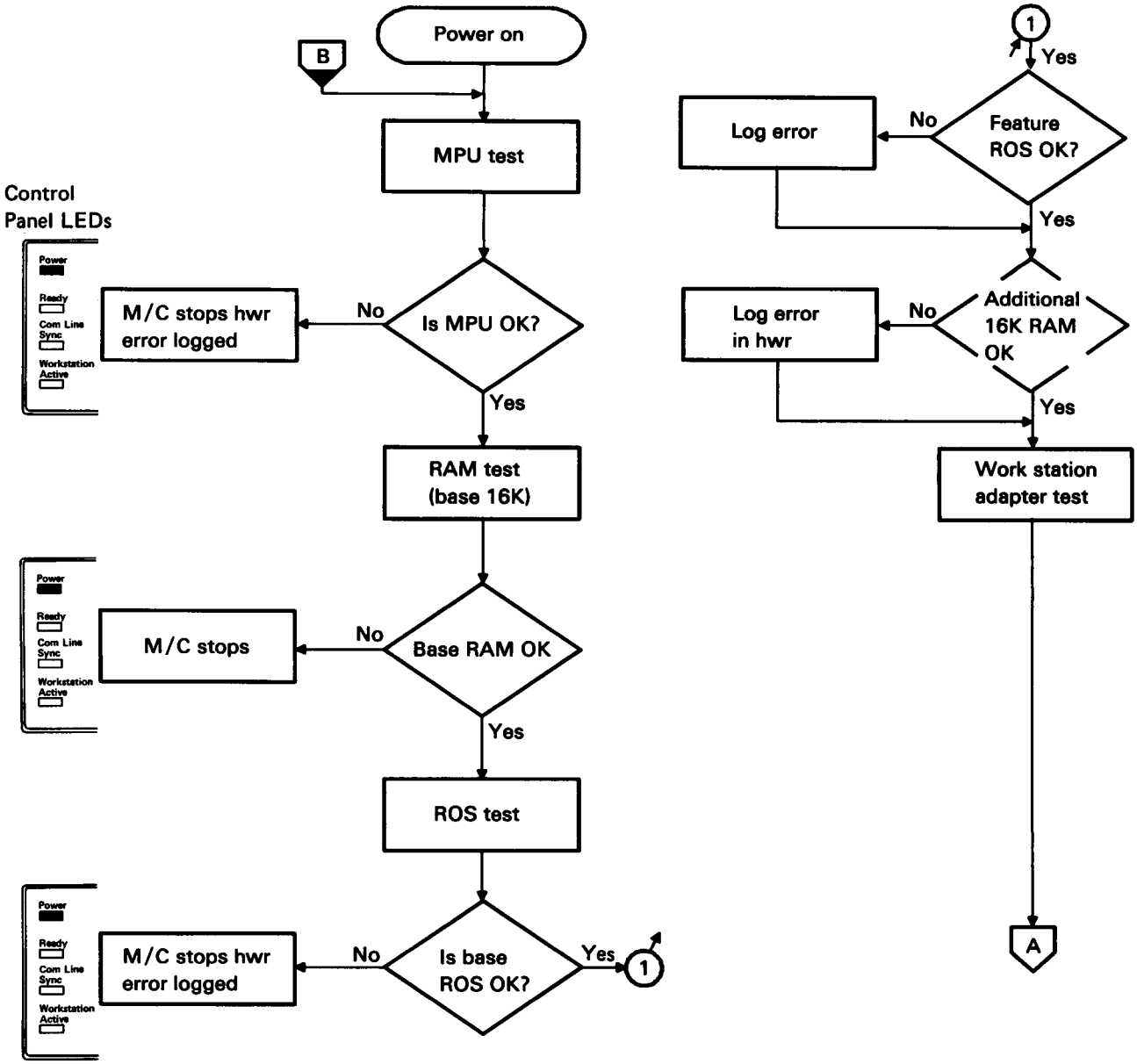

Power-On Diagnostics Flowchart
(Sheet 2 of 2)

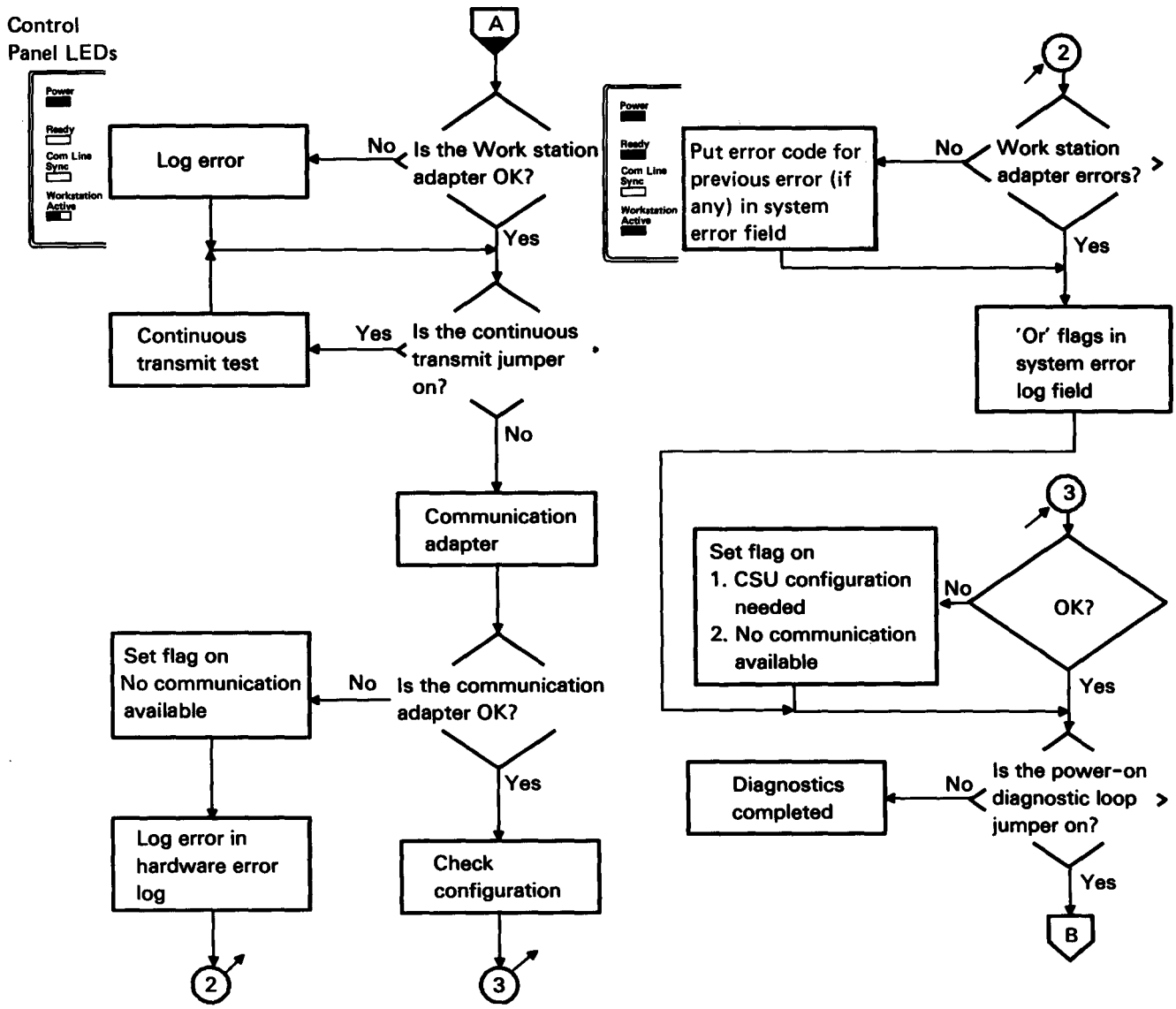

Legend:

On

Off

May be on, off or blinks during test

For your convenience, a form for comments is in the back of this publication.

2011 Free Key Operation

Free key mode permits information to be keyed from the keyboard and displayed on the display screen without the work station controller in session with the host system. This mode is started right after power-on diagnostics have been completed correctly and permits testing the keyboard and other functions of the attached display stations. The attached display stations remain in free key mode until the host system transmits a sign-on screen.

The following function keys are not tested in free key mode and, if pressed during free key operation, cause a 0099 error code to be displayed.

Print

Help

Roll Up

Roll Down

Enter/Rec Adv

Test Request (backspace 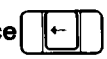
or yen key

Attn

Command function keys (Cmd, 1 through 24, see note)

Errors can be reset with the Error Reset key.

When the work station controller is attached to a host system that causes a sign-on screen to be displayed immediately after power-on diagnostics complete, a type of free key mode is available in a field of the prime option menu of the Online Tests. (See the display station maintenance information library.)

Note: See the display station keyboard template or operator's manual for identification of the command function keys.

2012 CE/CSR Tests – Dedicated Mode (Tests 61 through 6F)

(Sheet 1 of 8)

The CE/CSR tests can be run from any display station (usually the primary display station) attached to the work station controller. In the dedicated mode, the internal diagnostics are used without a host system.

Also, in the dedicated mode, a loop-on-error function permits a CE/CSR test to start over when an error occurs or when the end of the CE/CSR test is reached. (This function is described in the flowchart for dedicated mode.)

Before you start the dedicated mode test, terminate all jobs on the work station controller and on any attached work stations.

Test Procedure

CAUTION
When you start a CE/CSR test, all sessions are destroyed if they are not terminated on the work station controller and on all attached work stations.

1. At the work station controller, power off the work station controller and set the test switch to Normal.

2. Power on the work station controller and an attached display station.

3. Wait approximately 10 seconds for the power-on diagnostics to complete. Reset any error condition that occurs.

4. At the work station controller, set the test switch to Test.

5. At the display station, perform one of the following steps:

   - If your display station is a 5251, 5291, or a 5292, press the Cmd key, the test request key , and the D key.
   - If you have a 3179, a 3180, or a 3196 display station, press and hold the Alt key while pressing the Test key, then press the D key.
   - If your keyboard is different from those in steps a and b, refer to section 2003.

   A diagnostic display screen will appear containing a test number in the lower left-hand corner of the screen.

6. The cursor will be located under the test number field. Change the number to the desired test number by using the up or down cursor movement key.

7. Test option selection: Continuous Loop or Loop On Error. The selection is made by placing the cursor under the test option field and using the cursor up or down movement keys to select a C for continuous or an E for loop-on-error (a C is the default entry).

   - Continuous Loop: Permits the test to run continuously until an error is detected. When an error is detected, the test is stopped and an error code is displayed.
   - Loop On Error: Permits the test to run continuously. When an error is detected, the error code is displayed and the test restarts automatically.

8. Press the Enter key to run the test.

   Note: You know the test is running by observing that the Test Run Counter on the display screen is counting. When the test stops, the Test Run Counter stops counting, and the Test Code field records the test number (first 2 digits) and the test results (last 4 digits). The last 4 digits will be all zeros if no errors were detected.

9. To stop a test, press the Reset key. If you press the Reset key a second time, a CE0000 will be displayed and you may select another test.

10. To return to normal operation, press the Reset key and set the test switch on the work station controller to Normal. Power off and then power on the work station controller.

Note: 586X modems do not support LPDA commands for local or remote loopback. Local modem wrap is supported in the non-LPDA mode only for 586X modems.

Dedicated Mode Display Screen

(Sheet 2 of 8)

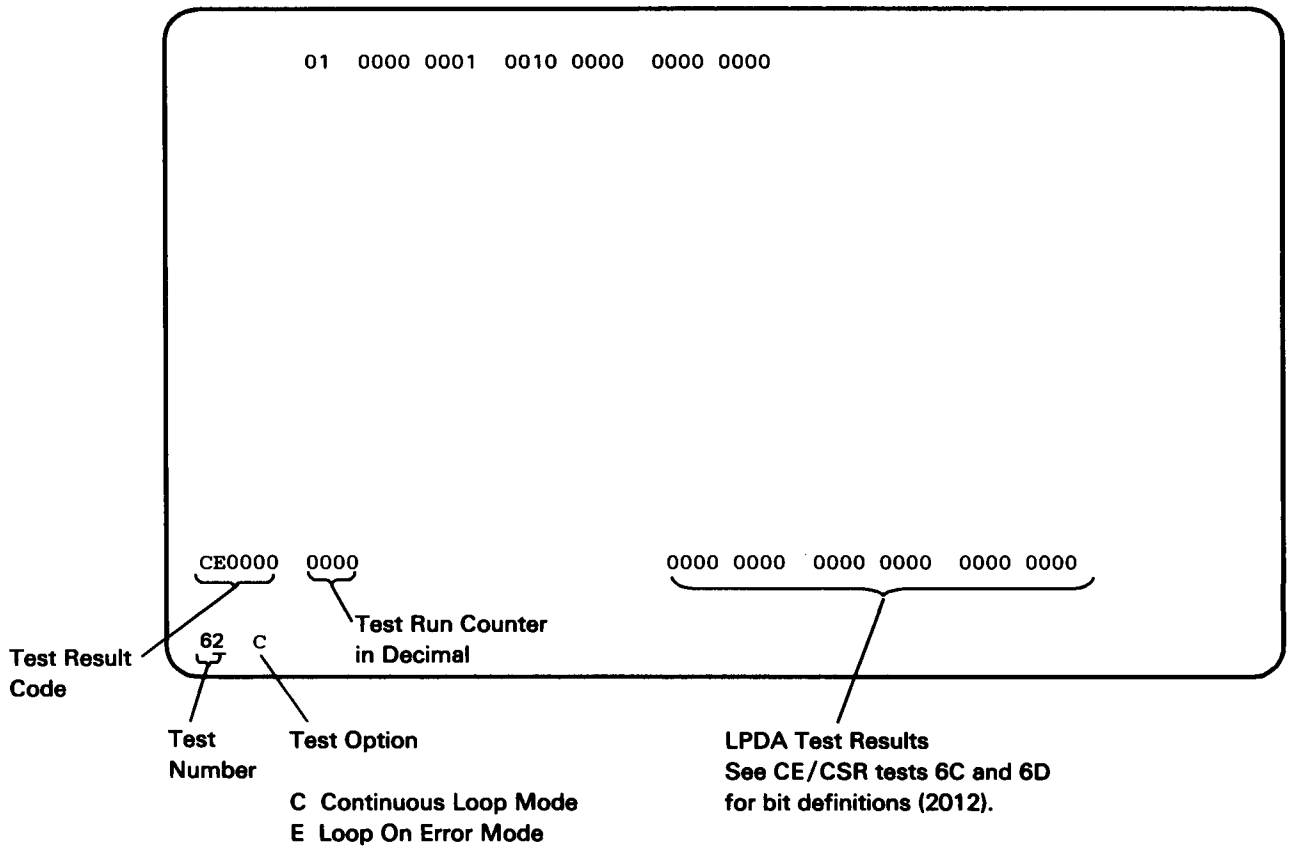

CE/CSR Test - Dedicated Mode Flowchart

(Sheet 3 of 8)

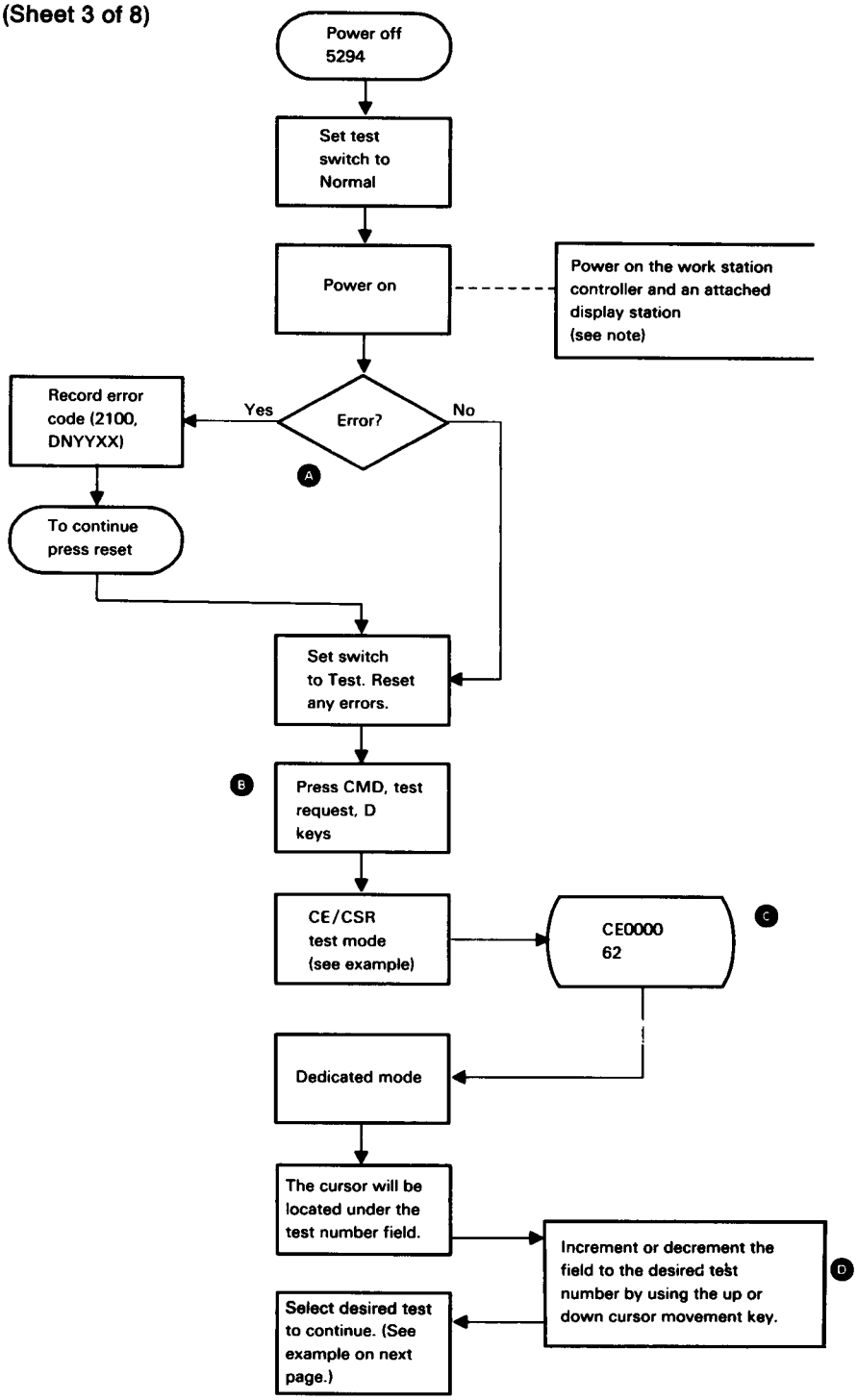

Note: Power-on diagnostics for the work station controller take approximately 10 seconds.

Example of a Typical CE/CSR Test Operation

(Sheet 4 of 8)

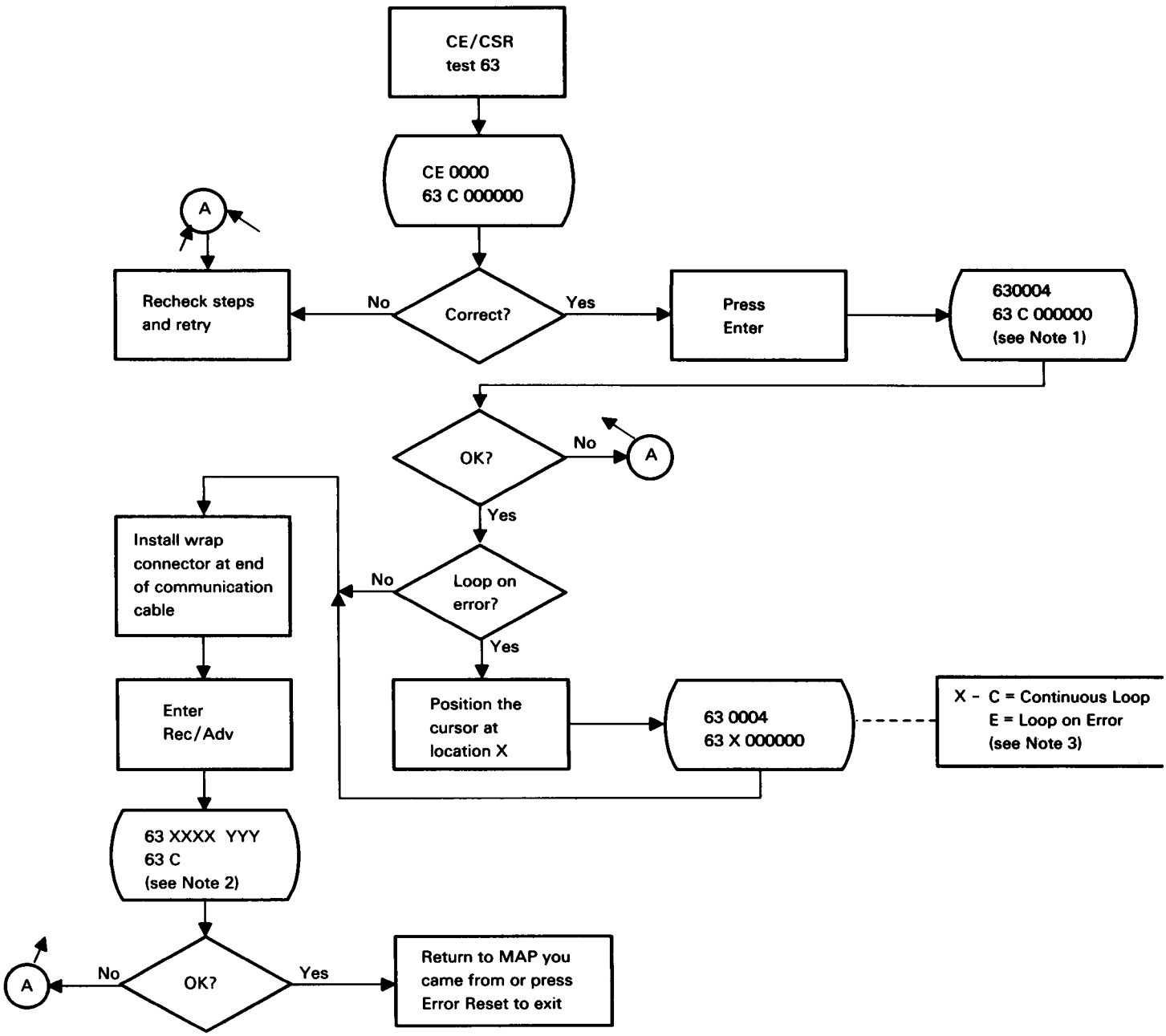

Notes:

1. 630004 is a prompt. For this test, it will have you install a wrap connector at the end of the communications cable.
2. XXXX = Error code if other than 0000.
3. Use the up or down cursor movement keys to change options.
4. Error codes will be used in MAPs.

Test Number	Description
61	Customer-Run Problem Determination Test: This test automatically runs tests 62, 63, 64, and/or 66 as needed to locate a failure. If an error occurs or some action is needed, an error/prompt code is displayed. The codes associated with this test are defined below. **Code** / **Test Level** / **Description** 618XXX / 3 / Cable wrap test failed. 618003 / 6 / Communication network or the host system DCE failed. 610004 / Prompt. Attach an external communication cable wrap connector and press Enter. 610005 / Prompt. Set up for a local modem/DCE loopback test (64) and press Enter. A 618XXX error code at this time means the modem/DCE failed. 610006 / Prompt. Set up for remote modem/DCE wrap test (66) and press Enter. A 618XXX error code at this time means the communication line or remote modem/DCE failed. 610007 / Test sequence has ended. The meaning is determined by the test level code described below. 610007 / 3 / Work station controller is good. Local loopback is not possible for this configuration or the local loopback failed. 610007 / 4 / Work station controller is good. The local loopback test is good. A remote loopback test is not possible for this configuration. 610007 / 6 / Work station controller is good. The attached modem and the communications network is good. The remote loopback test is good. For more information on communication error codes, see section 2160.

Figure 1-4 (Part 1 of 4). CE/CSR Test Description

Note: 586X-1, 5868-51, and 5868-61 modems do not support LPDA commands for local or remote loopback. Local modem wrap is supported in the non-LPDA mode only for 586X-1, 5868-51, and 5868-61 modems.

(Sheet 6 of 8)

Test Number	Description
62	Communication Card Test: (Wrap level 2) Checks for correct operation of the signal lines at the planar to communication card interface. The test automatically adapts to the type of communication card installed: EIA, DDSA, or XLCA.
63	Internal/External Communication Cable Wrap Test: (Wrap level 3) Checks the interface lines from the communication card to the communication connector on the work station controller I/O panel (wrap 3B) or to the end of the external communication cable (wrap 3A). The test automatically adapts to the type of communication card installed: EIA, DDSA, or XLCA. Code 630004 is a prompt to install a wrap connector.
64	External Modem/DCE Test: (Wrap level 4) Tests the communication cable and part of the attached modem/DCE by transmitting signals on the 'transmit data' line while the 'test control' line is active. The 'test control' line causes the transmit signal to be wrapped to the 'receive data' line. DTE and DCE control lines are used to simulate normal operations. This test can be used with IBM 3833, 3834, 3863, 3864, 3865, 3872, 3874 (see Note 1), and 3875 (see Note 2) modems or modems/DCEs with local loopback (analog loopback) function and a 5294 Control Unit with the EIA communication feature. Code 640005 is a prompt to set the modem/DCE to local loopback. **Notes:** 1. If the IBM 3874 fails to equalize, the test may not run unless the Test/Operate switch is set to the T2 position. 2. If an IBM 3875 is used on a multipoint network, set the Test/Operate switch to the T2 position to prevent interfering with other secondary stations. 3. To run this test with the 5865, 5866, 5868-51, or 5868-61, configure the modem for non-LPDA.
65	External Modem/DCE to Line Interface Test: (Wrap level 5) Check all the work station controller communication hardware, the attached external modem/DCE, and the modem-to-communication line cable. Code 650006 is a prompt to install a wrap connector (part 8331287) at the end of the modem-to-line cable.
66	Remote Modem/DCE Test: (Wrap level 6) Checks the work station controller communication hardware, the link to the remote (host) modem/DCE, and the remote and local DCEs. Code 660006 is a prompt to set the host modem/DCE for remote loopback.
For more details on tests 62 through 66, see reference 1030.	

Figure 1-4 (Part 2 of 4). CE/CSR Test Descriptions

Note: 586X-1, 5868-51, 5868-61 modems do not support LPDA commands for local or remote loopback. Local modem wrap is supported in the non-LPDA mode only for 586X-1, 5868-51, and 5868-61 modems.

(Sheet 7 of 8)

Test Number	Description
67	Continuous Control Line Activate Test: The modem/DCE control lines are held activated.
68	Continuous Control Line Deactivate Test: The modem/DCE control lines are held deactivated.
69	Line Speed Test: Causes the line speed to be displayed. If no clock is available,an error code is displayed and dashes (--) are displayed in place of the speed data.
6A	Continuous Transmit Test: Causes the continuous transmission of 3 hexadecimal characters. Any character from 0 to F may be entered by the CE/CSR in the Test Data field of the dedicated mode display screen. If none are entered, the characters 7E7E7E are transmitted by default.
6B	Continuous Receive Data Test: Causes the first 3 characters received in each receive data block to be displayed in the Test Data field.
6C	LPDA Local Modem Self-Test: Causes the attached 386X modem to perform a self-test and to report the results. The results are displayed on the dedicated mode display screen and are coded as follows: Byte 1, Bits 0=2 Identifies the modem type dependent on the setting of type 2, bit 7 0=2 If byte 2, bit 7=0, then 100=3863 101=3833 010=3864 110=3834 001=3865 0=2 If byte 2, bit 7=1, then 000=5865-2 100 = 5865-1 010=5866-2 101 = 5868-51 001=5868-52 110 = 5866-1 011=5868-62 111 = 5868-61 3=0 Nonswitched line =1 Switched line 4=0 Point-to-point =1 Multipoint 5=0 Local speed control =1 Remote speed control 6=0 Normal ready-for-send delay =1 Exception ready-for-send delay 7=0 Full carrier sensitivity =1 Low carrier sensitivity Byte 2, Bit 0=1 Modem test requested to execute the 386X, 386X, or 586X modem self-test and record the results 1=1 Modem test failed 2=1 Modem tone test failed 3=1 Modem feature card error 4=1 Modem receive card error 5=1 Modem receive external card error 6=1 Modem front end card error 7=0 383X or 386X type modem =1 586X type modem Byte 3, Bit 0=0 TAC/IPC not installed =1 TAC nonswitched line, IPC switched line 1=0 Not installed =1 Four-wire switch network backup installed 2=0 Not installed =1 Data multiplexing installed 3=0 Not installed =1 Fan out installed (No fan out for 5868-51 and 5868-61) 4 through 7=Microcode EC level

Figure 1-4 (Part 3 of 4). CE/CSR Test Descriptions

Note: 586X-1, 5868-51, and 5868-61 modems do not support LPDA commands.

(Sheet 8 of 8)

Test Number	Description
6D	LPDA Local Modem Status Report: This test activates the 'Test Control 1' line and transmits a test request frame requesting the status of the attached 383X, 386X, and 586X modem. The test results are displayed on the dedicated mode display screen. The results are coded as follows: Byte 1, Bit 0 through 5: Hit count 6=1 Modem/DCE initialization occurred 7=1 Signal carrier was lost in data mode (point-to-point only) Byte 2, Bit 0 through 3: Quadratic error 4=1 Remote modem/DCE power lost (with TAC installed only) 5=0 Half speed =1 Full speed 6=1 Four-wire switch network backup (SNBU) connection obtained (World Trade only) Byte 3, Bit 0 through 7 receive level for 383X, 386X, and 586X modems. Only late models of 386X modems use this byte. Bit 0=0 383X, 386X 0=1 M586X modem 1 reserved 2 through 7: receive level This is a binary value indicating the receive level relative to -60 dBm. To determine the actual receive level, algebraically add the value in bits 2 through 7 to -60 dBm. Examples: 1. binary = 101101 = 1+4+8+22=45 45 + (-60) = -15 (actual receive level in dBm) (-14 to -18 is typical for a non-switched line). 2. binary = 100001 = 1+32=33 33 + (-60) = -27 (actual receive level in dBm) (-22 to -28 is typical for a switched line). Byte 3, Bits 0 through 7: Not used
6E	Continuous DDSA Test: This test places the DDSA in test mode by activating the 'Test Control 1' line to enable the host system to perform a loopback test. The jumper at position E on the DDSA communication card must be off (see 1051 for jumper location).
6F	Concurrent Test Access: Permit use of all the concurrent modem screens while in dedicated mode.

Figure 1-4 (Part 4 of 4). CE/CSR Test Descriptions

Note: 586X-1, 5868-51, and 5868-61 modems do not support LPDA commands for local or remote loopback. Local modem wrap is supported in the non-LPDA mode only for 586X-1, 5868-51, and 5868-61 modems.

For your convenience, a form for comments is in the back of this publication.

2013 CE/CSR Tests – Concurrent Mode (CE/CSR Tests C1, C2, C3)

In concurrent mode, sessions with the host system are not destroyed when a CE/CSR test is correctly started. Sessions will execute normally while any of the concurrent mode tests are being used. In this mode, the tests can be run from any display station (usually the primary display station) attached to the work station controller. One display station is used to monitor the work station controller function while the remaining work stations and the work station controller are in session with the host system.

Test Description

The concurrent mode tests permit you to monitor the communications interface, error log entries, and storage location while customer operations are running. It also permits you to display all the error logs.

Common Screen Information

The top lines of the screens for tests C1 and C2 contain the same information. If test C1 and/or C2 was run just before test C3, then the C3 screen also displays this common information. See the description for the top line of screen C1 at the end of this section for a definition of the common fields.

Test C1

This test supplies a screen that shows configuration data, EC status of ROS and EC download data, error log buffer and hard error (HE) log data, and work station interface error counter contents.

Test C2

This test supplies a screen that shows the SDLC statistics counters, the permanent link error (PLE) log contents, the SDLC or X.25 status byte, the SNA status byte, and the EIA register contents.

Test C3

This test supplies a screen that shows the contents of main storage (RAM). Any address from 00000 through 1FFFF may be displayed.

Sample screens for each of the tests are shown on pages following the test procedure.

CE/CSR Test - Concurrent Mode Flowchart

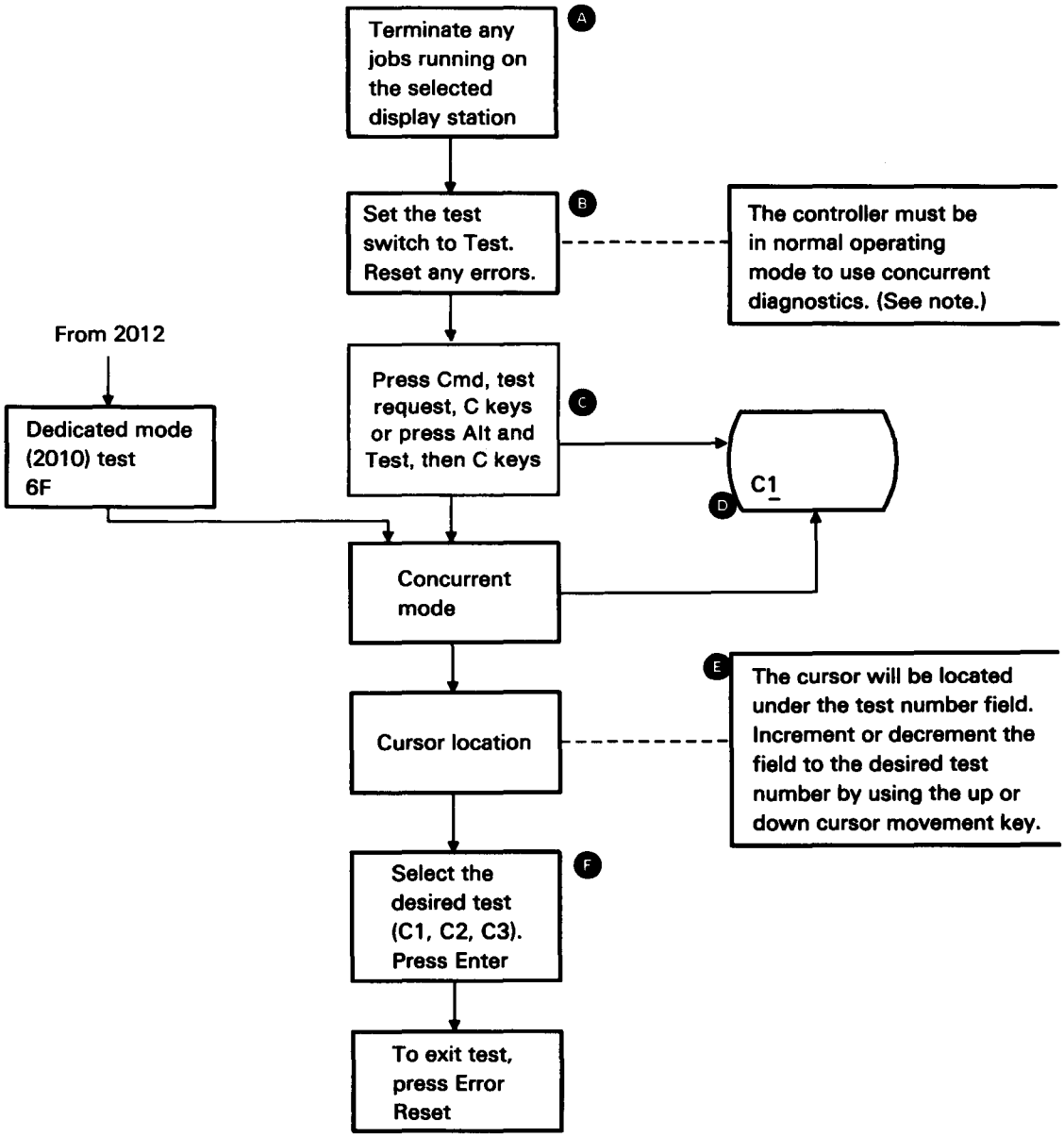

Note: The work station controller power must be turned on with the test switch in the Normal position and the controller should have completed its power-on diagnostics before you select the concurrent mode.

Test Procedure

CAUTION
It is important to execute concurrent tests correctly, as described in the following procedure; if not, ***all sessions can be destroyed.***

Ⓐ Select an attached display station, terminate job, and vary off (terminate session) to that display station.

Ⓑ At the work station controller, set the test switch to Test.

Ⓒ At the display station, perform one of the following steps:

- If your display station is a 5251, 5291, or a 5292, press the Cmd key, the test request key , and the C key.
- If your display station is a 3179, a 3180, or a 3196, press and hold the Alt key while pressing the Test key and then press the C key.
- If your keyboard is different from those in steps a and b, refer to section 2003.

Ⓓ A diagnostic display screen will appear containing a test number in the lower left-hand corner of the display.

Ⓔ The cursor will be located under the test number field. Change the number to the desired test number by using the up or down cursor movement key.

Ⓕ Press the Enter key to display the first test screen.

The status information on the screen is updated each time the Enter key is pressed.

Repeat steps E and F to select another display screen.

Ⓖ Restart the session by pressing the Error Reset key and varying on (establishing session) to that display station.

Concurrent Mode Display Screens

The following display screens are typical for CE/CSR concurrent mode tests C1, C2, and C3.

C1 Screen

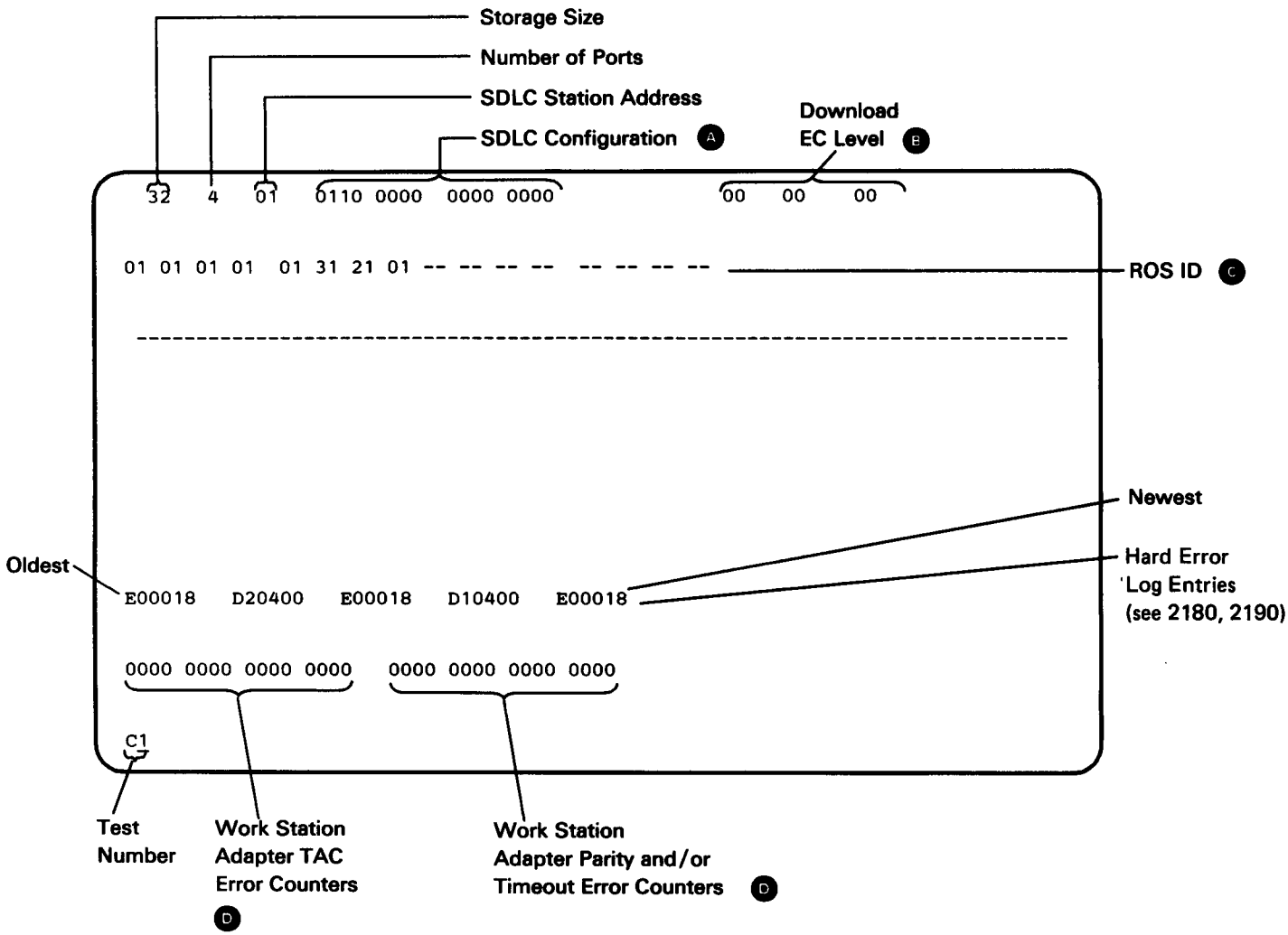

C1 Screen

Ⓐ SDLC Configuration

See the following pages for X.25 and X.21 configuration.

Communication Configuration (Default is 0)

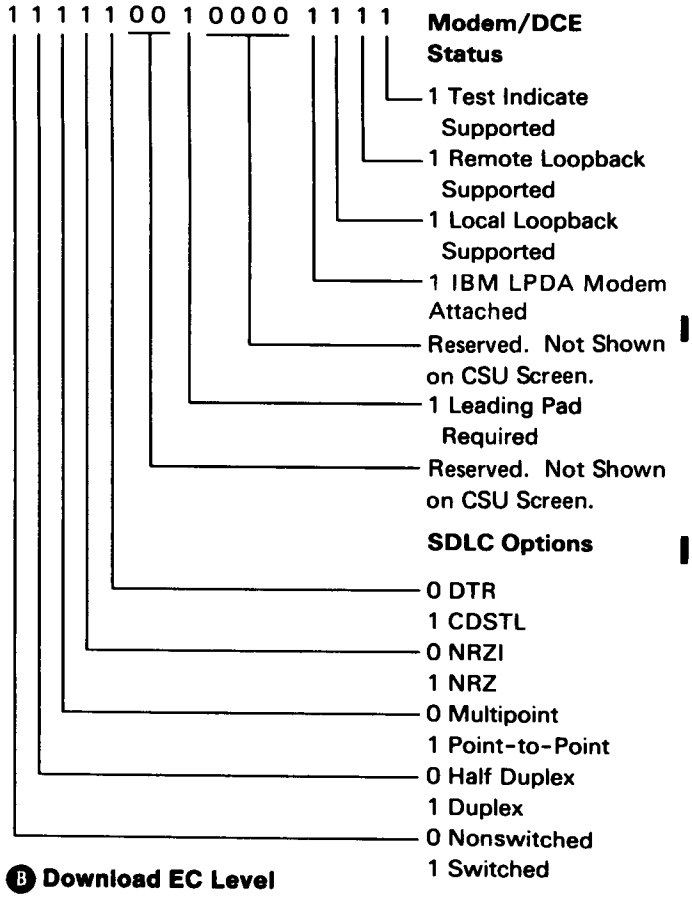

Ⓑ Download EC Level

This 2-digit code reflects the downloaded EC level. These digits are displayed as follows:

XX XX XX XX XX XX (Note 1)
Base EC level
World Trade Translate level
Expanded Function or Extended Function EC level (Note 2)
X.25 EC level (Note 2)
X.21 EC level (Note 2)
Text Entry Assist (Note 2)
Enhanced Keyboard Feature (Note 2)

Notes:

1. These digits may be OO-FF.
2. This feature may not be installed; therefore, no EC level is installed.
3. Extended Function A feature = 35
   Expanded Function feature = 32
4. Text Entry Assist = 616161
   Text Entry Assist "A" = 62626262

Ⓒ ROS ID

The 2-digit codes are formatted as follows:

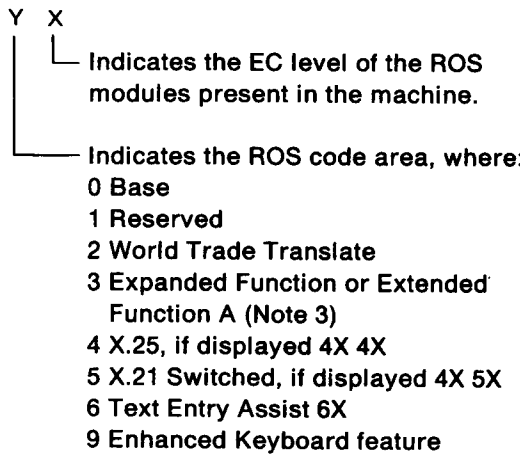

Ⓓ Error Counters

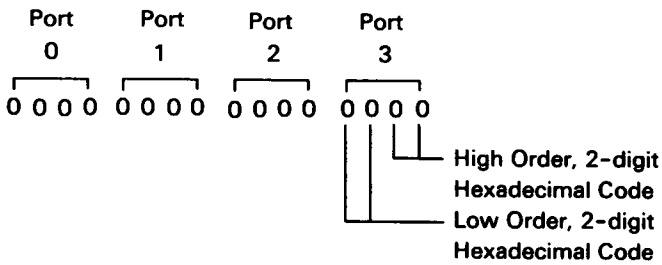

The count sequence for each of the four counters follows:

The first hexadecimal count of 16 errors goes into position A, the second count of 16 overflows into position B, the third count of 16 overflows into position C, and the fourth count of 16 overflows into position D.

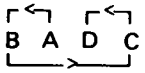

For example, a hexadecimal count of 01AF will appear as AF01.

C1 Screen (continued)

Ⓐ X.25 Configuration

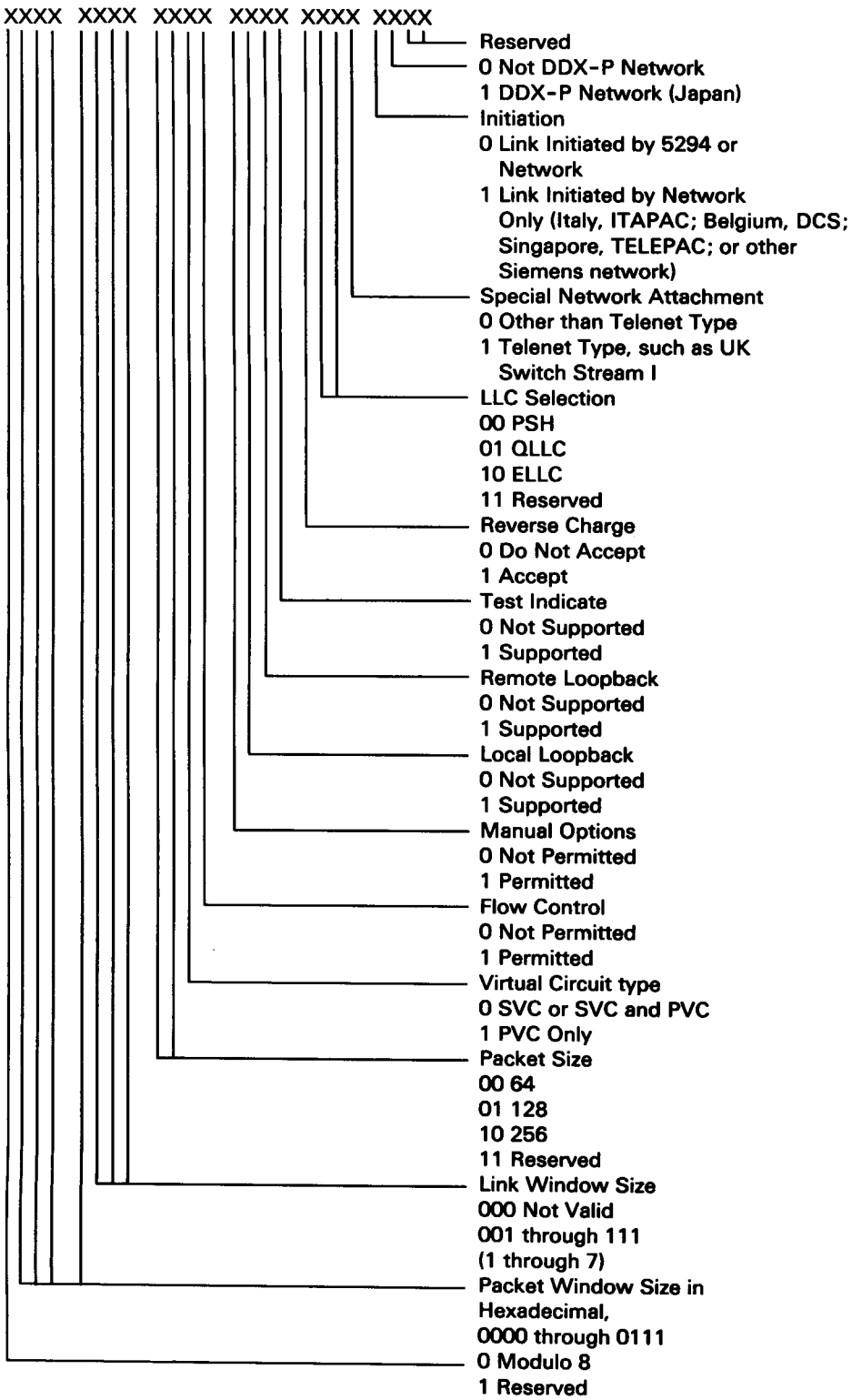

C1 Screen (continued)

Ⓐ X.21 Switched Screen

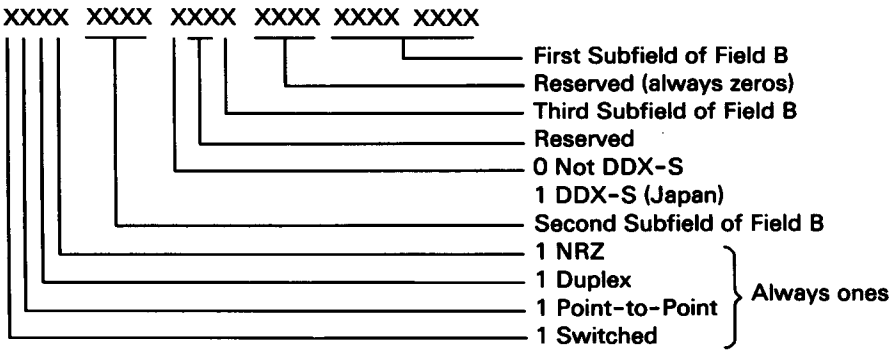

For further configuration information, see *IBM 5294 Control Unit Setup Procedure*, GA21-9369.

C2 Screen

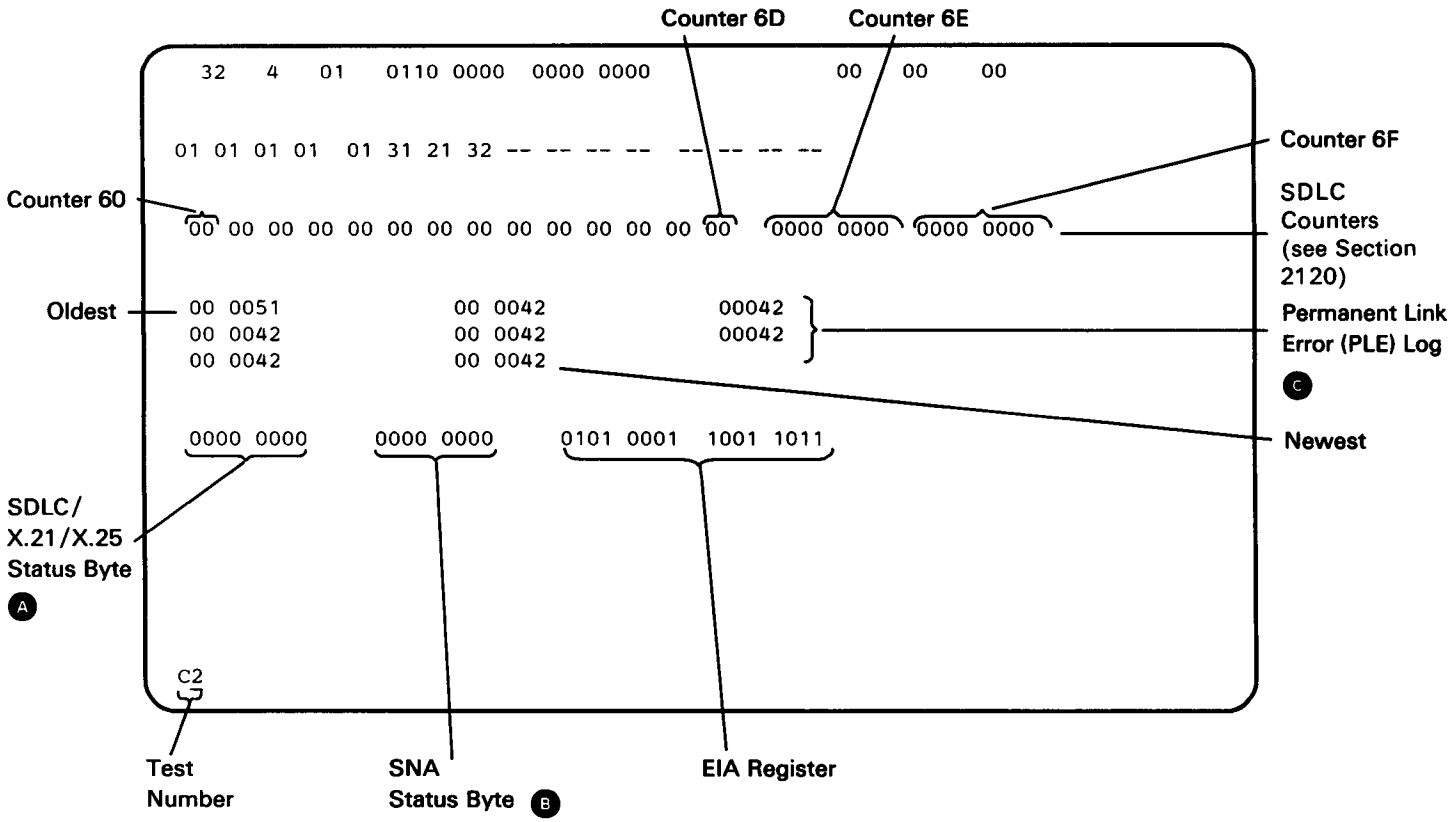

Note: An X = either a 0 or 1. This bit is normally changing so it may not be the same from one screen update to another. The current status is reflected at the time an enter key is pressed.

0 = Signal Active
1 = Signal Inactive

EIA Register

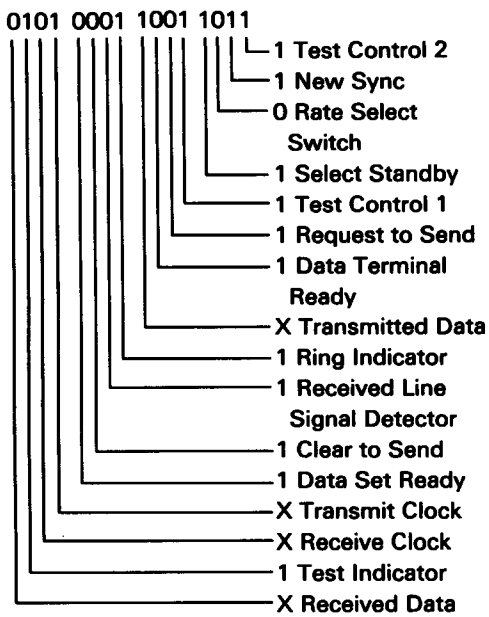

Ⓐ SDLC/X.25/X.21 Status Bytes

Status Byte for SDLC

Note: This byte is reset when a correct address is received while in disconnect mode.

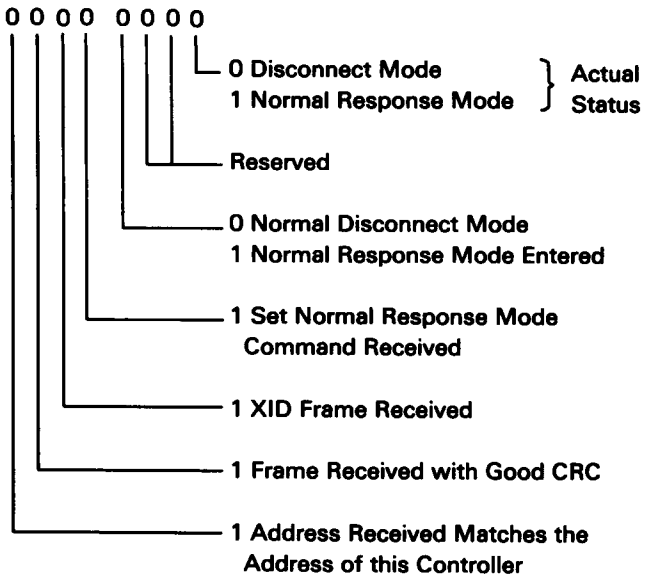

Status Byte for X.25

Note: This byte is reset when an operator initiates action to place or receive a call.

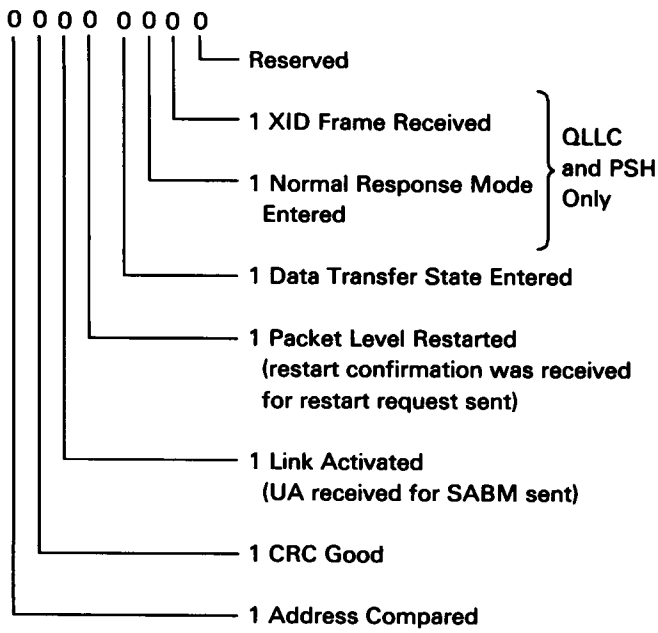

Status Byte for X.21 Switched

Note: Bits 1 through 6 are reset when a call is initiated (whether incoming or outgoing).

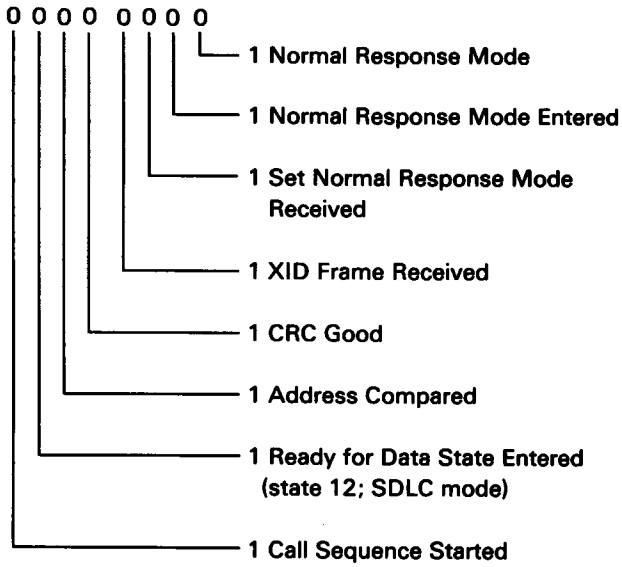

Ⓑ SNA Status Byte

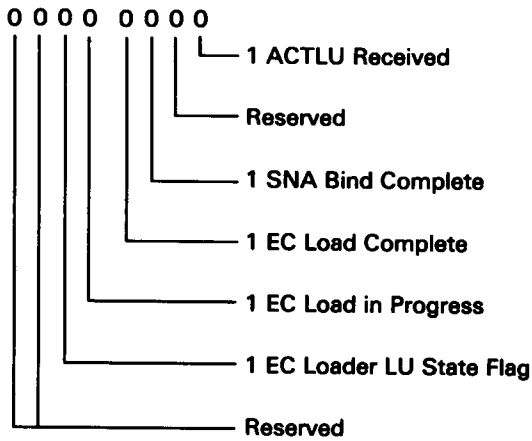

Ⓒ Error Code

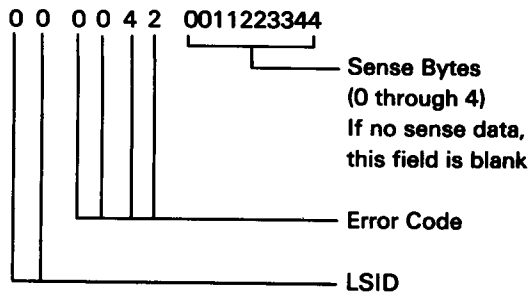

C3 Screen

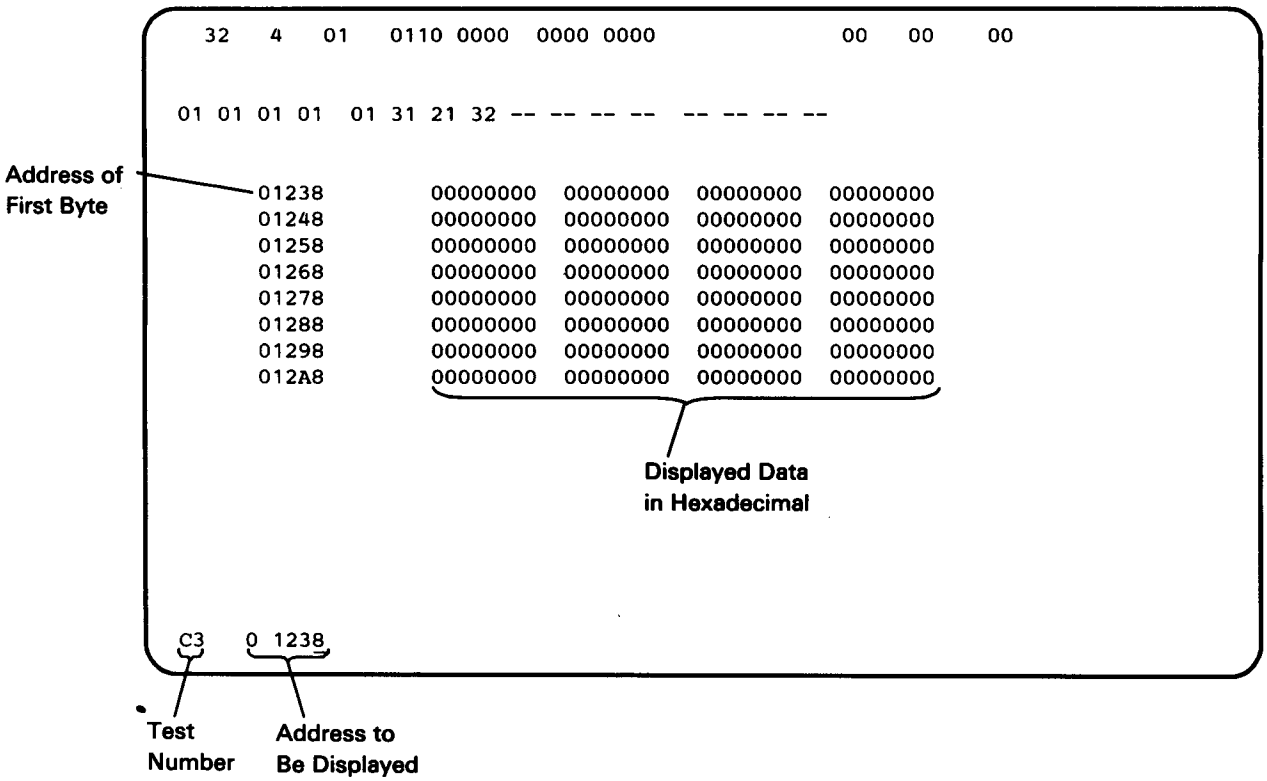
32 4 01 0110 0000 0000 0000 00 00 00
01 01 01 01 01 31 21 32 -- -- -- -- -- -- -- --
Address of First Byte
01238 00000000 00000000 00000000 00000000
01248 00000000 00000000 00000000 00000000
01258 00000000 00000000 00000000 00000000
01268 00000000 00000000 00000000 00000000
01278 00000000 00000000 00000000 00000000
01288 00000000 00000000 00000000 00000000
01298 00000000 00000000 00000000 00000000
012A8 00000000 00000000 00000000 00000000
Displayed Data in Hexadecimal
C3 0 1238
Test Number
Address to Be Displayed

2014 Online Tests

(1 of 7)

Online tests include work station test routines that are supplied by the host system. When the Prime Option Menu is displayed, it permits the selection of the following: display verification, printer verification, configuration data, ERAP (error recording analysis procedure) data, and a link test.

Online tests can be run on the work station while other jobs are being run on the system. However, the work station executing the online tests must be signed off before online tests can be run on that work station. There may be various methods that can be used to terminate or sign off a job. These methods are not described in this manual because they are system operating procedures.

Test Procedure

To start the online tests, the display station must be communicating with the work station controller (the System Available indicator is on). The following procedure is good for most systems.

1. If the System Available indicator is on, go to step 3.

2. If the System Available indicator is not on, ensure that the work station controller is powered on, the test switch is in the Normal position, and the Power, Ready, and Workstation Active LEDs are all on.

3. If a sign-on screen is displayed, go to step 4.

    a. If this station is on a switched line, determine what the connection is to the host system, if not already done.
    b. If this station is on a nonswitched line, call the system operator and have the work station controller varied on.
    c. If you cannot get a sign-on screen, go to MAP 0100.

4. Perform one of the following steps:

    a. If your display station is a 5251, 5291, or a 5292, press the Cmd key and then the test req key
    b. If your display station is a 3179, a 3180, or a 3196, press and hold the Alt key while pressing the Test key.
    c. If your keyboard is different from those in steps a and b, refer to section 2003.

The online test Prime Option Menu should now be displayed. If it is not displayed, check the following list of possible reasons:

- The display station is not signed off. Check with the operator before signing off the display station.

- The display station is varied off. Call the system operator.

- An error message is waiting on the System Console about this display station. Call the system operator.

Use the displayed menus to select the test desired.

To exit this procedure, follow the exit procedure supplied on the display screens.

Online Tests (2 of 7)

The following screen is an example only. Follow the instructions on your display screen to perform these tests. See the *Online Test Aids* on the following page.

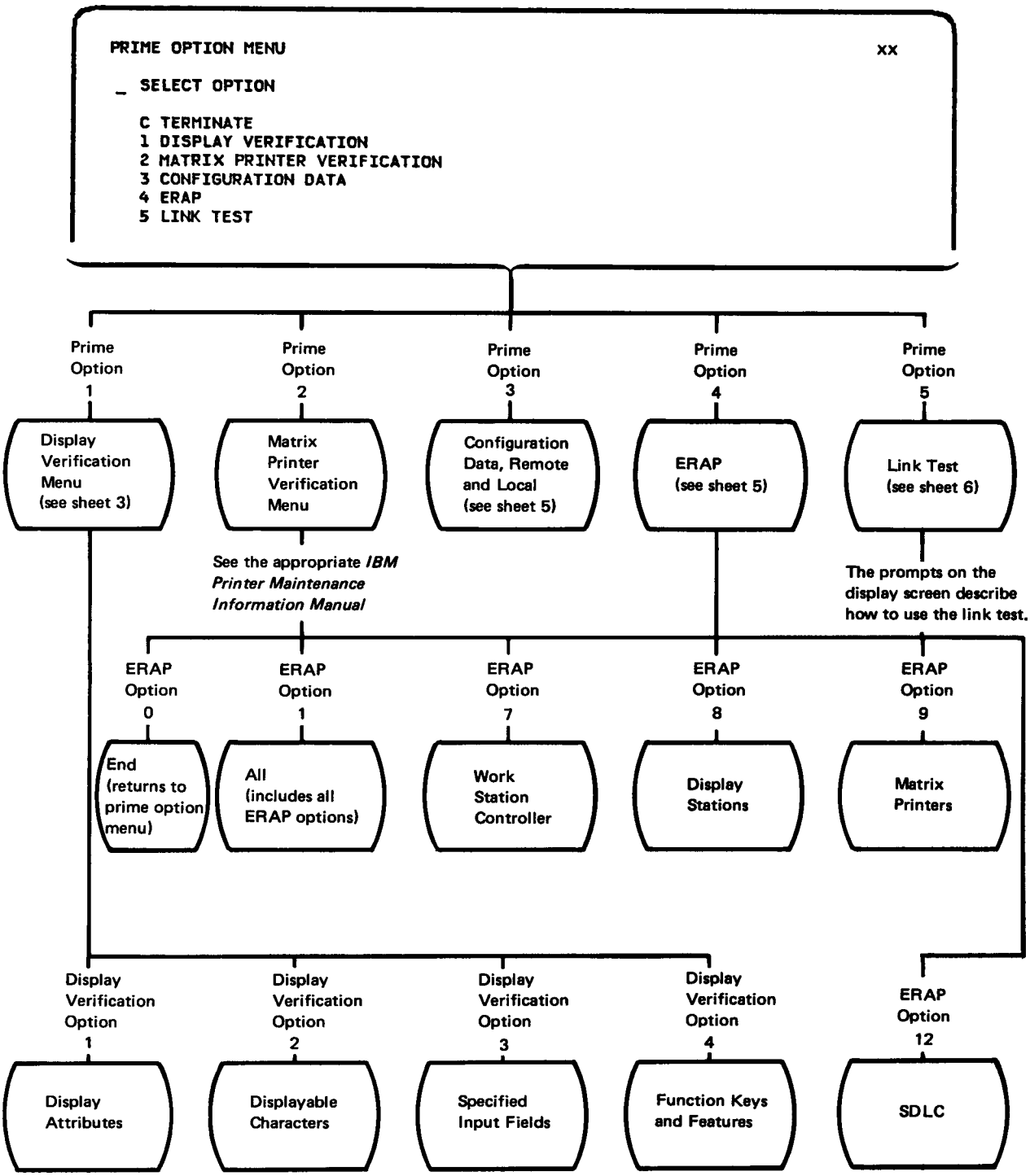

Online Tests (3 of 7)

Online Test Aids

The following descriptions will aid you in using the online test screens. Most of the screens are self-explained. Read the screen carefully. When you select an option from the screen menu, you must also press the Enter key to activate it. How-to-use information is supplied here for the following screens:

Display Verification

The Display Verification Menu permits the selection of the following tests: the display attributes test, the displayable characters test, the specified input fields test, the function keys test. The display attributes test and the displayable characters test check the display station planar. The specified input fields test checks the work station controller. The function keys check the interface with the host system.

Display Attributes

This display tests the display screen attributes.

To use this display to check the attribute operation:

1. Press the Spacebar once to position the cursor to the right of SPECIFY ATTRIBUTES statement on the display screen.

2. Key in one of the hexadecimal numbers shown on the screen and press the Enter key.

3. Observe the results that take place on the right side of the display screen.

To cancel this screen, follow the exit procedure on the display screen.

Online Tests (4 of 7)

Displayable Characters

This display shows the characters that are generated when the comparable keyboard keys are pressed. A sample displayable character screen is shown below. The screen on your display station may not look the same.

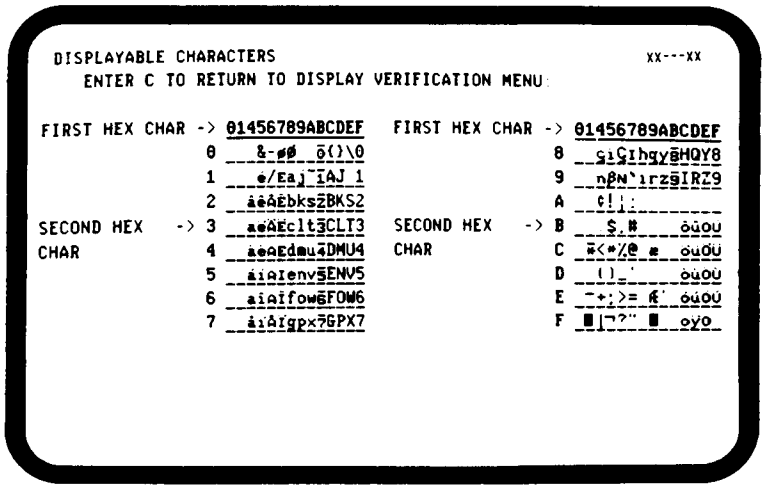

XX---XX (station ID) can be up to 10 characters.

See the IBM 5250 Information Display System Functions Reference Manual, Figure 2-2, to determine the hexadecimal codes for the characters that will change because of the language selected.

Online Tests (5 of 7)

Specified Input Fields

This display tests the work station controller operations that are used by the display station. Fields of information are entered, read by the controller, and written back to the display screen next to the input field.

To use this display:

1. Press the Spacebar once to position the cursor at the start of the first input field. The cursor moves from the field on the left to the field on the right when the input field information is entered.

2. Enter information in the fields described on the display screen. If an error is made, press the Error Reset key and correct the error.

The field descriptions are:

Alpha or Numeric: Key in 5 alphabetic or numeric characters.

Alpha Only: Key in 5 alphabetic characters.

Field Exit Req: Key in 5 alphabetic or numeric characters and then press the Field Exit key.

Numeric Only: Key in 5 numeric characters.

Dup Key: Press the Dup key once. The key code of the Dup key is shown until the screen is written by the controller. This field duplicates the Numeric Only field.

Signed Numeric: Key in 4 numeric characters. The cursor remains under the last character keyed. Press the Field Exit key (positive) or the Field- key (negative).

Bypass: The field is automatically bypassed and no entry is needed.

Upper Case: Key in 5 alphabetic characters

Rt Adj Z Fill: Key in 1 alphabetic or numeric character. Press the Field Exit key. The character keyed is moved to the right (Rt) of the field and the left four positions will be filled with zeros.

Self Check for Modulus 10: Key in A F 1 2 7 6 5 6.

Rt Adj B Fill: Key in 1 alphabetic or numeric character. Press the Field Exit key. The character keyed will be moved to the right (Rt) of the field and the left four positions are filled with blanks.

Self Check for Modulus 11: Key in A F 1 2 7 6 5 5.

Auto Enter: Key in 5 alphabetic or numeric characters.

As soon as the last character is keyed, the controller reads all the input fields, sends the information to the system, and writes the information back to the display screen next to the input fields.

Online Tests (6 of 7)

Function Keys and Features

This display tests the roll keys and command function keys.

To use this display:

1. Press and hold the Upper Shift key while you press either the Roll Up or Roll Down key. (On some keyboards, press Page Down instead of Roll Up; instead of Roll Down, press Page Up. You don't need to use any Shift key.)

2. Observe roll lines 1, 2, 3, and 4. You can return lines that have rolled off the display screen by pressing the Enter key.

3. Observe the intensity of the numbers on the display screen while you perform step 4.

4. Press the Cmd key; then press command function key 1. Repeat until command function keys 1 through 12 have been pressed. Press the Cmd key again; then press and hold the Upper Shift key while pressing command function key 13. Release both keys. Repeat until command function keys 13 through 24 have been pressed.

5. Repeat step 4 to obtain a normal display of the numbers.

Configuration Data

Remote Stations: The following are descriptions of the configuration data for remote stations:

- Line is the communication line number that this display station is on.

- Station Addr is the address for the work station controller. The station address permits the system to address a specific remote controller.

- LSID (logical station identification) permits the system to communicate to the work station controller which specific work station the system wants to communicate with. The work station address is the last 6 bits of the LSID.

- Logical ID is the name the system uses to address a specific work station.

- Description is the type of device being addressed.

Local Stations: The following are descriptions of the configuration data for local stations:

- Device Addr is the address of the work station controller.

- Unit Addr is the address of the work station(s) assigned to the work station controller. The first digit is the physical port/cable number, and the second digit is the station address.

- Logical ID is the name the system uses to address the station(s) assigned to the work station controller.

- Description is the type of device being addressed.

Error Recording Analysis Procedure (ERAP)

Note: The format specifies entering a 2-digit option code. For example, to select ALL, enter 01.

Online Tests (7 of 7)

The following are descriptions of the ERAP options:

- If you select the END option, the ERAP function is terminated. If you select the END option and press the Field Exit key, the display returns to the sign-on menu.

- If you select the ALL option, the ERAP tables are displayed one at a time for all devices on the line. When the error history table for the first device is displayed and the Enter key is pressed, the I/O counter table for the second device is displayed. This sequence is repeated until the error history table for the last device on the line is displayed.

- If you select the Work Station Controller option, the Display Stations option, or the Matrix Printers option, you must also select a specific device. The I/O counter table, the error counter table, and the error history table are displayed for the selected device only.

Note: For a description of the error history table, see 2190.

Link Tests

To determine if a link test can be selected from a remote work station or only from a host system, do the following:

1. Press the 5 key.

2. Press the Enter key.

Note: The prompts on the display screen describe how to use the link test or where to get the information needed to use it.

2050 Error Logs

Three error logs are kept to record errors that occur on the work station controller and all attached work stations. They are the Error Log Buffer, the Permanent Link Error (PLE) Log, and the Hard Error (HE) Log. The contents of the error log buffer is transmitted to the host system and stored there when the error log buffer is full and also at the end of each session.

The error log that is stored in the host system can be displayed or printed at the work station by using the online test (2014) and selecting the ERAP option from the Prime Option Menu. The ERAP option shows the error log as an error history table.

The contents of the error log buffer and the PLE log can be displayed on any attached display station by using concurrent mode test C2 (2013).

The contents of the hard error (HE) log can be displayed on any attached display station by using concurrent mode test C1 (2013).

Error Log Information

Error log entries in the error log buffer and the PLE log have the following format:

LSID,XXXX,S0,S1,S2,S3,S4

where: LSID Logical Session ID

XXXX Error Code (2100)

- Indicates the Error Condition
- Indicates Device Type:
  - 00 Work Station Controller Errors
  - 01 Attached Display Station Errors
  - 02 Attached Printer Errors

S0 through S5 Sense Bytes

Error codes 0040 through 0045, 0047, 0048, and 0050 through 0053 have no sense bytes.

Error codes 0046 through 0054 have four sense bytes.

Error codes 0070 through 0098 have five sense bytes.

Error codes 01xx and 02xx all have five sense bytes.

X.25 error codes are 6-bit codes and are displayed in fields XXXX and S0.

Error Log Buffer

The error log buffer is a 128-byte buffer in RAM where error codes from attached work stations and some selected work station controller error codes are stored for transmission to the host system.

PLE Log

The permanent link error (PLE) log is a 37-byte buffer in battery-powered RAM where all communication hard errors are stored. These errors are also stored in the error log buffer but are lost when the work station controller is powered off.

Hard Error (HE) Log

Nonrecoverable errors caused by an internal failure of the work station controller and detected either during power-on diagnostics or during operation will be entered into this log when possible. The HE log is a 15-byte buffer in battery-powered RAM and all entries are 6 characters (3 bytes) long. This log contains only the five latest errors.

Host Error Logging

The work station controller error log entries are sent to the host system when the error log is full or when requested by the host system. The host always requests the error log entries at the termination of a session.

SDLC Error Counters (60 through 6D)

SDLC errors that can be corrected and recovered will be counted and the cumulative total stored in the work station controller. When any counter reaches 255, or when the host system requests maintenance statistics, each counter that has a value more than zero has its contents converted to an error code. The code is sent to the host system as a work station controller error log entry. These error codes are not logged internally in the work station controller. The counter information can be used to determine signal line quality and recovery action in the work station controller. The counters are reset when the contents are formatted into an error code.

Note: See Section 2120 for detailed descriptions of these counters.

Statistical Counters (6E and 6F)

The work station controller has two statistical counters that contain 4 bytes each. These counters are used to count the number of valid I-frames received and transmitted. The contents of these counters are formatted into error codes and sent to the host system when the SDLC error counters are sent. The counters are reset when the contents are formatted into an error code.

Note: See Section 2120 for detailed descriptions of these counters.

For your convenience, a form for comments is in the back of this publication.

2100 System Reference Codes

The following pages contain all the valid system reference codes for the IBM 5294 Control Unit (work station controller) and attached work stations.

The error codes are listed alphamerically and are grouped by:

- Operator Error/Message Codes and Work Station Controller Error Codes (2110)
- Work Station Logged Error Codes (2120)
- Display Station Logged Hardware Error Codes (2130)
- Printer Error Codes (2140)
- X.25 Operator Error/Message Codes (2150)
- X.25 Communication Error Codes (2160)
- X.21 Operator Error/Message Codes (2165)
- Communication Diagnostic Error Codes (2170)
- X.21 Communication Codes (2166)
- Power-On Diagnostics Error Codes (2180)

Also included are descriptions of the Error History Table for the work station controller and display station (2190). Error codes for specific work stations are defined in the work station maintenance documentation. The following page contains an Error Code Summary Table which identifies what error codes are displayed and/or logged.

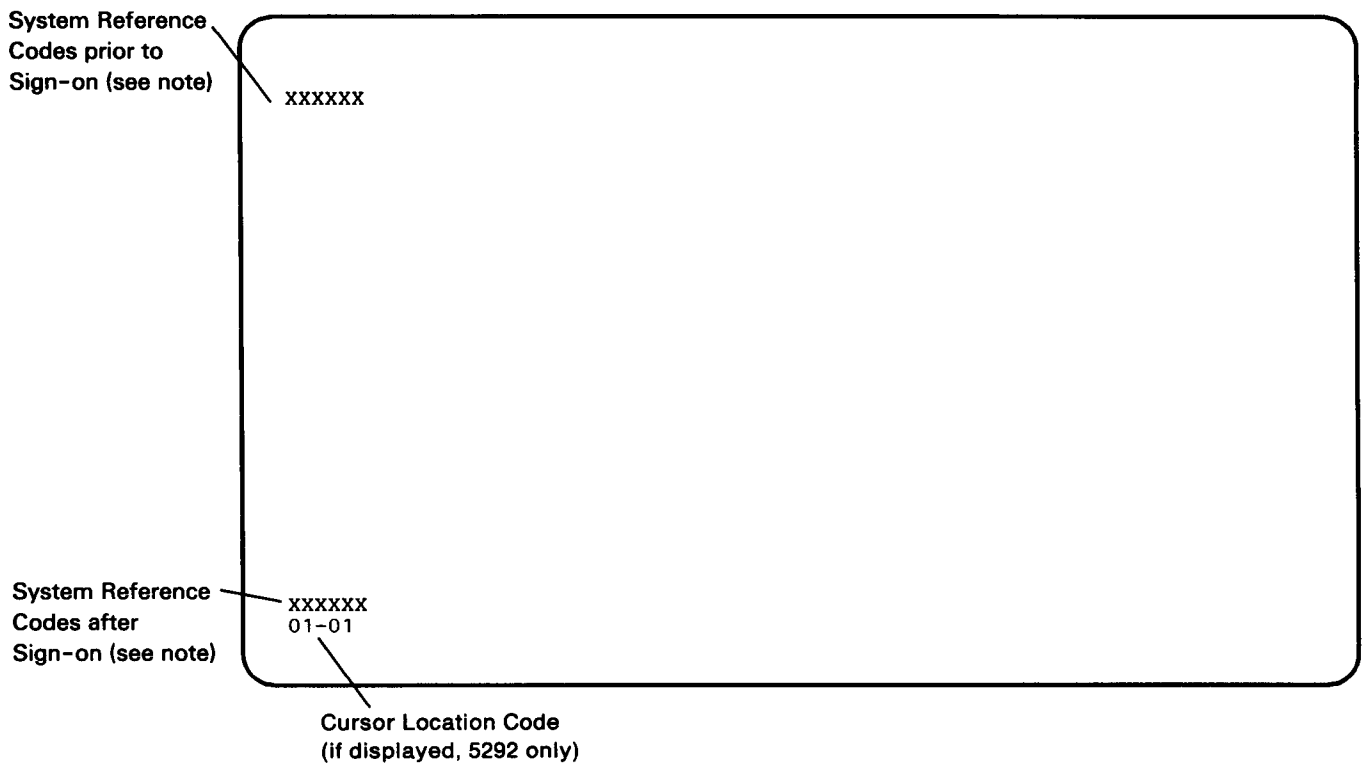

Note: System reference codes may be either 4 or 6 characters.

Error Code Summary Table

A detailed description of the error codes follows this table.

Note: If you have a 5294 Model K01 or S01, or if the Text Entry Assist feature is installed, see also the *Special Error Codes* table following the table below.

Code	Usage	Displayed (See Note 2)	Logged Host Sys	Logged Log Buf	Logged PLE Log	Logged HE Log
0000 through 003F	Operator errors	Yes	No	No	No	No
0040 through 005F	Error code for communication interface errors (link level)	Yes	Yes	Yes	Yes	No
0060 through 006F (See chart below.)	Formatting of SDLC counters for transmission to the host system	No	Yes	No	No	No
0070 through 007F (See chart below.)	Reserved					
0080 through 0087	Customer setup/configuration operator error messages	Yes	No	No	No	No
0090 through 009F	Operator error messages	Yes	No	No	No	No
01XX	Attached display error codes	No	Yes	Yes	No	No
02XX	Attached printer error codes	No	Yes	Yes	No	No
03XX through 0FXX	Not used					
10XXXX	X.25 operator errors	Yes	No	No	No	No
11XXXX through 1FXXXX	X.25 communication errors (packet level)	Yes	Yes	Yes	Yes	No
20XXXX	X.21 operator error	Yes	No	No	No	No
210000 through 212100	X.21 communication errors	Yes	No	No	No	No
212200 through 217XXXX	X.21 communication errors	Yes	Yes	Yes	Yes	No
218XXXX through 219XXXX	X.21 communication errors	Yes	No	No	No	No
22XXXX through 24XXXX	X.21 communication errors	Yes	Yes	Yes	Yes	No
25XXXX through 5FXXXX	Reserved					
60XXXX through 6FXXXX	CE/CSR selected diagnostic error codes	Yes	No	No	No	No
70XXXX through CFXXXX	Reserved					
D0XXXX through DAXXXX	Power-on diagnostics	Yes	No	No	No	Yes
E0XXXX through EFXXXX	Hardware errors during operation (functional microcode in control)	Yes	No	No	No	Yes
F0XXXX through FFXXXX	Coding errors detected during operation	Yes	No	No	No	Yes

Notes:
1. Error code 201100 is logged in the host system and error log buffer.
2. The nature of the failure may prevent the display of error codes D0XXXX through FFXXXX.

Special Error Codes

The following chart contains additional error codes used only with the Model K01/S01 and/or the Text Entry Assist feature.

Code	Usage	Displayed (See Note)	Logged Host Sys	Logged Log Buf	Logged PLE Log	Logged HE Log
0060 through 0071	Operator errors (Model K01 and S01)	Yes	No	No	No	No
0070 through 0078 0079 through 007F	Operator errors (Text Entry Assist only) Reserved	Yes	No	No	No	No
Note: Operator error codes 0067, 0068, and 0069 are generated by the host system. Codes 0070 through 0078 will be displayed only when the Help key is used. Usually a test message will be displayed for these errors.						

2110 Operator Error Codes

These error codes, except for error codes 0040 through 0054, are for the attached display stations. Error codes 0040 through 0084 are only for the work station controller, but the codes can be displayed on any attached display station.

Note: When the 5294 Control Unit is a Model K01/K02 or when the Text Entry Assist feature is installed, see 2111 and 2112, respectively, for additional special error code descriptions.

These errors are caused by pressing a wrong key, pressing a key that is not valid at a specific time, entering the wrong data in a specified input field, and communication or hardware problems. Error codes appear on the display screen with the format 00XX.

Note: When an operator error code is displayed, a description of the error condition is also displayed for some errors if the Help key is pressed.

You can check the program error conditions with the display station online tests. For example, fields specified by the host system can be verified when option 3 is selected from the Display Verification Menu. You can intentionally make an error by entering the wrong data in a field and then check the error condition that appears. See the display station maintenance library for a description of the Online Tests.

The following list of operator error codes shows the error code number and the error message, followed by a description of the cause of the error.

For error recovery on all these errors, press the Error Reset key.

0000 HELP KEY NOT PERMITTED NOW

You pressed the Help key; however, either no error code was displayed or the error was sent by a program that does not support the Help key.

0001 KEYBOARD OVERRUN

The controller has not kept up with the rate you were entering information and the last character you entered was not recognized. This is a keyboard overrun.

0002 SCAN CODE NOT VALID

The controller received a key code that is not valid.

0003 THE KEY THAT FOLLOWED THE CMD KEY NOT VALID

You have pressed the Cmd/Alt key, but the next key you pressed was not one of the command or Alt function keys.

0004 KEY ENTRY INTO MSR FIELD NOT PERMITTED

You attempted to enter data from the keyboard into a field where data can be entered only from a magnetic stripe reader.

Move the cursor to a field where data can be entered from the keyboard.

0005 CURSOR IN PROTECTED AREA OF DISPLAY

You have attempted to enter data; however, the cursor is not in an input field on the display. Data cannot be entered in a protected area of the display.

0006 THE KEY THAT FOLLOWED THE SYS REQ KEY NOT VALID

You pressed the Sys Req key but did not follow by pressing either the Enter key or the Error Reset key.

0007 MANDATORY ENTER FIELD – MUST ENTER DATA

There is at least one mandatory enter field on the display that you must enter data into before the display can be changed or moved.

0008 THIS FIELD MUST HAVE ALPHABETIC CHARACTERS

The field you are now attempting to enter data into will take only alphabetic data, and you have pressed some other key.

Valid characters are A through Z, blank, comma, period, hyphen, and apostrophe. The Dup key can be used to duplicate these characters in this field.

0009 THIS FIELD MUST HAVE NUMERIC CHARACTERS

The field you are now attempting to enter data into will take only numeric data, and you have pressed some other key.

Valid characters are 0 through 9, blank, comma, period, plus, and minus. The Dup key can be used to duplicate these characters into this field.

0010 ONLY CHARACTERS 0 THROUGH 9 PERMITTED

The field you are now attempting to enter data into will take only signed numeric data, and you have pressed some other key.

Valid entries are 0 through 9 and the Dup key.

0011 KEY FOR SIGN POSITION OF FIELD NOT VALID

You have attempted to enter data into the last position of a signed numeric field.

0012 INSERT MODE – NO ROOM TO INSERT DATA

There is no room to insert data into this field. Either there is no more room in the field or the cursor is in the last position of the field.

Do not use the insert mode to change data or to enter the last character into this field.

0013 INSERT MODE – ONLY DATA KEYS PERMITTED

You are now in insert mode; however, you have pressed a key that is not a data key. Only data keys are valid after pressing the Ins key.

To use insert mode, press the Ins key and then a data key.

To exit the insert mode, press the Error Reset key.

0014 MANDATORY FILL FIELD – MUST FILL TO EXIT

You have pressed a function key that would move the cursor out of this field; however, the cursor is not in the first or last position of this mandatory fill field. A mandatory fill field must be completely filled unless you leave the field from the first position in the field and no data is entered into the field.

Enter data to the end of the field or move the cursor to the start of the field and then use the Field-, Field+, or Field Exit key to blank all of the field.

0015 CHECK DIGIT ERROR

The number and the check digit you have just entered do not compare.

0016 FIELD MINUS KEY NOT VALID WITH THIS FIELD

You have pressed the Field- key, but the field you are in is not a signed numeric field. You can either continue to enter data or press the Field Exit key to leave the field.

0017 MANDATORY FILL FIELD – KEY USED NOT VALID

You have pressed the Field-, Field+, or Field Exit key, however, the cursor is not in the first or last position of the mandatory fill field. A mandatory fill field must be completely filled unless you leave the field from the first position in the field and no data is entered into the field.

Enter data to the end of the field or move the cursor to the start of the field and then use the Field-, Field+, or Field Exit key to blank all of the field.

0018 KEY USED TO EXIT THIS FIELD NOT VALID

The cursor is in the last position of this field. You must use a key that is not a data key (for example, the Field Exit key) to leave this field.

0019 DUP KEY NOT PERMITTED IN THIS FIELD

You have pressed the Dup key; however, the Dup key is not permitted in this field.

0020 FUNCTION CONTROL KEY NOT VALID IN THIS FIELD

You have pressed a function control key; however, that key is not permitted in this field. This is either a right adjust field or a signed numeric field, and you must leave the field before pressing the following function control keys:

- Command function keys
- Test Request key

- Clear key
- Enter/Rec Adv key
- Print key
- Help key
- Roll key
- Home key (when the cursor is in the home position)

Continue by pressing the Field+, Field-, or Field Exit key.

0021 MANDATORY ENTER FIELD – MUST ENTER DATA

The cursor is in a mandatory enter field. A mandatory enter field must have data entered in the field before you can leave the field.

0022 STATUS OF FIELD NOT KNOWN

A system error has occurred. The status of the present field is not known. This error can occur during the insert or delete operation.

0023 HEX MODE – HEXADECIMAL KEY ENTERED NOT VALID

You are in hexadecimal mode but the first key pressed was not a character A through F or number 4 through 9; or the second key pressed was not a character A through F or number 0 through 9.

This error also occurs when a hexadecimal code is used in a numeric only, signed numeric, alpha only, or I/O field.

0024 ONLY CHARACTERS 0 THROUGH 9 PERMITTED

The field you are now attempting to enter data into will take only digits, and you have pressed some other key.

Valid entries are 0 through 9 and the Dup key.

0026 CHARACTER ENTERED NOT VALID FOR THIS FIELD

You have pressed the Field- key in a numeric only field, but the last character you entered is not a 0 through 9.

Move the cursor to the wrong character and enter the correct character.

0027 KEY NOT DEFINED – KEY CANNOT BE USED

You pressed a key that is not used by this system.

0029 MULTINATIONAL CHARACTER SET NOT VALID

The second key pressed during a diacritic key function did not result in a valid combination. This error may happen on some displays even when not using the multinational character set.

0031 WORK STATION CONTROLLER BUFFER OVERFLOW

The data on the MSR card was not inside the specified length for the MSR. Continue without using that MSR card.

0032 DATA ERROR ON A CLUSTER ATTACHED WORK STATION

A 16-byte block of data was not transferred. Attempt to use the MSR card again. If the error occurs again, continue without using the MSR card.

0033 SECURITY DATA NOT AUTHORIZED

The MSR data received was security data, and this field was not specified for security data in the field control word. Ensure that you are in the correct field. Attempt to use the MSR card again. If the error occurs again, continue without using that MSR card.

0034 MSR WILL NOT FIT IN ACTIVE INPUT FIELD

The data received by the controller from the MSR will not fit in the field. Attempt to use the MSR card again. If the error occurs again, continue without using that MSR card.

0035 MSR ERROR

The MSR status byte indicates a reader error. Attempt to use the MSR card again. If the error occurs again, continue without using that MSR card.

0036 LIGHT PEN USE IS NOT PERMITTED.

You have started entering data into a field (can be any field on the display) but have not left the field (completed entering data) before attempting to use the light pen.

0037 TIP SWITCH ERROR

You have operated the light pen tip switch when the light pen was not in a light pen field; meaning, the light pen is pointed at a character in a field that does not have a light pen control word.

Note: 0040 through 0054 and host system log codes 0060 through 6F are described in section 2120.

2111 Operator Error Codes for Model K01/S01 Only

0060 ALPHANUMERIC DATA NOT ALLOWED

You have tried to enter alphanumeric data into a field that allows only 2-byte data characters.

To recover, press Error Reset and continue, entering 2-byte data in this field or subfield.

0061 IDEOGRAPHIC DATA NOT TRANSLATED

You have tried to enter ideographic (2-byte) data into a field that allows only alphanumeric (1-byte) data characters, but the 2-byte character does not have a 1-byte equivalent.

To recover, press the Error Reset key and continue entering 1-byte data in this field or subfield.

0062 DATA TYPE CHANGE NOT VALID

You have tried to change the data type, but the cursor is not in an *open* field or the first enterable position of an *either* field.

To recover, press the Error Reset key. Position the cursor in the first *enterable* position of the field.

0063 IDEOGRAPHIC NUMBER NOT VALID

You have tried to enter an ideographic character that is not valid while operating in alternate entry mode.

To recover, verify that the code you wish to enter is valid. Press the Error Reset key, and enter the code for a valid 2-byte character.

0064 KEY NOT DEFINED FOR CURRENT MODE OR SHIFT

The key you just pressed is not valid in the current mode or in shift mode.

To recover, press the Error Reset key. Press only keys that are valid in your current mode or in shift mode.

0065 RESERVED FOR SHIFT CHARACTER

The column into which you are trying to enter data is reserved for a shift-out or shift-in character.

To recover, press the Error Reset key. To verify the start and end of the 2-byte field or subfield, press the DISPLY OE/OF CHAR key. This allows you to see where shift-out and shift-in characters are located.

0066 REPEAT OPERATION NOT VALID

You tried to use the REP key to repeat a shift or attribute character. Only data characters can be repeated with the REP key.

To recover, press the Error Reset key. Continue without using the REP key.

0067 EXTENSION CHARACTER RAM FULL

The display station extension character RAM is full. Additional extension characters will be displayed as a special default character.

To recover, press the Error Reset key. You can now continue to enter data.

0068 OUTPUT DATA STREAM FOR EXTENSION CHARACTER SCREEN NOT VALID

Data in the data stream is not valid for the extension character. Additional extension characters will be displayed as a special default character.

To recover, press the Error Reset key. You can now continue to enter data.

Note: Error codes 0067 and 0068 are used by the host system only.

0069 EXTENSION CHARACTER SCREEN NOT VALID FOR OUTPUT DATA STREAM

Data in the data stream is not valid or is not defined for the extension character. Additional extension characters will be displayed as a special default character.

To recover, press the Error Reset key. You can now continue to enter data.

Note: Error code 0069 is used by the host system only.

0071 SHIFT REGISTER IN THE CONTROLLER IS FULL

No more shift characters are allowed on the screen.

To recover, press the Error Reset key. If a new ideographic field has to be added, an existing shift control character field (subfield) has to be deleted.

2112 Operator Error Codes for Text Entry Assist Feature Only

Note: These errors will usually result in a text message similar to the ones provided here. The error code will be displayed only when the Help key is used.

0070 AN ERROR OCCURRED DURING THE WORD WRAP FUNCTION OR THE REQUIRED CARRIER RETURN FUNCTION

To recover, press the Error Reset key. For more information, press the Help key.

0071 A START COPY, MOVE, OR DELETE TEXT OPERATION WAS ATTEMPTED WHILE ANOTHER OPERATION WAS IN PROGRESS

To recover, press the Error Reset key. Try the operation again when the operation in progress is complete.

0072 THE KEY PRESSED IS NOT VALID WHEN THE CURSOR IS IN THE CURRENT POSITION

To recover, press the Error Reset key. Move the cursor to the correct position and try again.

0073 AN ATTEMPT WAS MADE TO DELETE OR REPLACE INSTRUCTION OR FORMAT CHANGE CHARACTERS WHILE THE GENERAL PROMPT FUNCTION WAS ACTIVE

To recover, press the Error Reset key. Press the General Prompt command key to delete or replace instruction or format change characters. For more information, press the Help key.

0074 A KEY THAT WAS NOT VALID WAS PRESSED WHEN USING THE GENERAL PROMPT FUNCTION

To recover, press the Error Reset key.

0075 THE LOCATE FUNCTION FAILED TO FIND THE KEYED CHARACTER

To recover, press the Error Reset key. Try the operation again when the operation in progress is complete.

0076 THE CONTINUOUS INSERT FUNCTION FAILED BECAUSE THE HOST SYSTEM DID NOT READ THE TEXT ON THE SCREEN

To recover, press the Error Reset key. Wait until the host system has processed the text on the screen and try again.

0077 A FUNCTION KEY WAS PRESSED THAT IS NOT VALID AT THIS TIME

To recover, press the Error Reset key.

0078 THE REQUIRED SCALE LINE IS NOT VALID FOR YOUR DISPLAY STATION

There is an error in the application program. No scale line is defined for this line.

2120 Work Station Controller Error Codes

The 004X and 005X error codes are displayed, entered in the permanent link errors (PLE) log, and entered in the log buffer for transmission to the host system. The 006X codes are used only for transmitting counter contents to the host system.

0040 DCE NOT READY

The 'data set ready' line went not active during a receive operation (EIA/CCITT or DDSA) or the 'indicate' line was off and received data was 0 for 16 contiguous bit-times.

0041 RECEIVED LINE IDLE (X.25 Only)

The 'received' line was idle for 15 contiguous bit-times.

0042 RECEIVE CLOCK FAILED

The 'receive clock' signal failed during a receive operation.

0043 DATA SET READY LINE ACTIVE (Switched Only)

The 'data set ready' line is active and it should not be active.

0044 30-SECOND TIME-OUT (Switched Only)

The 30-second time-out has ended with no valid data received. If the work station controller and the modem is set up for auto-answer operation, the 'data terminal ready' line becomes inactive and causes a line disconnect.

0045 DATA SET WILL NOT ACTIVATE (X.25 Only)

Either a disconnect mode or disconnect signal was received during link setup procedures.

0046 FRAME REJECT RECEIVED (X.25 Only)

The HDLC frame sent was not valid when received by the host system.

0047 DM/DISC RECEIVED (X.25 Only)

A disconnect mode (DM) or disconnect (DISC) signal was received when the work station controller was not ready.

0048 UNEXPECTED UA RECEIVED (X.25 Only)

An unexpected UA was received by the 5294.

0050 CLEAR TO SEND ERROR

Either the 'clear to send' line was inactive while the 'request to send' line was active, or the 'clear to send' line was active while the 'request to send' line was inactive.

0051 TRANSMIT CLOCK FAILED

The 'transmit clock' signal failed during a transmit operation.

0052 TRANSMIT HARDWARE ERROR

The transmit buffer failed to clear either before or during a transmit operation.

0053 T1 TIMER RETRY COUNT EXPIRED (X.25 Only)

No acknowledgment of a transmission was received before the T1 timer expired after the tenth attempt.

0054 COMMAND REJECT SENT

The command received is not valid.

0055 XLCA CARD ERROR (XLCA Only)

An error was detected by the XLCA communication card. This error can be caused by connecting and/or powering on the DCE after the 5294 has been powered on.

0060 TEST FRAMES COUNTER (SDLC Only)

Counts the test frames received from the host system with CRC errors during a link test.

0060 RECEIVE NOT READY COMMAND SENT COUNTER (X.25 Only)

Counts all the *receive not ready* commands sent to the host system

0061 TEST FRAMES RECEIVED COUNTER (SDLC Only)

Counts the test frames received from the host system without CRC errors during a link test.

0061 RECEIVE NOT READY COMMAND RECEIVED COUNTER (X.25 Only)

Counts all the *receive not ready* commands received from the host system.

0062 COMMUNICATION ADAPTER UNDERRUN COUNTER

Counts the underrun conditions found by the communication adapter. An underrun condition occurs during a transmit operation when the communication adapter fails to supply a character to the transmit buffer in time for the character to be sent on the line.

0063 COMMUNICATION ADAPTER OVERRUN COUNTER

Counts the overrun conditions found by the communication adapter. An overrun condition occurs during a receive operation when the communication adapter fails to clear the receive buffer in time for another character to be received on the line.

0064 RECEIVE LINE SIGNAL DETECT LOSS COUNTER

Counts the loss of the 'receive line signal detect' signal during a receive operation.

0065 CLEAR TO SEND LOSS COUNTER

Counts the loss of the 'clear to send' signal during a transmit operation.

0066 DATA SET READY LOSS COUNTER

Counts the loss of the 'data set ready' signal during a transmit or receive operation.

0067 FRAME SEQUENCE ERROR COUNTER (SDLC Only)

Counts the frames that were received that have a sequence error (the Nr-Ns count does not match).

0067 REJECT COMMAND COUNTER (X.25 Only)

Counts the number of *reject* commands sent by the work station controller.

0068 TRANSMIT RETRY (SDLC Only)

Counts the frame or groups of frames that must be transmitted again by the work station controller to the host system because the host system did not receive them correctly.

0068 REJECT RECEIVED (X.25 Only)

Counts the frame or groups of frames that must be transmitted again by the work station controller to the host system because the host system did not receive them correctly and sent a reject command.

0069 CRC ERROR COUNTER

Counts the frames that were received that have a CRC error.

006A FRAME ABORTS RECEIVED COUNTER

Counts the number of times an abnormal ending is received by the work station controller.

006B COMMUNICATION CARD ERROR COUNTER (XLCA Only)

Counts the detected failures of the XLCA communication card.

006C T1 TIMEOUT COUNTER (X.25 Only)

Counts the number of times the T1 counter expires.

006D IPDU RETRANSMISSION (X.25 with ELLC Only)

Counts the number of times an IPDU is retransmitted at the logical link level.

006E TRANSMITTED I-FRAMES COUNTER

Counts the number of information frames transmitted.

006F RECEIVED I-FRAMES COUNTER

Counts the number of valid information frames received.

0080 DEFAULTS USED

Defaults are being used for all customer configuration entries.

0081 TOO MANY ATTACHED WORK STATIONS

There are too many active work stations attached.

0082 COUNTRY ID NOT VALID

The country identifier code is not valid.

0083 KEYBOARD COUNTRY ID IS NOT VALID

A keyboard country identifier code was entered for a device which is not present or is not a display station.

0084 DCE FIELD CHECK FAILED

The check on the DCE field failed.

0086 EXPANDED FUNCTION FEATURE NOT INSTALLED

An attached work station requested MSR or SLP support but the work station controller does not have the supporting feature installed.

0087 INFORMATION NOT VALID

Wrong information was entered in field 5 of the configuration screen. Ensure that the data in field 5 matches the same data on the Communications Network Setup Form.

0099 KEY NOT VALID AT THIS TIME

The key you pressed is not valid at this time because of one of the following conditions:

- The display station is not communicating with the host system.
- The program did not recognize the key.
- You pressed a function key before pressing the Sys Req key.

2130 Display Station Logged Hardware Error Codes

Errors that are relative to hardware failures or the servicing of a display station are listed. The controller detects these errors by sensing the status sent from the display station by sensing either no response or a wrong response. Errors are stored in the order in which they are received; they are listed here in groups. Error code 01XX identifies a display station error. These errors are stored in the error log buffer for transmission to the host system. They are displayed only by displaying the error log buffer or by the host system ERAP display function of the online tests.

Line/Interface Errors

0100 NO RESPONSE

This error is reported if the display station does not respond to a poll when the display station and controller are in session. This error is not normally logged.

0101 TRANSMIT ACTIVITY CHECK

This error is detected by the controller when a poll or a command is executed by the controller.

0103 RECEIVE PARITY ERROR

The controller reports this error if the wrong parity was received in response to a poll or command.

0104 LINE PARITY CHECK

The display station reports this error if the wrong parity was received in a poll or command.

0105 DISPLAY STATION NOT ACCESSIBLE

The addressed display station is not online.

0106 RECEIVE LENGTH CHECK

The controller received the wrong number of bytes as a result of a poll or command.

0107 WRONG STATION RESPONDED

A wrong station address was returned in response to a poll or other command from the controller.

0108 POWER-ON TRANSITION

The power-on transition status bits are set when the display station is powered on. This error is reported only if the bits are set while the display station is in session.

0109 ACTIVATE COMMAND FAILURE

The controller checked the device status and found that the busy bit was not on after an activate command.

Keyboard Errors

0111 SCAN CODE NOT VALID

The 8-bit code sent in the keyboard response frame could not be translated to a character or a function by the controller.

Command/Function Errors

0120 COMMAND NOT VALID

This condition indicates that the poll or other command sent to the display station was not a valid command or that the device ID was not correct.

0121 REGISTER VALUE NOT VALID

This condition indicates that the address counter value was not inside the user accessible limits.

0122 STORAGE OR INPUT QUEUE OVERRUN

This condition occurs if more than 16 commands and associated data frames are sent to the display station by the controller, or if an attempt is made to store data in storage that is not accessible to the user.

0123 NULL OR ATTRIBUTE EXCEPTION

This condition indicates that no attribute was found or that the address counter pointed to an attribute.

0124 ACTIVATE NOT VALID

This condition indicates that the activate command that was sent to the display station was not valid.

0125 EXCEPTION STATUS NOT DEFINED

This condition indicates that an exception status that was not defined was returned by the display station in response to a poll.

0149 ERROR STATUS NOT DEFINED

This condition indicates that the controller found an error but the cause of the error could not be determined.

0181 MAGNETIC STRIPE READER ERROR

This error is indicated if no device word was received by the controller while bit 10 was on.

0182 DEVICE TYPE ERROR

This condition indicates that a device not supported responded to a poll.

0183 WRONG SIZE DISPLAY ASSEMBLY

The CRT image size does not match the CRT image size set in the ID word sent by the display station.

0184 INCORRECT KEYBOARD ID

The keyboard ID received by the controller was not valid.

0185 INCORRECT KEYBOARD SPECIFIED

The keyboard ID received by the controller does not match the ID in the keyboard table in use for that display station.

0189 OUTSTANDING STATUS NOT VALID

An outstanding status was sent in the poll response, and no outstanding status information was available.

Time-Out Errors

0190 EVEN/ODD CHANGE IN STATUS

This condition indicates that the status sent to the controller from the display station did not change before 225 milliseconds after the controller sent a positive acknowledgment and received a not busy response.

0191 BUSY

This condition indicates that the controller found that the busy bit had been on for a period of more than 400 milliseconds.

2140 Printer Error Codes

The following error codes are due to printer interface failures. Only those error codes that are common for all printers that can be attached to the work station controller are listed. For error codes not listed and for additional printer error information, see the printer maintenance library.

0200 NO RESPONSE

0201 TRANSMIT ACTIVITY CHECK

0203 RECEIVE PARITY ERROR

0204 LINE PARITY ERROR

0205 PRINTER NOT ONLINE

0206 RECEIVE LENGTH CHECK

0207 WRONG STATION RESPONDED

0208 POWER-ON TRANSITION

0209 ACTIVATE COMMAND FAILURE

0211 CONTROL ADAPTER FAILURE

0212 COMMUNICATION ADAPTER FAILURE (5219-D Only)

0220 COMMAND OR DEVICE ID NOT VALID

0221 EXCEPTION RESPONSE NOT VALID
(Error at Work Station Controller)

0222 STORAGE/QUEUE OVERRUN

0223 ACTIVATE LOST
(Error at Work Station Controller)

0224 ACTIVATE NOT VALID

0225 EXCEPTION RESPONSE NOT VALID

0226 GRAPHIC CHECK

0227 EITHER BUFFER AVAILABLE OR PRINT COMPLETE, NOT POSTED WITHIN 32 SECONDS

0228 SCS COMMAND NOT VALID

0229 SCS PARAMETER NOT VALID

0250 END OF FORMS

0251 PRINTER NOT READY

0252 RESET COMMAND SENT

0255 SHARED PRINTER BUSY

0290 EVEN/ODD STATUS CHANGE TIME-OUT

0291 DEVICE BUSY TIME-OUT

0292 CLEAR COMMAND TIME-OUT

2150 X.25 Operator Error Codes

If the IBM 5294 Control Unit has the X.25 communications feature and an error occurs during the keyboard entry of commands, options, or parameters, a 6-digit error code of the form 10XXXX (where XXXX represents 4 hexadecimal digits) is displayed.

100000 A call command is still going on.

100100 The host system has not varied on the work station controller and a second command has been attempted.

100200 An answer command was entered for a PVC (permanent virtual circuit).

100300 A call command was entered for a permanent virtual circuit.

100400 The logical channel ID requested is not valid because it is not 3 characters long.

100500 The logical channel ID requested is not valid because it is not a hexadecimal character 0 through 9 or A through F.

100600 The password entered is not valid because it is longer than 8 characters.

100700 The 'to' address (first network address) is not valid because it is more than 15 decimal digits.

100800 The 'from' address (second network address) is not valid because it is more than 15 decimal digits.

100900 The network address is not valid because it does not contain all numeric digits (0 through 9).

100A00 Keyboard entry of optional parameters has been attempted but the Manual Options position (field 5, position 4 of the configuration setup) is 0 (off). (Manual entry not permitted.)

100B00 A flow control negotiation facility code (42 or 43) was entered but the Flow Control Negotiation position (field 5, position 3 of the configuration setup) is 0 (off).

100C00 The packet window size entered is not valid because it is less than 2.

100D00 The packet window size entered is not valid because it is more than 7.

100F00 The packet size entry is not equal to 64, 128, 256, or 512.

101000 The closed user group selection was attempted and the entry was not 2 decimal digits.

101100 A control character entered was not valid.

101200 The host network address is missing for a call command.

101300 An A, O, C, or D was not entered as the first control character or was entered earlier.

101400 A network address was entered for a PVC (permanent virtual circuit) selection.

101500 A password was entered for a PVC open.

101600 The password entered is not valid because it is not alphameric.

101700 A logical channel identifier was entered for an answer.

101800 Closed user group was entered either for an answer command or an open command.

101900 The E option was entered with the answer option.

101A00 An F (facilities) control character or an R was entered for an answer command or a PVC.

101B00 The value entered with the E option was not 3 digits, not numeric, or not in the range of 100 to 999.

For your convenience, a form for comments is in the back of this publication.

2160 X.25 Communication Error Codes

If the keyboard entries are acceptable to the work station controller, but the network connection with the host system fails, a code that indicates the type of communications problem is displayed on all attached display stations.

1100ff The work station controller sent a clear request packet after detecting an error.

The cause code is contained in the diagnostic field (ff). The possible cause codes are defined on the following page.

1200ff The work station controller sent a reset request packet after detecting an error.

The cause code is contained in the diagnostic field (ff). The possible cause codes are defined on the following page.

Cause codes for 1100ff and/or 1200ff errors are defined below.

Cause Code	Meaning
00	Normal initialization
14	Packet type for state p1 not valid
15	Packet type for state p2 not valid
17	Packet type for state p4 not valid
1B	Packet type for state d1 not valid
50	General ELLC/QLLC error
51	C-field not defined
54	I-field not defined
56	ELLC level Frame Reject received
57	Header not valid
59	Time out (LT1 x LN2) condition
5A	LNr not valid
5B	Recovery rejected/terminated
60	General PSH error
61	PSH sequence error
A1	*M* bit packet sequence not valid
A6	Packet too short
A7	Packet too long
AB	Ps not valid
AC	Pr not valid
AD	D bit received not valid
D2	PIU too long
E6	Facility parameters not supported
E7	Facility not supported
E8	Calling DTE not expected
E9	D-bit request not valid
EA	RESET INDICATION on Virtual Call
EB	Protocol Identifier not valid
EC	Password mismatch
ED	Facility Length not valid

18ccdd The data circuit-terminating equipment (DCE) sent a clear indication packet after detecting an error.

Cause codes (cc) are sent by the network and so may vary from network to network.

The cause codes listed here are defined by CCITT Recommendation X.25. IBM does not guarantee that they will pertain to your network. You should ask a representative of your network to determine the cause codes that pertain to you.

Cause Code	Description
00	DTE (host) originated
01	Called number is busy
03	Facility request not valid
05	Network congestion
09	Out of order
0B	Access to the host not permitted
0D	Host network address not recognized
11	Procedure error at the host
13	Procedure error at the work station controller
15	Recognized Private Operating Agency (RPOA) out of order[8]
19	Reverse charge acceptance not subscribed[8]
21	Destination not compatible
29	Fast select acceptance not subscribed[8]

The diagnostic codes (dd) are defined on the page following the 1Accdd definition.

8 May be received only if corresponding optional user facility is used.

19ccdd The data circuit-terminating equipment (DCE) sent a reset indication packet after detecting an error.

Cause codes (cc) are sent by the network and so may vary from network to network.

The cause codes listed here are defined by CCITT Recommendation X.25. IBM does not guarantee that they will pertain to your network. You should consult a representative of your network to determine the cause codes that pertain to you.

Cause Code	Description
00	DTE (host) originated
01	Out of order
03	Procedure error at the host
05	Procedure error at the work station controller
07	Network congestion
09	Remote DTE operational[9]
0F	Network operational[9]
11	Destination not compatible

1Accdd A restart was issued by the DCE.

The cause code is contained in the cause field (cc). These codes are defined below.

Cause Code	Description
00	DTE (host) originated
01	Procedure error at the work station controller
03	Network has received more packets than it can control
07	Network is operational

The diagnostic codes (dd) are defined on the following page.

9 Used with PVC (permanent virtual circuits) only.

Diagnostic codes (dd) for 18ccdd, 19ccdd, and 1Accdd are defined below.

Note: If the cause code (cc) is 00 (DTE host originated) and the diagnostic code (dd) is *not* 00, refer to the host documentation for the definition.

Diagnostic codes are sent by the network and so may vary from network to network.

The following diagnostic codes are the ones defined by CCITT Recommendation X.25. IBM does not guarantee that they are correct for your network. You should consult a representative of your network to determine the diagnostic codes that are used by your network.

Diagnostic Code	Description
00	No additional information
01	Send sequence not valid, P (S)
02	Receive sequence not valid, P (R)
10	Packet type not valid, general
11	Packet type not valid for state r1
12	Packet type not valid for state r2
13	Packet type not valid for state r3
14	Packet type not valid for state p1
15	Packet type not valid for state p2
16	Packet type not valid for state p3
17	Packet type not valid for state p4
18	Packet type not valid for state p5
19	Packet type not valid for state p6
1A	Packet type not valid for state p7
1B	Packet type not valid for state d1
1C	Packet type not valid for state d2
1D	Packet type not valid for state d3
20	Packet not permitted, general
21	Packet not identifiable
22	Call on one way logical channel
23	Packet type not valid on a permanent virtual circuit
24	Packet on a logical channel that is not assigned
25	Reject not subscribed to
26	Packet too short
27	Packet too long
28	General format identifier not valid
29	Restart with nonzero in bits 1-4, 9-16
2A	Packet type not compatible with facility
2B	Interrupt confirmation not authorized
2C	Interrupt not authorized
30	Timer expired, general
31	Timer expired for incoming call
32	Timer expired for clear indication
33	Timer expired for reset indication
34	Timer expired for restart indication
40	Call setup problem, general
41	Facility code not permitted
42	Facility parameter not permitted
43	Called address not valid
44	Calling address not valid
50	Call clearing problem, general
51	Nonzero address length field
52	Nonzero facility length field
80-FF	Network specific diagnostic information

1Bxx00 The work station controller has terminated the link after detecting an error.

The cause code is contained in the cause field (xx). The cause codes that pertain to the 1Bxx00 error code follow.

Cause Code	Description
11	Restart Confirmation received but no restart request sent
31	Call Connected not received in 200 seconds
32	Clear Confirmation not received in 200 seconds
33	Reset Confirmation not received in 200 seconds
34	Restart Confirmation not received in 200 seconds
5B	Recovery terminated
A5	Diagnostic Packet received
A6	Packet Length less than 2
A8	GFI not valid (Restart Indication/Confirmation only)
E2	LCID not equal to 0 on Restart Indication/Confirmation

2165 Operator Error Codes for X.21 Switched Support Feature Only

If the 5294 Control Unit has the X.21 Switched Support feature and an error occurs during the keyboard entry of commands, options, or parameters, a 6-digit error code of the form 20XXXX (where XXXX represents 4 hexadecimal digits) is displayed. A description of these codes follows.

200000 A CALL COMMAND IS ALREADY IN PROGRESS (not in session)

Wait until the Call command is complete, or an error code other than 200000 is displayed.

200100 A CALL COMMAND HAS BEEN DISCONNECTED

This is not an error; reset the code and continue operation with the next call.

200200 THE OPERATOR ATTEMPTED A DETACH COMMAND WHILE THE CALL COMMAND WAS IN PROGRESS OR NO COMMAND WAS IN PROGRESS

Wait until the previous command completes; then try again. If no command was in progress, try to make a call.

201100 THE HOST NETWORK IS BUSY AT THE ADDRESS KEYED IN

Wait until the host system is not busy, or try a different address.

2166 X.21 Communication Errors (X.21 Switched Support Feature Only)

If the 5294 Control Unit accepts the keyboard-entered options, but the network operation with the host system fails, a code that indicates the type of communication problem is displayed on the attached work stations.

The 21XX00 error codes occur when a call is in progress with the host system. The cause of the error is contained in the field XX. The codes that are valid follow:

210000 RESERVED

210100 THE TERMINAL CALLED THE HOST SYSTEM

Wait 1 minute or until an error code other than 20XX00 is displayed. This status is temporary.

210200 THE CALL IS BEING REDIRECTED

Wait 1 minute or until an error code other than 20XX00 is displayed. This status is temporary.

210300 CONNECT WHEN FREE

Wait 1 minute or until an error code other than 20XX00 is displayed. This status is temporary.

212000 THERE IS NO CONNECTION

Ensure that the number called is correct and try the operation again after 1 minute. This is a DCE or a network error.

212100 THE NUMBER IS BUSY

Ensure that the number called is correct and try the call again. If the number is busy for longer than normal, call the host system to see if the system port for the number called is actually busy. If the host system port and the DCE for the number called are ready and not busy, there is a network problem.

212200 THERE IS A PROCEDURE ERROR IN THE SELECTION SIGNALS SENT TO THE NETWORK

Ensure that the operating procedures are correct and try the operation again. If the same failure occurs, the problem is caused by the DCE or the network.

212300 THERE IS A TRANSMISSION ERROR IN THE SELECTION SIGNALS SENT TO THE NETWORK

Ensure that the number called is correct and try the operation again after 1 minute. This is a DCE or network error.

214100 ACCESS IS BARRED TO THE NETWORK

Ensure that the number called is correct and that the operating procedures and configuration are compatible with the network subscription for the 5294 Control Unit and the host system locations. If the procedures and configuration are correct and compatible, the failure is a network problem.

214200 THE NUMBER YOU ARE CALLING HAS CHANGED

Ensure that the number called is correct and that the operating procedures and configuration are compatible with the network subscription for the 5294 Control Unit and the host system locations. If the procedures and configuration are correct and compatible, the failure is a network problem.

214300 THE NUMBER YOU ARE CALLING CANNOT BE REACHED

Ensure that the number called is correct and that the operating procedures and configuration are compatible with the network subscription for the 5294 Control Unit and the host system locations. If the procedures and configuration are correct and compatible, the failure is a network problem.

214400 THE NUMBER YOU CALLED IS OUT OF ORDER

Ensure that the number called is correct, that the called system and DCE are powered on and ready, and that the 5294 Control Unit has been varied on. If both the host system and its attached DCE are powered on and ready, and the 5294 Control Unit is varied on, then the failure is due to a network problem.

214500 CALLED DTE; CONTROLLED NOT READY

Same as 214400.

214600 CALLED DTE; UNCONTROLLED NOT READY

Same as 214400.

214700 CALLED DTE; POWER OFF

Same as 214400.

214800 THE FACILITY REQUEST CODE IS NOT VALID

Ensure that the facility request code is correct and that the operating procedures and configuration are compatible with the network subscription for the 5294 Control Unit and the host system locations. If all of the above are correct and compatible, the failure is a network problem.

214900 THERE IS A NETWORK PROBLEM IN THE LOCAL LOOP AT THE DCE YOU CALLED

The problem is caused by the network or by the DCE.

215100 THE NUMBER CALLED CANNOT BE OBTAINED

Ensure that the number called is correct. If the number called is correct, call the network's information service to find out why the number called is temporarily not obtainable.

215200 THE USER CLASS OF SERVICE IS NOT COMPATIBLE

Ensure that the number called is correct and that the operating procedures and configuration are compatible with the network subscription for the 5294 Control Unit and the host system locations. If the procedures and configuration are correct and compatible, the failure is a network problem.

216000 THERE IS NO CONNECTION

Ensure that the number called is correct and try the operation again after 1 minute. This is a host system DCE or network problem.

216100 THE NETWORK IS CONGESTED

Ensure that the number called is correct and try the operation again after 1 minute. This is a network problem.

217100 THERE IS LONG-TERM NETWORK CONGESTION

The failure is caused by a network problem.

217200 THE RECOGNIZED PRIVATE OPERATING AGENCY (RPOA) IS OUT OF ORDER

Ensure that the number called is correct. The failure is caused by an RPOA or network problem.

218100 THE REGISTRATION/CANCELLATION IS CONFIRMED

This is not an error. It is part of the procedure used to initialize a call and a confirmation of the facility registration/cancellation.

218200 THE REDIRECTION OF THE CALL WAS ACTIVATED

This is not an error. It is a confirmation of the facility registration activation.

218300 THE REDIRECTION OF THE CALL WAS DEACTIVATED

This is not an error. It is a confirmation of the facility registration deactivation.

220000 AN INVALID XID WAS RECEIVED

Ensure that the number called was correct. If the number called was correct, there is a host system programming error or a configuration problem.

220100 AN INVALID XID WAS RECEIVED

Ensure that the number called was correct. If the number called was correct, there is a host system programming error or a configuration problem.

220200 THE WRONG XID WAS RECEIVED

Ensure that the number called was correct. If the number called was correct, there is a host system programming error or a configuration problem.

220300 A XID WAS REQUIRED AND WAS NOT THE FIRST THING RECEIVED

Ensure that the number called was correct. If the number called was correct, there is a host system programming error or a configuration problem.

220400 A DCE CLEAR WAS RECEIVED DURING CALL SELECTION

The failure is caused by a network or DCE problem.

220500 THERE WAS A TRANSITION TO SDLC DURING A MESSAGE

The failure is caused by a network or DCE problem.

220600 AN X.21 MESSAGE WAS TOO LONG FOR THE BUFFER

The failure is caused by a network or DCE problem.

220700 AN ATTEMPT WAS MADE TO SEND AN X.21 MESSAGE TO THE NETWORK IN SDLC STATE

Contact your 5294 Control Unit service representative and report the error code.

220800 AN ATTEMPT WAS MADE TO SEND AN SDLC FRAME TO THE NETWORK IN X.21 STATE

Contact your 5294 Control Unit service representative and report the error code.

220900 AN X.21 MESSAGE WAS RECEIVED IN THE NOT READY QUEUE

Contact your 5294 Control Unit service representative and report the error code.

221000 A TIME-OUT T1 WAS RECEIVED FOR A PROCEED-TO-SELECT RESPONSE

The failure is caused by a network or DCE problem.

221102 A TIME-OUT T2 WAS RECEIVED FOR A SELECTION SIGNAL RESPONSE

The failure is caused by a network or DCE problem.

221103 A TIME-OUT T3A OR T3B WAS RECEIVED FOR A CALL PROGRESS SIGNAL RESPONSE

The failure is caused by a network or DCE problem.

221104 A TIME-OUT T4 WAS RECEIVED FOR A CALL ACCEPTED RESPONSE

The failure is caused by a network or DCE problem.

221300 A CALL COLLISION ERROR OCCURRED

Try the operation again. If the error occurs again, contact your 5294 Control Unit service representative and report the error code.

221400 A CLEAR COMMAND WAS RECEIVED FROM THE NETWORK DURING AN X.21 DATA TRANSFER (SNA/SDLC mode)

Ensure that the number called is correct. If the number called is correct, there is a host system or network problem.

23XX00 A CALL PROGRESS SIGNAL WAS RECEIVED FROM THE NETWORK, BUT A CALL WAS NOT PLACED

The failure is caused by a network or DCE problem.

240000 A CALL PROGRESS SIGNAL WAS RECEIVED THAT WAS NOT VALID

The failure is caused by a network or DCE problem.

2170 Communication Diagnostics Error Codes

These error codes are displayed when an error is detected during communication diagnostics run in the dedicated mode.

The error code is a 6-digit hexadecimal code formatted as follows:

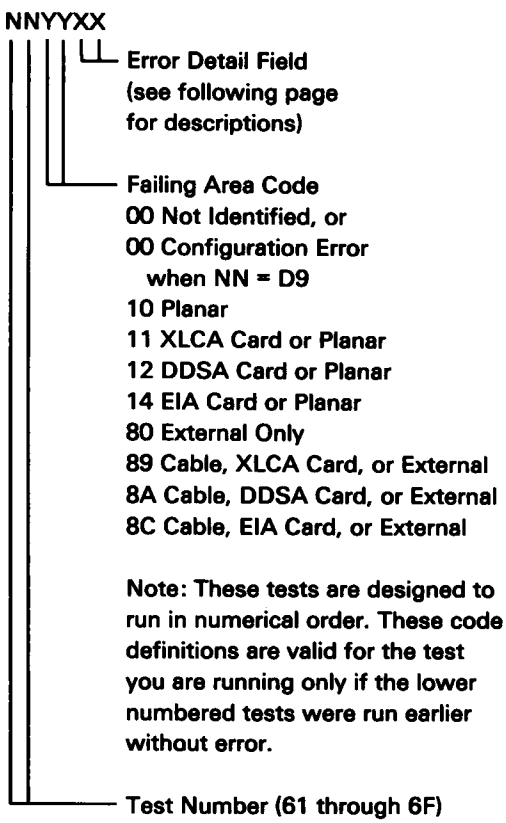

Error Detail Field Definitions

XX	Definition
00	Test did not fail
01	Reserved
02	Test selection not valid
03	Test did not complete in the time permitted
04	Cable wrap setup needed
05	Local modem/DCE wrap setup needed
06	Remote modem/DCE wrap setup needed
07	Diagnostics or customer test sequence completed
08	Reserved
09	DCE configuration error
10	Test Indicator line active
11	Test Indicator line not active
12	Data Set Ready (DSR) line active
13	Data Set Ready line not active
14	Clear to Send (CTS) line active
15	Clear to Send line not active
16	Received Line Signal Detector (RLSD) line active
17	Received Line Signal Detector line not active
35	Receive Clock line at a constant level
36	Transmit Clock line at a constant level
37	Receive Clock line at a constant level when RLSD was not active
38	CTS and RLSD lines both inactive
39	CTS and RLSD lines both active
40	Wrap between New Sync and Ring Indicator lines active
41	Wrap between New Sync and Ring Indicator lines open
42	Wrap between Test Control 1 and RLSD lines active
43	Wrap between Test Control 1 and RLSD lines open
44	Wrap between Ready to Send (RTS) and CTS lines active
45	Wrap between RTS and CTS lines open
46	Wrap between Data Terminal Ready (DTR) and DSR lines active
47	Wrap between DTR and DSR lines open
48	Wrap between Rate Select and TSET lines active
49	Wrap between Rate Select and TSET lines open
4A	Wrap between Select Standby and RSET lines active
4B	Wrap between Select Standby and RSET lines open
4C	Wrap between Test Control 2 and Test Indicator lines active
4D	Wrap between Test Control 2 and Test Indicator lines open
57	Data wrap did not compare
60	Battery-powered storage CRC error
61-67	Planar errors
71-78	A condition not expected occurred while running a test. Probable intermittent failure
83-85	Address or status error while running test. Probable intermittent failure

2180 Power-On Diagnostics Error Codes

These error codes are displayed when an error is detected during the work station controller power-on diagnostics.

D1YYXX	Type Errors
D1YYXX	Not displayed. Used by customer for reporting failures.
D10001	All LEDs are off; fan does not run.
D10002	All LEDs are off; fan runs.
D11001	Power LED is on. All other LEDs are off.
D13002	Power and Ready LEDs are on. Work Station Active LED is off.
D13003	Power and Work Station Active LEDs are on. Ready LED is off.

D2 and D3 Type Errors

The 6-digit hexadecimal code for D2 and D3 type errors is defined as follows:

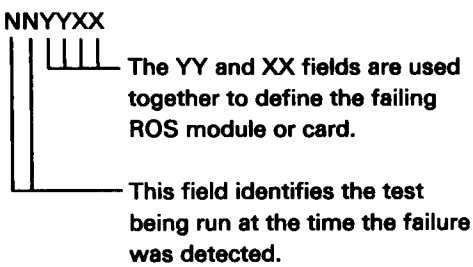

Error Code D2YYXX	Description
0001 through 0007	Reserved
0008	Test Entry Assist feature (second module) failure
0009 through 000F	Feature ROS card failure
0010	Test Entry Assist feature (first module) failure
0011 through 001F	Feature ROS card failure
0020	Test Entry Assist feature (first module) failure

Error Code Description (continued)

0021 through 002F	Feature ROS card failure
0030	Test Entry Assist feature (first module) failure
0031 through 003F	Feature ROS card failure
0040	X.21 switched or X.25 feature module failure
0041 through 007F	Feature ROS card failure
0080	X.21 switched or X.25 feature module failure
0081 through 00BF	Feature ROS card failure
00C0	X.21 switched or X.25 feature module failure
00C1 through 00FF	Feature ROS card failure
0100	Expanded function feature failure
0101 through 01FF	Feature ROS card failure
0200	ROS translate card at C7 failed, if present; otherwise the planar failed
0201 through FFFF	Planar failure

Error Code	Description
D3YYXX	
00XX through 7FXX	Reserved
80XX	Planar storage (16K to 32K)
81XX through 8FXX	Reserved
C0XX	Multiple storage failures
C1XX through FFXX	Reserved

Error Code D73YXX	Failing Ports	Failing FRU
Y=		
1	0	Driver/receiver card (C3)
2	1	Driver/receiver card (C3)
3	0 and 1	Driver/receiver card (C3)
4*	2	Driver/receiver card (C4)
5*	0 and 2	Planar
6*	1 and 2	Planar
7*	0, 1, and 2	Planar
8*	3	Driver/receiver card (C4)
9*	0 and 3	Planar
A*	1 and 3	Planar
B*	0, 1, and 3	Planar
C*	2 and 3	Driver/receiver card (C4)
D*	0, 2, and 3	Planar
E*	1, 2, and 3	Planar
F*	All	Planar
*These codes are valid for 4-port machines only.		

D4 through D77YXX

The 6-digit hexadecimal code for D4 and above type errors is defined as follows:

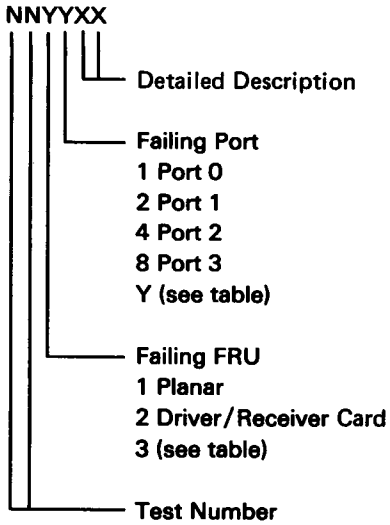

Error Code	Description
D410XX D510XX D610XX	Planar
D710XX	Planar
D73YXX	Planar Driver/Receiver Card External
D77YXX	Driver/Receiver Card Planar Logic Board

D8 and Above

The 6-digit code for D8 and above error codes are defined as follows:

NNYYXX

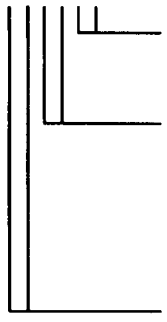

- See Communication Error Codes (2170)
- Failing FRU:
  - 10 Planar
  - 11 XLCA Card/Planar
  - 12 DDSA Card/Planar
  - 14 EIA Card/Planar
- Test Number

D81020	X.21 jumper on and X.21 Switched feature ROS not installed.
D81021	X.21 Switched feature ROS installed and X.21 jumper not on or planar is not X.21 planar.
D81023	Communication adapter failed diagnostics for X.21 function.
All other D810XX	Planar.
D90065	Enter the correct communication card type: EIA, DDSA, or XLCA. Attempt the test again. If it fails again, replace the communication card.
D91YXX	Communication card (see YY above).
DA1060	Battery RAM error. Correct the configuration and attempt the test again. If the test fails again, replace the planar.
DF3001	Planar failure.
EXXXXX	Parity or bus error.
FXXXXX	Verify the proper EC download level. Ensure that all cards and features are mounted and seated properly. If the failure continues, call for service.

2190 Error History Table (ERAP) Description

The ERAP option on the Prime Option Menu for the online tests (2014) is used to display or print the errors that are logged for the work station controller and attached work stations in the host system. A description of the data fields is given on the following pages.

The first table shows the error log for the work station controller. The next table shows the error log for attached display stations. The third table shows the error log for attached printers.

ERAP Table for the Work Station Controller

The printout shown is from a System/36. Printers attached to other systems will have similar printouts.

```
                    ERROR HISTORY TABLE FOR CONTROLLER C03/01                    W1

          FROM: 83/01/01  00:00:01            TO: 83/10/12  06:00:01
                          ............... SENSE BYTES ................
  DATE     TIME     SRC   0      1          2          3          4          BYTES 1-4
YY/MM/DD HH:MM:SS ...HEX.. ................ BINARY ................          DECIMAL
83/10/08 09:14:53 006F  00   0000 0000 0000 0000  0000 1000  1000 1110        2190
83/10/08 09:14:53 006E  00   0000 0000 0000 0000  0000 1000  1001 0000        2192
```

System Reference Code (including error codes) Not used for 004X and 005X.

Error counter for error codes 006X, except 006E and 006F.

LISD for error codes 007X and 008X.

For 11XXXX through 1BXXXX, the first 4 error code characters appear in the Error Code column and the last 2 characters appear in the Sense 0 column.

004X and 005X (except 0046 and 0054) have no sense bytes.

0046 and 0054 use sense bytes 1 through 3. These sense bytes contain the content of the FRMR I-field.

006E and 006F use sense bytes 1 through 4. These sense bytes contain the count of I-frames

The Bytes 1-4 Decimal column is used for 006E and 006F errors only and contains the count in decimal format.

Notes:

1. Sense bytes 1, 2, 3, and 4 will contain zeros when the error code is not 007x, 008x, or 009x.
2. The Date and Time columns may be located either to the left or right side of your screen, depending on the host system.

ERAP Description (continued)

ERAP Table for Attached Display Stations

The printout shown is from a System/36. Printers attached to other systems will have similar printouts.

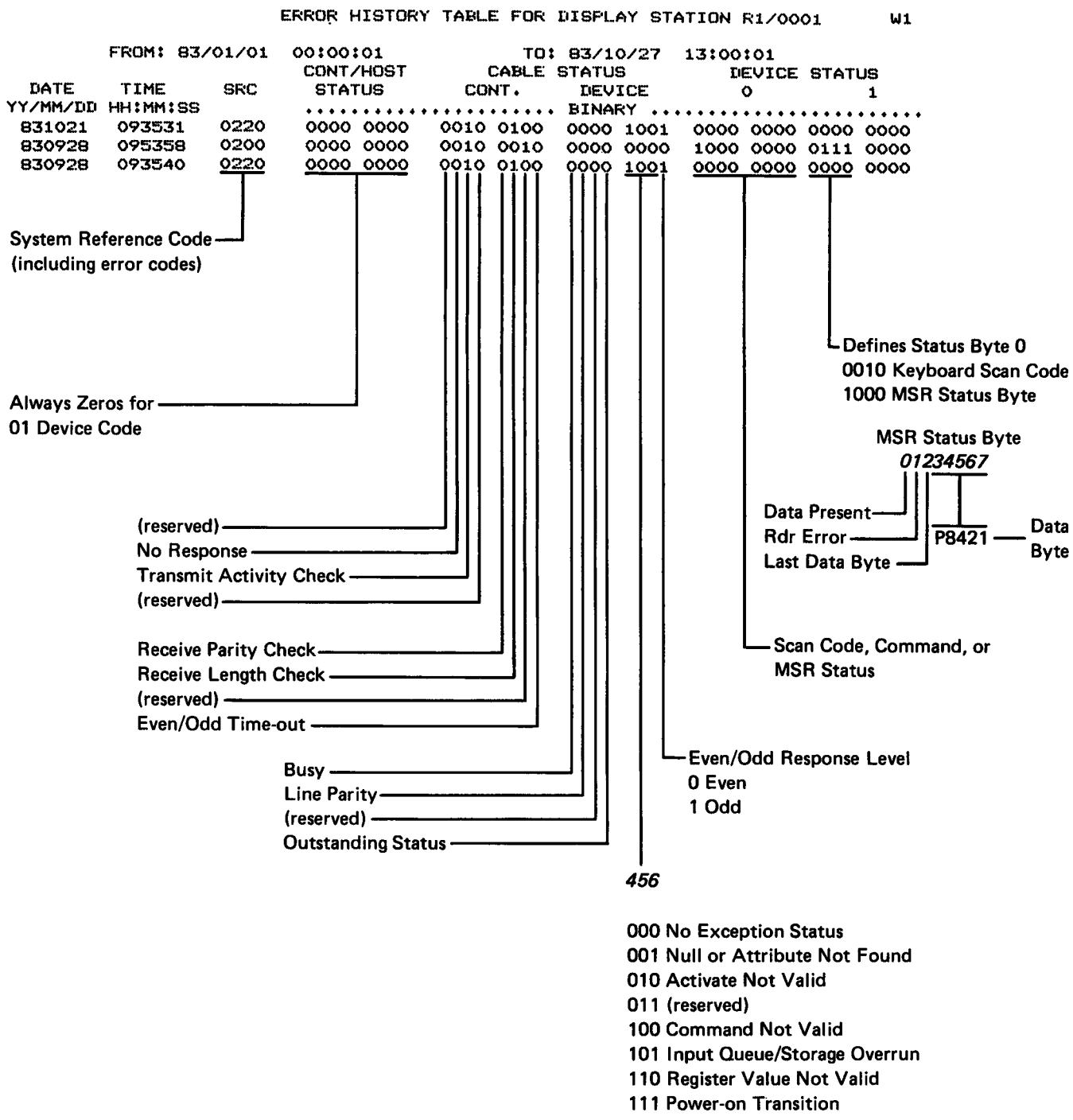

Note: The Date and Time columns may be located either to the left or right side of your screen, depending on the host system.

ERAP Description (continued)

ERAP Table for Attached Printers Using 5294 Control Unit

The printout shown is from a System/36. Printers attached to other systems will have similar printouts.

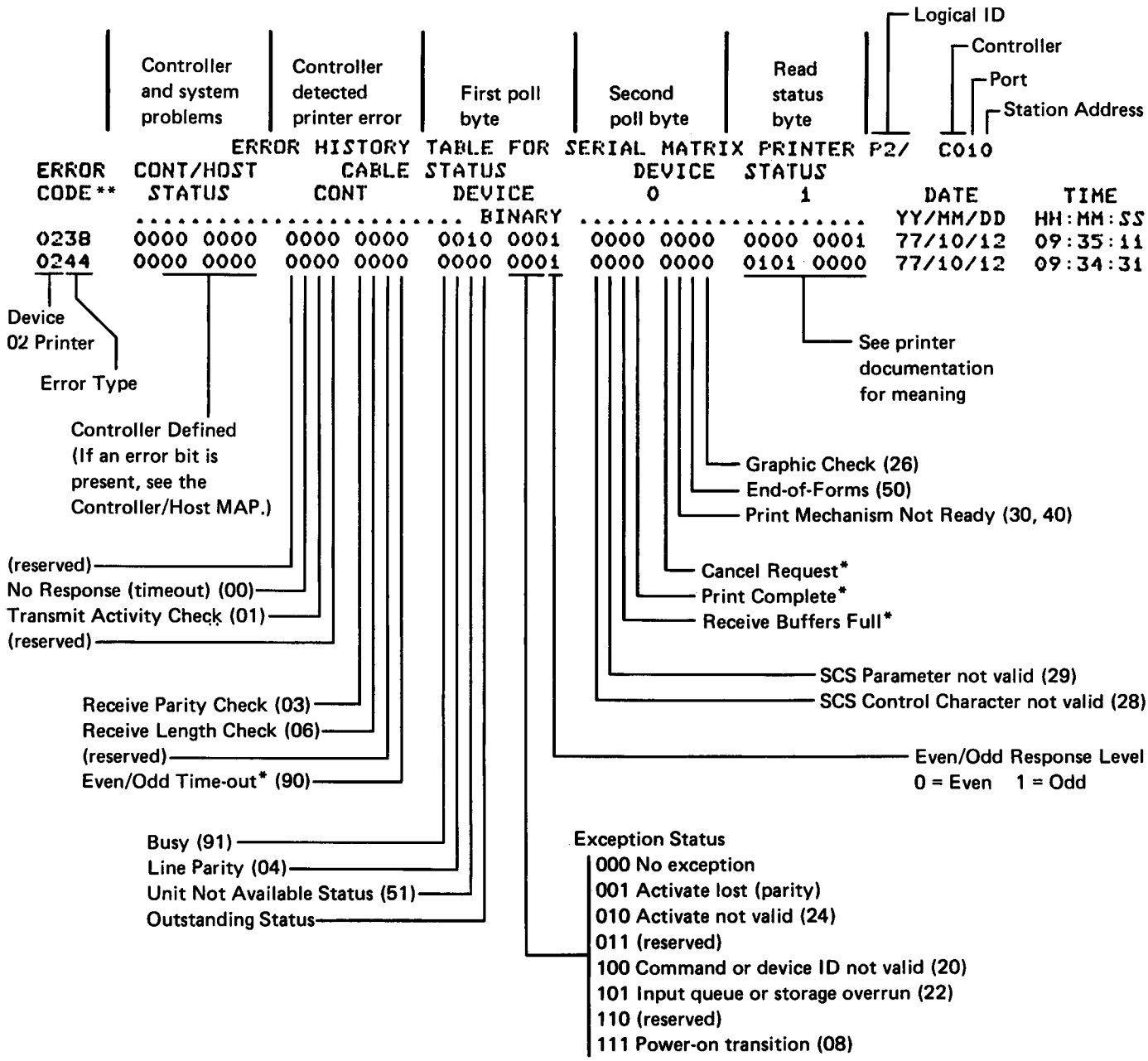

Note: The Date and Time columns may be located either to the left or right side of your screen, depending on the host system.

*Presence of these bits depends on the system that the printer is attached to.
**The 2 digits on the left are used by the system to further identify the error code. Refer to the system manuals for further explanation.

Service Aids

3001 Cable Signal Quality Check

The cable signal quality check can be performed using either an oscilloscope or a dB meter. The purpose of the cable signal quality check is to determine if and where there is a failure in the cable, cable connectors, or an attached work station. The types of failures can be opens, shorts, poor connections, or impedance mismatches.

Note: The customer installs and maintains the cables, so use the following precautions:

1. Do not use this test to check the quality of work done on the cables by a contractor or a customer.
2. If the cable installation is still under contractor warranty, or if a third party is responsible for the quality of the installation, use extra care so that the product or workmanship of the cable is not disparaged.
3. Use this test as a problem determination aid only when instructed to do so by maintenance procedures, after all maintenance procedures have been followed, or if the customer could not determine the problem.
4. Do not use this test for common carrier owned or supplied communication facilities, such as telephone lines.

With an understanding of these precautions, you can also use the test to check cables installed on other products for use on IBM systems.

Test Description Using the Oscilloscope

This test transmits a signal down the line using the square wave from the B-gate output on the oscilloscope. Cables of any length, in sections of a maximum of 1524 meters (5000 feet), can be checked. This test uses the Tektronix 453 oscilloscope; however, other oscilloscopes can be used with the same oscilloscope setup.

For more information, see *An Oscilloscope Measurement Procedure for Twisted and Coax Cables*, S226-3913.

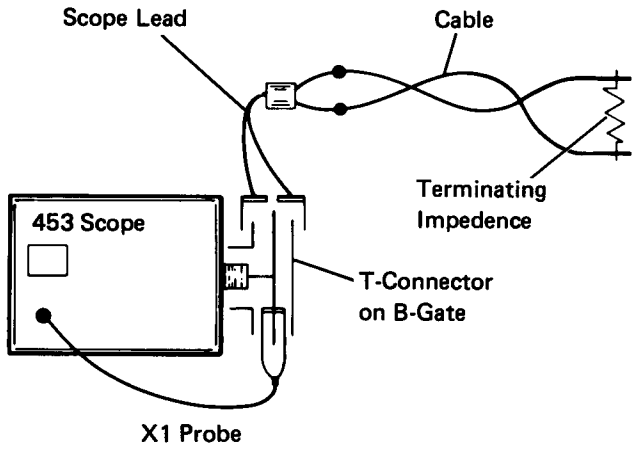

The following figure shows an oscilloscope display of a transmitted signal for a normal cable condition and the change of that signal caused by a shorted or open cable.

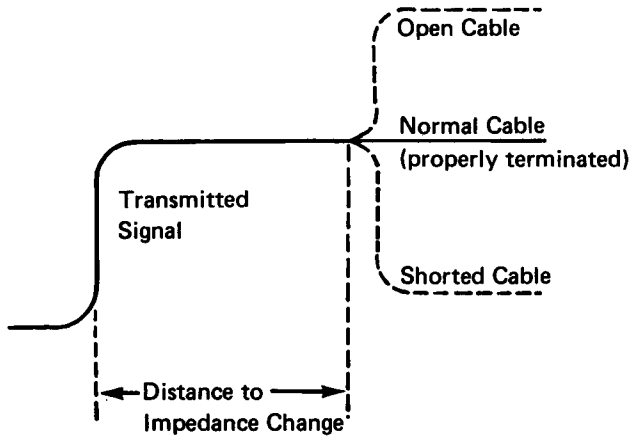

Normal Cable

If the cable is terminated by the correct load impedance (110 ohms), all the energy of the transmitted signal is absorbed by the terminating impedance.

Shorted Cable

If there is a cable failure that changes the impedance of the cable, a part of the signal is reflected back to the signal source. If the cable failure causes the impedance to be lower than normal, the reflected signal will be out of phase and will cause a reduction of the signal.

Measuring Distance

The reflected energy is delayed by the time (t) it takes for the transmitted signal to travel to and from the termination or the fault.

By measuring the time from the start of the B-gate pulse to the start of the change caused by the reflected signal, you can determine the distance to the cable fault or cable end.

After the fault is determined, the distance from the cable end to the fault can be determined by using the following formulas.

For twinaxial (solid poly) cable:

Df = t (μs) × 324.7 feet

Dm = t (μs) × 99 meters

For twinaxial (Teflon[10]) cable:

Df = t (μs) × 344.5 feet

Dm = t (μs) × 105.0 meters

For IBM Cabling System cable:

Df = t (μs) × 366.7 feet

Dm = t (μs) × 111.8 meters

where Df is the distance to the fault in feet.
Dm is the distance to the fault in meters.

t is the time in microseconds from the start of the B-gate pulse to the start of the reflected signal. To find t, multiply the number of scope divisions by the B-sweep time/div.

Note: Pulse rise time increases on long cables. Measure from the point where the reflected pulse just starts to change, as indicated by the arrows in the following figure.

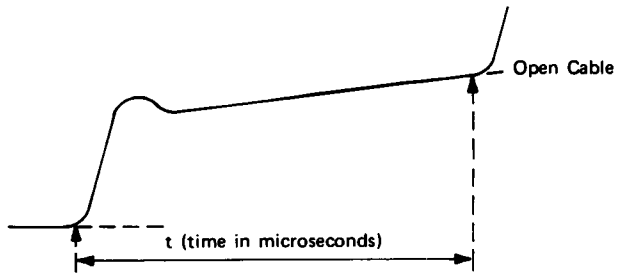

An Example of Measuring Distance: This example is for a solid poly cable, using the preceding formula for measuring distance, with the B time/div set to 0.2 microseconds and the number of oscilloscope divisions at 6.

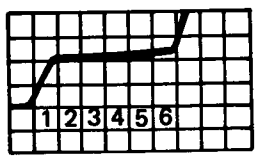

t = 6 divisions x 0.2 microseconds

t = 1.2 microseconds

Df = 1.2 microseconds x 324.7 feet

Df = 390 feet

Dm = 1.2 microseconds x 99 meters

Dm = 119 meters

The fault is indicated by the direction of the signal change (up for an open, down for a short).

Note: If the station protectors are installed, the B-gate pulse may cause the diodes to fire and generate a glitch on the displayed waveform.

10 Teflon is a trademark of E.I. du Pont de Nemours & Co., Inc.

Oscilloscope Setup and Extra Parts Needed

Use X1 probe (X10 probes may be used by changing the vertical input setting) and the following extra parts:

- One coaxial cable with a BNC end and alligator clips (part 1650790); or a BNC to banana plug adapter and multimeter leads.
- One resistor equal to the impedance of the cable (110-ohm resistor); or resistor assembly (part 7362344).
- One BNC T-connector (part 1650789).
- One probe tip to BNC adapter (part 453199).

Use the figure below and do the following steps in order:

1. Connect the T-connector to the B-gate on the side panel of the oscilloscope.
2. Use the probe tip adapter to connect the channel 1 probe to one side of the T-connector.
3. Connect the cable to be tested on the other side of the T-connector. If needed, use the coaxial cable with alligator clips or the BNC to banana plug adapter with CE meter leads. Connect the two alligator clips to the two leads of the cable to check the phase B and A lines of the cable; or to one phase line and the cable shield to check the shield continuity.
4. The other end of the cable to be tested can be connected to the work station if the cable is terminated.
5. When checking shield continuity, the remote end of the cable should be attached to a work station, or it should be terminated as shown:

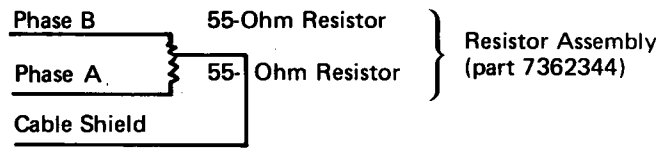

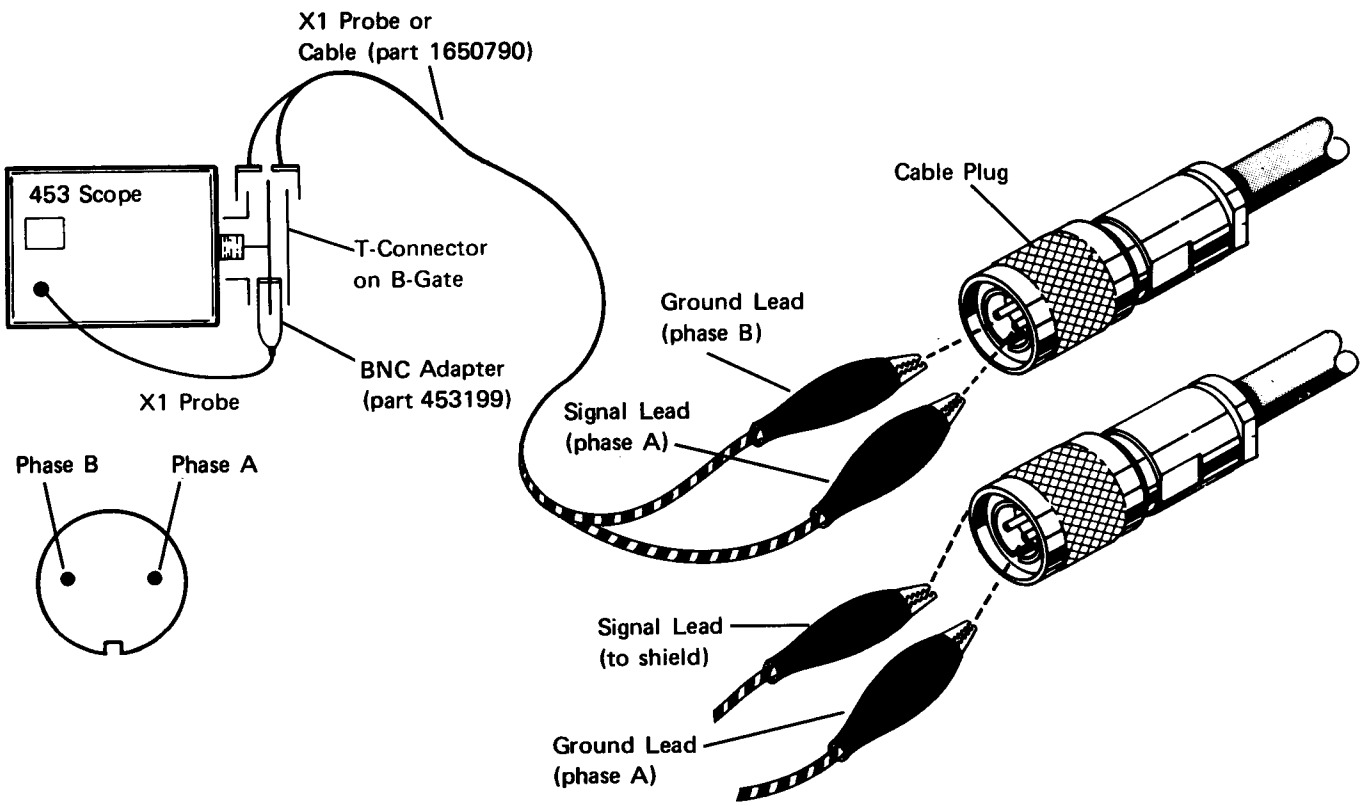

Open Cable

If the failure causes the impedance of the cable to be more than normal, the reflected signal is in phase and causes an increase in the amplitude of the signal.

Oscilloscope Settings

- Mode to Ch 1
- Trigger to Ch 1 Only
- Volt/Div to 0.2 V (initial setting)
- Input to AC

Set A triggering as follows:

- Level to full counterclockwise
- A Sweep Length to Full
- Horiz Display to Delayed Sweep (B)
- B Sweep Mode to B Starts after Delay Time
- A Sweep Mode to Auto Trig
- Delay-Time Multiplier dial fully clockwise (9.5)

Set A- and B-time/division as follows:

- A to 10 microseconds
- Pull to unlock
- B to 0.1 microseconds

Then adjust as follows:

- Adjust the A triggering level for a stable display.
- Adjust the Delay Time to set the rise time of the B-gate pulse (left edge) at the left side of the oscilloscope.

Adjusting the Oscilloscope for the Correct Display

- If no reflection is displayed, you might be looking at the first good part of a long cable with the fault; that is, a cable longer than 100 meters (328 feet).

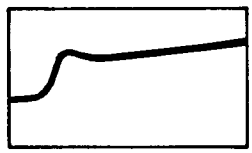

B-sweep time/div = 0.1 μs/div

- If multiple reflections are displayed, the fault is less than 50 meters (164 feet) from your end of the cable, or the B-time base is not set correctly.

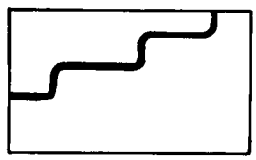

B-sweep time/div = 0.1 μs/div

- Increase the B-time/div from 0.1 to 0.2 or higher until a reflection is displayed; or, decrease the B-time/div to 0.05 so only a single reflection is displayed.

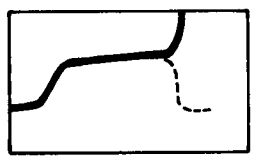

- Once the reflection is displayed, you must short the opposite end of the cable. If the displayed reflection changes by 180 degrees, you are seeing the other end of the cable. If the displayed signal does not change when the opposite end is shorted, the signal reflection is caused by a fault in the cable.

Testing Considerations:

- To determine the length of the cable, it is recommended that you start with the remote end of the cable open (unplugged).
- A 110-ohm resistor or a resistor assembly (part 7362344) can be used to terminate the line, or the line can be terminated by plugging the cable into a work station and setting the work station Terminator switch to 1.
- Short cable segments can be connected up to a maximum length of 1524 meters (5000 feet).
- Look for bad reflection. The B setting of 0.1 microseconds displays cables of up to 100 meters (328 feet) or the first part of longer cables. To display longer cables of up to 1524 meters (feet), use the B setting of up to 2 microseconds.
  - The 0.1-microsecond setting equals 9.9 meters (32.47 feet)/div for a solid poly cable.
  - The 2-microsecond setting equals 198 meters (649.4 feet)/div for a solid poly cable.
- To magnify small changes, adjust the channel 1 Position knob and channel 1 volts/div to a lower setting.
- Major faults at long distances may cause reflections no larger than smaller faults close to the test end of the cable.
- After finding mismatches, you can measure close to the fault to describe it more accurately.
- Faults too close to the tested end of the cable, within 6 meters (20 feet), cause reflections to occur within the rise time of the oscilloscope. So test from both ends of the cable if no clear reflection of the fault is displayed.

Note: The 6-meter (20-foot) measurement is approximate and relies on the oscilloscope that is used.

Oscilloscope Display Examples: See Figures 1-4 through 1-10.

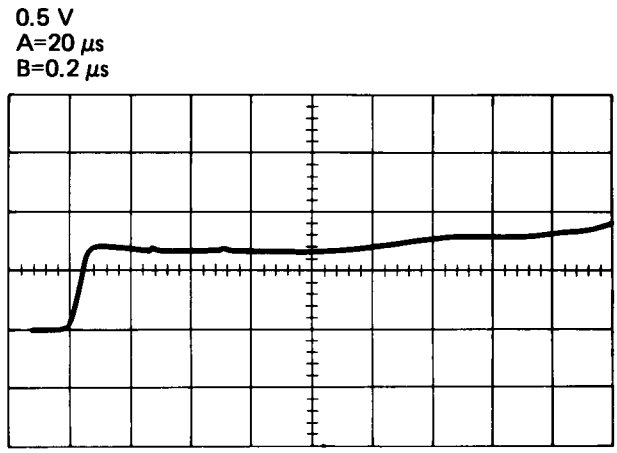

Figure 1-5. Normal Cable (Properly Terminated)

This is a good cable that is 155.5 meters (510 feet) long. A gradual upward slope of the displayed signal is normal after the first division and will appear as a higher upward slope as the B-sweep time increases.

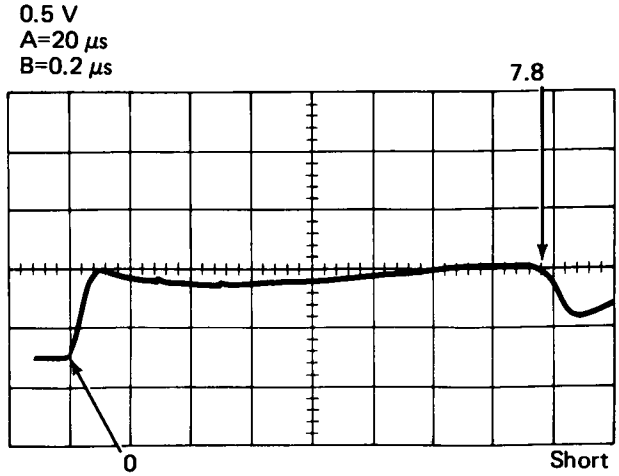

Figure 1-6. Shorted Cable

This cable is shorted at the end to show downward reflection and length.

Length of sweep = 7.8 div
B setting = 0.2 ës/div
7.8 x 0.2 = 1.56 ës
1.56 x 99 = 154 meters or
1.56 x 324.7 = 507 feet

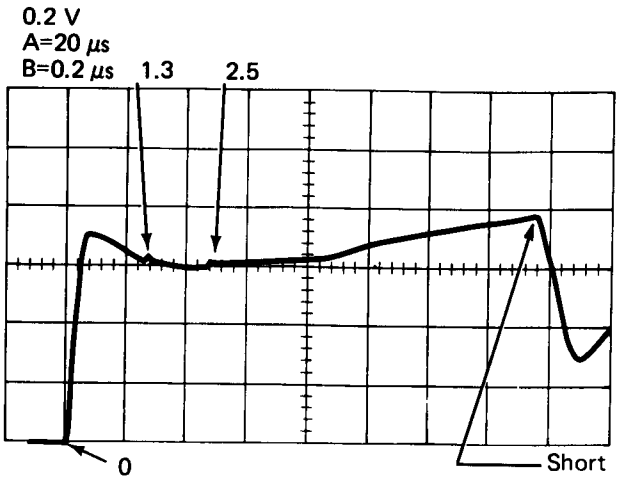

Figure 1-7. Shorted Cable

Same as Figure 1-5 but with a higher vertical gain (0.2 V/div).

The 0 points to start. Notice the two wrinkles a 1.3 and 2.5 divisions from the start. They represent very small mismatches at the work station connectors. These mismatches are at a distance of 26 meters (85 feet) and 50 meters (164 feet) from the start.

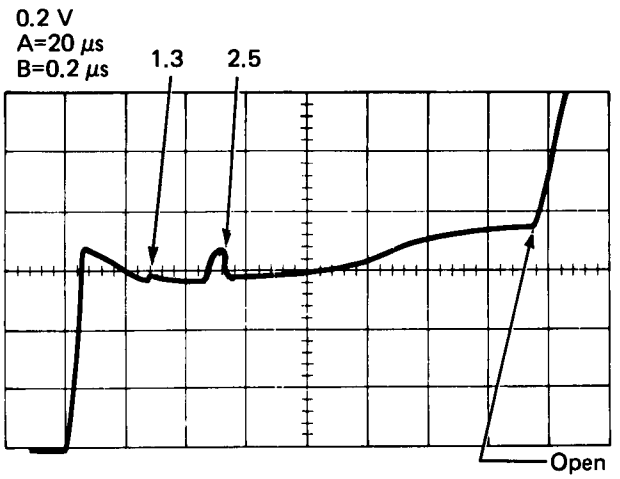

Figure 1-8. Open Cable

Same as Figure 1-6 but with an open end. This is an effective way to measure the length of a cable.

The bumps at 1.3 and 2.5 indicate work station connectors. The large bump at 2.5 indicates a larger mismatch (poor connection) than at 1.3.

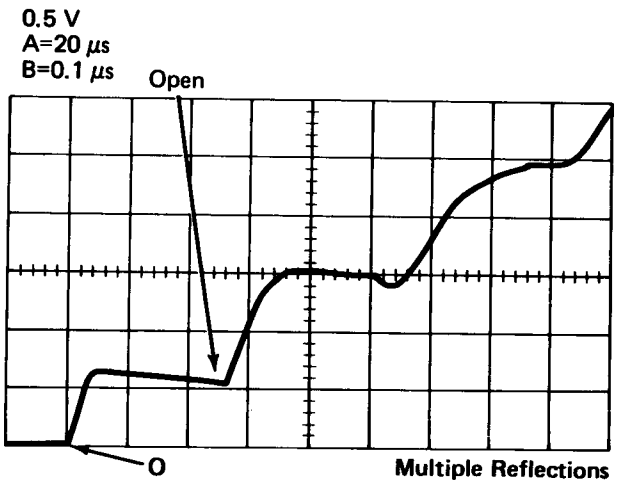

Figure 1-9. Open Cable

This is not a correct display of cable reflections. The multiple reflections are at 26 meters (85 feet) of a good cable with an open end. This display is caused by the wrong vertical gain setting (0.5 V/div) and the wrong B-time/div. Only the first reflection in this figure is important and should be magnified by changing the vertical gain to 0.2 V/div and B-time to 0.05 ës/div.

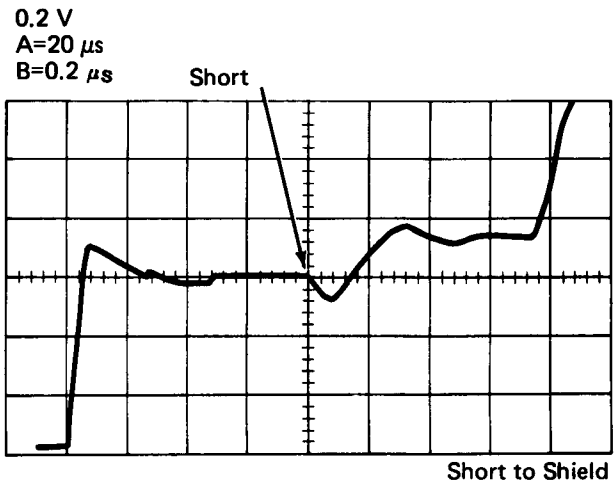

Figure 1-10. Short to Shield

A 155-meter (510 feet) cable with one wire shorted to shield at approximately 78 meters (255 feet). The end is left open. This scope figure is valid for the twinaxial cable only.

Notice the steep slope changes at the arrow.

A reflection of more than 10 percent of the transmitted signal, if measured within 100 meters (328 feet) of the fault, usually indicates an undesirable impedance change.

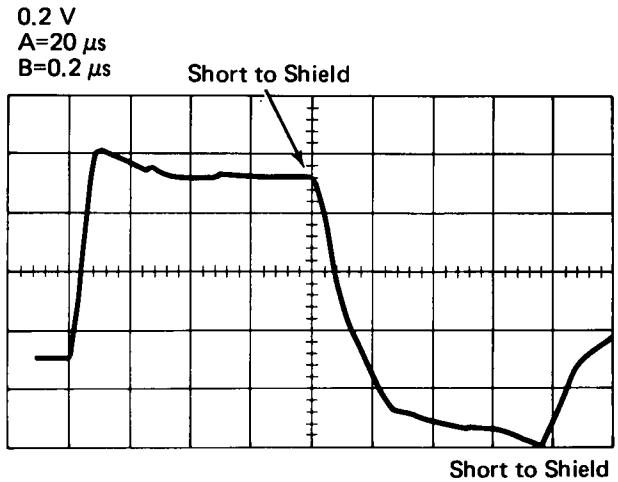

Figure 1-11. Short to Shield

The same condition as in Figure 1-9 but with the alligator clips interchanged. In this figure, the same short shows up much better, because of the incident wave signal being referenced to ground.

3002 Line Continuity and Polarity Reversal Tests

The following guide can be used for testing line continuity and polarity reversals. The checks are for single line segments; however, they could be used for a complete line if the station junctions are connected by a line adapter or a 5250 unit having Cable Thru (if the power is off).

Line Continuity

The only tools needed for line continuity checks are an ohmmeter and jumpers to connect between the connector pins (signal lines) and the connector body (cable shield). When the following checks are made, the resistance values measured should fall inside the indicated ranges (for the maximum 5000-foot line).

With both ends of the cable open and the cable not plugged into a machine, measure (at either end):

- Line to line, higher than 100 000 ohms[11].
- Each line to shield, higher than 100 000 ohms[11].

With both lines tied to the shield at the far end, measure (at nearest end):

- Line to line, less than 110 ohms[11].
- Each line to shield, less than 70 ohms[11].

Line Polarity

After testing the line continuity and making any necessary corrections, check the polarity as follows.

With the line Ⓐ tied to the shield at the far end, measure (at the nearest end):

- Line Ⓐ to shield, less than 70 ohms[11]. (If over 70 ohms, lines are crossed.)

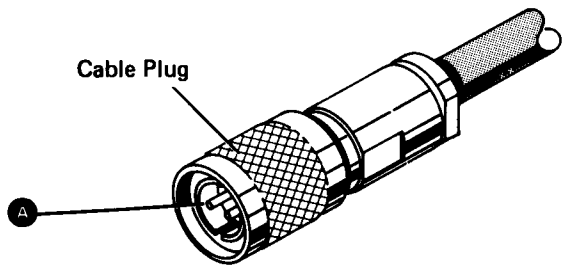

11 Values for shorter lengths are proportionate because this is a linear function.

3003 Work Station Twinaxial Interface Check

1. Power off the work station.

2. For work stations with only one twinaxial socket and no T-connector (without Cable Thru), remove the twinaxial cable and go to step 9.

3. For work stations with two twinaxial sockets (with Cable Thru), go to step 4.

4. Remove any connector from both work station twinaxial sockets.

5. Set the terminator switch (if present) to position 2 (not terminated). If making this check on a 3180 display station, push in and hold the center pin on socket 2 while making the check.

6. Check for the following resistances at **Socket 1**, setting the ohmmeter to a range of 1K or higher.

		Positive	**Negative**
Phase A	to	phase B	> 50K ohms
Phase B	to	phase A	> 50K ohms
Phase A	to	shield	> 2000 ohms
Phase B	to	shield	> 2000 ohms
Shield	to	phase A	> 50K ohms
Shield	to	phase B	> 50K ohms

7. Check for the following resistances, setting the ohmmeter to the X1 scale.

Socket 1		**Socket 2**	
Phase A	to	phase A	< 1 ohm
Phase B	to	phase B	< 1 ohm

8. Set the terminator switch (if present) to position 1 (terminated position). If making the check on a 3180 display station, the terminator is automatically on when the cable is removed from socket 2.

9. Check for the following resistances at **Socket 1**, setting the ohmmeter to the X10 scale.

Positive		**Negative**	
Phase A	to	phase B	100 to 120 ohms
Phase B	to	phase A	100 to 120 ohms
Phase A	to	shield	50 to 60 ohms
Phase B	to	shield	50 to 60 ohms
Shield	to	phase A	50 to 60 ohms
Shield	to	phase B	50 to 60 ohms

10. Skip this step for work stations that do not have Cable Thru. Otherwise, check the following resistances, setting the ohmmeter to the 1K scale or higher.

Socket 1		**Socket 2**	
Phase A	to	phase A	> 100K ohms
Phase B	to	phase B	> 100K ohms

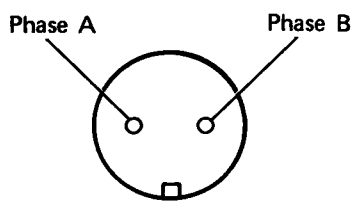

I/O Panel Connector
(from outside of machine)

For your convenience, a form for comments is in the back of this publication.

3004 IBM Cabling System Tests

This section contains tests for accessories used with the IBM Cabling System. The tests are:

- Impedance matching device or direct-connect cable check
- Twinaxial Y test
- Twinaxial terminator assembly test

Impedance Matching Device or Direct-Connect Cable Check

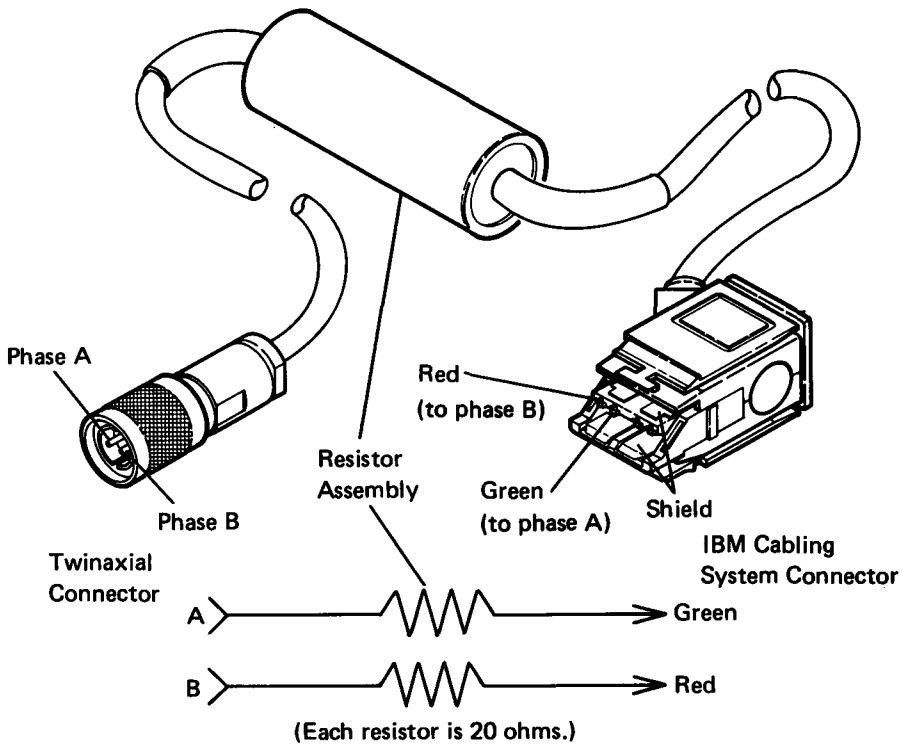

Note: The resistor assembly is not present for direct-connect cables.

Test Procedure

1. Install a test connector on the IBM Cabling System connector of the impedance matching device or direct connect cable.

2. Check for the resistances in the following table.

	Resistance Measurement	
Measure Resistance From	**Impedance Matching Device**	**Direct Connect Cable**
Phase A to green	18 to 22 ohms	< 1 ohm
Phase B to red	18 to 22 ohms	< 1 ohm
Phase A to B	> 100K ohms	> 100K ohms
Phase A to shield	> 100K ohms	> 100K ohms
Phase B to shield	> 100K ohms	> 100K ohms
Twinaxial shield to cabling system shield	< 1 ohm	< 1 ohm

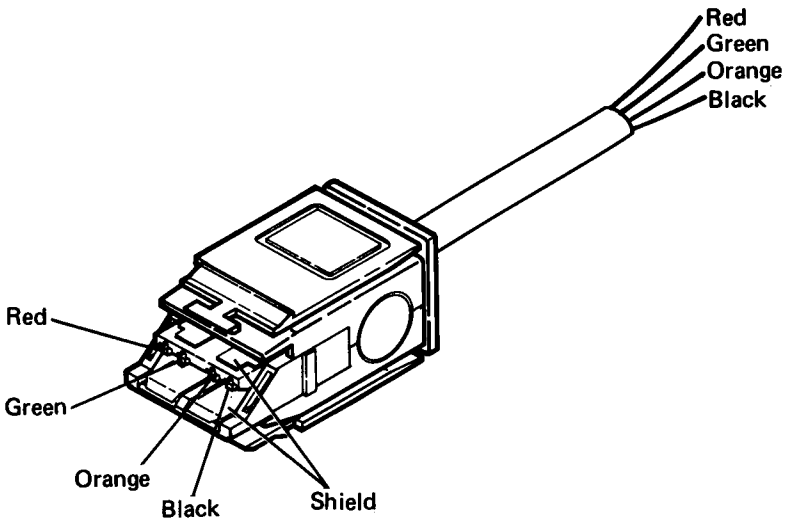

Test Connector

Twinaxial Y Test

Note: All cabling system connectors are equipped with shorting bars that function as the switches in the schematic. The contacts are open when the connector is plugged in.

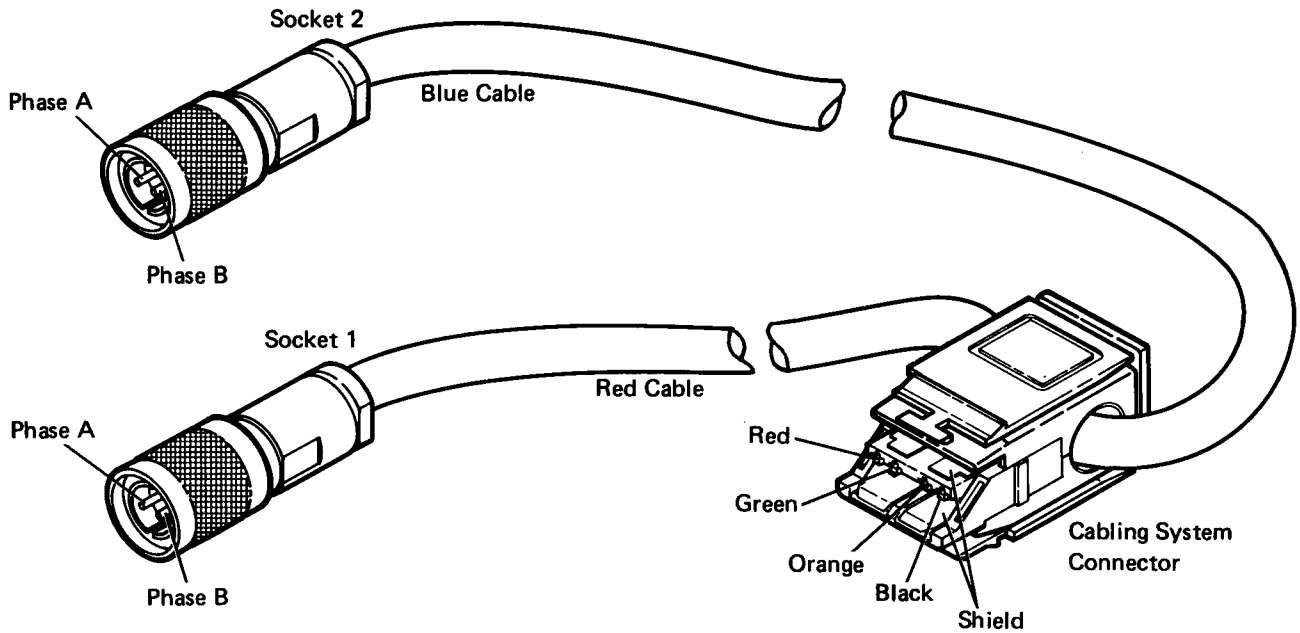

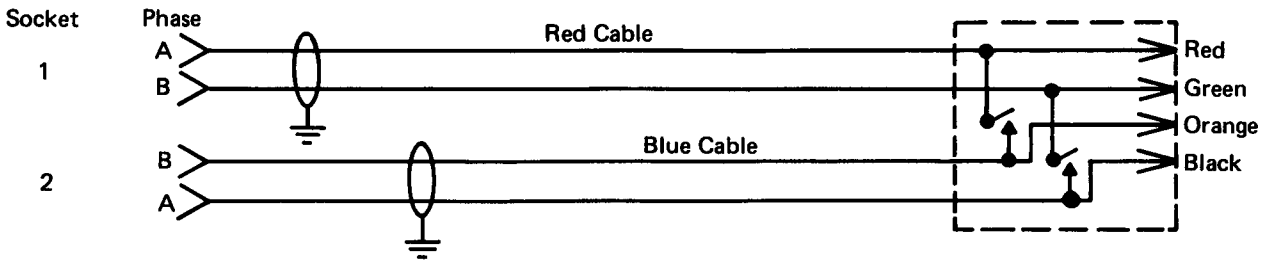

Test Procedure

1. Install a test connector on the IBM Cabling System connector of the Y.

2. Check for the resistances in the following table.

Measure Resistance From	Resistance Measurement
Phase A of red cable to green test lead	< 1 ohm
Phase B of red cable to red test lead	< 1 ohm
Phase A of blue cable to black test lead	< 1 ohm
Phase B of blue cable to orange test lead	< 1 ohm
Twinaxial shield to cabling system shield	< 1 ohm
Phase A of red cable to phase B of red cable	> 100K ohms
Phase A of blue cable to phase B of blue cable	> 100K ohms
Each phase lead to shield	> 100K ohms

Twinaxial Terminator Assembly Test

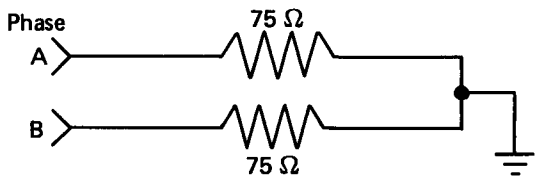

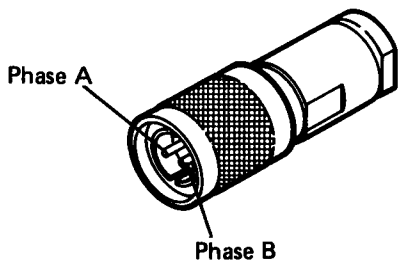

Test Procedure

Check for the resistances in the following table.

Measure Resistance From	Resistance Measurement
Phase A to phase B	150 ohms +/- 10%
Phase A to shield	75 ohms +/- 10%
Phase B to shield	75 ohms +/- 10%

3005 IBM Cabling System Data Path Tests

This section contains the test procedures for the IBM cabling system data paths as follows:

- Test for cable drop from distribution panel to controller
- Test for cable drop from distribution panel to work stations except the last work station on the data path
- Test for cable drop to last work station on the data path
- Test for cable between distribution panels

A test connector like the one shown below is needed for these tests.

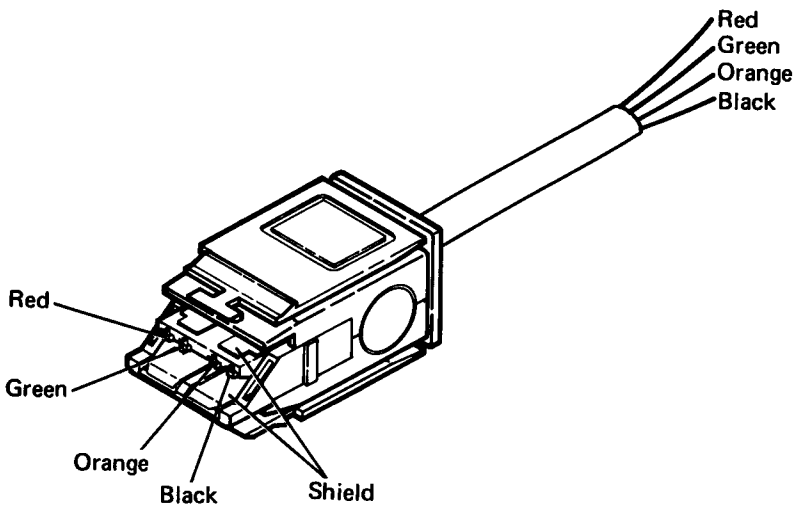

Test Connector

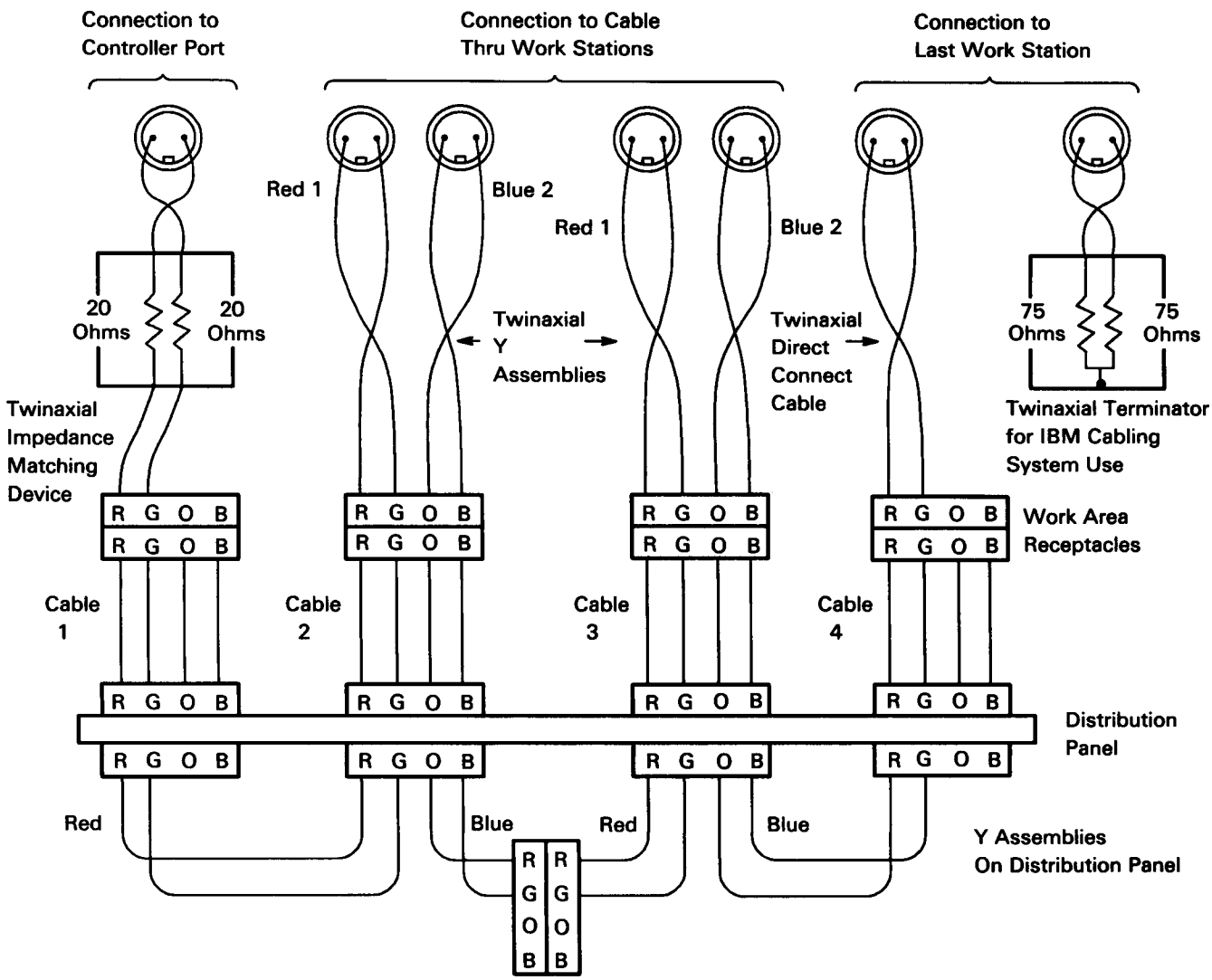

Schematic of a Simple IBM Cabling System Installation Using Twinaxial Accessories

Test for Cable Drop from Distribution Panel to Controller

CAUTION
Ensure that you do not unplug the connectors for any data path other than the one being checked to prevent destroying any active jobs.

Test Procedure

1. Ensure that the controller is disconnected from the cabling system at the cabling system wall connector.

2. Go to the distribution panel and perform the following steps:

   a. Ensure that all connectors are properly labeled so that you can restore the original configuration.

   b. Disconnect the red cable of the Y (or the jumper cable) Ⓐ that connects to the cable drop Ⓑ going to the controller.

   c. Install a test connector on the cable drop going to the controller at Ⓑ.

   d. Check for the resistances in the following table.

      Note: For a continuity test only, use only the first two connections shown in the table.

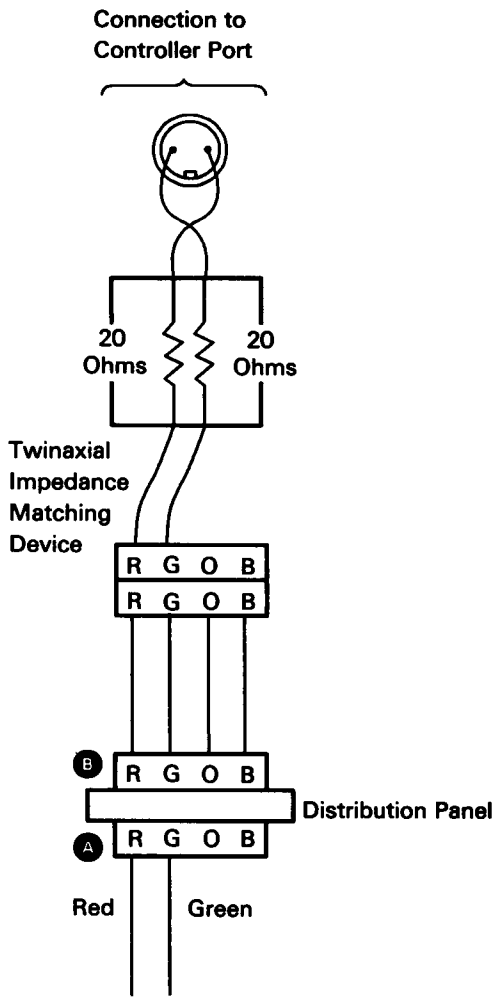

Connect Meter Leads as Shown Below		
Positive	**Negative**	**Normal Resistance**
Red	Orange	0 to 14 ohms[1]
Green	Black	0 to 14 ohms[1]
Red	Green	> 5000 ohms
Green	Red	> 5000 ohms
Shield	Red	> 5000 ohms
Shield	Green	> 5000 ohms

[1]If surge suppressors are installed on the line, the normal resistance is 36 to 54 ohms.

Test for Cable Drop from Distribution Panel to Work Stations Except the Last Work Station on the Data Path

Test Procedure

1. Install a test connector on the red cable of the Y that is connected to the cable drop to be tested.
2. Install a test connector on the blue cable of the Y that is connected to the cable drop to be tested.

   Note: The test connectors are not required for this test but are recommended for ease of connection.
3. Check for the resistances in the following table.

   Note: For a continuity test only, use only the first two connections shown in the table.

Connect Meter Leads as Shown Below		
Positive at Red Cable	**Negative at Blue Cable**	**Normal Resistance**
Red	Red	0 to 14 ohms[1]
Green	Green	0 to 14 ohms[1]
Red	Green	> 5000 ohms
Green	Red	> 5000 ohms
Shield	Red	> 5000 ohms
Shield	Green	> 5000 ohms

[1]If surge suppressors are installed on the line, the normal resistance is 36 to 54 ohms.

Test for Cable Drop to Last Work Station on the Data Path

1. Install the test connector on the cable drop to the last work station.
2. Check for the resistances in the following table.

Connect Meter Leads as Shown Below		
Positive	**Negative**	**Normal Resistance**
Red	Green	140 to 180 ohms[2]
Shield	Red	65 to 95 ohms[2]
Shield	Green	65 to 95 ohms[2]

[2]If surge suppressors are installed on the line, the normal resistance is 175 to 225 for red to green and 90 to 110 for red or green to shield.

3. If only the last work station is failing, perform the following steps:
4. Disconnect the last work station from the cabling system at the cabling system wall connector.
5. Check for the resistances in the following table.

Connect Meter Leads as Shown Below		
Positive	**Negative**	**Normal Resistance**
Red	Orange	0 to 14 ohms[1]
Green	Black	0 to 14 ohms[1]
Red	Green	> 5000 ohms
Green	Red	> 5000 ohms
Shield	Red	> 5000 ohms
Shield	Green	> 5000 ohms

[1]If surge suppressors are installed on the line, the normal resistance is 36 to 54 ohms.

Test for Cable between Distribution Panels

1. Disconnect the Y (or jumper cable) that is connected to the cable between panels at the distribution panel that is nearest to the controller.
2. Go to the distribution panel at the other end of the cable and disconnect any Y (or jumper cable) connected at that end.
3. Install a test connector on the cable between panels at the distribution panel most distant from the controller.
4. Check for the resistances shown in the following table.

   Note: For a continuity test only, use only the first two connections shown in the table.

Connect Meter Leads as Shown Below		
Positive	**Negative**	**Normal Resistance**
Red	Orange	0 to 135 ohms[1]
Green	Black	0 to 135 ohms[1]
Red	Green	> 5000 ohms
Green	Red	> 5000 ohms
Shield	Red	> 5000 ohms
Shield	Green	> 5000 ohms

[1]Resistance for surge suppressors has been included, without surge suppressors, the normal resistance is 0 to 105 ohms.

Tools and Test Equipment

A description of the General and Integrated Logic Probes is on the following pages.

General/Integrated Logic Probe

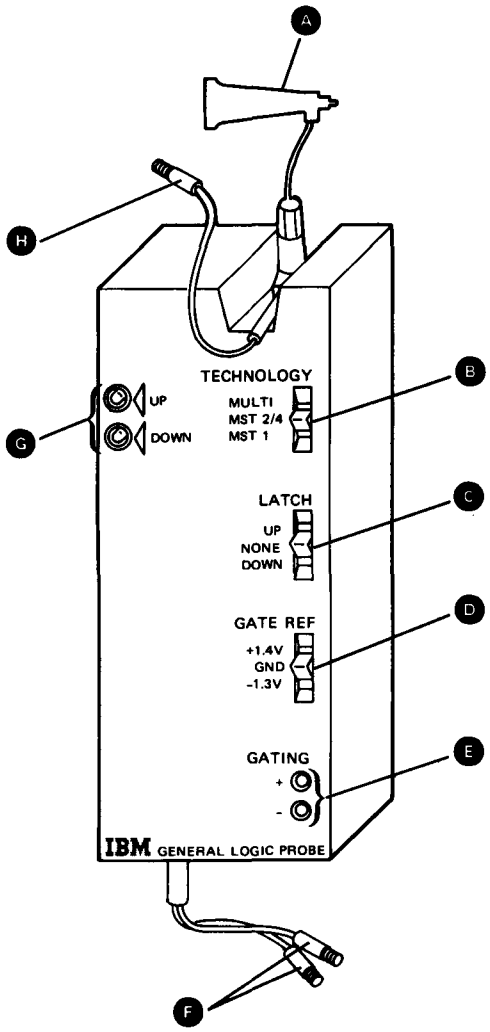

Figure 2-1. General Logic Probe

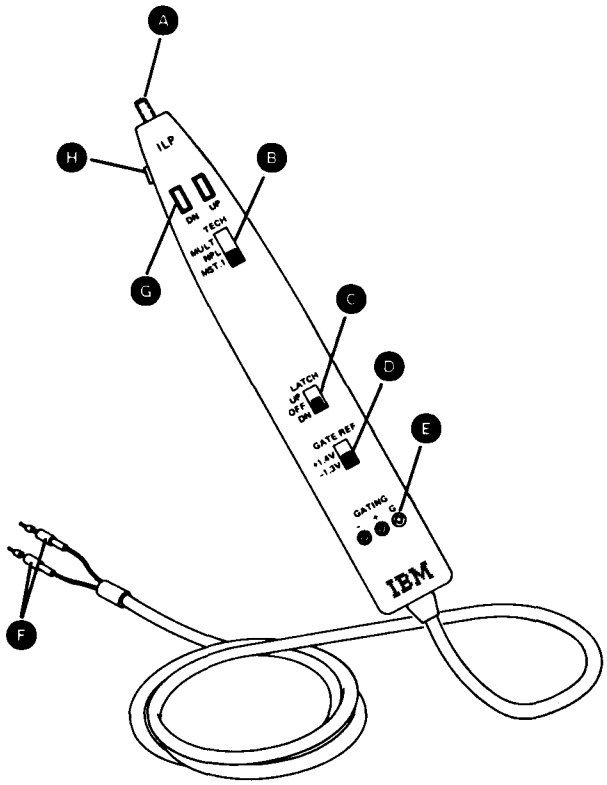

Figure 2-2. Integrated Logic Probe

Logic Probe Description

A **Signal Input Lead**

Connect this lead to the line being probed.

B **Technology (Tech) Switch**

Set this switch to MULTI.

C **Latch Switch**

The NONE/OFF position is used for most of the probing in the work station controller.

D **Gate Ref Switch**

On the General Logic Probe, set this switch to GROUND; on the Integrated Logic Probe, set this switch to +1.4 V unless a different setting is given in the MAPs.

E **Gating Terminals**

These terminals are not normally used for probing in the work station controller. The MAPs will specify connection when needed.

F **Power Leads**

Connect the red lead to +5 Vdc (any D03 pin) and the black lead to ground (any D08 pin) on the logic board unless the MAPs give a different connection.

G **Indicator Lights**

Indicates one of four conditions in the table below:

Condition	Lights	
	Up	Down
Correct logical Up level (+)	On	Off
Correct logical Down level (-)	Off	On
Pulsing between valid levels	On	On
Signal level not valid	Off	Off

H **Signal Ground Lead**

Connect this lead to a ground point nearest the signal probe point.

CAUTION
Wrong indications can result if this lead is connected to frame ground instead of signal ground.

Logic Probe Accessories

Extender cable (GLP only)	453605
SLT ground tip	453167
SLT probe tip	453826
6/32 pin tip	461091
Alligator clip	461159
Ground lead	5500900
Probe tip	453718

Meters and Adapter

Multimeter	1749231
dB meter adapter (includes adapter plug, part 1647116) for the multimeter	1749299
dB meter	453545

Special Tools

Pluggable module extractor	453400
Pluggable module pin straightener	453473
EIA interface tester	453637

Theory

Work Station Controller Description

The IBM 5294 Control Unit (work station controller) is a microprocessor-based controller and communication unit for remote work stations that are used for inquiry and data entry applications. The work station controller communicates with the host system through common carrier data communication facilities using SNA (Systems Network Architecture) in combination with SDLC (Synchronous Data Link Control) or X.25 (a CCITT protocol). Communication between the work station controller and the work stations is by twinaxial cable using IBM twinaxial protocol.

The control unit is available in three models:

- Model 1 is the base version with the controller function similar to the 5251 Model 12 display station/work station controller.
- Model K01 is the Japanese ideographic version of the control unit which attaches ideographic and certain non-ideographic display stations.
- Model S01 is the Southeast Asian region version of the control unit.

Theory for the three models is the same except where noted.

The IBM 5294 Control Unit has all the controller functions that are available on an IBM 5251 Display Station Model 12, except for the support of the 5251 Model 1 and the 5252 Display Stations.

The basic work station controller has two ports which can attach a maximum of four work stations. By installing an extended cluster feature, a maximum of eight work stations can be attached to four ports. When the X.25 feature is installed, a maximum of only six work stations can be attached. In either case, the maximum length of cable off any port is 1525 meters (5000 feet). Only seven work stations can be attached to any one port.

A typical 2-port configuration is shown on the right.

At least one display station must be attached and be located within 6 meters (20 feet) of the work station controller. (It is recommended that this display station be attached to port 0 and given an address of 0.) This display station is needed for set up and servicing the work station controller.

The work stations supported by the Model 1 are:

- Display stations 5251 Model 11, 5291 Models 1 and 2, 5292 Models 1 and 2, 3179 Models 2 and 220, 3180 Model 2, 3196, and the IBM 5150, 5160, and 5170 Personal Computers with 5250 Emulation installed.
- Printers 5219, 5224, 5225, 5256, 5262, 3812, 4210, 4214, and 4224.

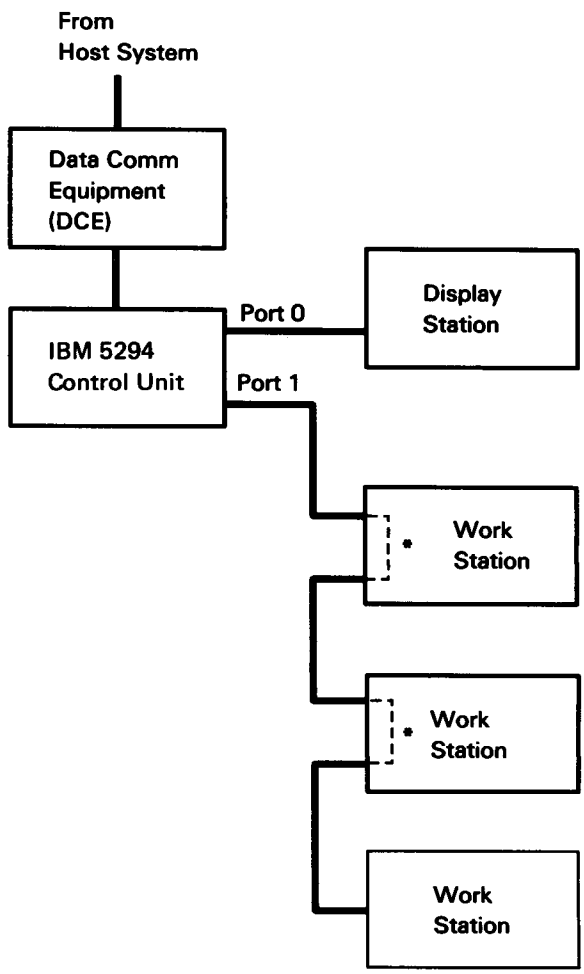

*Cable Thru

The work stations supported by the Model K01 are:

- Display stations 5251 Model 11, 5291, 5292, and 5551
- Printers 5219, 5224, 5225, 5256, and 5553

The work stations supported by the Model S01 are:

- Display stations 5251-11, 5291, 5292, 3179-2, 3180-2, and the IBM 5150, 5160, 5170, 5540, and 5550 Personal Computers.
- Printers 5219, 5224, 5225, 5256, 5262-1, 3812, 4234-2, 5227, and 5553.

Functional Description

The basic IBM 5294 Control Unit logic consists of a planar, a communication card, and a twinaxial driver/receiver card. Communication to the host system is via one of three communication cards: EIA, DDSA, or XLCA. Additional functions, such as X.25 network attachment and copy-to-print, are supported by separate feature modules on the feature card.

Power for the work station controller logic is supplied by a high-frequency power supply which generates ± 5 Vdc and ± 8.5 Vdc.

A description of the basic functions of the work station controller follows. The diagram on the next page identifies the basic functional units.

Planar

The 16-bit microprocessor (MPU) is the heart of the controller and typically performs the arithmetic and logic operations.

The ROS modules are the read-only storage where the microcode for initialization, power-on diagnostics, and basic machine operation are stored.

The RAM modules contain the read/write storage used for buffers, control blocks, and other changing data structures. Information exchanged between the host system and a remote work station is temporarily stored in this RAM.

The work station adapter controls communication between the controller and work stations via the driver/receiver card and the twinaxial ports.

The communication adapter supplies the interface for communication between the host system and the controller by supplying SDLC or X.25 protocol and the connection to one of the following communication feature cards:

- EIA: EIA RS-232C and CCITT V.24/V.28
- DDSA: Digital Data Service Adapter
- XLCA: X.21 Line Communication Adapter (CCITT X.24/X.27)

The battery-powered RAM module is a CMOS RAM that supplies permanent storage of data even after the work station controller is powered off. This read/write storage contains configuration data, hard error log information for errors internal to the work station controller, and permanent link error log information.

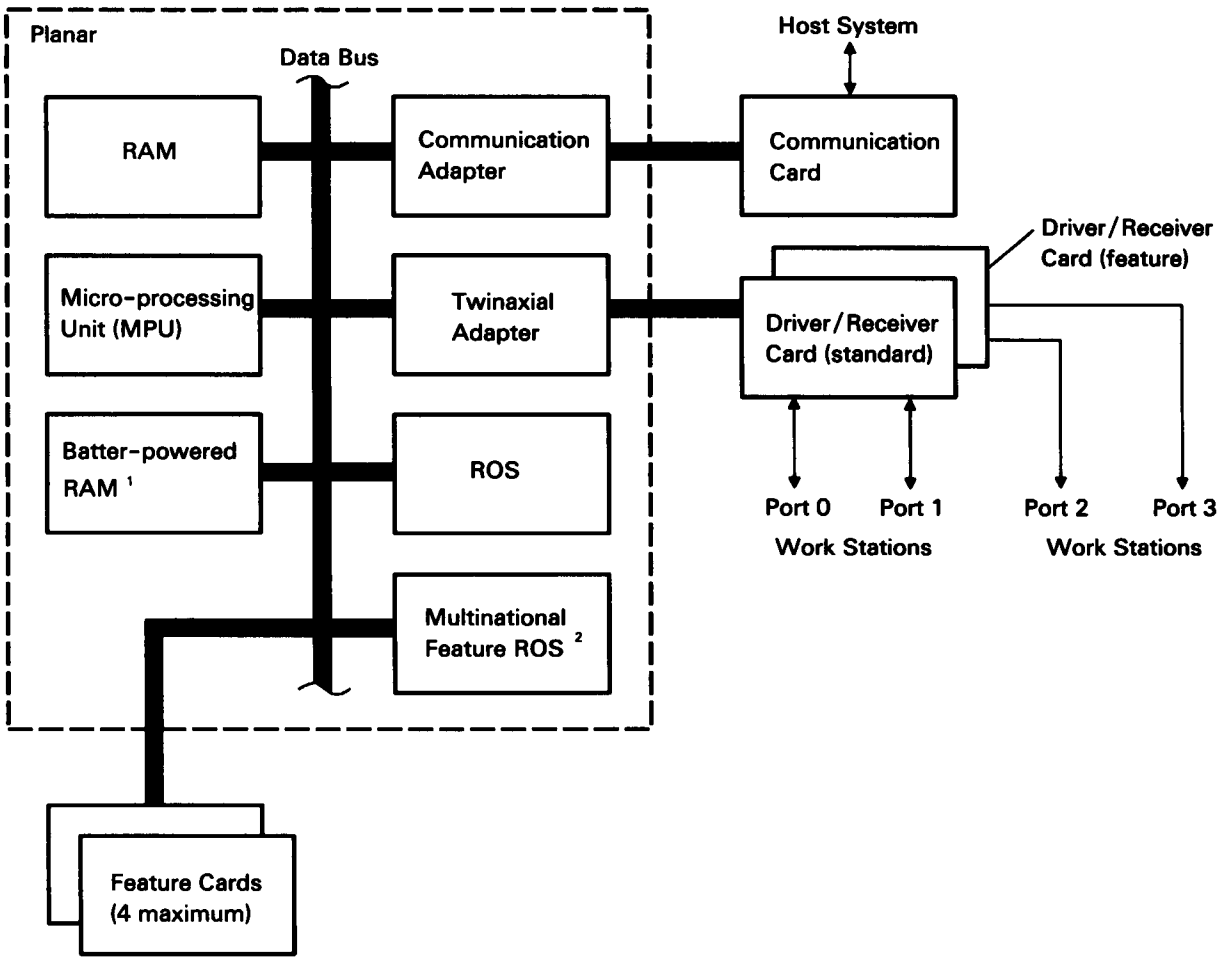

Notes:

1. Battery-powered RAM is storage that maintains data after the work station controller is powered off.
2. Standard for Model 1 World Trade machines (not used for Model K01).

Data Flow

The data flow between a display station attached to the work station controller and the host system is described here.

When a key is pressed at the display station, a scan code is generated for that character. The scan code is put into a 16-bit frame format by the display station logic for transfer to the work station controller in response to the next poll of that display station. The scan code is used by the work station controller to get the represented character out of the translate table. The translate table resides in a controller ROS module.

The work station controller logic verifies that the character taken from the translate table is permitted in the field it is going. The character is then sent back to the display station and is placed in the regeneration buffer.

The display adapter in the display station reads the character from the regeneration storage and generates the correct bit pattern to display that character on the display screen.

After the last character is displayed, the Enter key is pressed and the display station signals the work station controller that there is data to be sent to the host system.

The work station controller requests the data from the display station regeneration buffer and stores the transferred data in the controller RAM.

The controller microprocessor takes the data from storage and puts it in SNA format and then transmits it in the appropriate format for either SDLC or the X.25 feature.

SDLC is the standard communication protocol used by the 5294 Control Unit, unless the X.25 feature is installed. If the X.25 feature is installed, refer to the *X.25 Protocol Description* immediately following.

X.25 Communication Protocols

The X.25 communication protocols are used in place of the SDLC protocol for communication using packet switched networks. The following material defines the X.25 implementation used in the IBM 5294 Control Unit. For more information on the X.25 protocol, see *X.25 General Information Manual*, GA27-3345.

For X.25 operation, the SDLC layer is replaced by three layers: high-level data link control (HDLC), packet, and logical link control (LLC). The HDLC layer is used to communicate between the network DCE and the 5294. The packet layer is used to exchange control data for placing or receiving calls and for transfer of user data between the DTE and the DCE/network. The LLC layer is used to control the flow of data and commands between DTEs.

The HDLC layer is essentially the same as SDLC except for the following differences:

- HDLC is a balanced protocol (link access procedure balanced - LAPB) which permits either station (DTE or DCE) to begin transmission. There are some differences in the commands and responses supported. Also, the 5294 does not operate in NRZI when using X.25 and does not permit use of a leading pad.

- The description of SDLC later in this section applies also to HDLC except for the differences mentioned above.

The following chart shows the levels for X.25 communication:

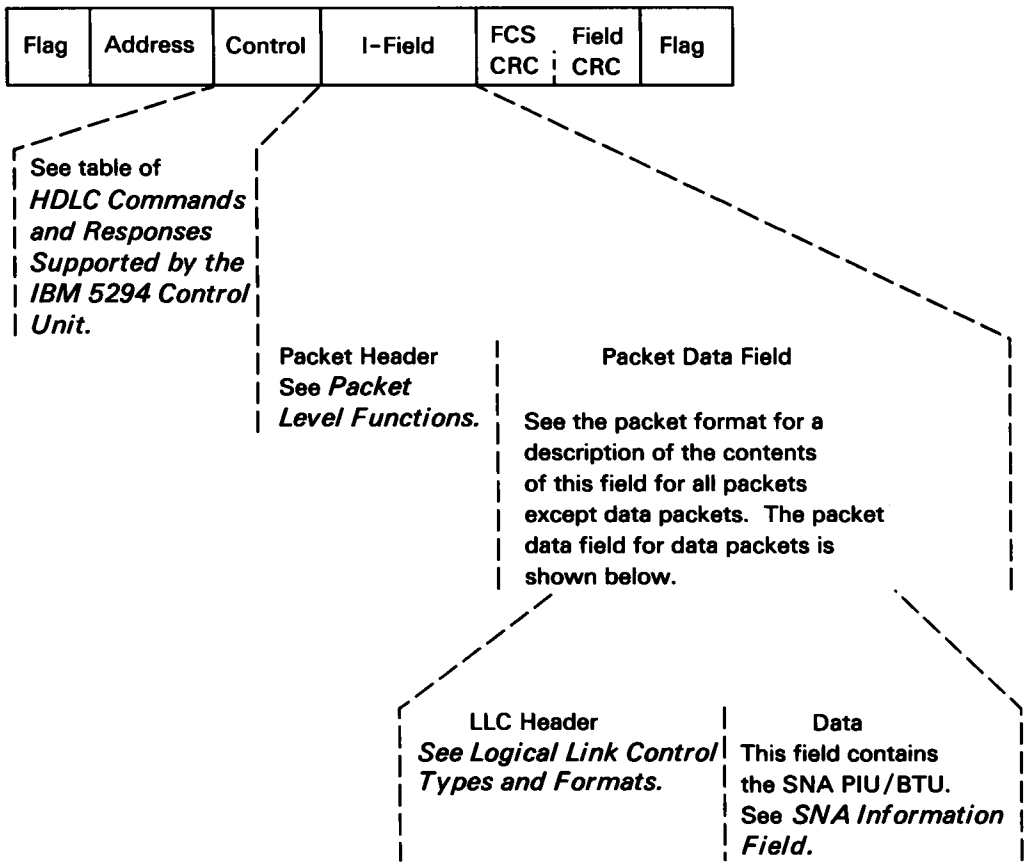

HDLC Commands and Responses Supported by the IBM 5294 Control Unit (Work Station Controller)

The commands and responses in the HDLC frame are contained in the control field. The following figures show the commands and responses supported by the work station controller and any commands not shown are not supported and will cause the work station controller to issue a *frame reject* response.

All supervisory and unnumbered commands are transmitted by IBM SNA X.25 DTEs with P equal to 1. Information frames (I-frames) are transmitted by IBM SNA DTEs with P equal to 0.

Format[1]	Sent Last ↓	Binary Configuration	Sent First ↓	Acronym	Command	Response	I-field Prohibited	Resets Nr and Ns	Confirms Frames Through Nr-1	Definitions
U	001	P	1111	SABM	X		X	X		Set asynchronous balanced mode.
U	000	F	1111	DM		X	X			This station is in disconnected state.
U	010	P	0011	DISC	X		X			Enter normal disconnect mode.
U	011	F	0011	UA		X	X			Acknowledge U commands.
U	100	F	0111	FRMR		X				Invalid command received, Nr count out of range, information field too long, or I-field present when not allowed.
S	Nr	P/F	0001	RR	X	X	X		X	Ready to receive.
S	Nr	P/F	0101	RNR	X	X	X		X	5294 Control Unit has no buffers available.
S	Nr	P/F	1001	REJ	X	X	X		X	Request retransmission of I-frames, starting with frame numbered Nr.
I	Nr	P/F	Ns 0	I	X				X	Sequenced I-frame.

[1]U = unnumbered, S = supervisory, I = information.

HDLC Commands and Responses in Hexadecimal Notation

Unnumbered Commands

Commands	**P**	**P**
SABM	3F	2F DISC 53 43

Unnumbered Responses

Commands	**F**	**F**
UA	73	63 DM 1F 0F FRMR 97 87

Information Commands/Responses (See the Table for X and Y)

I	XY

Supervisory Commands/Responses (See the Table for X)

RR	X1 RNR X5 REJ X9

Hexadecimal Digit for X

Nr =	**P/F**	**P/F**
0	1	0
1	3	2
2	5	4
3	7	6
4	9	8
5	B	A
6	D	C
7	F	E

Hexadecimal Digit for Y

Ns =	**Hex**
0	0
1	2
2	4
3	6
4	8
5	A
6	C
7	E

HDLC Control Field Frame Type/Format Identification

The control field is in one of three different formats, depending on the frame type. The frame type/format is identified as follows:

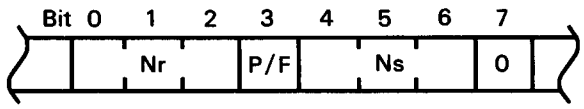

If bit 7 is 0, the frame is an I-frame. See *Control Field for the Information Transfer Format* following this section.

If bit 7 is a 1, then bits 6 and 7 are decoded together as follows:

Bits 6 and 7

01 = the frame is a supervisory frame. See *Control Field for the Supervisory Format.*

11 = the frame is an unnumbered frame. See *Control Field for Unnumbered Format.*

Control Field for the Information Transfer Format

The information transfer format is used to transfer information over a data link. The transmitting station increases its Ns count and, if the receiving station receives a valid sequenced frame, the receiving station increases its Nr count.

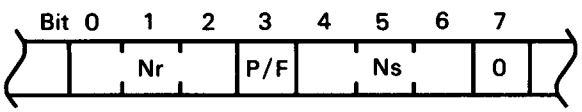

Bits 0 through 2

These bits contain the sequence number expected in the Ns field of the next I-frame. This is the Nr count.

Bit 3

This bit is the poll/final (P/F) bit. This bit is always 0 for I-frames transmitted by IBM SNA X.25 DTEs.

Bits 4 through 6

These bits contain the sequence number of the frame. This is the Ns count.

Bit 7

Bit 7 is 0 to identify that this frame is in the I-frame format.

Control Field for the Supervisory Format

The supervisory format is used to acknowledge information frames, to request retransmission of information frames, to report a busy condition, and to clear a busy condition.

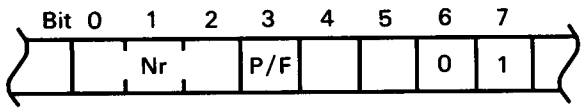

Bits 0 through 2

These bits contain the sequence number of the next expected frame. This is the Nr count.

Bit 3

Bit 3 is the poll/final bit. The poll bit, from the sending station, requires transmission from the receiving station. The receiving station sends a final bit in the last frame of it's response.

Bits 4 and 5

These bits are used to identify the command/response. They are coded as follows:

00 = Receive Ready (RR). This command or response indicates that the originating station is ready to receive data and has no data to send. Receive ready also acknowledges I-frames with sequence counts through Nr minus 1 and can be used to clear a busy condition previously reported.

01 = Receive Not Ready (RNR). This command or response indicates that the station has a busy condition and cannot receive additional I-frames. Receive not ready also acknowledges I-frames with sequence counts through Nr minus 1.

10 = Reject (REJ). This command or response requests retransmission of I-frames starting with frame numbered Nr and can be used to clear a busy condition previously reported.

Bits 6 and 7

These bits are 01 to identify that this frame is in the supervisory format.

Control Field for Unnumbered Format

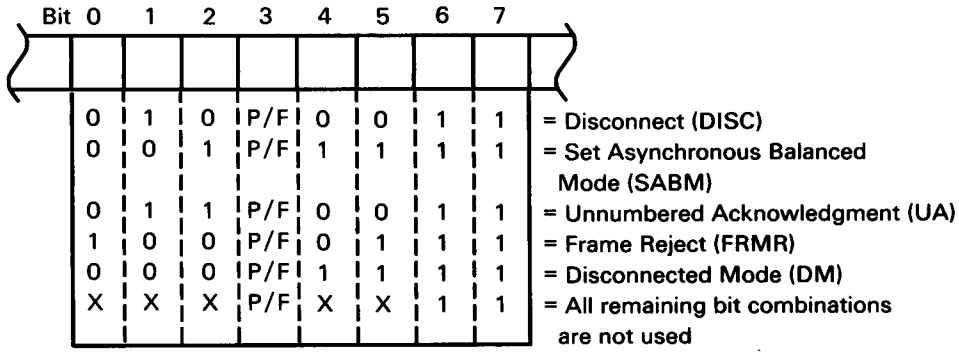

Bit	0	1	2	3	4	5	6	7	
	0	1	0	P/F	0	0	1	1	= Disconnect (DISC)
	0	0	1	P/F	1	1	1	1	= Set Asynchronous Balanced Mode (SABM)
	0	1	1	P/F	0	0	1	1	= Unnumbered Acknowledgment (UA)
	1	0	0	P/F	0	1	1	1	= Frame Reject (FRMR)
	0	0	0	P/F	1	1	1	1	= Disconnected Mode (DM)
	X	X	X	P/F	X	X	1	1	= All remaining bit combinations are not used

The unnumbered format is used to perform data link control functions.

Bits 0 through 2, 4 and 5

These bits identify the unnumbered commands and responses.

Bit 3

Bit 3 is the poll/final bit. The poll bit, from the sending station, requires transmission from the receiving station. The receiving station sends a final bit when it has completed the transmission of the response.

Bits 6 and 7

These bits are set to 11 to identify that this frame is in the unnumbered format.

The commands and responses for the unnumbered format are described as follows:

- Disconnect (DISC): This is a command from a sending station that places the receiving station in the normal disconnect mode (NDM). The receiving station lets the sending station know that it has received the command by responding with an unnumbered acknowledgment (UA), if in the asynchronous balanced mode, and with a disconnect mode (DM) if in the disconnected mode. Either station may send the DISC command.

- Set Asynchronous Balanced Mode (SABM): This is a command that places the receiving station in asynchronous balanced mode (ABM). The response to SABM is an unnumbered acknowledgment (UA). When an SABM command is sent and received, the sequence counts (Nr and Ns) are reset to zero at both the sending and receiving stations.

- Unnumbered Acknowledgment (UA): This is a positive response to a DISC or an SABM command. It indicates that the command has been accepted.

- Frame Reject: This is a response to received commands that are not valid, not supported, have an Nr count out of range, an I-field too long, or an I-field that is included with a command prohibiting an I-field.

- Disconnected Mode (DM): This is a response from the receiving station, which indicates that the station is in disconnected mode.

Packet Level Functions

Four functions are performed at the packet level: setup, call clearing, data transfer, and restart. The setup and clearing functions are performed by call setup/clearing packets. The data transfer function is performed by flow control and data packets. The restart function is performed by restart packets. These packet types and formats are defined in the following paragraphs.

Packet Header and Format

The packet header is 3 bytes long and has the following format (see note):

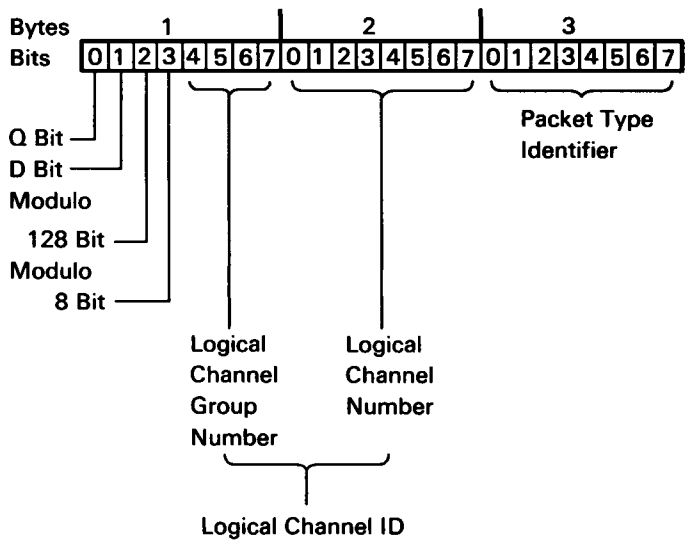

Q Bit — This bit is on if the LLC layer uses qualified logical link control (QLLC) and this is a LLC command or response.

D Bit — This bit is the delivery confirmation bit. It is always set to 0 for transmissions from the 5294. If it is on (a 1) in a received packet, the 5294 will send a clear request (SVC) or a reset request (PVC) with diagnostic code hex E9.

Modulo 128 — This bit indicates Modulo 128 sequence numbering.

Modulo 8 — This bit indicates Modulo 8 sequence numbering.

Note: For modulo 128 the packet header is 4 bytes long with a 2 byte packet type identifier.

Packet Type Coding for Packet Types Supported by 5294

Hex Code	General Type	When Received by 5294	When Sent by 5294
0B	Setup/clearing	Incoming call	Call request
0F	Setup/clearing	Call connected	Call accepted
13	Setup/clearing	Clear indication	Clear request
17	Setup/clearing	Clear indication	Clear confirmation
x1	Flow control	Receive ready (RR)	RR
x5	Flow control	Receive not ready (RNR)	Not sent by 5294
1B	Flow control	Reset indication	Reset request
1F	Flow control	Reset confirmation	Reset confirmation
FB	Restart	Restart indication	Restart request
FF	Restart	Restart confirmation	Restart confirmation
See note	Data	Data	Data

Note: Data Packet Header Coding for B xxxmyyy0:

xxx = Packet received sequence count.

m = On if more packets containing a segment of the same PIU are following (used with QLLC and ELLC).

yyy = Packet send sequence count.

0 = Identifies a data packet.

Packet Types Not Supported by 5294

Hex Code	Type	5294 Action		
		In Data Transfer State		
		If PVC	If SVC	In Other States
23	Interrupt	Sends a reset request packet with diagnostic code of 1B	Sends a clear request with a diagnostic code of 17	Discards packet
27	Interrupt confirmation			

Packet Data Field Contents

The contents of the packet data field are determined by the packet type.

Data Packets

The data field contains the LLC header and/or the SNA PIU (see *Logical Link Control Types and Formats*).

The call accepted, clear confirmation, restart confirmation, reset confirmation, receive ready, and receive not ready packets do not have a data field.

Other Packets

The data field for other packet types follows.

Data Fields (bytes 3 and following) for Incoming Call and Call Request Packets

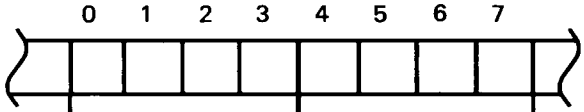

Byte 3	Calling DTE address length / Called DTE address length
Bytes 4 through n	Calling DTE address (up to 15 digits)
Bytes n+1 to 2n-3	Called DTE address (up to 15 digits)
Byte 2n-2	0 | 0 | Facility length (number of data bytes)
Bytes 2n-1 to x	Facilities field (see below)
Byte x+1 to x+12	User data field (see below)

Facilities Field

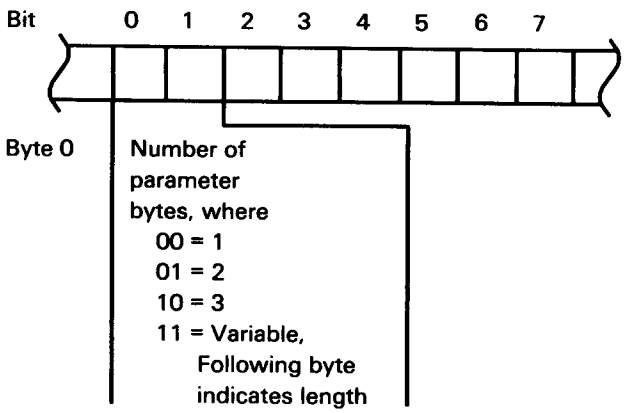

Bytes 1-n contain the facility parameters. The 6-bit facility code identifies the facility. For example, 000001 indicates a reverse charging facility. Note that the meaning of the facility code may be different from the X.25 recommendation for some networks.

The facility field (bytes 0-n) will be repeated for each facility.

User Data Field

Byte 0	Logical Link Control ID, where hex C2 = PSH C3 = QLLC C6 = ELLC
Bytes 1 through 3	000000 = no password 010000 = password used (This byte is not sent by the 5294 if no password is entered by the operator.)
Bytes 4 through 11	Password (followed by blanks if password is less than 8 bytes long). Present only when a password is used.

Call Connected Packets Data Field Contents

The format and coding for the connected packets is the same as that for the incoming call or call request packets with the following exceptions:

- The calling and called DTE address fields may not be present
- The user data field will not be present

Reset, Clear, and Restart Packets

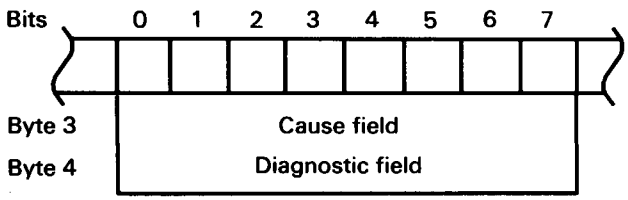

Cause Field Coding: For a reset, clear, or restart request (sent by the 5294), the field will always be set to hex 00. For a reset, clear, or restart indication (sent by the DCE), the definition of the cause code field can vary by network. See the network provider for the correct meaning. The CCITT recommended cause codes are listed in this section.

Diagnostic Field Coding: For a reset, clear, or restart indication packet, this field may or may not be present and when present, the definition may not correspond to the CCITT recommendation (see *X.25 Diagnostic Field Coding* for recommended codes). For reset, clear, and restart request packets sent by the 5294 the coding is shown in the following list.

Diagnostic Field Coding for Clear, Reset, and Restart Request Packets (Sent by the 5294)

Hex Code	Description
00	Normal initialization
14	Packet type not valid for state p1
15	Packet type not valid for state p2
17	Packet type not valid for state p4
1B	Packet type not valid for state d1
50	General ELLC error
51	Undefined C-field
52	Unexpected C-field
53	Missing I-field
54	Undefined I-field
55	I-field too long
56	PDU reject received
57	Header not valid
58	Data received in wrong state
59	Time out (LT1 x LN2) condition
5A	LNr not valid
5B	Recovery rejected/terminated
60	General PSH error
61	PSH sequence error
A1	'M' bit packet sequence not valid
A2	Packet type received not valid
A6	Packet too short
A7	Packet too long
AB	Ps not valid
AC	Pr not valid
AD	D bit received not valid
D2	PIU too long
E6	Facility parameters not supported
E7	Facility not supported
E8	Unexpected calling DTE
E9	D bit request not valid
EA	RESET INDICATION on virtual call
EB	Protocol identifier not valid
EC	Password mismatch
ED	Facility length not valid

Cause Code Field Coding for Clear, Reset, and Restart Indication Packets

CCITT recommended (1980 version) coding for the cause code field of clear, reset, and restart indication packets.

Note: For some networks, the cause field may be 00 for network originated packets.

Coding of Cause Field in CLEAR INDICATION Packet

Bits	8	7	6	5	4	3	2	1
DTE Originated	0	0	0	0	0	0	0	0
Number busy	0	0	0	0	0	0	0	1
Out of order	0	0	0	0	1	0	0	1
Remote procedure error	0	0	0	1	0	0	0	1
Reverse charging acceptance not subscribed[1]	0	0	0	1	1	0	0	1
Incompatible destination	0	0	1	0	0	0	0	1
Fast select acceptance not subscribed[1]	0	0	1	0	1	0	0	1
Invalid facility request	0	0	0	0	0	0	1	1
Access barred	0	0	0	0	1	0	1	1
Local procedure error	0	0	0	1	0	0	1	1
Network congestion	0	0	0	0	0	1	0	1
Not obtainable	0	0	0	0	1	1	0	1
RPOA out of order[1]	0	0	0	1	0	1	0	1

[1]May be received only if the corresponding optional user facility is used.

Coding of Cause Field in RESET INDICATION Packets

Bits	8	7	6	5	4	3	2	1
DTE Originated	0	0	0	0	0	0	0	0
Out of order[1]	0	0	0	0	0	0	0	1
Remote procedure error	0	0	0	0	0	0	1	1
Local procedure error	0	0	0	0	0	1	0	1
Network congestion	0	0	0	0	0	1	1	1
Remote DTE operational[1]	0	0	0	0	1	0	0	1
Network operational[1]	0	0	0	0	1	1	1	1
Incompatible destination	0	0	0	1	0	0	0	1

[1]Applicable to permanent virtual circuits only.

Coding of Cause Field in RESTART INDICATION Packets

Bits	8	7	6	5	4	3	2	1
Local Procedure Error	0	0	0	0	0	0	0	1
Network congestion	0	0	0	0	0	0	1	1
Network operational	0	0	0	0	0	1	1	1

For your convenience, a form for comments is in the back of this publication.

Diagnostic Field CCITT Recommended Coding for Network Generated Clear, Reset, Restart Indication and Diagnostic Packets

CCITT recommended (1980 version) coding of packet-mode network generated diagnostic fields in clear, reset, restart indication, and diagnostic packets.

Notes:

1. Not all diagnostic codes necessarily apply to a specific network, but those used are usually as coded in the table.
2. A given diagnostic need not apply to all packet types.
3. The first diagnostic in each grouping is a generic diagnostic and can be used in place of the more specific diagnostics within the grouping. The hex 00 diagnostic code can be used in situations where no additional information is available.
4. Clearing, resetting, and restarting cause codes are defined in the preceding table, Cause Code Field Coding for Clear, Reset and Restart Indication Packets.
5. Hex codes 50 through 7F are not assigned.
6. Hex codes 80 through FF are reserved for network specific diagnostic codes.

Diagnostics	Hex Range	Bits 8	7	6	5	4	3	2	1	Decimal	Hex
No Additional Information	00-0F	0	0	0	0	0	0	0	0	000	00
P(S) not valid		0	0	0	0	0	0	0	1	001	01
P(R) not valid		0	0	0	0	0	0	1	0	002	02
Packet Type Not Valid	10-1F										
General		0	0	0	1	0	0	0	0	016	10
For state r1		0	0	0	1	0	0	0	1	017	11
For state r2		0	0	0	1	0	0	1	0	018	12
For state r3		0	0	0	1	0	0	1	1	019	13
For state p1		0	0	0	1	0	1	0	0	020	14
For state p2		0	0	0	1	0	1	0	1	021	15
For state p3		0	0	0	1	0	1	1	0	022	16
For state p4		0	0	0	1	0	1	1	1	023	17
For state p5		0	0	0	1	1	0	0	0	024	18
For state p6		0	0	0	1	1	0	0	1	025	19
For state p7		0	0	0	1	1	0	1	0	026	1A
For state d1		0	0	0	1	1	0	1	1	027	1B
For state d2		0	0	0	1	1	1	0	0	028	1C
For state d3		0	0	0	1	1	1	0	1	029	1D
		0	0	0	1	1	1	1	1	031	1F
Packet Not Allowed	20-2F										
General		0	0	1	0	0	0	0	0	032	20
Unidentifiable packet		0	0	1	0	0	0	0	1	033	21
Call on one way logical channel		0	0	1	0	0	0	1	0	034	22
Packet type on a PVC not valid		0	0	1	0	0	0	1	1	035	23
Packet on unassigned logical channel		0	0	1	0	0	1	0	0	036	24
REJECT not subscribed to		0	0	1	0	0	1	0	1	037	25
Packet too short		0	0	1	0	0	1	1	0	038	26
Packet too long		0	0	1	0	0	1	1	1	039	27
General format identifer not valid		0	0	1	0	1	0	0	0	040	28
Restart with nonzero in bits 1-4, 9-16		0	0	1	0	1	0	0	1	041	29
Packet type not compatible with facility		0	0	1	0	1	0	1	0	042	2A
Unauthorized interrupt confirmation		0	0	1	0	1	0	1	1	043	2B
Unauthorized interrupt		0	0	1	0	1	1	0	0	044	2C
Timer Expired	30-3F										
General		0	0	1	1	0	0	0	0	048	30
For INCOMING CALL		0	0	1	1	0	0	0	1	049	31
For CLEAR INDICATION		0	0	1	1	0	0	1	0	050	32
For RESET INDICATION		0	0	1	1	0	0	1	1	051	33
For RESTART INDICATION		0	0	1	1	0	1	0	0	052	34
Call Setup Problem	40-4F										
General		0	1	0	0	0	0	0	0	064	40
Facility code not allowed		0	1	0	0	0	0	0	1	065	41
Facility parameter not allowed		0	1	0	0	0	0	1	0	066	42
Invalid called address		0	1	0	0	0	0	1	1	067	43
Invalid calling address		0	1	0	0	0	1	0	0	068	44

Logical Link Control Types and Formats

The 5294 can use any one of three different logical link control (LLC) protocols. They are Physical Services Header (PSH) LLC, Qualified LLC (QLLC), or Enhanced LLC (ELLC).

For outgoing calls or PVC, the LLC protocol that will be used is determined by the configuration record (or, when permitted, by the operator at the time a connection is made). For incoming calls the 5294 will use the type LLC indicated in the incoming call packet.

The LLC header immediately follows the packet header. The header length is dependent on the type of LLC used and the header may not always be present. At the LLC level, except for ELLC, a primary station and a secondary station are defined similar to SDLC usage. The 5294 is always a secondary station except for ELLC, which uses a balanced mode protocol. However, even when using ELLC the 5294 will not send any unnumbered commands. The formats for the different LLC types are defined on the following pages.

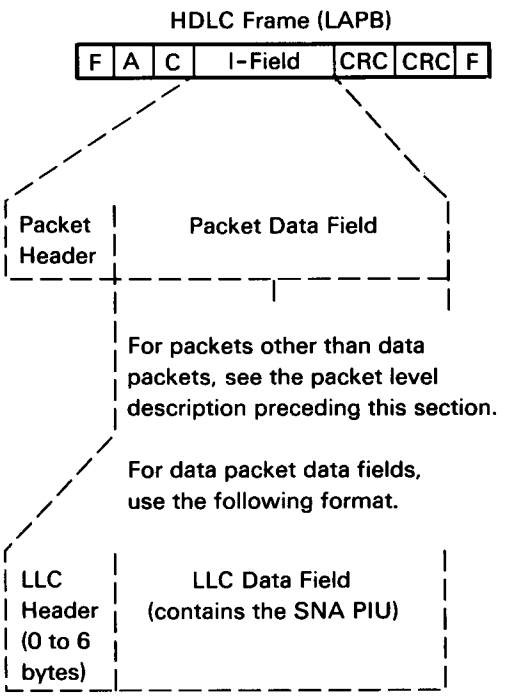

Physical Services Header Format

The physical services header (PSH) is always present when PSH LLC is used and is 2 bytes long.

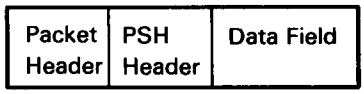

Header Type	Byte 1	Byte 2	Acronym	Data Field Contents
LLC Function Control	11110001	00001000	PSCONT	Not used with commands sent to 5294. It is 1 byte long containing LLC address for a response from the 5294.
	11110001	00000010	PSDISC	None
	11110001	00000100	PSXID	XID data (up to 20 bytes) for command and response
	11110001	00000110	PSTEST	Test data (preceded by 1-byte LLC address for response only)
Data	11110010	Sequence number 00 to FF		SNA PIU (or the last segment of a segmented PIU, when segmenting is used). Bit 5 of byte 1 is off.
Data	11110110	Sequence number 00 to FF		Segment of SNA PIU (except last) when segmenting is used. Bit 5 of byte 1 is on.

Note: All codes not shown are not valid.

Qualified Logical Link Control Format

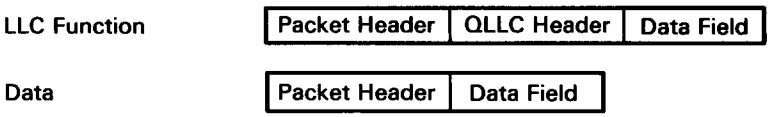

If the Q bit of packet header byte 0 is equal to 1, it indicates a qualified logical link control (QLLC) header follows the packet header. The header length is 2 bytes. The format is shown below.

Header		**Data Field**
Byte 1 **LLC Station Address**	**Byte 2** **Command/Response**	
Always FF for headers received by 5294 (commands) and is the LLC station address for headers sent by 5294 (responses)	Q Set Mode (QSM) Q Exchange ID (QXID) Q Disconnect (QDISC) Q Receive Ready (QRR) Q Unnumbered Acknowledgment (QUA) Q Disconnected Mode (QDM)	None XID Data (up to 20 bytes) Q Test Test data None None None None

If the Q bit is off, no LLC header is present. Data field content is SNA PIU (or segment of SNA PIU when M-bit segmenting is used at the packet level).

Enhanced Logic Link Control Format

The enhanced logic link control (ELLC) header plus the ELLC data field are referred to as a protocol data unit (PDU). The ELLC header is 6 bytes long and is always present when ELLC is used.

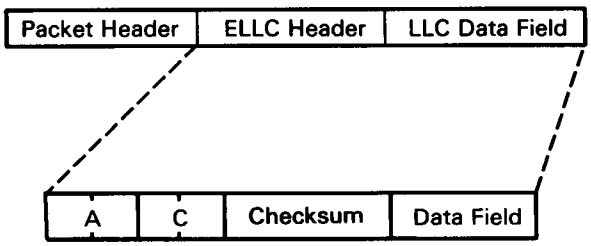

The ELLC header has three fields. The A-field indicates whether the C-field is a command or a response. The C-field contains the command/response. The checksum field contains a checksum for the ELLC PDU.

The A-field of the ELLC header is 2 bytes long.

If the A-field = 0000, the C-field is a command.
If the A-field = 0001, the C-field is a response.

LPDU Commands and Responses

PDU Type[3]	Acronym	Bit Positions 0 1 2	3	4 5	6	7	8 9 10 11 12 13 14	15	CMD	RESP
(I)	LI	LNs				0	LNr	P	X	
(S)	LRR	0 0 0	0	0 0	0	1	LNr	P/F	X	X
	LRNR	0 0 0	0	0 1	0	1	LNr	P/F	X[1]	X[1]
	LREJ	0 0 0	0	1 0	0	1	LNr	P/F	X[1]	X
(U)	LDM	0 0 0	0	1 1	1	1	0 0 0 0 0 0 0	F		X
	LSABME	0 1 1	0	1 1	1	1	0 0 0 0 0 0 0	1	X[1]	
	LDISC	0 1 0	0	0 0	1	1	0 0 0 0 0 0 0	1	X[1]	
	LUA	0 1 1	0	0 0	1	1	0 0 0 0 0 0 0	F		X
	LPDUR	1 0 0	0	0 1	1	1	0 0 0 0 0 0 0	F		X[2]
	LXID	1 0 1	0	1 1	1	1	0 0 0 0 0 0 0	P/F	X[1]	X
	LTEST	1 1 1	0	0 0	1	1	0 0 0 0 0 0 0	P/F	X[1]	X

[1]Not transmitted by the 5294 for this usage.
[2]Not transmitted by the 5294. Discarded without action if received.
[3]U = UPDU, S = SPDU, I = IPDU.

There are three types of protocol data units: the information protocol data unit (IPDU), the supervisory protocol data unit (SPDU), and the unnumbered protocol data unit (UPDU). The PDU type is identified by bits 6 and 7 of the control field as follows:

Bit 6 7 PDU Type

x 0 IPDU, where x means 'don't care'
0 1 SPDU
1 1 UPDU

Control Field for the Information Protocol Data Unit

Control Field Bits	0 1 2 3 4 5 6	7	8 9 10 11 12 13 14	15
Information (IPDU)	LNs	0	LNr	P
LNs = transmitter send sequence number (bit 6 = low-order bit). LNr = transmitter receive sequence number (bit 14 = low-order bit). P = poll bit in command frames.				

The information protocol data unit (IPDU) format is used to transfer information over a data link. The transmitting station increases its LNs count and, if the receiving station receives a valid sequenced frame, the receiving station increases the LNr count.

IPDU Format Definition

Bits 0 through 6 of the C field contain the sequence number of the IPDU. This is the LNs count.

Bit 7 is 0 to indicate an IPDU.

Bit 8 through 14 of the C field contain the sequence number expected in the LNs field of the next IPDU. This is the LNr count.

Bit 15 is the poll bit. It is always 0 for IPDUs transmitted by the 5294.

ELLC Control Field for the Supervisory Protocol Data Unit

The format for the enhanced logical link control (ELLC) control field for the supervisory protocol data unit (SPDU) is shown below.

Control Field Bits	0 1 2	3	4 5	6	7	8 9 10 11 12 13 14	15
Supervisory (SPDU)	0 0 0	0	S S	0	1	LNr	P/F

LNr = transmitter receive sequence number (bit 14 = low-order bit).
P/F = poll (P) bit in command frames or final (F) bit in response frames.
S = supervisory function bit.

The supervisory format is used to acknowledge IPDUs, to request retransmission of IPDUs, and to report a busy condition.

SPDU Format Definition

L Receive Ready (LRR) is a command or a response which indicates that the originating station is ready to receive data and has no data to transmit. Receive ready also acknowledges IPDUs with sequence counts through LNr minus 1 and can be used to request an acknowledgement of IPDU's that have been sent.

L Receive Not Ready (LRNR) is a command or a response (sent by the primary station or by the secondary station) which indicates that the station has a busy condition and cannot receive additional IPDUs. Receive not ready also acknowledges IPDUs with sequence counts through LNr minus 1. This is not sent by the 5294.

L Reject (LREJ) is a command or a response that requests retransmission of IPDUs starting with the IPDU that had an LNs count equal to the LNr count in the LREJ command. This is sent by the 5294 only as a response.

ELLC Control Field for the Unnumbered Protocol Data Unit

The format for the enhanced logical link control (ELLC) control field for the unnumbered protocol data unit (UPDU) is shown below.

Control Field Bits	0 1 2	3	4 5	6	7	8 9 10 11 12 13 14	15
Unnumbered (UPDU)	M M M	0	M M	1	1	0 0 0 0 0 0 0	P/F
M = modifier function bit. P/F = poll (P) bit in command frames or final (F) bit in response frames.							

The unnumbered format is used to perform logical link control functions. The commands and responses for the unnumbered format are:

UPDU Format Definition

L Set Asynchronous Balanced Mode Extended (LSABME) is a command, when received, that places the 5294 in information transfer state (asynchronous balanced mode extended) at the LLC level and sets both LNs and LNr sequence counts to zero. This command is not sent by the 5294.

L Disconnect (LDISC) is a command from a sending station that places the receiving station in disconnected mode. The receiving station lets the primary station know that it has received the command by responding with an unnumbered acknowledgment (LUA) if in the information transfer state or by a responding LDM if in the disconnected mode. No action results at any other level as a result of receiving this command. This command is not sent by the 5294.

L Unnumbered Acknowledgment (LUA) is a positive response to an LDISC or an LSABME command. It indicates that the command has been accepted.

L Test is a command and a response. The sending station transmits a test command that usually has test data in the I-field. The test data (256 bytes maximum) sent with the command is returned in the test response from the receiving station. This is sent by the 5294 only as a response.

L Disconnected Mode (LDM) is a response from the receiving station, which indicates that the station is in disconnected mode.

L Exchange Station Identification (LXID) is used by the sending station as a command to request station identification from the receiving station. The sending station also has the option of giving its own identification. The 5294 sends the LXID only as a response to an LXID command.

A data field is included in the command and response. The format is the same as the format for the SDLC XID.

Synchronous Data Link Control (SDLC) Description

SDLC is a protocol for the management of data transfer over a data communication link. SDLC supplies:

- The definition of primary and secondary station responsibilities
- The definition of the transmission states that affect information transfers
- The design of information grouping for control and checking
- The design of the format for the transfer of information and the control of data

Primary stations are the commanding stations. They have the responsibility of controlling all transmissions to or from any secondary (responding) station on the data link.

Only a station operating as a primary station can begin transmissions, and all transmissions must go to or from the primary station.

A station may be assigned as a primary station for one portion (data link) of a telecommunication network, and as a secondary station for another data link in the same network; however, the work station controller operates only as a secondary station.

Zero-Bit Insertion/Deletion

The only time more than five contiguous 1-bits are permitted on the data link is when a flag is intended.

Because some data needs more than five contiguous 1-bits, the transmitting station inserts a zero after every five contiguous 1-bits. The receiving station removes the inserted zeros. For example, if the primary station has the following bits to be sent:

00 01100111 10001111 10111111 11111111 11--,

zeros would be inserted and the actual transmission would be:

00 01100111 10001111 1001111101 111101111 101--,

and the receiving station would delete the inserted zeros. What would actually go to the receive buffers would be:

00 01100111 10001111 10111111 11111111 11--

Counting of contiguous 1-bits is not concerned with byte or character boundaries. Zero-bit insertion/deletion is done for the address, control, information, and CRC bytes. However, the inserted zeros are not included in the calculation of the CRC bytes.

A characteristic of zero-bit insertion/deletion is that it is fully transparent at all times. Any bit pattern can be sent as data without any special action because zero-bit insertion/deletion is active for everything except flags.

NRZI (Non-return to Zero Inverted)

Data clocking that relies on transitions in the data to stay in sync would have difficulty staying in sync with a long string of zeros or ones. SDLC uses zero-bit insertion/deletion, which ensures that there will never be six contiguous 1-bits on the line. Using the NRZI option ensures that transmitting long strings of zeros will not result when line transitions are not occurring. Therefore, using SDLC with the NRZI option ensures that there can never be more than five bit-times without a transition during data transmission, except for the flag. With the flag included, there can never be more than six bit-times without a transition.

NRZI is done by changing the level of the send data for each 0-bit and maintaining the existing level for each 1-bit.

For example:

Data: . . . 1 1 0 0 0 0 1 1 0 0 . . .
Send data: + + + - + - + + + - + . . .

Data: . . . 1 1 0 0 0 0 1 1 0 0 . . .
Send data: - - - + - + - - - + - . . .

Because zero-bit insertion/deletion ensures that the line can never be all ones and because NRZI changes the state of the line for each zero, the line will have transitions often enough during data transmission for correct synchronization.

SDLC Transmissions

All transmissions using SDLC are carried in a basic unit called a frame. The frame contains all the commands, responses, and information that is being transmitted. Frames can be transmitted one at a time or grouped together and sent in a sequence.

If frames are transmitted one at a time, and if the poll bit is on, a response frame is returned by the receiving station for each frame received. If a sequence of frames is transmitted, the poll bit is set on in the last frame only and the receiving station sends a response frame only after receiving the last frame.

When transmitting sequenced frames, the transmitting station counts and numbers each frame. This count is the Ns count. The station receiving the sequenced frames counts each error-free frame it receives. This count is the Nr count.

The Ns and Nr counters start at 0 and count through 7. When the counter is at 7 and another frame is counted, the counter advances to 0.

See also X.25.

SDLC Frame Format

Leading Pad

This field, although not a part of the SDLC frame, is shown here because of its relationship with the frame. When the *leading pad required* bit is set in the configuration record, the SDLC adapter inserts a synchronization byte into the data stream before the starting flag sequence. This byte is used to obtain or maintain synchronization of the modem clock following a line turnaround.

SDLC Frame Format

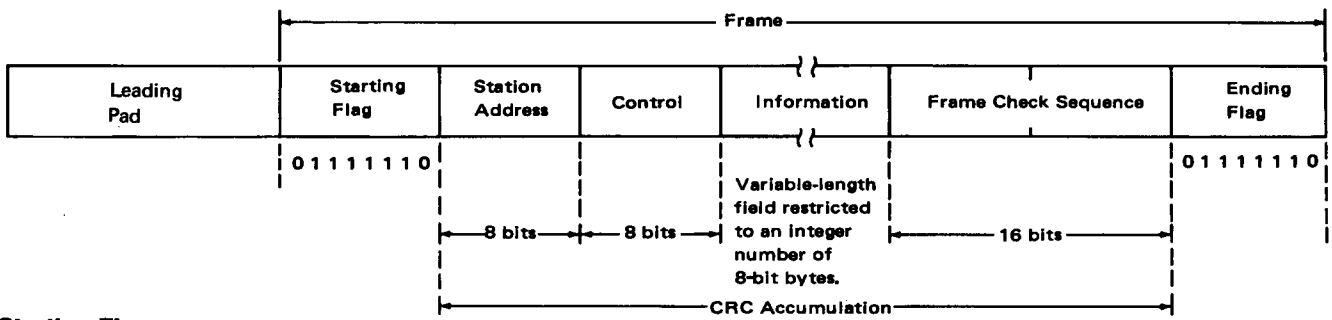

Starting Flag

The starting flag starts the frame. The starting flag also causes transmission error checking to start with the first non-flag character following. It is made up of 8 bits with a configuration of hexadecimal 7E (01111110). This flag serves as a reference to show the position of the address and control fields.

Station Address

This 8-bit field always identifies the work station controller whether it is transmitting to or receiving from the primary station. The work station controller, in addition to recognizing its own address, can recognize the broadcast address of 11111111. A valid address must be recognized before a frame can be received.

Control Field

The control field carries the commands and responses necessary to control a data link. It consists of 8 bits. (See *SDLC Command and Responses* on the next page.)

Information Field

This field is not present in all frames. The information (I) field may contain any valid EBCDIC character, but it is restricted to an integer number of 8-bit bytes and by the buffering limits of the stations communicating with each other. The information field contains the data to be moved, via the data link, from place to place in the network. The data contained in this field is checked for validity by the frame check sequence field. The information field can contain up to 256 bytes of information, plus 5 bytes of SNA header information, for a total length of 261 bytes for the work station controller.

Frame Check Sequence

This field contains 16 bits. The configuration of these bits rely on a mathematical calculation of the digital value of all the bits in the station address field, the control field, and the information field. The transmitter performs the calculation and sends the binary complement of the result, in the frame check sequence field, to the receiver. The receiver calculates the value for the received frame. If the transmission is error free, the receiving station should show a remainder of hexadecimal F0B8. This type of checking is known to as cyclic redundancy checking (CRC).

Note: Inserted zeros are not included in the CRC accumulation.

Ending Flag

The ending flag ends the frame and transmission error checking. It is made up of 8 bits with a configuration of hexadecimal 7E (01111110). When more than one frame is transmitted, the ending flag of one frame can also be the starting flag of the next frame.

SDLC Commands and Responses Supported by the IBM 5294 Control Unit (Work Station Controller)

The commands and responses in the SDLC frame are contained in the control field. The following figures show the commands and responses supported by the work station controller and any commands not shown are not supported and will cause the work station controller to issue a *frame reject* response.

Format[1]	Sent Last ↓	Binary Configuration	Sent First ↓	Acronym	Command	Response	I-field Prohibited	Resets Nr and Ns	Confirms Frames Through Nr-1	Definitions
U	100	P	0011	SNRM	X		X	X		Set normal response mode; transmit on command.
U	000	F	1111	DM		X	X			This station is offline. DM is the same as ROL.
U	010	P	0011	DISC	X		X			Enter normal disconnect mode (go on hook if switched).
U[2]	011	F	0011	UA[2]		X	X			Acknowledge U commands.
U[2]	100	F	0111	FRMR[2]		X				Invalid command received; must receive SNRM or DISC to reset FRMR condition.
U	101	P/F	1111	XID	X	X				Solicits station ID.
U	111	P/F	0011	TEST	X	X				Test a link. The I-field may contain test data.
S	Nr	P/F	0001	RR	X	X	X		X	Ready to receive.
S	Nr	P/F	0101	RNR	X	X	X		X	5294 Control Unit has no buffers available.
I	Nr	P/F	Ns O	I	X	X			X	Sequenced I-frame.

[1]U = unnumbered, S = supervisory, I = information.

[2]The ISO/ANSI terms for the U commands and responses are shown. The U (unnumbered) format was formerly referred to as the NS (nonsequenced) format. The acronyms were formerly as follows:

New	Old
UA	NSA
FRMR	CMDR
DM	ROL

SDLC Commands and Responses in Hexadecimal Notation

Unnumbered Commands

Commands	**P**	**P**
SNRM	93	83
DISC	53	43
XID	BF	AF
TEST	F3	E3

Unnumbered Responses

Commands	**F**	**F**
UA	73	63
DM	1F	0F
FRMR	97	87
XID	BF	AF
TEST	F3	E3

Information Commands/Responses (See the Table for X and Y)

I	XY

Supervisory Commands/Responses (See the Table for X)

RR	X1
RNR	X5
REJ	X9

Hexadecimal Digit for X

Nr=	P/F	$\overline{P/F}$
0	1	0
1	3	2
2	5	4
3	7	6
4	9	8
5	B	A
6	D	C
7	F	E

Hexadecimal Digit for Y

Ns=	Hex
0	0
1	2
2	4
3	6
4	8
5	A
6	C
7	E

Control Field Format

The control field contains 8 bits with the following bit assignments.

Bits 0 through 2

Bits 0 through 2 of the information transfer and supervisory formats contain the sequence number of the next expected frame. This is the Nr count.

Bit 3

Bit 3 of all formats is the poll/final (P/F) bit. The poll bit, sent by the primary station, permits the transmission of data from the secondary station. The secondary station sends a final bit when it has completed the transmission of data.

Bits 4 through 6

Bits 4 through 6 of the information transfer format contain the sequence number of the frames that have been sent. This is the Ns count. Bit 6, in the supervisory and unnumbered formats, is also used with bit 7 for format identification.

Bit 7

Bit 7 in the information format (bits 6 and 7 in the supervisory and unnumbered formats) identifies the three control field formats: supervisory, information transfer, and unnumbered.

Bits that are not used, as stated above for the format, are used to encode the commands and responses necessary to control a data link. The commands and responses are described later.

Control Field for the Supervisory Format

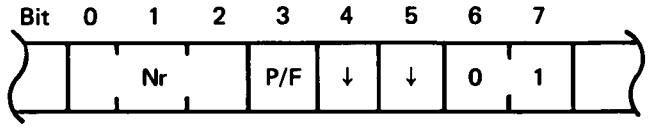

Receive Ready (RR)	0	0
Receive Not Ready (RNR)	0	1

The supervisory format is used to acknowledge information frames to request retransmission of information frames, and to report a busy condition. The commands and responses of the supervisory format are:

- Receive Ready (RR): This is a command or a response (sent by the primary station or by the secondary station), which indicates that the originating station is ready to receive data and has no data to transmit. Receive ready also acknowledges information frames with sequence counts through Nr minus 1.
- Receive Not Ready (RNR): This is a command or a response (sent by the primary station or by the secondary station), which indicates that the station has a busy condition and cannot receive additional information frames. Receive not ready also acknowledges information frames with sequence counts through Nr minus 1.

Control Field for the Information Transfer Format

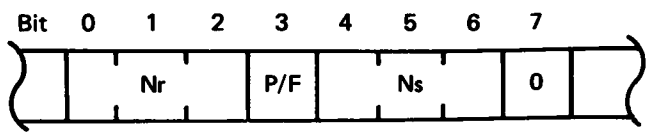

The information transfer format is used to transfer information over a data link. The transmitting station increases its Ns count and, if the receiving station receives a valid sequenced frame, the receiving station increases its Nr count.

Control Field for the Unnumbered Format

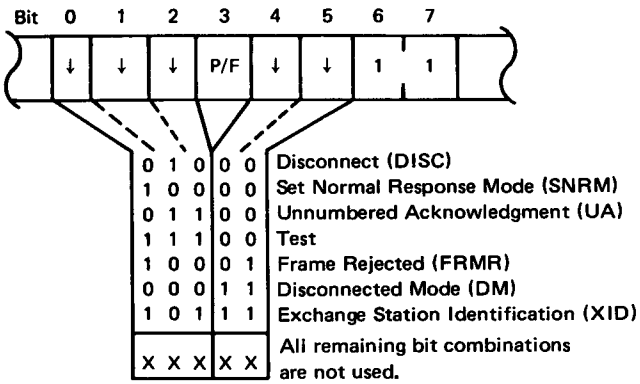

The unnumbered format is used to perform data link control functions. The commands and responses for the unnumbered format are:

- Disconnect (DISC): This is a command from the primary station that places the secondary station in the normal disconnect mode (NDM). The secondary station lets the primary station know that it has received the command by responding with an UA (unnumbered acknowledgment) if in the normal response mode, and a DM (disconnected mode) if in the disconnected mode. In either case, the work station controller goes on hook if attached to a switched line modem/DCE that has the auto-answer function.

- Set Normal Response Mode (SNRM): This is a command from the primary station that places the secondary station in normal response mode (NRM). The response to SNRM is UA (unnumbered acknowledgment). When an SNRM command is received, the sequence counts (Ns and Nr) are reset to zero at both stations.

- Unnumbered Acknowledgment (UA): This is a positive response to a DISC or SNRM command. It indicates that the command has been accepted.

- Test: This is a command and a response. The primary station transmits a test command that usually has test data in the I-field. The test data (256 bytes maximum) sent with the command is returned in the test response from the secondary station. However, if the amount of test data is more than the amount of data that can be put into the received buffer, or if no test data is sent, only the control field is returned in the response.

- Frame Reject (FRMR): This is a response to commands received by the secondary station that are not valid and are not supported. A FRMR response includes an information field that gives the reason for rejecting the command.

- Disconnected Mode (DM): This is a response from the secondary station, which indicates that the station is in normal disconnect mode (NDM).

- Exchange Station Identification (XID): The primary station uses XID as a command to request station identification from the secondary station. The primary station also has the option of giving its own identification. The secondary station sends XID only in response to an XID command. If the ID information received is more than 261 bytes, no ID data will be returned in the XID response. An I-field is included in the command and response. The format is shown on the next page.

The contents of the I-field for the XID response are as follows:

Byte	Bits	Code	Description
0	0-3 4-7	0001 0001	Variable format PU type 1 (FID3)
1	0-7	Hex 14	ID information field length
2-5	0-11 12-31	Hex 45 Hex 000XX	Block number Specific ID (XX = the SDLC station address)
6-7	0-15	Hex 0000	Reserved
8		Hex 00	Configuration flags; always 00
			Configuration Code for Secondary Station
9	 0 1 2-3 4-7	 1 0 11 0000	PU characteristics (see Note 1) PU can receive FM RUs from SSCP Reserved No segments permitted Reserved
10-11	0-15	Hex 0105	Maximum length for received I-field (261 bytes)
12	 0-3 4-7	 0000 0000	SDLC command profiles Reserved SNA set (see Note 2)
13	0-7	Hex 00	Reserved
14	0-7	Hex 00	Reserved
15	0-7	Hex 00	Reserved
16	0-7	Hex 07	This is the maximum number of consecutive I-frames or unnumbered frames that the work station controller can accept before an acknowledge
17-19		Hex 000000	Reserved

Notes:

1. This field describes the restrictions, if any, on the physical unit the user is using.
2. Bits 4 through 7 of byte 12 contain the SDLC function profile. Value hex 0 defines the SNA link set. The SNA link set is:

Commands	Responses
I-frames	I-frames
RR	RR
RNR	RNR
TEST	TEST
XID	XID
SNRM	UA
DISC	DM
	FRMR

SDLC Response Modes

There are two response modes for a secondary station using SDLC protocol: NRM (normal response mode) and NDM (normal disconnect mode).

In normal response mode, the secondary station can transmit if it has received a frame with the poll bit on. Single or sequential frames can be transmitted. The last frame transmitted has the final bit on. Once a frame is transmitted with the final bit on, the secondary station cannot transmit again until it receives another frame with the poll bit on.

In normal disconnect mode, the secondary station normally responds with DM (disconnected mode) unless it receives an SNRM, TEST, or XID command.

SDLC Transmission States

There are three transmission states for an SDLC data link: active, idle, and transient. Only one of these states can be present at any one time.

Active State

When the data link is in the active state, a station is transmitting or receiving data. Flags are used to begin or maintain the active state. Once the secondary station is in the active state, it must remain active until it sends a frame with the final bit.

Idle State

In the idle state, the data link is operational but no transmissions are being made. When a station does not have the priority to transmit, that station goes back to the idle state. Also, when 15 or more contiguous 1-bits are detected, the data link goes back to the idle state.

Transient State

When the data link is in the transient state, a station is preparing to transmit. This is called turnaround delay. The delay starts when a station sends the 'request-to-send' signal and ends when the modem sends the 'clear-to-send' signal.

Disconnect State (Switched Lines Only)

In the disconnect state, when the data link is not operative by specific intent of the primary station, no transmissions are possible. The primary station does not monitor the data link for incoming transmissions (work station controller is on hook).

For more information on SDLC, see *IBM Synchronous Data Link Control General Information* or the *IBM System Network Architecture Handbook, Customer Service Division.*

Systems Network Architecture (SNA) Support

The SNA support on the work station controller is:

- Transmission services (TS) profile 7
- Function manager (FM) profile 7
- Display logical unit (LU) type 7
- Printer logical unit (LU) type 4

SNA Commands and Responses Supported by the Work Station Controller

- ACTLU-Receive only
- BIND-Receive only (see *BIND Request Contents*)
- CANCEL-Send and receive
- DACTLU-Receive only
- LUSTAT-Send and receive
- REQMS-Receive only
- RECFMS-Send only
- RSHUTD-Send only
- SIGNAL-Send and receive
- UNBIND-Receive only
- REQTEST-Send only

BIND Request Contents

If the BIND command that the host system sends to the work station controller is supported (a negotiable BIND), the work station controller sends the parameters that it wants the host system to use in the session. The work station controller does not check the length of a BIND request. It only checks bytes 0, 1, 8, 9, 10 and 25.

The meanings of the bytes checked by the work station controller are:

Byte	Bits	Code	Description
0	0-7	Hex 31	Request code.
1	0-7	Must be hex 00 or a negative response is returned	Format.
8	0 1 2-7	0 = 1 stage pacing 1 = 2 stage pacing 0	Stage of pacing from work station controller to host. Reserved. Pacing count to be used when the work station controller is sending to the host.
9	0-1 2-7	00	Reserved. Pacing count to be used when the host is sending to the work station controller (see Notes 1 and 2).
10	0-7	Must be ≥ hex 85 or a negative response is returned	Maximum RU (request/response unit) size for RUs sent from the work station controller to the host.
25	0-6 7	0000000 0 = No EC download support 1 = EC download supported	Reserved. Specifies EC download support by the host system. All systems that support the work station controller will have bit 7 on.

Notes:
1. If the BIND request is for a printer and the value in byte 9 is either 1 or 2, the work station controller uses the count supplied in the BIND request. If it is any other value, the work station controller uses a pacing count of 3.
2. If the BIND request is for a display station and bits 2 through 7 of byte 9 are not 0, the work station controller sends a negative response (indicating that the session parameters are not valid) because the display LUs do not permit pacing of received RUs.

When the controller receives the BIND request from the host, it issues a BIND response. The host should check the BIND response to verify that it is compatible with the request.

SNA Information Field

The SNA information field contains the RUs (request/response units), status, controls, and SNA responses and commands. The information field consists of 2 bytes of TH, followed by 3 bytes of RH, and then up to 256 bytes of RU. The maximum length of the information field PIU (path information unit) is 261 bytes. The maximum BLU (basic link unit) is 267 bytes. A PIU with more than 261 bytes causes an SDLC buffer overflow, a frame reject to be returned, and a 0054 error to be logged. A PIU (path information unit) of less than 5 bytes is discarded by SNA with no negative response returned.

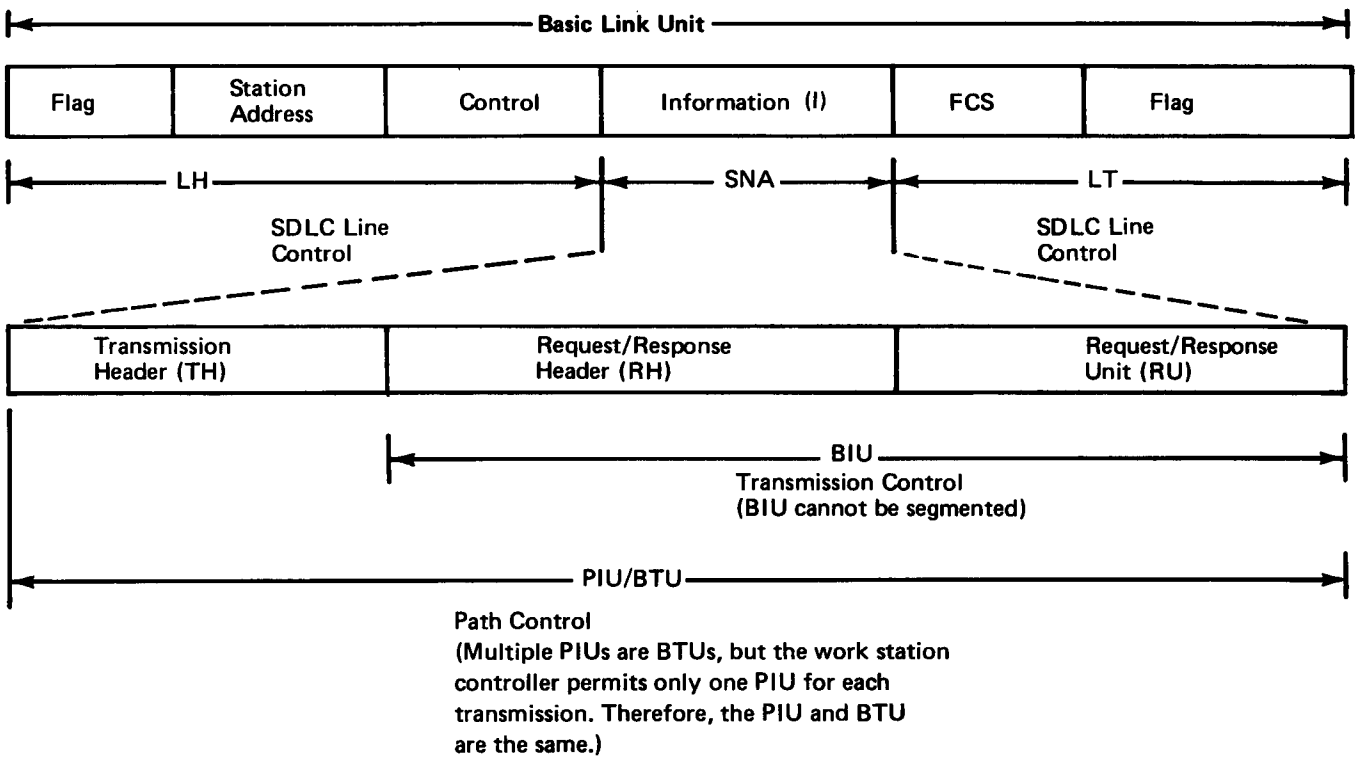

Transmission Header

Byte	Bits	Code	Description
0	0-3	0011	**Format identifier.** FID 3 for work station controller.
	4-5	11	Mapping field. Always 11 for work station controller (no segmenting).
	6	0	Reserved.
	7	0	Normal flow indicator.
		1	Expedited flow indicator.
1			LSID (see note).
	0-1	00	SS to PU session.
		01	SS to LU session.
		11	LU to LU session.
		10	Not valid.
	2-7		Local station address (also known as unit address).
Note: For the work station controller, an SS to PU session has an LSID of 00. An LU to LU session with an attached work station, which has a unit address of 02, has an LSID of hex C2.			

Request Header/Response Header

Request Header

Byte	Bits	Code	Description
0	0	0	Request indicator
	1-2		Request unit type
		00	Function manager data
		01	Reserved
		10	Data flow control
		11	Session control
	3	0	Reserved
	4		Format indicator
		1	Field formatted RU
		0	Character coded RU
	5	1	Sense data is included in the first 4 bytes of the request unit
	6-7		Chain control
		00	Middle in chain
		01	Last in chain
		10	First in chain
		11	Only in chain
1	0	See Note.	Definite response indicator
	1-2	00	Reserved
	3	See Note.	Exception response indicator
	4-5	00	Reserved
	6	1	Queued response indicator
	7	1	Pacing indicator
2	0	1	Start bracket
	1	1	End bracket
	2	1	Change direction
	3	0	Reserved
	4		Code select indicator
		0	Primary code
		1	Alternate code
	5-7	000	Reserved

Note: Byte 1 coding for bits.

0 and 3		Meaning
0	0	RQN, No response needed
0	1	Not valid
1	0	RQD, Request definite response
1	1	RQE, Request exception response

Response Header

Byte	Bits	Code	Description
0	0	1	Response indicator
	1-2		Request unit type
		00	Function manager data
		01	Reserved
		10	Data flow control
		11	Session control
	3	0	Reserved
	4		Format indicator used to indicate an SNA formatted RU
		1	Field formatted RU
		0	Character code RU
	5	1	Sense data is included in the first 4 bytes of the response unit
	6-7		Chain control
		11	Only in chain (always 11 for a response)
1	0	1	Definite response (always a 1)
	1-2	00	Reserved
	3	1	Negative response (bit 0 must also be a 1)
	4-5	00	Reserved
	6	1	Queued response indicator
	7	1	Pacing indicator
2	0-7	000000	Reserved

SNA/SDLC Session Flow

There are three types of SNA sessions:

SS to PU, SS to LU, and LU to LU.

The host system to controller commands are used in the SS to PU sessions; the host system to logical unit commands are used in the SS to LU sessions; and the host system application program to logical unit commands are used in LU to LU sessions. The TH and RH determine the type of session and the RU type for the RU data flow.

The following figure shows the exchange of commands and responses normally used to establish a session between the host system and the work station controller. The XID exchange is not needed to establish a session.

For more information on SNA, see the *IBM System Network Architecture Handbook, Customer Service Division.*

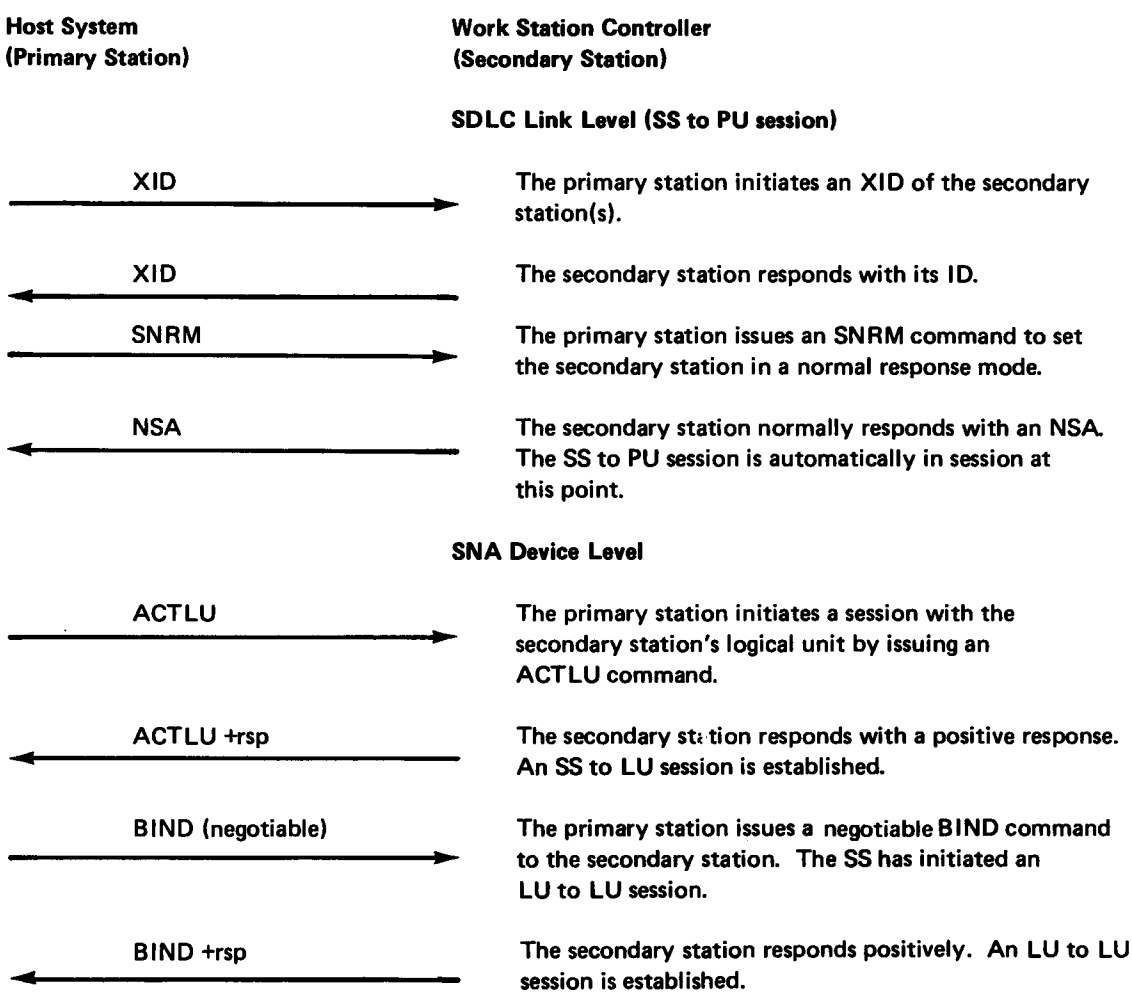

X.21 Switched Communication Protocol

The X.21 switched communication protocol is used in addition to SDLC when communicating over public switched data networks through a DCE that used the CCITT X.24/X.27 (X.21 native) interface.

The X.21 protocol is used to transfer information between the 5294 Control Unit and the network for call establishment, call clearing, and the selection of certain network options.

The protocol uses transmitted and received data in conjunction with the state of the Control (C) and Indicate (I) lines of the interface. Data transfer between the DTE and the DCE (except when in data transfer state) is in International Alphabet 5 (IA5), which uses 7 bits plus a parity bit and maintains odd parity. A table listing the most commonly used characters and the corresponding hexadecimal value is provided in Figure 3-1.

Any 7-bit code contained in a DCE provided information field (not Call Progress) is discarded (including both control code and data code characters).

The following control codes are recognized by the 5294 Control Unit as having the function/definition listed when received in the proper sequence; otherwise, they are treated as data or discarded and may generate an error.

Character	IA5 Code	Parity	Hex Code (See Note)
NUL	0/0	P	00
BEL	0/7	P	07
SI (shift in)	0/15	P	8F
SYN	1/6	P	16
*	2/10	P	2A
,	2/11	P	AB
-	2/12	P	2C
.	2/13	P	AD
/	2/14	P	AE
0	2/15	P	2F
1	3/0	P	B0
2	3/1	P	31
3	3/2	P	32
4	3/3	P	B3
5	3/4	P	34
6	3/5	P	B5
7	3/6	P	B6
8	3/7	P	37
9	3/8	P	38
:	3/9	P	B9
	3/10	P	BA

Note: The hexadecimal value includes correct parity.

Figure 3-1. IA5 Alphabet (Partial Listing)

Control Codes Received

Code	Definition
BEL	Indicates an incoming call when preceded by a minimum of 2 SYN characters (SYN SYN) and the 5294 is in State 1.
SYN	A character that precedes all transmissions and may be embedded within transmissions to maintain synchronization.
SI	Shift In. Used in Japanese network only. Follows SYN SYN and precedes Call Progress signals or DCE provided information.
+	An ending delimiter that indicates end-of-transmission (EOT).
,	A field separator used to separate fields in Call Progress signals or DCE provided information.
/	Indicates the start when a DCE provided change information. Must be preceded by SYN SYN, and the information must be followed by a +.
*	Indicates the start when a DCE provided calling and called line identification. Must be preceded by SYN SYN, and the information must be followed by a +.

Control Codes Sent

Code	Definition
SYN	A character that precedes all transmissions and may be embedded within transmissions to maintain synchronization.
NUL	A character used for fill purposes. The NUL character may be inserted into a data stream without affecting the information content. It is used by the 5294 to replace any operator-entered character that does not have an equivalent in the IA5 alphabet.
.	Indicates the start of an abbreviated address selection sequence. Must be preceded by SYN SYN, and the address must be followed by a +.
,	Used to separate Facility Request signals within a facility request block that contains two or more Facility Request signals, or used to separate Facility Registration/Cancellation signals within a facility registration/cancellation block that contains two or more Facility Registration/Cancellation signals.
/	Used to separate fields (request code, indicator, parameter, or address) within a Facility Registration/Cancellation signal.
-	Terminating delimiter of facility request or facility registration/cancellation blocks. Must be followed by a +.
+	Ending delimiter used to indicate the end of transmission (EOT). Used for all transmissions.
nnn	If preceded by SYN SYN and terminated by a +, the sequence nnn...n is an address selection sequence. If preceded by SYN SYN and terminated by a - then a +, the sequence nnn...n is a facility block.

Since there are only four electrical signal lines (two from the DTE to the DCE and two from the DCE to the DTE), the meaning of the signals is dependent upon the previous state. A description of the X.21 interface states follows.

Note: Communication over a public switched data network is possible using SDLC only when connecting to the network through a DCE using the X.21 bis interface via the EIA feature; however, only a limited set of functions is available. Also, this option may not be available for all networks. When allowed by the network, operation between a DTE using X.21 bis on one end and a DTE using X.21 (X.24/X.27) on the other end is possible.

X.21 Interface States

In the CCITT recommendation X.21, the condition of the interchange circuits determines what is happening at the interface. During a data communication operation, the DTE uses the transmit (T) and control (C) interchange circuits to signal the DCE what action to take. The DCE uses the receive (R) and indication (I) interchange circuits to signal the DTE what action to take.

Figure 3-2 lists the interface states that are defined by recommendation X.21.

State Number	State Name	DTE Circuits		DCE Circuits		DTE Transition to State No.	DCE Transition to State No.	Time-Limit / Time-Out Transition		
		T	C	R	I			To State No.	Time-Limit/ Time-Out No.	Terminated by State No.
1	Ready	1	Off	1	Off	2,13S,14,24	8,13R,18	1	T7	8
2	Call request	0	On	1	Off	---	3,15	1	T1	3
3	Proceed to select	0	On	+	Off	4,15	---	19	T11,T12	4,5
4	Selection signal	IA5	On	+	Off	5	---	19	T13	EOS
5	DTE waiting	1	On	+	Off	---	6A,11,12	16	T2	7,10,12,19
6A	DCE waiting	1	On	SYN	Off	---	7,10,11,12	--	---	---
6B	DCE waiting	1	On	SYN	Off	---	10bis,11,12	--	---	---
7	Call progress signal	1	On	IA5	Off	---	6A,10,11,12	16	T3A,T3B	7,10,12,19
8	Incoming call	1	Off	BEL	Off	15,9	---	1	T14A,T14B	9,15
9	Call accepted	1	On	BEL	Off	---	6B,11,12	16	T4	10bis,12,19
10	DCE provided information	1	On	IA5	Off	---	6A,11,12	--	---	---
10 bis	DCE provided information	1	On	IA5	Off	---	6B,11,12	--	---	---
11	Connection in progress	1	On	1	Off	---	12	--	---	---
12	Ready for data	1	On	1	On	---	13	--	---	---
13	Data transfer	D	On	D	On	13R	13S,DCE not ready	--	---	---
13R	Receive data	1	Off	D	On	13	1	--	---	---
13S	Send data	D	On	1	Off	7	13	--	---	---
14	DTE controlled not ready, DCE ready	01	Off	1	Off	1,24	23	--	---	---
15	Call collision	0	On	BEL	Off	---	3	--	---	---
16	DTE clear request	0	Off	X (Note 1)	X	---	17	18	T5	21
17	DCE clear confirmation	0	Off	0	Off	---	21	--	---	---
18	DTE ready									
	DCE not ready	1	Off	0	Off	22	1	--	---	---
	DCE not ready	D	On	0	Off	---	1,13,13S	--	---	---
19	DCE clear indication	X (Note 1)	X	0	Off	20	---	24	T15	20
20	DTE clear confirmation	0	Off	0	Off		21	18	T6	21
21	DCE ready	0	Off	1	Off	1	---	24	T16	1
22	DTE uncontrolled not ready, DCE not ready	0	Off	0	Off	18	24	--	---	---
23	DTE controlled not ready, DCE not ready	01	Off	0	Off	18,22	14	--	---	---
24	DTE uncontrolled not ready, DCE ready	0	Off	1	Off	1	22	--	---	---
Any State (Note 1)	---	X	X	X	X	16	19	--	---	---

Notes:
1. 'DCE clear indication' (state 19) or 'DTE clear request' (state 16) may be entered from any state except 'ready' (state 1).
2. Other transitions are not considered valid.

Figure 3-2. X.21 Interface State Transitions and Applicable Timeouts

Interface State Diagrams

Recommendation X.21 defines those transitions between interface states that are allowed by all telecommunications administrations. The recognized state transitions for each of the four phases of a data communication operation are shown by means of state diagrams. Figure 3-3 shows the definitions for the symbols that are used in the state diagrams. Figure 3-4 shows the states used for nonswitched operation (X.21 nonswitched public data network or X.25 packet switched network). Figures 3-5, 3-6, and 3-7 show the states used for X.21 circuit-switched public data network operation.

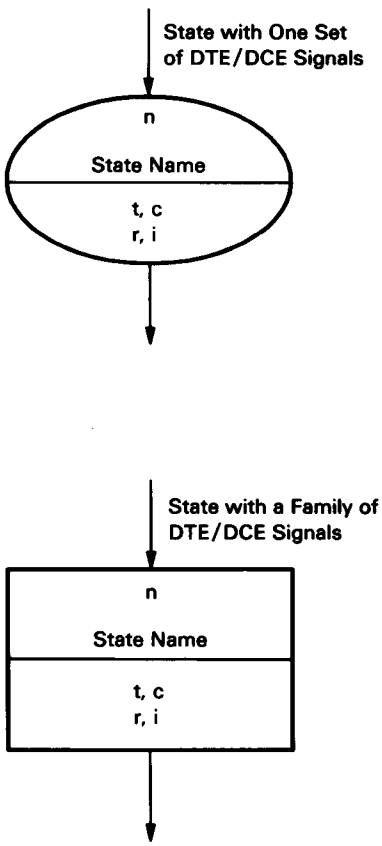

n	= State number
t	= Signal on T circuit
c	= Signal on C circuit
r	= Signal on R circuit
i	= Signal on I circuit
T	= Transmit interchange circuit
C	= Control interchange circuit
R	= Receive interchange circuit
I	= Indication interchange circuit
D	= DTE or DCE data signals
0	= Steady binary 0 condition
1	= Steady binary 1 condition
01	= Alternate binary 0 and binary 1
X	= Any value
Off	= Continuous Off (binary 1)
On	= Continuous On (binary 0)
IA5	= Characters from International Alphabet Number 5 (CCITT Recommendation V.3)
BEL	= IA5 character, 0/7
SYN	= IA5 character, 1/6
+	= IA5 character, 2/11
|	= Transition between states

Figure 3-3. Definitions for Interface State Diagrams

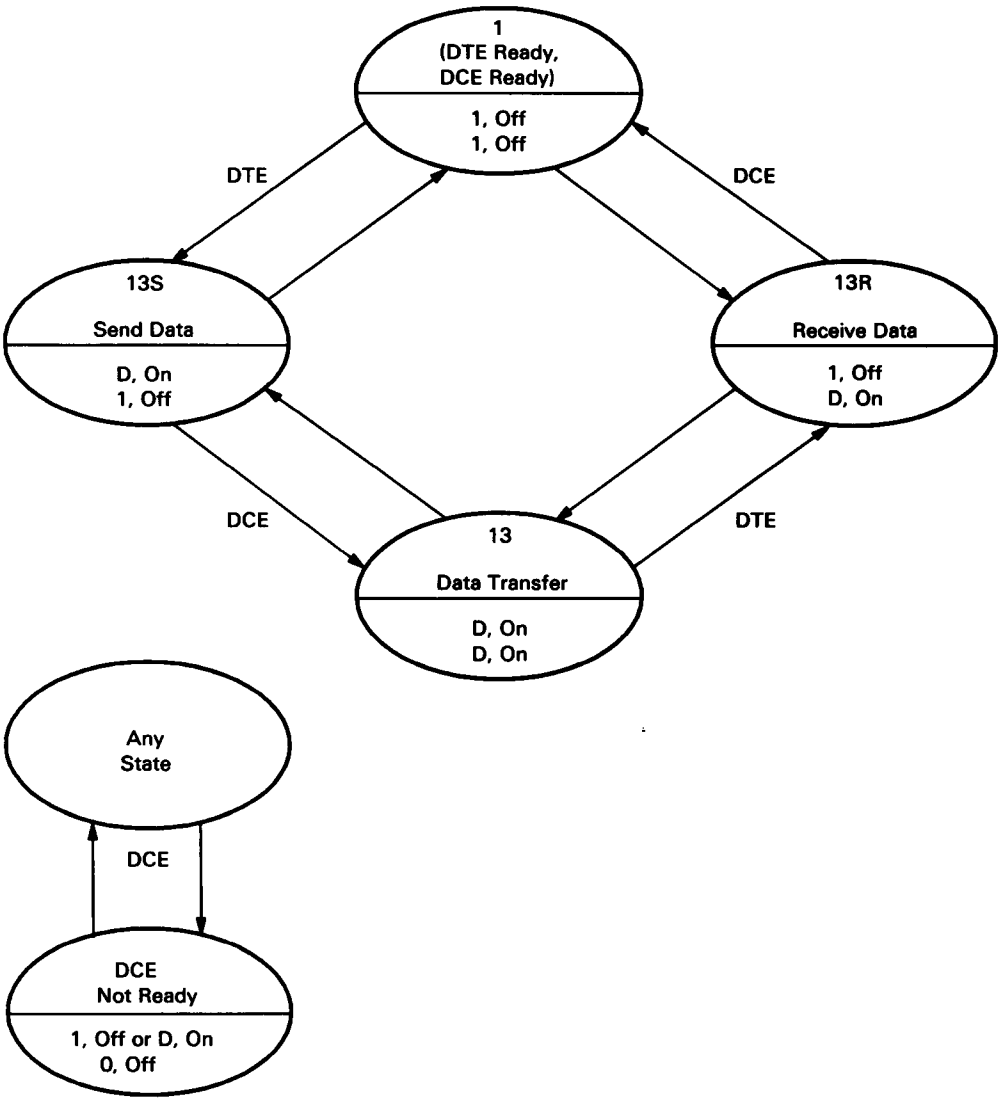

Figure 3-4. Data-Transfer Phase Interface State Diagram (X.21 nonswitched public data network or X.25 packet switched network operation with X.21 electrical (X.24/X.27) interface)

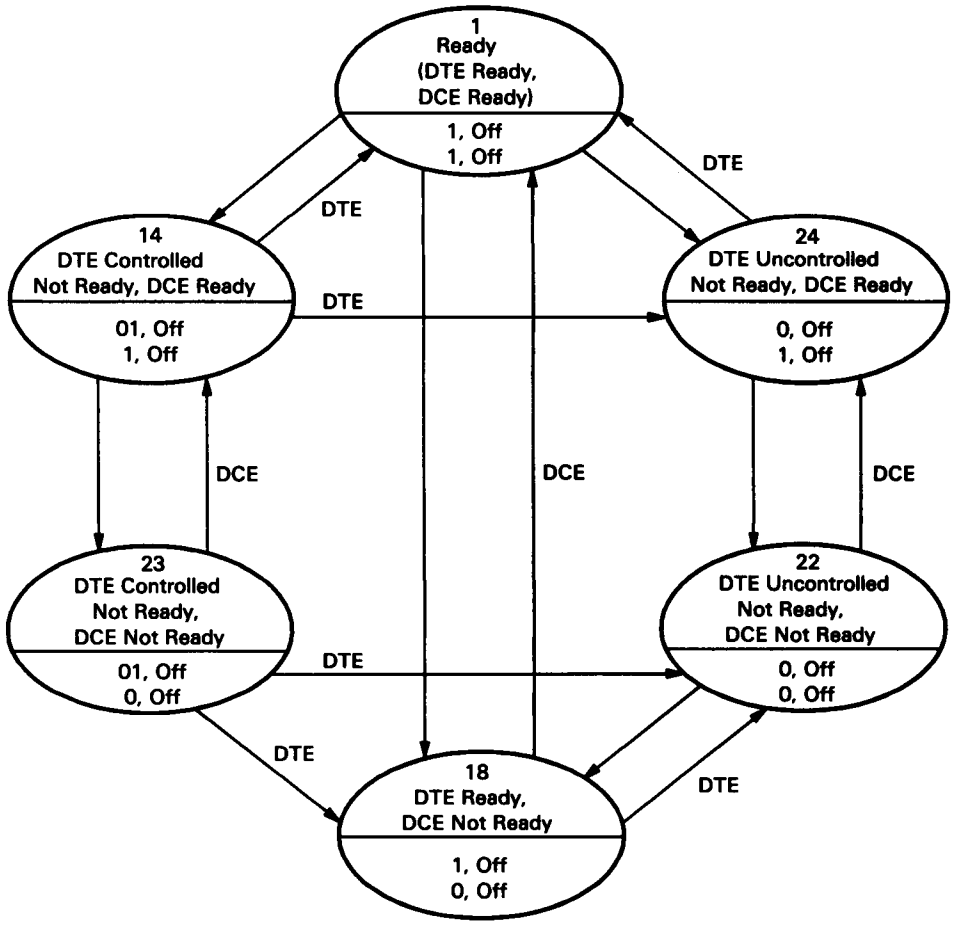

Note: The DCE and DTE (5294) must signal each state for at least 24 bit-times or until the DCE or DTE indicates that the state has been recognized by changing states, whichever is less. The DTE (5294) must not change state as a result of the DCE changing state until the DCE-signaled state has existed for at least 16 bit-times.

Figure 3-5. Quiescent Phase Interface State Diagram (circuit switched operation)

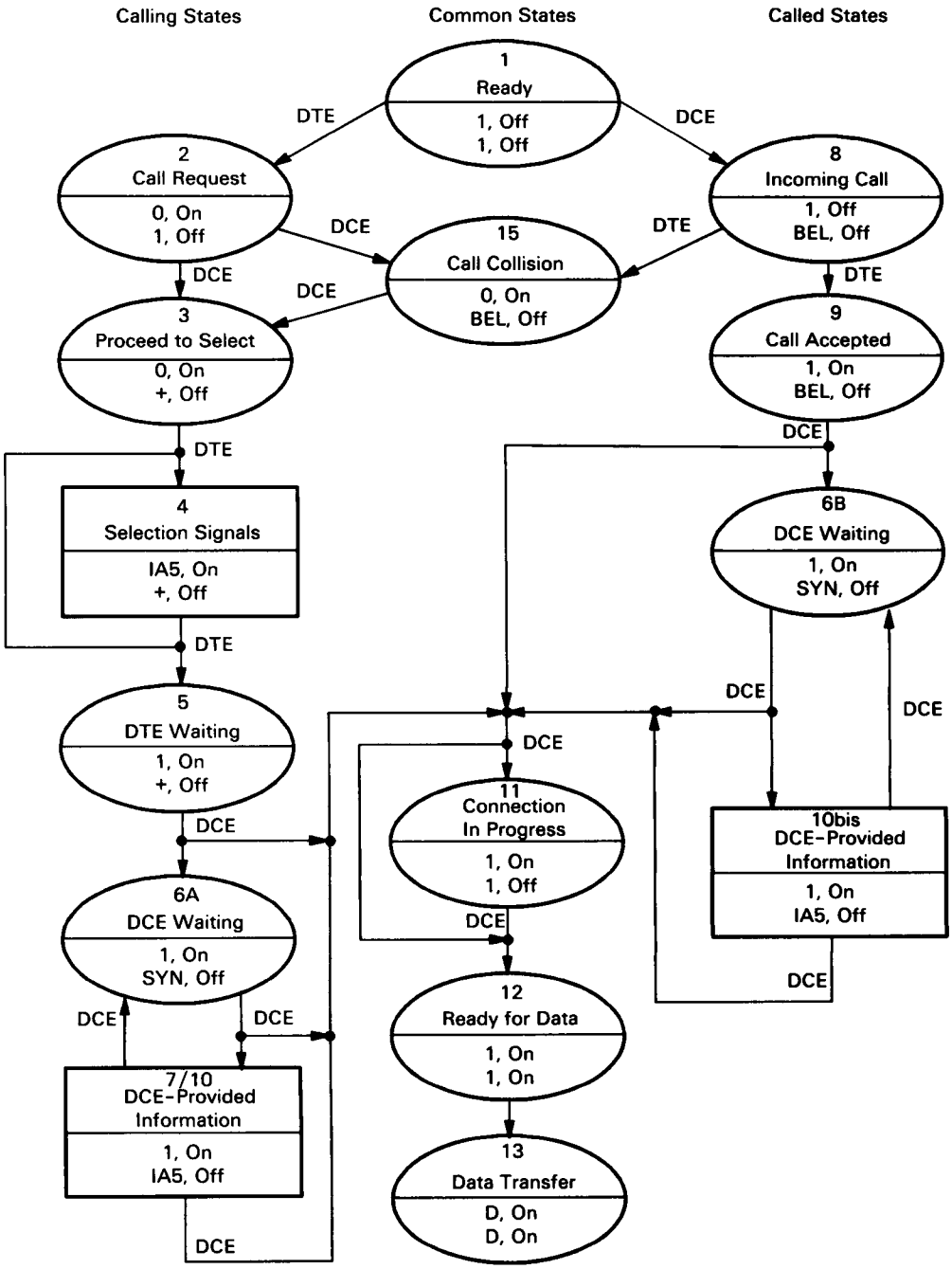

Figure 3-6. Call Establishment Phase and Data Transfer Phase Interface State Diagram (circuit-switched operation)

Switched Network Calling and Answering Sequences

The following tables show the sequence of states, pictured in the state diagrams on the preceding pages, that are used for calling and answering on an X.21 switched network. The condition of the transmit data, receive data, control, and indicate lines for the X.24/X.27 (XLCA) interface between the 5294 Control Unit and the DCE is also shown.

The sequence shown is for normal operation. Most states have time-outs for error recovery. Figure 3-2 shows the time-outs applicable to each state and the state entered if the time-out expires without the expected state transition.

Switched Network Calling Sequence

State	Description	Transmit	Control	Receive	Indicate
1	The 5294 Control Unit and the DCE are ready for transfer	1	Off	1	Off
2	The 5294 Control Unit asks the DCE to place a call	0	On	1	Off
3	The DCE responds with a Proceed to Select signal	0	On	SYN SYN +...	Off
4	The 5294 Control Unit responds with selection signals. This state is bypassed for direct call.	SYN SYN selection signals +	On	+...	Off
5	DTE waiting	1	On	+...	Off
6A	DCE waiting. This state may be bypassed for some calls.	1	On	SYN...	Off
7-10	The DCE responds with a Call Progress signal. The DCE is placing a call to a remote station (optional state).	1	On	SYN SYN Call Progress +	Off
11	The DCE signals that the connection has started (optional state).	1	On	1	Off
12	The connection to the remote station is complete (ready for data).	1	On	1	On
13	The data transfer can now start. Data transfer is performed using SNA/SDLC protocols in half-duplex mode. SDLC operation is the same as SDLC switched operation after a call is established.	Data	On	Data	On

Switched Network Answering Sequence

State	Description	Transmit	Control	Receive	Indicate
1	The 5294 Control Unit and the DCE are ready for transfer	1	Off	1	Off
8	The DCE indicates an incoming call.	1	Off	SYN SYN BEL...	Off
9	The 5294 Control Unit accepts the incoming call.	1	On	BEL...	Off
6B	The DCE waits.	1	On	SYN SYN SYN...	Off
11	The DCE signals that the connection has started. This state may be bypassed.	1	On	1	Off
12	The connection to the host system is complete (ready for data).	1	On	1	On
13	The data transfer can now start. Data transfer is performed using SNA/SDLC protocols in half-duplex mode. SDLC operation is the same as SDLC switched operation after a call is established.	Data	On	Data	On

After data transfer is complete, the call clearing phase is entered (see Figure 3-7 and the *Switched Network Call Clearing Sequence* table following). The host system causes the 5294 Control Unit to initiate call clearing by sending an SDLC disconnect (DISC) command.

Switched Network Call Clearing

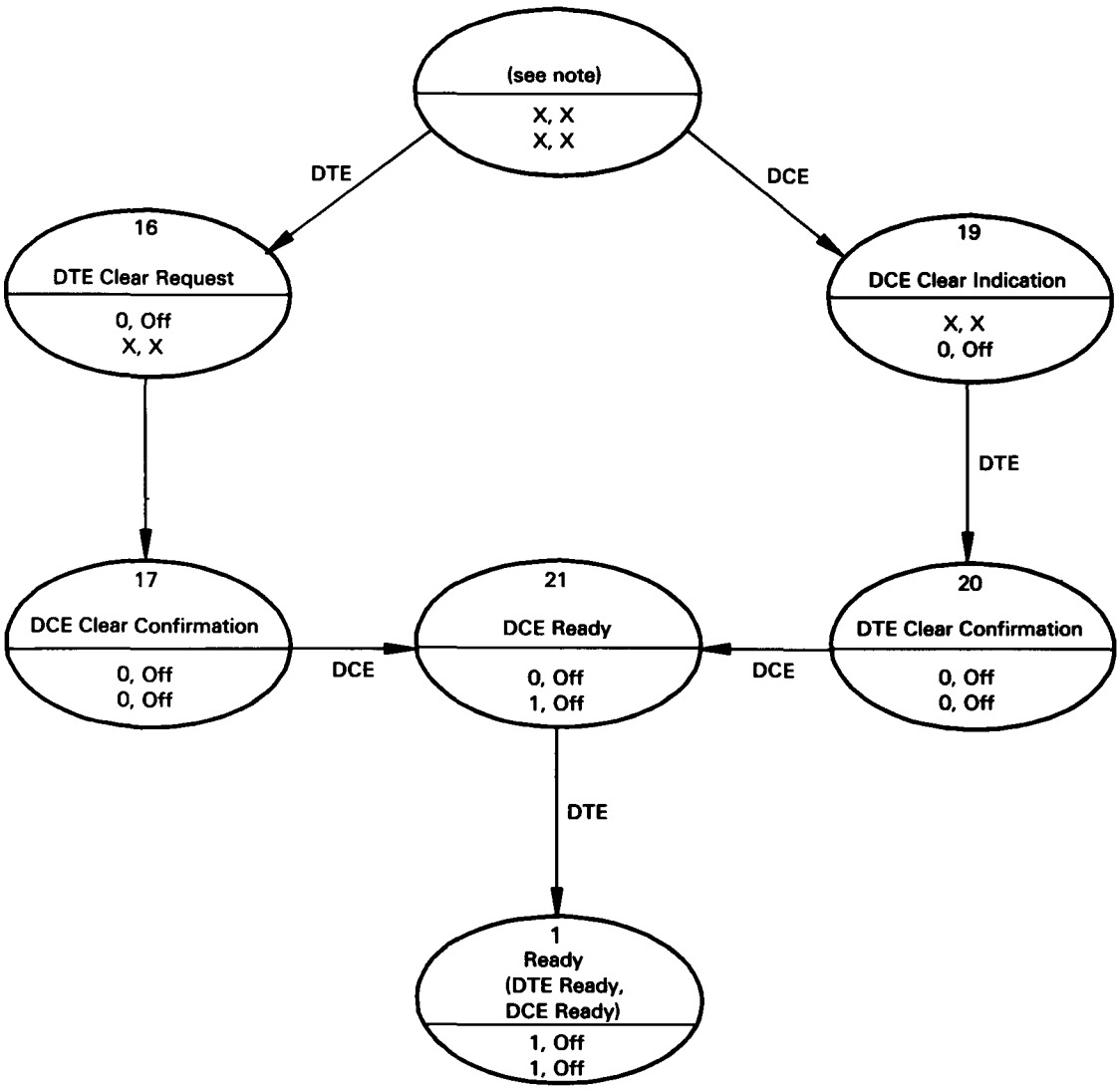

Note: This may be any state shown in Figure 3-2 except the 'ready' state (1).

Figure 3-7. Clearing Phase Interface State Diagram
(circuit-switched operation)

Switched Network Call Clearing Sequence

The following figures show the sequence of states pictured in the state diagram on the preceding page that are used for call clearing on an X.21 switched network.

Note: The active levels for X.21 signals are:

0 for data lines

On for control lines

Call Clearing after Normal Data Transfer Operation

State	Description	Transmit	Control	Receive	Indicate
13	The 5294 Control Unit recognizes the end of data transfer as a result of receiving an SDLC DISC command from the host system.	1	On	Data (SDLC DISC)	On
16	The 5294 Control Unit initiates call clearing by sending a clear request to the DCE.	0	Off	1	On
17	The DCE recognizes the end of the data transfer (acknowledgment of the clear request from the 5294 Control Unit).	0	Off	0	Off
21	The DCE returns to the ready state.	0	Off	1	Off
1	The 5294 Control Unit returns to the ready state.	1	Off	1	Off

Call Clearing after Facility Registration or a 5294-Detected Error

State	Description	Transmit	Control	Receive	Indicate
XX	The 5294 Control Unit recognizes that a call clearing is required due to facility registration complete or a detected error.				
16	The 5294 Control Unit signals a Clear Request to the DCE.	0	Off	Can be 0/1	Can be On/Off
17	The DCE acknowledges the Clear Request from the 5294 Control Unit (a DCE Clear confirmation).	0	Off	1	Off
21	The DCE returns to the ready state.	0	Off	1	Off
1	The 5294 Control Unit returns to the ready state.	1	Off	1	Off

After a DCE/Network-Detected Error or a Clear Request by the Remote DTE (Host System)

Call Clearing after Normal Data Transfer Operation

State	Description	Transmit	Control	Receive	Indicate
XX	The DCE/network recognizes that a call clearing is required due to an error or a Clear request by the remote (host system) DTE.				
19	The DCE signals a Clear Indication to the 5294 Control Unit.	Can be 0/1	Can be On/Off	0	Off
20	The 5294 Control Unit acknowledges the Clear Indication from the DCE (a DTE Clear confirmation).	0	Off	0	Off
21	The DCE returns to the ready state.	0	Off	1	Off
1	The calling station returns to the ready state.	1	Off	1	Off

Features Theory

The IBM 5294 Control Unit has the following features available:

- Extended Cluster feature
- EIA/CCITT Interface (RS-232C and V.24/V.28)
- Digital Data Service Adapter (DDSA) feature
- XLCA (X.21 Line Communication Adapter X.24/X.27)
- X.21 Switched Support feature
- X.25 feature
- Multinational Character Set, including an Overstrike/Hex key (standard on World Trade machines)
- Expanded Function feature (includes the following):
  - Copy-to-Printer Support
  - Magnetic Stripe Reader Support
  - Selector Light Pen Support
  - Self-Check Support
- Extended Function "A" feature (includes the following):
  - Copy-to-Printer Support
  - Magnetic Stripe Reader Support
  - Selector Light Pen Support
  - Self-Check Support
  - Intelligent Printer Data Stream (IPDS) Printer Support
- Text Entry Assist feature
- Text Entry Assist "A" feature
- IBM Enhanced Keyboard feature

Each of these features is described in detail in this section.

Extended Cluster Feature

This feature consists of a feature driver/receiver card and an internal twinaxial cable with two ports (port numbers 2 and 3) attached. The feature driver/receiver card is the same type as the standard driver/receiver card and plugs into socket C4 of the logic board. The internal twinaxial cable connector plugs into J1, pins 8 through 14, on the logic board (see 0520).

This feature permits the total number of work stations attached to the work station controller to be increased from four to eight. The maximum length of cable off any port is 1525 meters (5000 feet). Only seven work stations can be attached to any port.

Note: If the X.25 feature is installed, the maximum number of work stations that can be attached is six.

EIA/CCITT Interface Feature

The EIA/CCITT communication card uses eight signal drivers and eight signal receivers to convert signal levels between the main planar and the external modem/DCE. Signal levels from the main planar are converted to EIA/CCITT signal levels to the external modem/DCE, and EIA/CCITT signal levels from the external modem/DCE are converted to signal levels for the main planar. This feature can operate at speeds up to 20,000 bps. See also 1061.

Digital Data Service Adapter (DDSA) Feature

This feature permits the control unit to be connected to an AT&T[12] private line DDS, using the AT&T channel service unit in the US or directly to a host system using an adapter in World Trade countries.

The DDSA feature includes a DDSA communication card, a 6-meter (20-foot) communication cable, and a wrap connector.

The DDSA feature functions as a 4-wire duplex adapter at a speed of 2400 bps, 4800 bps, 9600 bps, or 56K bps. Jumpers on the DDSA card (1051) are set to match the DDSA line speed. The line speed is determined by the type of service ordered and cannot be changed by the jumper setting.

The DDSA feature has a double loopback function, which permits data from a remote station to be looped back down the line and checked by the same station. The DDSA does not transmit any signals to the network while doing an internal wrap test. See also 1062.

XLCA Feature

The XLCA feature consists of an XLCA communication card, located in sockets C1 and C2 on the logic board. This feature permits the IBM 5294 Control Unit to interface with a CCITT X.21 (X.24/X.27) network at speeds up to 48,000 bps. This interface standard defines the connection of DTE (data terminal equipment) to synchronous digital public data networks. See also 1063.

---

12 A trademark of the American Telephone and Telegraph Co.

X.21 Switched Support Feature

The X.21 Switched Support feature permits attaching the 5294 Control Unit to an X.21 switched communication network at speeds from 2400 bps to 48,000 bps. This feature also supports many of the X.21 network options such as call progress signaling, auto answering, address calling, and direct calling.

This feature on the 5294 Control Unit consists of a ROS control module that is plugged into position 2 of the feature ROS card, which goes into sockets C5 and C6 of the logic board (see 0710), and the XLCA communication card located in sockets C1 and C2.

When the X.21 Switched Support feature is installed, a maximum of eight work stations can be attached to the 5294.

For information on X.21 switched communication protocols, see *X.21 Switched Protocols Description* in the *Theory* section of this manual.

X.25 Feature

The X.25 feature permits the IBM 5294 Control Unit to interface with the CCITT X.25 packet-switching network. The feature consists of a ROS control module that is plugged into position 2 of the feature ROS card that goes into sockets C5 and C6 of the logic board (see 0710).

For information on X.25 protocols, see *X.25 Protocols Description*, in the *Theory* section of this manual.

When the X.25 feature is installed, the maximum number of work stations that can be attached to the work station controller is six.

When the X.25 feature is installed, either the EIA/CCITT communication feature for X.21 bis interface or the X.21 single converter feature (XLCA communication card) X.21 native (X.24/X.27) must be installed (see the *Communication Feature Information* section).

For more information, see the *IBM X.25 Interface for Attaching IBM SNA Nodes to Packet-Switched Data Networks General Information Manual*, GA27-3345.

Multinational Character Set Feature

This feature makes possible the display of the 188-character multinational character set. When the Multinational Character Set feature is installed, the hexadecimal code for a specific character is the same for all countries or language groups. For example, without the Multinational Character Set feature installed, a display unit that received a hex 4A to display, would display a cent sign (¢) for the US/Canada (English) language group and an Å for the Austria/Germany language group. With the Multinational Character Set feature installed, a hex B0 will display a cent sign (¢) and a hex 63 will display as an Å, regardless of the country.

Because the keyboard used for the country/language group is the same as the one used with the multinational character set, not all characters of the multinational character set can be entered by pressing a single key for each character. For the characters that need double-key entry, the Multinational Character Set feature also has the diacritic overstrike function and the hex key function.

The hex key function is available to all 5294 users.

The diacritic key function is also available with the Enhanced Keyboard feature (on the 5294) for US keyboards.

Hex Key Function

By entering hexadecimal codes on the keyboard, you can generate any EBCDIC character that is not available on the keyboard and is needed for input and displaying in an input field. The hexadecimal usage of the keyboard is not permitted when the display station is in the Insert mode. See the following chart for valid characters.

To enter a hexadecimal code for an EBCDIC character, do the following:

1. Press the Cmd key.
2. Press the (Grave Accent) key on the typewriter-like keyboard or the key on the data entry keyboard (the first key on the top row located to the right of the Cmd key).

   On 3179, 3180, and 3196 displays, press and hold the Alt key, then press the Hex key.
3. Press the key for the first character of the hexadecimal code (only 4 through 9 or A through F is valid).
4. Press the key for the second character of the hexadecimal code (0 through 9 or A through F is valid).
5. Repeat the steps above for each EBCDIC character to be generated.

Note: FF is not a valid hexadecimal combination that can be entered.

After the hexadecimal code for a valid EBCDIC character has been entered, the EBCDIC character will be shown on the display screen.

Diacritic Key Function

A diacritic key permits you to place a diacritic mark above a character to indicate a different sound for that character.

Various diacritic keys are available. However, the only diacritic you can enter above a character is one that appears on one of the diacritic keys on your keyboard. The diacritics that are commonly available are shown below:

` (Grave Accent)

' (Acute Accent)

~ (Tilde)

^ (Circumflex)

¨ (Diaeresis)

ƀ (Cedilla)

To enter a diacritic above a character, press the diacritic key and then the character. When the Multinational Character Set feature is installed, (or when the Enhanced Keyboard feature is installed and your are using a US keyboard), the cursor will remain in the same position after a diacritic key is pressed, waiting for the entry of a character. When the character is entered, the work station controller then checks to see that the diacritic key and the character key pressed are valid combinations. Valid combinations for each diacritic are shown below:

Diacritic Character	**Permitted Characters**
` (Grave Accent)	A E I O U
' (Acute Accent)	A E I O U
~ (Tilde)	A N O
^ (Circumflex)	A E I O U
¨ (Diaeresis)	A E I O U y (Y is permitted only as a lowercase character)
ƀ (Cedilla)	C

After the diacritic and the character combination is checked and found to be correct, the hexadecimal code for the character with the accent mark is written into the storage for display and the cursor is moved to the next position. To enter diacritics not present on your keyboard, use the hex key function.

Using the Hexadecimal Code to Enter a Character

The characters permitted and the comparable hexadecimal codes are given in Figure 2-3, *IBM 5250 Information Display System Functions Reference Manual.*

Expanded Function Feature

The Expanded Function feature includes the copy-to-printer, magnetic stripe reader, selector light pen, and self-check support.

For Model K01 and S01, the copy-to-printer, magnetic stripe reader, and selector light pen support is provided only for non-ideographic display stations (including Katakana). Self-check support is supplied for all display stations when in a non-ideographic field.

The feature on the 5294 Control Unit consists of a ROS module that is plugged into position 1 of the old Feature ROS card, or any position on the new Feature ROS card with the proper switch setting (see 0750). The Feature ROS card is plugged into sockets C5 and C6 (see 0710).

Copy-to-Printer Support (Not Supported By Some Systems; See the System Documentation)

The copy-to-printer feature permits direct transfer and printing of a screen image received from an attached display station. This direct transfer is to a printer attached to the work station controller. The selection of the printer is controlled by the system program.

Magnetic Stripe Reader (MSR) Support

The magnetic stripe reader reads magnetic stripes on documents such as credit cards and identification cards. Reading of the magnetic stripe document is done as follows:

Note: The MSR is placed with the open part (throat) of the slot toward the right.

1. The operator inserts the document so that the magnetic stripe is at the bottom of the document and is facing the operator.

2. The document is inserted into the throat so that the bottom of the document is against the bottom surface of the slot plate.

3. The document is moved smoothly and continuously through the slot from right to left. The document must remain against the bottom surface of the slot.

The MSR can read documents from 0.02 millimeters (0.007 inches) to 0.12 millimeters (0.045 inches) thick at a speed of 12 to 125 millimeters (5 to 49 inches) per second. The MSR can read at any speed in this range; therefore, a constant speed through the slot is not necessary.

The MSR contains a reading head, an amplifier, and a document-sensing photocell.

The photocell senses a document and gets the MSR adapter ready to receive the 5 bits (4 data bits and 1 parity bit) of numeric data from the MSR. The data is read from the document by the reading head and amplified by the amplifier.

Data that is read from the document is stored in a buffer on the MSR card. Up to a maximum of 128 bytes of data can be stored (125 data characters plus the three SOM, EOM, or LRC characters). The MSR card checks for error conditions and sets the error bit on in all data bytes if an error is found. Error conditions checked are:

No SOM, EOM, or LRC character

A speed error

An LRC error

The MSR is owned and maintained by the customer, but the work station adapter card is maintained as part of the work station.

For more information, see the *IBM 5250 Information Display System Functions Reference Manual,* SA21-9247.

Selector Light Pen (SLP) Support

The Selector Light Pen permits the operator to select the desired fields displayed on the display screen. By using the light pen, the operator can select the fields without the use of the keyboard. The fields selected by the operator must be defined as light pen input fields by a field control word. For the best operation, the following format and guide should be used for the design of a light pen input field.

Recommended Light Pen Field Format

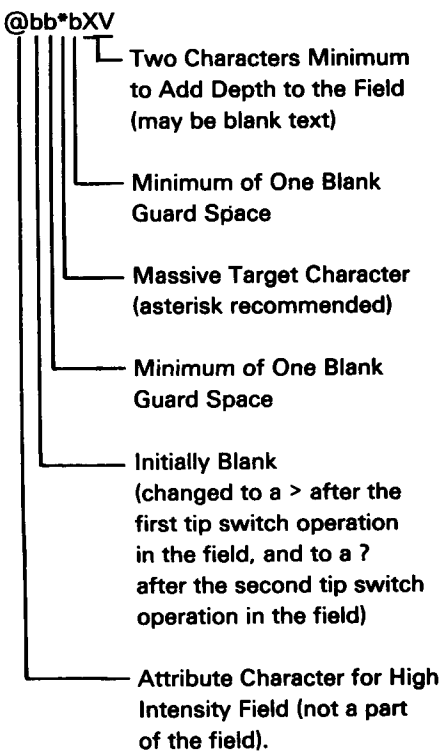

The best results are obtained when there is only one light pen field per display line. If two or more light pen fields must be on the same display line, place them as far apart as possible. Other bypass or input fields may be on the same line.

For more information, see the *IBM 5250 Information Display System Functions Reference Manual*, SA21-9247.

Self-Check Support (Modulus 10 and 11)

The self-check feature supplies the work station controller with a method for checking data in fields that contain a precalculated self-check digit entered from an attached display station keyboard.

Self-check for a field is initiated by the host system, which describes an input field as a self-check field by using the suitable field control word: B1A0 for modulus 10 and B140 for modulus 11. All fields, including signed numeric, alphabetic only, numeric only, and alphameric fields, can be specified for checking.

All characters use the 4 low-order bits from their EBCDIC representation when the 4 low-order bits are in the 0 through 9 range. That is, the EBCDIC representation of A is C1; therefore, A equals 1. All other characters with their 4 low-order bits in the A through F range are replaced by zeros. The EBCDIC representation of percent (%) is 6C; therefore, % equals 0.

Example:

Character	EBCDIC Code	Four Low-Order Bits Are Equal To	Number Used to Calculate Check Digit
0	1111 0000	0	0
1	1111 0001	1	1
5	1111 0101	5	5
8	1111 1000	8	8
A	1100 0001	1	1
C	1100 0011	3	3
X	1110 0111	7	7
%	0110 1100	C	0
'	0110 1011	B	0

Modulus 10

Modulus 10 can be calculated for any field from 2 to 31 characters long. To calculate the modulus 10 check digit, do the following:

1. Multiply the units position of the field (not the check digit) by 2. Multiply the tens position of the field by 1. Go to the high-order position of the field, multiplying alternately by 2 and 1.

2. Add the digits of the products.

3. Subtract the sum of the digits from the next higher number ending in 0.

The difference is the self-check digit.
Example:

Self-check field	A F 1 2 7 6 5
Multiplier	2 1 2 1 2 1 2
Product	2 6 2 2 14 6 10
Sum of the digits	2+6+2+2+1+4+6+1+0 = 24
Next higher number ending in 0	30
Subtract the sum of the digits	30-24 = 6
Self-check digit	6
Self-check field with check digit	A F 1 2 7 6 5 6

Modulus 11

Modulus 11 can be calculated for any field from 2 to 31 characters long. To calculate the modulus 11 check digit, do the following:

1. Assign a multiplier to each position of the field. Starting in the units position (not the check digit position) and then going to the high-order position of the field, the multipliers are 2, 3, 4, 5, 6, 7, 2, 3, 4, 5, 6, 7, and so on.

2. Multiply each character by its assigned multiplier.

3. Add the products.

4. Divide the sum of the products by 11.

5. Subtract the remainder from 11.

The difference is the self-check digit.

Note: If the remainder from step 4 is 0, the self-check digit is 0. If the remainder is 1, the character combination has no self-check digit. Ensure that this character combination is not used in a self-check field.
Example:

Self-check field	A F 1 2 7 6 5
Multiplier	2 7 6 5 4 3 2
Product	2 42 6 10 28 18 10
Sum	2+42+6+10+28+18+10 = 116
Divide	116÷11 = 10 plus a remainder of 6
Subtract	11-6 = 5
Self-check digit	5
Self-check field with check digit	A F 1 2 7 6 5 5

Extended Function A Feature (Model 01 Only)

The Extended Function A feature includes the copy-to-printer, magnetic stripe reader, selector light pen, and self-check support.

The feature supports any IPDS (intelligent printer data stream) printer.

The feature on the 5294 control unit consists of a ROS control module plugged into position 1 of the old Feature ROS card, or any position on the new Feature ROS card with the proper switch setting (see 0750). The feature ROS card is located at C5 and C6. (See 0710.)

For a description of copy-to-printer, magnetic stripe reader, selector light pen, and self-check support, see the Expanded Function feature.

Text Entry Assist Feature

The Text Entry Assist feature permits use of the host system text entry assist program (System/36 hosts only) by operators at remote work stations attached to a 5294 Control Unit.

The feature provides text entry operations such as word wrap, continuous text entry, tab entry and control, split-screen format, and prompting.

The feature on the 5294 Control Unit consists of two ROS control modules that are plugged into positions 3 and 4 of the feature ROS card that goes into sockets C5 and C6 of the logic board (see 0710).

The Text Entry Assist "A" feature provides support for additional functions offered by Release 5.1 (or later) of DisplayWrite/36.

Enhanced Keyboard Feature

The Enhanced Keyboard feature allows displays with Enhanced Keyboards to be attached to and used with a 5294. It also provides the diacritic key function for non-multinational users.

It provides direct support for new keyboard functions, such as single key F-key support and ALT shift, which were previously supported only by keyboard emulation on the typewriter (122-key) keyboard.

The feature on the 5294 Control Unit consists of the new feature ROS card, and a ROS module. (See 0760 for details.) The new feature ROS card is plugged into sockets C5 and C6. (See 0710.)

Parts Catalog

HOW TO USE A PARTS CATALOG 5-4

CATALOG SECTION 5-6

Figure 1. Base Assembly 5-6
Figure 2. Base Assembly 5-8
Figure 3. Base Assembly 5-10
Figure 4. I/O Panel Assembly 5-12
Figure 5. Line Cord Chart 5-14
Figure 6. Cable Chart 5-16

NUMERICAL INDEX 5-16

Quick Reference Fru List

AC Power Cables . . . . . See Fig. 5

DDSA Cable 2452255
DDSA Card 8527032
EIA Cable 2452259
EIA Card (New Style) 2452027
EIA Card (Old Style) 5864668
Enhanced Keyboard Feature ROS Module 96X4650
Extended Function A Feature ROS Module 63X4457
Extended Function A for Model K01-S01 . . . . . 15F9922
Expanded Function Feature ROS Module Model K01-S01 2452381
Fan Assembly (100V) 2452798
Fan Assembly (200V) 2452799
Fuse (1A) 303549
Fuse (2A) 615683
Internal AC Cable Asm (Austria, Yugoslavia and South Africa Only) 2452260
Internal AC Cable Asm (Except Austria, Yugoslavia and South Africa) 2452277
Internal Communication Cable 2452230
I/O Cable Assembly 2452273
Japanese Translate Card (For Use With Model 01 Only) 2452383
LED and Cable Assembly 2452217
Logic Board 2452166
Main Planar, Model K01, With or W/O X.25 W/O X.21 Switched 69X8090
Main Planar, Model K01, W/X.21 Switched 69X8089
Main Planar U.S., Canada (English), Japan With X.25 . . . . . 66X9998
Main Planar U.S., Canada (English), Japan W/O X.21 Switched or X.25 . . . . . 63X4580
Main Planar U.S., Canada (English), Japan W/X.21 Switched 63X4578
Main Planar WT, (Except Canada (English), Japan With X.25 . . . . . 66X9999
Main Planar WT, (Except Canada (English), Japan W/O X.21 Switched or X.25 . 63X4581
Main Planar WT, (Except U.S., Canada (English), Japan) W/X.21 Switched 63X4579
Power Supply Asm (100V) 2452182
Power Supply Asm (200V) 2452183
Rate Switch (WTC) 2452283
Rate Switch Cable Assembly (WTC) 2452274
ROS Feature Pre-Reg Card (New Style) 67X0718
ROS Feature Pre-Reg Card (Old Style) 2451982
Southeast Asia Region Translate Card 69X7792
Test/Normal Switch 2452283
Text Entry Assist Feature ROS Module A 2452072
Text Entry Assist Feature ROS Module B 2452022
Text Entry Assist "A" Feature ROS Module A 96X4601
Text Entry Assist "A" Feature ROS Module B 96X4598
Twinaxial Driver/Receiver Card 2452110
X.21 Switched Support Feature ROS Module 2452080
X.25 ROS Module 2452371
XLCA Cable 2452187
XLCA Card 8564561

Part I

To find parts quickly, a general understanding of the structure of this catalog is necessary. The catalog is divided into three major sections:

- The Visual Index, containing overall views of the machine, with call-outs pointing to detailed figures.
- The Catalog Section, containing a pictorial breakdown of assemblies and subassemblies.
- The Numerical Index, which is a numerical list of all parts used in the machine, with cross-references to the figure on which the part is found.

VISUAL INDEX
The Visual Index, located before the Catalog Section, contains a reduced illustration of every figure in the Catalog Section. The reduced illustrations are tied together with flow arrows to form a natural progression from large assemblies to small assemblies and possibly subassemblies. In effect, a visual table of contents is formed by the Visual Index illustrations.

CATALOG SECTION
The Catalog Section contains the full-sized illustrations previously noted in the Visual Index. Index numbers on figures refer to corresponding entries in the Group Assembly Parts List accompanying each figure. Refer to part II for explanation of terms used in the Group Assembly Parts List.

NUMERICAL INDEX
The Numerical Index is located after the Catalog Section and contains a complete list, in numerical order, of all part numbers used on the machine. Listed with the part number is the index and figure number on which the part is illustrated. The numerical index makes it possible to locate a part when only the part number is known.

STACKED INDEX NUMBERS
Stacked Index numbers are used when showing a part and its attaching hardware. The circled index number indicates the assembly is broken down within the figure.

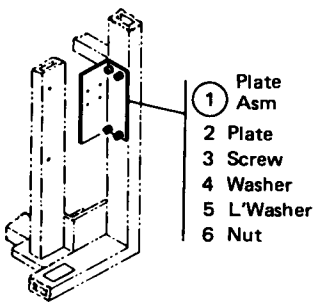

ILLUSTRATION NOTES
Cross-reference notes are directly on the illustration. The illustration's next higher assembly reference, normally located in the upper left corner of the page will read: "For Parts Not Shown See Figure X". If an assembly is referenced to a lower level figure, the note located next to the index number will read: " 5 See Figure X."

DOUBLE LINED DETAIL BOX
The double lined box differentiates between parts shown on the basic model and parts related to a level and/or feature difference. An explanation of the level or feature difference is given in the double lined box.

FINDING A PART
The Visual Index is the starting point for locating a part. The illustrations in the Visual Index are reduced versions of all illustrations in the Catalog Section; therefore, the illustrations can be used to find the assembly containing the desired part. Use references to the detailed figure in the Catalog Section, or to another Visual Index illustration, to determine location of part number.

Once the detailed figure in the catalog section is determined, finding the part on the figure and referring to the listing for the part number and description is all that is required in most cases. If the first catalog section figure referenced shows the assembly containing the required part, the index number for the assembly will reference a lower-level figure where the assembly is broken down to its component parts. If the figure referenced by the Visual Index contains neither the part nor an assembly containing the part, it is then necessary to go to the next higher assembly figure. This figure should then contain the part or an assembly containing the part; if not, an even higher level figure must be used. Refer back to the Visual Index for some other figure that could show the desired part.

Note: Many detailed parts are unavailable, because they are part of an inseparable assembly (two or more parts welded or bonded together), or because they are part of an assembly purchased as a unit. If the part is found on a purchased assembly, and the detail parts of this assembly do not have IBM part numbers, in either case, you need to obtain the part number of the assembly, rather than the detailed part.

EXAMPLE FOR ORDERING PARTS

FIGURE-INDEX NUMBER	PART NUMBER	UNITS PER ASM.	DESCRIPTION FOR FIGURE 25 1 2 3 4
25	2592881		FAN ASM,60 HZ
- 1	2172166	1	. GUARD
- 2	2591482	AR	. SEAL
- 3	2592882	1	. BRACKET
- 4	2591431	1	. FAN ASM
- 5	334932	1	. . RING,TERMINAL
- 6	1166117	1	. . CONNECTOR
- 7	1166114	3	. . TERMINAL
- 8	2591402	1	. . FAN

If the entire fan is required, part number **2592881** should be ordered (all one dot items will be received). If only the subassembly is required, part number **2591431** should be ordered (all two dot items will be received). Each part may be ordered individually.

Note: If you order a part that requires a label, make sure you order the label in the correct langauge. For example: A part of a Quebec machine should have a French Canadian language label rather than a French language label.

Part II

Ⓐ *AR*
As Required (AR) in the units per assembly column denotes that the quantity is used as required.

Ⓑ *INDENTURE*
The relationship of a part to its next higher assembly is indicated by indentures. For example:

1 2 3 4
Unit
. Assemblies and Detail Parts of Unit
. Attaching Parts for Assemblies & Detail Parts
. . Subassemblies
. . Attaching Parts of Subassemblies
. . . Detail Parts for Subassemblies, etc.

Ⓒ *NR*
The NR in the part number column denotes the part is procurable but not recommended for field replacement, and that the next higher assembly should be ordered.

Ⓓ *NP*
The entry NP in the part number column denotes the assembly is non-procurable and the detail parts should be ordered separately.

Ⓔ *NO NO.*
When this indication appears in the part number column, it denotes a group of parts for which no assembly part number has been assigned, and the detail parts should be ordered separately.

EXAMPLE OF PARTS LIST

FIGURE-INDEX	PART NUMBER	UNITS	DESCRIPTION FOR FIGURE 5 1 2 3 4
5	NO NO. (E) (C)	(B)	BEZEL AND OPERATOR PANEL ASSEMBLY
– 1	2767400	1	. Bracket, LED and Switch
– 2	7362104 NR	1	. Potentiometer
– 3	7363983	1	. Potentiometer
– 4	7362299	2	. Knob Asm
– 5	8330754 (A)	5	. LED, Light
– 6	5552875	1	. Block, LED
– 7	1621811	AR	. Clip
– 8	1940	5	. Screw, Thd Form-hex Wshr Hd 6-19 x 1/2 Lg
– 9	5552875	1	. Cable Asm, CE Diag Ind and Switch
– 10	7362322 (D)	1	. Cable Asm, AC Distribution
– 11	7362939	1	. . Switch
– 12	2767401 NP	1	. Bezel, English
– 12	7364967 NP	1	. Bezel, French
– 12	7362142 NP	1	. Bezel, Japanese
– 12	2767391 NP	1	. Bezel, Spanish
– 12	8330738 NP	1	. Bezel, German
– 12	515661 NP	1	. Bezel, Italian

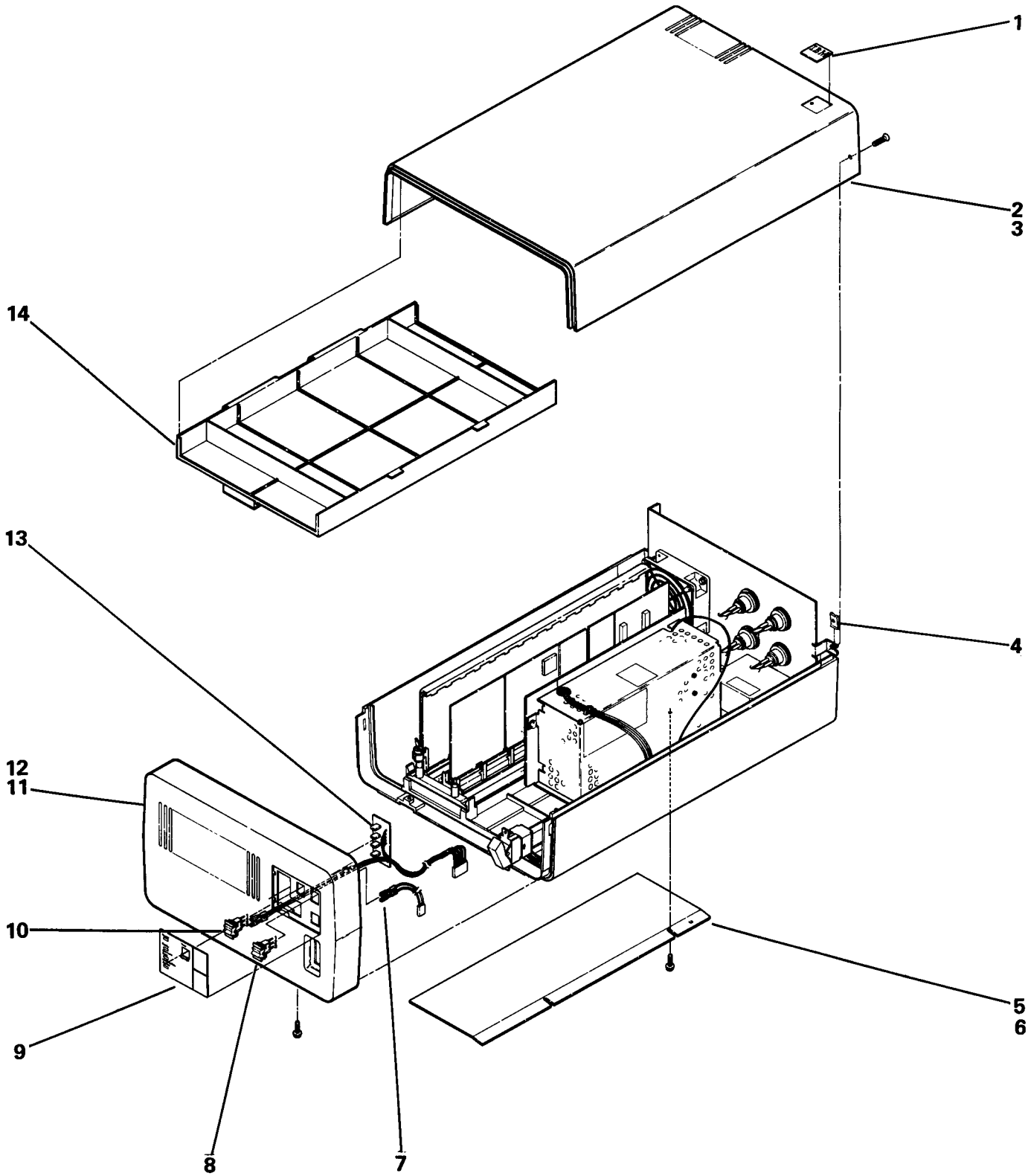

FIGURE 1. BASE ASSEMBLY. SEE LIST 1.

FIGURE-INDEX	PART NUMBER	UNITS	DESCRIPTION
1-0	No PN	1	Final Assembly
-1	2452272	1	. Logo Model 01
-1	2452362	1	. Logo Model K01
-2	2452062	1	. Top Cover
-3	2452189	2	. Screw
-4	4176278	2	. Nut,Clip
-5	2452247	1	. Cover,Logic Board Access
-6	1621813	2	. Screw,Thd-Form Hex-Washr Hd M4 x 16 Lg
-7	2452274	1	. Line Speed Cable Assembly[World Trade Only]
-8	2452283	1	. Line Speed Switch[World Trade Only]
-9	2452305	1	. Panel Assembly English[Standard]
-9	2452307	1	. Panel Assembly Spanish[Standard]
-9	2452308	1	. Panel Assembly German[Standard]
-9	2452309	1	. Panel Assembly Italian[Standard]
-9	2452310	1	. Panel Assembly Japanese[Standard]
-9	2452311	1	. Panel Assembly French/Canadian,French [Standard]
-9	2452312	1	. Panel Assembly English[Line Speed]
-9	2452314	1	. Panel Assembly Spanish[Line Speed]
-9	2452315	1	. Panel Assembly German[Line Speed]
-9	2452316	1	. Panel Assembly Italian[Line Speed]
-9	2452317	1	. Panel Assembly Japanese[Line Speed]
-9	2452318	1	. Panel Assembly French/Canadian, French[Line Speed]
-10	2452283	1	. Test/Normal Switch
-11	2452085	1	. Front Cover
-12	2549531	2	. Screw,Thd-Form Hex Hd M4.5 x 12 Lg
-13	2452217	1	. LED and Cable Assembly
-14	2452184	1	. Tray Assembly[CE/CSR Manuals]

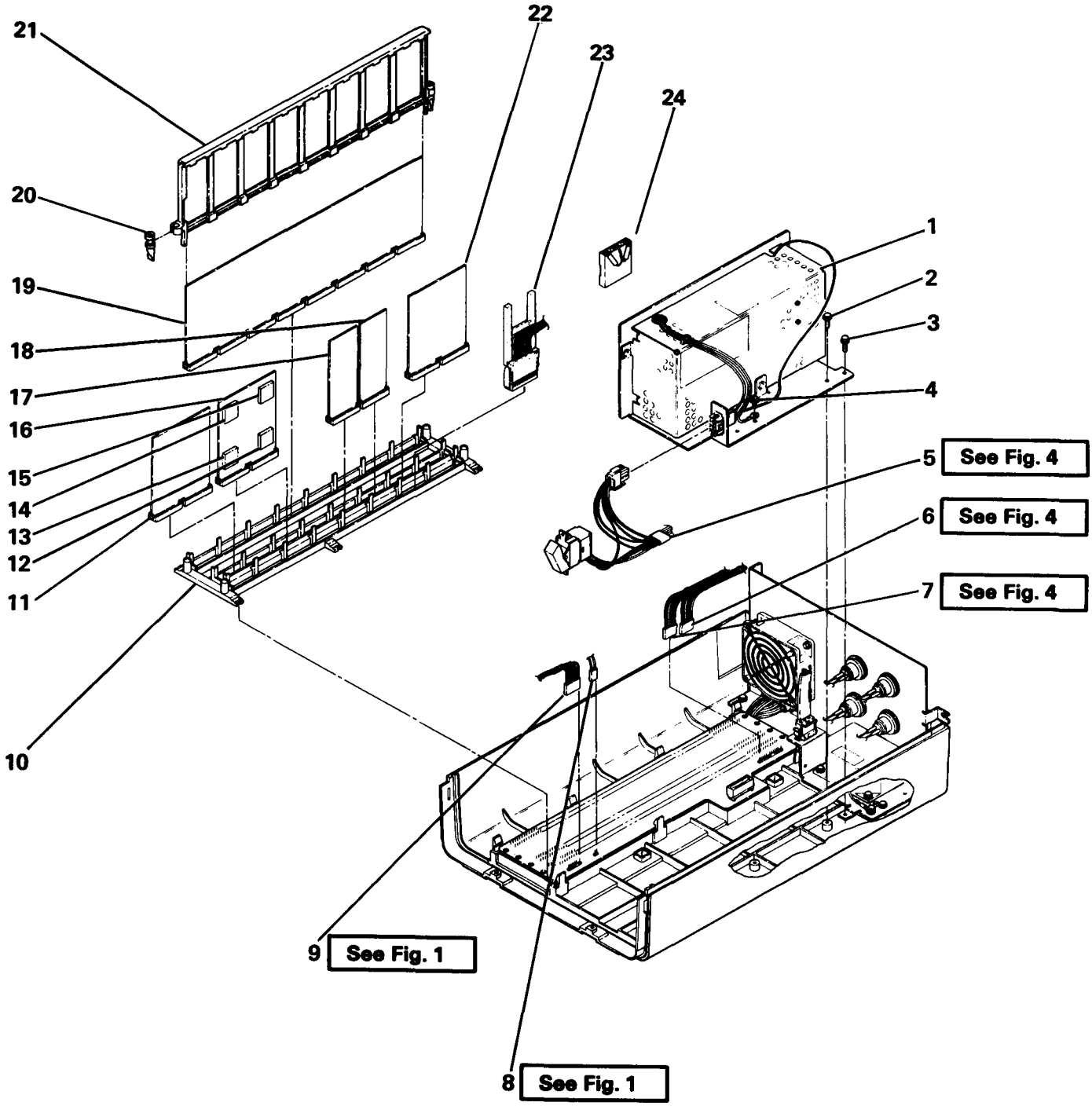

FIGURE 2. BASE ASSEMBLY. SEE LIST 2.

FIGURE-INDEX	PART NUMBER	UNITS	DESCRIPTION
2-0	No PN	1	Base Assembly
-1	2452182	1	• Power Supply 100V 50/60 Hz
-1	2452183	1	• Power Supply 200V 50/60 Hz
-2	4364729	2	• Screw, Thd-Form 4.55 x 1.59 x 10 Lg (Power Supply Mounting)
-3	7362385	1	• Screw, Thd-Form Wshr Hd M4 x 8 Lg (Chassis Ground to I/O Panel)
-4	7362385	1	• Screw, Thd-Form Wshr Hd M4 x 8 Lg (Power Supply Connector Ground)
-5	2452277	1	• Internal AC Cable Assembly (Except Austria, Yugoslavia & South Africa)
-5	2452260	1	• Internal AC Cable Assembly (Austria, Yugoslavia & South Africa only)
-6	2452273	1	• I/O Cable Assembly(Standard)
-7	2452273	1	• I/O Cable Assembly(Feature)
-8	2452274	1	• Rate Switch Cable Assembly(WT Only)
-9	2452217	1	• LED and Cable Assembly
-10	2452251	1	• Guide Block
-11	2452383	1	• Japanese Translate Card (For Use With Model 01 Only) See 0710 For More Information
-11	69X7792	1	• Southeast Asia Region Translate Card (For Use With Model S01 Only) See 0710 For More Information
-11	15F9922	1	• Extended Function A For Model K01-S01 (For Use With Model K01-S01 Only) See 0760 For More Information
-12	63X4457	1	• Extended Function A Feature ROS Module See 0710 For More Information
-12	2452381	1	• Expanded Function Feature ROS Module Model K01-S01 See 0710 For More Information
-12	96X4650	1	• Enhanced Keyboard Feature ROS Module See 0710 For More Information
-13	96X4601	1	• Text Entry Assist "A" Feature ROS Module A See 0710 For More Information
-14	96X4598	1	• Text Entry Assist "A" Feature ROS Module B See 0710 For More Information
-15	2452080	1	• X.21 Switched Feature ROS Module See 0710 For More Information
-15	2452371	1	• X.25 Feature ROS Module See 0710 For More Information
-16	2451982	1	• ROS Feature Pre-Req Card(Old Style) See 0710 For More Information
-16	67X0718	1	• ROS Feature Pre-Req Card(New Style) See 0710 For More Information
-17	2452110	1	• DVR/RCVR Card(Feature)
-18	2452110	1	• DVR/RCVR Card(Standard)
-19	63X4580	1	• Main Planar US, Canada(English), Japan W/O X.21 Switched or X.25
-19	63X4581	1	• Main Planar WT, (Except Canada(English) Japan) W/O X.21 Switched or X.25
-19	66X9998	1	• Main Planar US, Canada(English) Japan With X.25
-19	66X9999	1	• Main Planar WT(Except Canada(English) Japan) With X.25
-19	69X8089	1	• Main Planar Model K01 With or Without X.25, W/O X.21 Switched
-19	63X4578	1	• Main Planar US, Canada(English) Japan With X.21 Switched
-19	63X4579	1	• Main Planar WT,(Except US, Canada(English) Japan) With X.21 Switched
-19	69X8090	1	• Main Planar Model K01/S01 With X.21 Switched
-20	2452141	2	• • Card Jack
-21	2452150	1	• • Card Holder
-22	2452027	1	• EIA Card(New Style)
-22	5864668	1	• EIA Card(Old Style) Obsolete for 5294 (Do Not Use)
-22	8527032	1	• DDSA Card
-22	8564561	1	• XLCA Card
-23	2452230	1	• Internal Communication Cable
-24	2452082	1	• Diode Jumper Assembly for XLCA Card

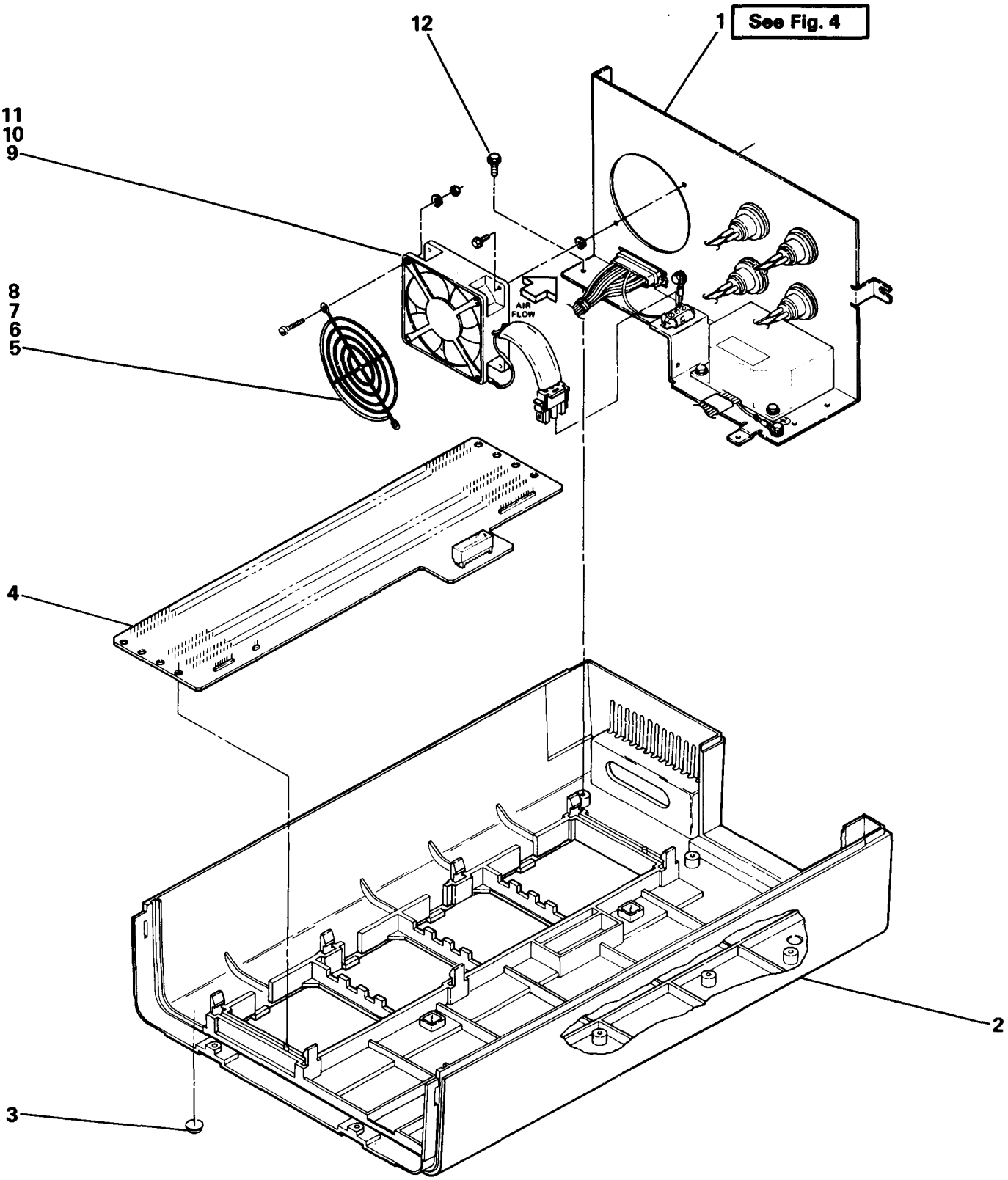

FIGURE 3. BASE ASSEMBLY. SEE LIST 3.

FIGURE-INDEX	PART NUMBER	UNITS	DESCRIPTION
3-0	No PN	1	Base Assembly
-1	No PN	1	. I/O Panel Assembly
-2	2452263	1	. Bottom Cover
-3	5552863	1	. Pad
-4	2452166	1	. Logic Board
-5	2452032	1	. Fan Guard
-6	1621191	2	. Screw,Mach-Slot Pan Hd M4 x 10 Lg (Fan Guard Mounting)
-7	1622346	2	. Washer,Lock-Ext Ster 4.3 ID x 8 OD x .5 Thk(Fan Guard Mounting)
-8	1622403	2	. Nut,Hex-Double Chamfer M4 x 7 fl W x 3.2 Thk(Fan Guard Mounting)
-9	2452798	1	. Fan Assembly 100V
-9	2452799	1	. Fan Assembly 200V
-10	2462685	2	. Screw,Thd-Form Wshr Hd M4 x 8 Lg (Fan Mtg)
-11	45709	2	. Washer,Flat 9/16 OD x 3/16 ID x 1/8 Thk
-12	4364729	3	. Screw,Thd-Form 4.55 x 1.59 x 10 Lg

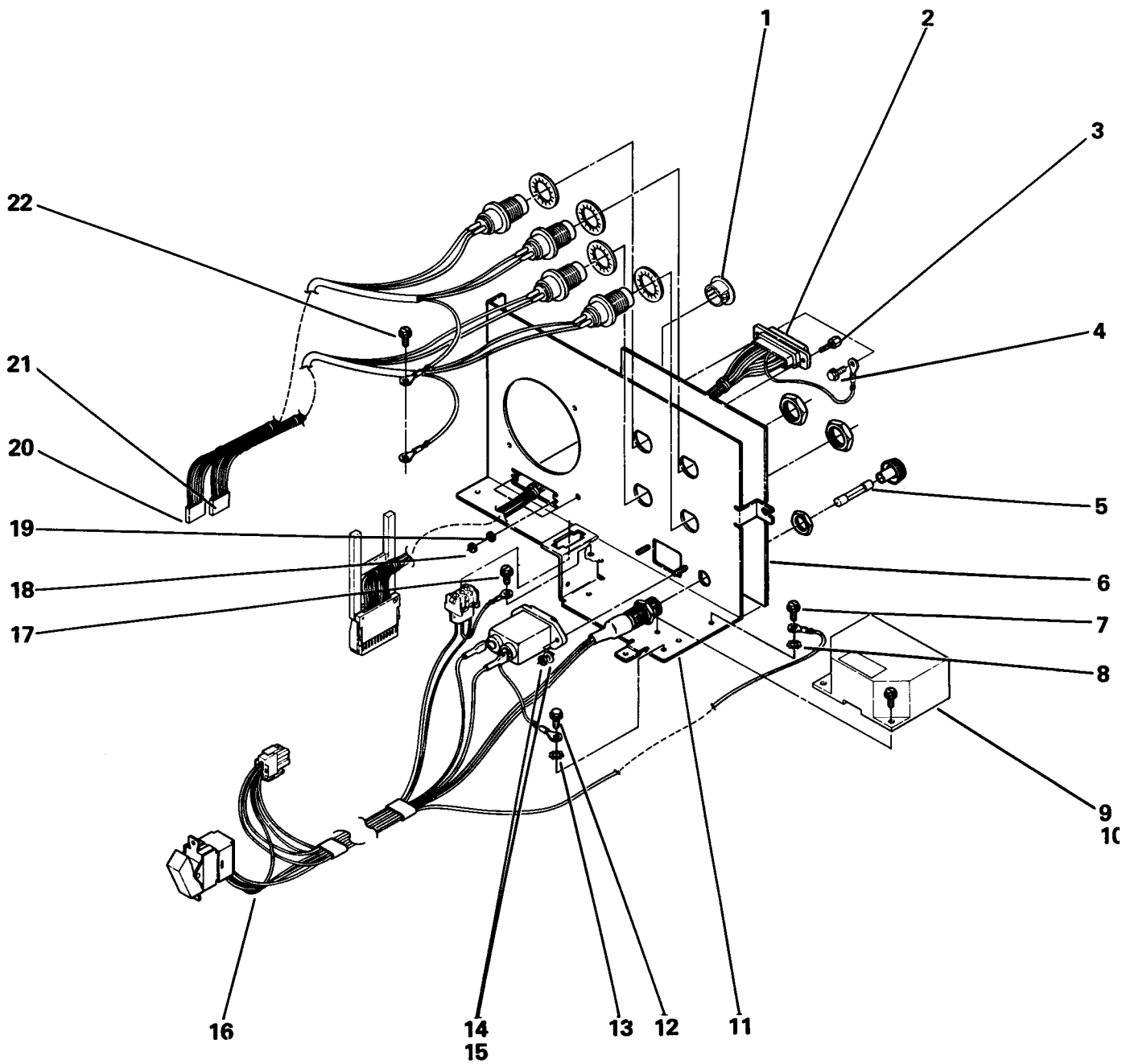

FIGURE 4. I/O PANEL ASSEMBLY. SEE LIST 4.

FIGURE-INDEX	PART NUMBER	UNITS	DESCRIPTION
4-0	No PN	1	I/O Panel Assembly
-1	2452178	2	. Twinax Plugs
-2	2452230	1	. Internal Communication Cable
-3	7364973	2	. Standoff
-4	7362385	1	. Screw,Thd-Form Wshr Hd M4 x 8 Lg (25 Pin Connector Ground)
-5	615683	1	. Fuse 2A/250V 100V Mach
-5	303549	1	. Fuse 1A/250V 200V Mach
-6	2452186	1	. Label
-7	7362385	1	. Screw,Thd-Form Wshr Hd M4 x 8 Lg (Power Supply Ground)
-8	1622346	1	. Washer,Lock-Ext Star 4.3 ID x 8 OD x .5 Thk
-9	2452287	1	. Line Filter Cover
-10	7362385	2	. Screw,Thd-Form Wshr Hd M4 x 8 Lg (Line Filter Cover Mtg)
-11	2452288	1	. I/O Panel
-12	7362385	1	. Screw,Thd-Form Wshr Hd M4 x 8 Lg (Liner Filter Ground)
-13	1622346	1	. Washer,Lock-Ext Star 4.3 ID x 8 OD x .5 Thk
-14	1622401	2	. Nut,Hex-Double Chamfer M3 x 5.5 fl W x 2.4 Thk
-15	1622302	2	. Washer,Lock-Ext Star 4.3 ID x 8 OD x .5 Thk
-16	2452277	1	. Internal AC Cable Assembly
-16	2452260	1	. Internal AC Cable Assembly(Austria, Yugoslavia & South Africa Only)
-17	7362385	1	. Screw,Thd-Form Wshr Hd M4 x 8 Lg
-18	1622389	2	. Nut,Hex M2.5 x 0.45 x 5 Fl W x 2 Thk
-19	1622343	2	. Washer,Lock-Ext Star 2.8 ID x 5.5 OD x .4 Thk
-20	2452273	1	. I/O Cable Assembly(Feature)
-21	2452273	1	. I/O Cable Assembly(Standard)
-22	7362385	1	. Screw,Thd-Form Wshr Hd M4 x 8 Lg

Line Cord Chart

Plug	P/N	Country
Non-Lock	6838234	1.8 M Lg., U.S.
	6841461	2.5 M Lg., U.S., Bahamas, Barbados, Bermuda, Bolivia, Brazil, Canada, Costa Rica, Dominican Republic, Ecuador, El Salvador, Guatemala, Honduras, Jamaica, Japan, Mexico, Netherlands Antilles, Nicaragua, Panama, Peru, Phillipines, South Korea, Taiwan, Thailand, Trinidad, Venezuela
No Plug	5642989	WTC, 60 Hz
No Plug	2684642	WTC, 50 Hz
	2684463	Argentina, Australia, Columbia, New Zealand, Paraguay, Trinidad, Uraguay
	2684647	Austria, Bulgaria, Finland, Germany, Iceland, Indonesia, Iran, Netherlands, Norway, Portugal, Rumania, Spain, Sweden, Turkey
	2684591	Hong Kong, Ireland, Kuwait, Malaysia, Singapore, United Kingdom
	2684648	Algeria, Belgium, France, Greece, Hungary, Poland, Yugoslavia
	2684646	Switzerland
	2684645	Denmark
	2684644	Italy, Chile
	2684590	South Africa
	2684643	Israel
	5642992	Japan, 15A maximum 200V, Thailand, Taiwan, Venezuela

FIGURE 5. LINE CORD CHART.

EXTERNAL COMMUNICATION CABLE ASSEMBLY CHART

P/N	CABLE ASSEMBLY *
2452259	EIA/CCITT
2452255	DDSA
2452187	XLCA
*	Cable assemblies include appropriate wrap connectors.

EIA ADAPTER CABLE CHART

P/N	CABLE
1727744	Adapter cable for use with Datel modems in U.K.
2452096	Adapter cable for use in Belgium and Brazil; other countries for X.21 bis interface as required and with modem eliminators as required
4834494	Adapter cable with test switch for use in Japan

FIGURE 6. CABLE CHART.

NUMERICAL INDEX

PART NUMBER	LIST AND INDEX NO.	PART NUMBER	LIST AND INDEX NO.	PART NUMBER	LIST AND INDEX NO.	PART NUMBER	LIST AND INDEX NO.
45709	3 - 11	2452178	4 - 1	2452288	4 - 11	63X4578	2 - 19
303549	4 - 5	2452182	2 - 1	2452305	1 - 9	63X4579	2 - 19
615683	4 - 5	2452183	2 - 1	2452307	1 - 9	63X4580	2 - 19
15F9922	2 - 11	2452184	1 - 14	2452308	1 - 9	63X4581	2 - 19
1621191	3 - 6	2452186	4 - 6	2452309	1 - 9	66X9998	2 - 19
1621813	1 - 6	2452189	1 - 3	2452310	1 - 9	66X9999	2 - 19
1622302	4 - 15	2452217	1 - 13	2452311	1 - 9	67X0718	2 - 16
1622343	4 - 19	2452217	2 - 9	2452312	1 - 9	69X7792	2 - 11
1622346	3 - 7	2452230	2 - 23	2452314	1 - 9	69X8075	1 - 1
1622346	4 - 8	2452230	4 - 2	2452315	1 - 9	69X8089	2 - 19
1622346	4 - 13	2452247	1 - 5	2452316	1 - 9	69X8090	2 - 19
1622399	4 - 18	2452251	2 - 10	2452317	1 - 9	7362385	2 - 3
1622401	4 - 14	2452260	2 - 5	2452318	1 - 9	7362385	2 - 4
1622403	3 - 8	2452260	4 - 16	2452362	1 - 1	7362385	4 - 4
2451982	2 - 16	2452263	3 - 2	2452371	2 - 15	7362385	4 - 7
2452022	2 - 14	2452272	1 - 1	2452381	2 - 12	7362385	4 - 10
2452027	2 - 22	2452273	2 - 6	2452383	2 - 11	7362385	4 - 12
2452032	3 - 5	2452273	2 - 7	2452798	3 - 9	7362385	4 - 17
2452062	1 - 2	2452273	4 - 20	2452799	3 - 9	7362385	4 - 22
2452072	2 - 13	2452273	4 - 21	2462685	3 - 10	7364973	4 - 3
2452080	2 - 15	2452274	1 - 7	2549531	1 - 12	8527032	2 - 22
2452082	2 - 24	2452274	2 - 8	4176278	1 - 4	8564561	2 - 22
2452085	1 - 11	2452277	2 - 5	4364729	2 - 2	96X4601	2 - 13
2452110	2 - 17	2452277	4 - 16	4364729	3 - 12	96X4650	2 - 12
2452110	2 - 18	2452283	1 - 8	5552863	3 - 3	96X4598	2 - 14
2452141	2 - 20	2452283	1 - 10	5864668	2 - 22		
2452150	2 - 21	2452287	4 - 9	63X4457	2 - 12		
2452166	3 - 4						

CE/CSR Log

Date	Description of Problem/Action Taken (Do not record hours or part number.)	Name

Date	Description of Problem/Action Taken (Do not record hours or part number.)	Name

Glossary

uf. Microfarad.

us. Microsecond.

AC. Alternating current.

ACTLU. Activate logical unit.

addr. Address.

adj. Adjust.

adv. Advance.

alpha. Alphabetic.

ALU. Arithmetic and logic unit.

analog transmission. A signal transmission that is continuously variable in amplitude, frequency, phase, or some combination of all three. (Data characters in a terminal are coded in a DC square wave voltage or in specially identified pulses or signal levels, and are referred to as digital signals. Voice or voice-compatible signals are usually AC voltages that are not easily identified and are known as analog signals.)

ASCII. American National Standard Code for Information Interchange.

attenuate. To decrease in decibels of power in a transmission signal.

attenuation. A decrease in decibels of power in a transmission signal.

auto-answer. A feature that permits a station to respond, without operator action, to a call that it receives over a switched line.

backup MAP. A continuation of the main MAP that is used to isolate an intermittent problem or failure.

beveled edge. The edge of a module that is at an angle.

BIU. Basic information unit.

BLU. Basic link unit.

bps. Bits per second.

buf. Buffer. A storage area that is temporarily reserved for input/output operations.

Cable Thru. A special feature or function that permits multiple display stations or printers to be attached serially to a system cable.

carrier. A continuous signal at a specific frequency that can be modulated or impressed with a second (information-carrying) signal.

CCITT. International Consultative Committee on Telegraph and Telephone.

CD. Data carrier detected.

CDSTL. Connect data set to line.

CE. Customer Engineer.

char. Character.

clk. Clock.

channel service unit. A device that provides the connection between the DDS network and a 5294 work station controller with the DDSA feature installed.

CMOS. Complimentary metal-oxide semiconductor.

comm.. Communication.

common carrier. In the US, a government-regulated private company that supplies the public with telecommunication service facilities; for example, a telephone or telegraph company.

communications facility. The term used to identify a nonswitched or switched network (dial-up).

CMOS. Complementary metal-oxide semiconductor. A type of logic technology.

concurrent mode. An operating mode of the work station controller that allows certain diagnostics to be

performed at the same time that the controller is performing normal operations.

cont.. Controller.

controller. A device that controls the operation of one or more input or output devices.

coupler. See *data coupler*.

CRC. Cyclic redundancy check.

CSR. Customer Service Representative.

CSU. Customer setup.

CTS. Clear to send (also known as RFS).

CV. Converter.

DAA. Data Access arrangement.

DACTLU. De-activate logical unit.

data access arrangement (DAA). (US, Canada, and Japan only) An electrical isolation device required by common carriers to attach to their switched telephone lines or circuits (for US only, applies only when the attaching device is not FCC registered). Provides DC voltage isolation and limits excessive signal levels into the telephone line from the modem. See *data coupler*.

data communication equipment (DCE). The equipment that interfaces with the data terminal equipment. The term DCE includes under-the-cover modems and external modems.

data coupler. (US, Canada, and Japan only) An electrical isolation device required by common carriers to attach to their switched telephone lines or circuits. (For US only, applies only when the attaching device is not FCC registered.) Provides DC voltage isolation and limits excessive signal levels into the telephone line from the modem. See *data access arrangement (DAA)*.

data service unit. A DCE that permits a DTE, using the EIA interface, to be connected to the DDS network.

data stream. A continuing flow of data.

data-derived clocking. A characteristic of the modem operation when the synchronization of receive clock signals is dependent on the presence of receive data transitions; that is, receive data is not continuous 0-bits or 1-bits.

dB. Decibel.

dBm. Decibel based on one milliwatt.

DC. Direct current.

DCE. Data communications equipment.

DDS. Dataphone Digital Service, a trademark of AT&T.

DDSA. Digital data service adapter.

decibel. A unit for expressing the ratio of two amounts of electric or acoustic signal power.

decibel based on one milliwatt (dBm). In communications, this is a measure of relative power. One milliwatt of signal applied to a 600-ohm impedance is 0 dBm.

dedicated mode. An operating mode of the work station controller in which all the resources of the controller are used for diagnostic purposes and no other operations can be performed.

det. Detector.

DI. Data indicator.

diag.. diagram (figure).

Digital Data Service Adapter (DDSA). An adapter that connects a business machine to an AT&T channel service unit for data communications by way of the private line digital data service.

DISC. Disconnect.

disparage. To make the appearance bad although it is not.

DM. Disconnect mode.

DR. Data ring.

driver. A logic element that places a signal on a line.

driver/receiver cards. A card that supplies the interface to the attached work stations. In a receive operation, the cards receive data from the line. In a transmit operation, the cards put data on the line. See reference 0111 for card location.

drvr. Driver.

DSR. Data set ready.

DT. Data tip.

DTE. Data Terminal equipment.

DTR. Data terminal ready.

DXE. Data transmit enable.

dynamically. A condition where information is displayed continuously as conditions change.

earphone. A piece of test equipment that is attached to the dB adapter and used to listen for communication line signals.

EBCDIC. Extended binary-coded decimal interchange code.

EC. engineering change.

echo. A wave that is returned to its starting point as a result of reflection or other causes.

echo clamp duration. The time that a signal line is forced inactive in order to prevent echoes from being detected.

EIA. Electronic Industries Association.

ELLC. Enhanced logical link control.

end-of-message delimiter. A 111 in the station ID that indicates the last frame of a twinaxial message block.

EOC. End of chain.

EOM. End of message.

EOQ. End of command queue.

ERAP. Error recording analysis procedure.

error log. A record of errors that is kept internally by the work station controller.

exclusion key. A key on the telephone handset that transfers the telephone line from the handset to the data coupler.

facility. An optional network service.

FCC. Federal Communication Commission (US only).

FCS. Frame check sequence.

FID. Format identification.

flag. The bit pattern that SDLC uses to identify the start and end of the SDLC frame.

FM. Function management.

FMR. Frame reject.

FRU. Field-replaceable unit.

FSK. Frequency shift keying.

gnd. ground.

half-duplex. In communications, a system that can send alternate transmissions, but not at the same time, in two directions.

HDLC. High-level data link control.

HE. Hard error log.

hex. Hexadecimal.

HH MM SS. Hours, minutes, and seconds.

Hz. Hertz.

I/O. Input/output.

ID. Identification.

ideographic. A character set consisting of both graphics and pictograms, and often other types of symbols, such as Japanese characters.

I-frame. Information frame.

Inactive. Not active. No electrical potential.

Individual table of contents (ITC). A list of all logic part numbers and locations that is included with the machine history.

International Consultative Committee on Telegraph and Telephone. (CCITT) A United Nations committee that suggests worldwide standards for communication interconnections.

IPDS. intelligent printer data stream.

IPDU. Information protocol data unit.

IPL. Initial program load.

ITC. Individual table of contents (in a machine history).

LCID. Logical channel identifier.

LED. Light-emitting diode.

LH. Link header.

line turnaround. The time required to reverse the direction of transmission from send-to-receive or receive-to-send when using a half-duplex communication line.

LL. Leased (nonswitched) line.

LLC. Logical link control.

log. See *error log*.

local session identifier (LSID). An 8-bit sequence in the transmission header for SNA (systems network architecture) that contains the logical unit address and session path information.

local unit ID. A customer-assigned identification.

logical unit (LU). An SNA term that describes a work station attached to the work station controller.

local unit ID. A customer-assigned identification.

loopback. The connecting of the input and output lines of a device for testing.

LPDA. Link problem determination aids.

LSID. Logical session identifier.

LU. Logical unit.

LUSTAT. Logical unit status.

maintenance. A section of this manual that includes locations, procedures, and diagnostic aids.

make/break key. A key that, when pressed and released, generates a scan code.

mandatory fill. An information field that must be completely filled to be correct.

MAP. Maintenance analysis procedure.

MDT. Modified data tag.

mem. Memory.

mem req. Memory request.

menu. A list of options that can be selected to request work station tests.

MHz. Megahertz.

MI. Mode indicate.

MIC. Mode indicate common.

microprocessing. An operation of the MPU.

microprocessing unit (MPU). A processing unit that is microprogram-controlled and performs internal machine operations. The MPU receives data, controls the display of data, and controls the flow of information to and from the controller.

microprogram. A program that uses microinstructions to carry out system operations.

microseconds per division (us/div). A setting on the oscilloscope.

microwave. An electromagnetic wave in the radio-frequency range of 300 to 30,000 megahertz.

milliseconds per division (ms/div). A setting on the oscilloscope.

mm. Millimeter.

modem. See data communication equipment.

MPU. Microprocessing unit.

ms. Millisecond.

ms/div. Milliseconds per division.

MSR. Magnetic stripe reader.

multiframe response. More than one frame or multiple frames of data that are transmitted.

multiplexer. A device for handling multiple signals over a signal line.

N/C. Pertains to a switch setting; normally closed.

N/O. Pertains to a switch setting; normally open.

NDM. Normal disconnect mode.

nonsynchronous modem. A modem that does not supply clock signals and that require clocking from the attaching device.

Nr count. The sequence number of the next expected Ns field of the next I-frame received.

NRM. Normal response mode.

NRZ. Non-return-to-zero recording.

NRZI. Non-return-to-zero change on zeros recording.

Ns count. The number of sequence frames in SDLC that have been sent.

null. A character of all zeros that has a position in the buffer and is displayed as a blank.

off-hook. A telephone set in use.

on-hook. A telephone set not in use.

options. The selections on a display screen menu for test requests.

OS. Outstanding status.

P-P. Peak-to-peak.

pacing. A method by which a receiving station controls the rate of transmissions of a sending station to prevent overrun.

P/F. Poll bit for primary station; final frame bit for secondary station.

PC. Printed circuit.

physical unit (PU). An SNA term for the secondary station (the work station controller).

PIU. Path information unit.

planar. The basic printed circuit electronic board.

PLE. Permanent link error.

poll. The method a primary station (host system) or a secondary station (work station controller) uses to request other work stations to transmit or receive data.

POR. Power on reset.

port. The hardware connection used to attach the work stations to the work station controller.

Post Telephone and Telegraph Administration (PTT). Government-operated common carriers in countries outside the United States.

protocol. The rules used as a common base for functions of different users.

PSH. Physical services header.

PSN. Public switched network.

PTT. Post Telephone and Telegraph Administration.

PU. Physical unit.

PVC. Permanent virtual circuit.

RAM. Random access memory (storage).

rcvd. Received.

rcvr. Receiver.

read-only storage (ROS). Storage containing instructions and data that can be read but not changed.

read/write storage (R/W). Storage, usually used for data, that can be both written and read.

RECFMS. Record formatted maintenance statistics.

ref. Reference.

register. A storage device or circuit that stores those limited parts of data needed for executing input/output storage, processing, and control operations.

req. Request.

REQMS. Request maintenance statistics.

REQTEST. Request test procedure.

retry. To send frames of information a number of times by the controller until the frames are accepted by the display station without an error.

RFS. Ready for sending (also known as CTS).

RH. Request/response header.

RI. Ring indicator.

ripple level. A voltage measurement.

RLSD. Received line signal detector.

RMS. Root-mean-square.

RNR. Receive not ready.

ROL. Request online.

root-mean-squared (RMS). Indicates the effective value of an AC voltage.

ROS. Read-only storage.

RR. Receive ready.

RSET. Received signal element timing (receiver clock).

RSHUTD. Request shutdown.

rsp. Response.

rt. Right.

rt adj B fill. Right adjust blank fill.

RTS. Request to send.

RU. Request/response unit.

SA. Station address.

SABM. Set asynchronous balanced mode.

SDLC. Synchronous data link control.

segmenting. In SNA, the dividing of a basic information unit (BIU) into two or more path information units (PIU).

sel. Select.

serdes. Serializer/deserializer.

serializer/deserializer (serdes). A register that is used to send data from the display station to the controller, one bit at a time. The data is entered serially and read out parallel, or it is entered parallel and read out serially.

session. The period of time during which programs or devices can communicate with each other; the time that starts when an operator signs on the system and ends when the operator signs off the system.

SET. Signal element timing.

sign-on. The procedure performed at a display station that can include entering the sign-on command, a password, or other specified security information.

SLT. Solid logic technology.

SNA. Systems network architecture.

SNBU. Switched network backup.

SNRM. Set normal response mode.

SOM. Start of message.

square wave. The rectangular waveform that varies periodically and abruptly from one to the other of two uniform values.

SRC. System reference code.

SS. System services.

stat addr. Station address.

stiffener. A frame for supporting the planar.

subscription. An agreement between a user and a PTT/network supplier for the use of certain network services and optional facilities.

SVC. Switched virtual circuit.

switched network backup (SNBU). A nonswitched network modem feature that provides an alternate or standby interface to a switched communications facility.

sync. Synchronization. Two or more events occurring at the same time.

synchronous modem. A modem that supplies the clock signals that control the transfer of data between the work station controller and the modem. Contrast with *nonsynchronous modem*.

sys. System.

system reference code (SRC). A system-generated code, either 4 or 6 digits, indicating an error or condition. This code is displayable on any attached display station.

TAC. Transmit activity check.

TB. Terminal block.

TD. Transmitted data.

TDR. Time domain reflectometry.

TH. Transmission header.

theory. A section of this manual that includes data flow, functional units, and features.

threshold (receive levels). A specific voltage level that is compared to a signal in order to determine whether that signal is active or inactive.

time-out. A time interval allotted for certain actions to occur (such as response to a poll command) before corrective action is taken.

transmit activity check. An error condition detected by the work station adapter on the controller planar when the data transmitted to the twinaxial line does not match the output from the work station adapter.

transition. A point in time when a voltage or signal change occurs between two specified levels.

transmission coding. NRZI or NRZ.

TS. Transmission subsystem.

TSET. Transmitted signal element timing (transmit clock).

twinaxial cable. A twisted-pair shielded cable that connects a display station or printer to a controller.

UA. Unnumbered acknowledgment.

US. United States.

underscore. An attribute of a display field that places a line under all positions of the field.

USOC. Universal service order code.

V. Volts.

Vac. Volts alternating current.

Vdc. Volts direct current.

work station. A device that transmits information to or receives information from a computer or both, as needed to perform a job; for example, a display station or a printer.

WT. World Trade.

XLCA. X.21 line communication adapter.

XID. Exchange station identification.

xmit. Transmit.

Legend

The following symbols are used in flowcharts and figures throughout this manual.

Display Screen

Start and End of Flowchart

Off-Page Connector

On-Page Connector

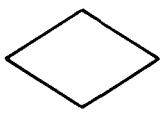

Decision Block

Comment Block

Information Block

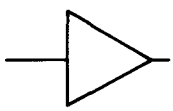

Logic (indicates signal direction)

Driver

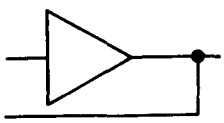

Logic

Driver/Receiver

Zener Diode

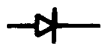

Diode

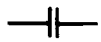

Capacitor

Ground

Frame Ground (safety)

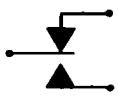

Normally Closed (N/C) Contact

Resistor

Jumper

Light-Emitting Diode (LED)

Switch

Fuse

Connector

Index

A

AC cable assembly removal and replacement 1-13
AC distribution 1-8
  control panel 1-16
  rate select switch 1-16
  test switch 1-16
active state 3-36
address description 3-29

B

badge reader (see magnetic stripe reader) 4-7
battery-powered RAM description 3-2
bind request description 3-37
bind response description 3-38

C

cable signal quality check 1-161
carrier detect line 1-78
  description 1-78
carrier detect line (see received line signal detector) 1-72
CE/CSR tests, dedicated mode 1-98
  communication cable wrap test 1-102
  communication card test 1-102
  concurrent mode 1-107
  concurrent mode display screens 1-110
  concurrent mode test screens 1-110
  configuration data display, online 1-122
  continuous loop mode 1-98
  continuous receive data test 1-103
  continuous transmit test 1-103
  dedicated mode 1-98
  dedicated mode description 1-98
  dedicated mode display screen 1-99
  dedicated test descriptions 1-102
  description 1-98
  display attributes test 1-119
  display verification tests 1-119
  displayable characters test 1-120, 1-121
  ERAP display 1-122
  ERAP screen description 1-158
  external modem/DCE test 1-102
  function keys and features test 1-122
  line activate test 1-102
  line deactivate test 1-103
  line interface test 1-102
  line speed test 1-103
  link tests 1-123
  loop on error mode 1-98
  LPDA local modem self-test 1-103
  online tests 1-117
  procedure, concurrent mode 1-109
  procedure, dedicated mode 1-98
  remote modem/DCE test 1-102
  self check feature tests 1-121
  service aids 1-161
  switch from dedicated mode to concurrent mode 1-105
character handling description 3-4
character hexadecimal codes 4-4
character set description, multinational feature 4-4
characters description 1-75
clear to send line 1-51
  description 1-72, 1-78, 1-79
  wiring 1-71
  wiring and wrap diagram 1-51, 1-55, 1-57
clock sync check 1-65
codes (see system reference codes) 1-127
codes, language ID 1-30
Com Line Sync LED 1-18
  description 1-18
command/function error codes 1-139
commands and responses 3-31
communication 1-23
  active state 3-36
  card removal and replacement 1-66
  carrier detect line description 1-78
  clear to send line description 1-78
  clock sync check 1-65
  communication adapter description 3-2
  communication features descriptions 4-1
  communication lines 1-50
  communication switches 1-24
  communication switches descriptions 1-25, 1-32
  concurrent mode 1-107
  concurrent mode test description 1-107
  concurrent mode test screens 1-110
  config. setup form 1-34
  configuration procedures 1-23
  continuity check line 1-168
  control field description, SDLC 3-30
  C1, C2, C3 tests 1-107

dB-to-volts conversion 1-69
DDSA communication lines 1-55
DDSA feature description 4-2
DDSA interface information 1-74
DDSA jumpers 1-67
diagnostic error codes 1-153
disconnect (DISC) 3-34
disconnect state 3-36
disconnected mode (DM) 3-34
EIA communication lines 1-51, 1-71
EIA feature description 4-2
EIA jumpers 1-67
EIA signal line descriptions 1-72
EIA/CCITT interface information 1-70
ending flag (SDLC) description 3-30
error codes, diagnostic 1-153
exchange station identification (XID) 3-34
extended cluster feature 4-2
feature information 1-50
frame check sequence 3-30
HDLC commands and responses 3-6
idle state 3-36
information field description 3-30
internal communication cable removal and replacement 1-66
link tests, online 1-123
normal disconnect mode (NDM) 3-36
normal response mode (NRM) 3-36
NR/NS count description 3-28
NRZI description 3-28
ports interface description 3-1
receive not ready (RNR) 3-33
receive ready (RR) 3-33
request to send line description 1-78
SDLC commands and responses 3-31
SDLC config. screen 1-25
SDLC control field format 3-33
SDLC description 3-27
SDLC frame format 3-29
SDLC frame reject (FRMR) response 3-34
SDLC information commands/responses 3-32
SDLC information transfer format 3-33
SDLC response modes 3-36
SDLC supervisory commands/responses 3-32
SDLC supervisory format (control field) 3-33
SDLC test command/response 3-34
SDLC transmissions 3-28
SDLC unnumbered commands 3-32
SDLC unnumbered format control field 3-34
sequenced frames transmission 3-28
set normal response mode (SNRM) 3-34
SNA bind request description 3-37
SNA bind response description 3-38
SNA description 3-37
SNA information field 3-39
SNA request/response header 3-41
SNA session flow 3-43
SNA transmission header 3-40
SNA work station controller support 3-37
starting flag description 3-29
station address description 3-29
transient state 3-36
turnaround delay 3-36
unnumbered acknowledgment (UA) 3-34
unnumbered commands SDLC description 3-32
work station controller description 3-1
wrap descriptions 1-61
X.21 switched support communications protocol description 3-44
X.21 switched support feature description 4-3
X.25 feature description 4-3
XCLA communication lines 1-57
XLCA feature description 4-2
XLCA interface information 1-79
XLCA jumpers 1-68
XLCA signal line descriptions 1-79
zero bit insertion/deletion 3-27
communication adapter description 3-2
communication cable (internal) 1-66
removal and replacement 1-66
communication cable wrap test 1-102
communication card test 1-102
communication error codes (X.25) 1-144
compatibility, 5294 to 5251 Model 12 3-1
concurrent mode description 1-107
concurrent mode test procedure 1-109
concurrent mode test screens 1-110
concurrent mode, switch to/from dedicated mode 1-105
configuration 1-23
communication switches descriptions 1-32
language ID 1-30
procedures 1-23
SDLC config. screen 1-24
setup form 1-34
X.25 config. screen 1-26
configuration data display, online 1-122
connect data set to line 1-72
description 1-72
connect data set to line wiring 1-71
continuity check line 1-168
continuous receive data test 1-103
continuous transmit test 1-103
control A line wiring 1-57
control B line wiring 1-57
control field (SDLC) description 3-30

control field for information transfer format 3-33
control field for unnumbered format 3-34
control field format (SDLC) 3-33
control panel 1-3, 1-16
controller functional description 3-2
copy-to-printer feature description 4-7
counters, SDLC and statistical 1-125
country ID (language) 1-30
covers 1-3
  front, control panel 1-3
CTS delay jumpers 1-68
customer configuration 1-23
  description 1-24
  how to display and change 1-23
  language ID 1-30
  screen, SDLC 1-24
  setup form 1-34
  setup screen 1-24
  X.25 config. screen 1-26
customer configuration procedures 1-23
customer setup form 1-34
C1 screen 1-110
C1, C2, C3 test and description 1-107
C2 screen 1-114
C3 screen 1-116

D

data flow description 3-4
data set ready line 1-51
  description 1-72, 1-79
  wiring 1-71
  wiring and wrap diagram 1-51, 1-55, 1-57
data signal rate select line 1-72
  description 1-72
data terminal ready line 1-51
  description 1-72, 1-80
  wiring 1-71
  wiring and wrap diagram 1-51, 1-57
dB-to-volts conversion 1-69
DC power distribution 1-9
DC ripple level check 1-11
DC voltage level 1-10
  (see also CE/CSR tests) 1-98
  cable signal quality 1-161
  clock sync check 1-65
  DC ripple level 1-11
  dedicated mode 1-98
DC voltage level checks 1-10
DDSA feature 1-67
  carrier detect line description 1-78
  characters description 1-75
  clear to send line description 1-78
  communication adapter description 3-2
  DDSA interface information 1-74
  description 4-2
  jumpers 1-67
  out-of-service characters description 1-77
  request to send line description 1-78
  signal line descriptions 1-78
  transmission signal description 1-74
  transmit levels 1-78
  wrap diagram 1-55
  zero suppression characters description 1-76
DDSA feature description 4-2
DDSA signal line descriptions 1-78
DDSA transmit levels 1-78
dedicated mode 1-98
dedicated mode display screen 1-99
dedicated mode flowchart 1-100
dedicated mode, test description 1-98
dedicated test descriptions 1-102
diagnostics 1-84
  (see also checks) 1-84
  CE/CSR test setup 1-84
  CE/CSR tests, dedicated mode 1-98
  communication diagnostic error codes 1-153
  concurrent mode 1-107
  concurrent mode display screens 1-110
  configuration data display, online 1-122
  continuous loop mode 1-98
  dedicated mode 1-98
  dedicated mode description 1-98
  dedicated mode display screen 1-99
  dedicated test descriptions 1-102
  display attributes test 1-119
  display verification tests 1-119
  displayable characters test 1-120, 1-121
  ERAP display 1-122
  ERAP screen description 1-158
  flowchart 1-84
  function keys and features test 1-122
  link tests 1-123
  loop on error mode 1-98
  online tests 1-117
  online tests summary 1-118
  power-on 1-93
  power-on diag. error codes 1-155
  self check feature tests 1-121
  summary 1-85
  switch from dedicated mode to concurrent mode 1-105
disconnect (DISC) description 3-34
disconnect state 3-36

disconnected mode (DM) 3-34
display attributes test, online 1-119
display station logged error codes 1-138
display stations supported by the work station controller 3-1
display verification test, online 1-119
displayable characters test 1-120

E

EIA feature 1-67
  communication adapter description 3-2
  description 4-2
  EIA signal line descriptions 1-72
  EIA/CCITT interface information 1-70
  EIA/CCITT interface lines between DTE and DCE 1-71
  jumpers 1-67
  transmit levels 1-70
  wrap diagram 1-51
EIA/CCITT feature description 4-2
ELLC 3-20
ending flag (SDLC) description 3-30
Enhanced Keyboard feature 4-1
enhanced logical link control (ELLC) 3-20
ERAP (error recording analysis procedure) screen 1-122
ERAP screen description 1-158
error code summary table 1-128
error codes 1-40
  (see also system reference codes) 1-127
  command/function error codes 1-139
  communication diagnostic error codes 1-153
  DDSA error codes 1-55
  description 1-127
  EIA error codes 1-51
  ERAP display, online 1-122
  ERAP screen description 1-158
  keyboard error codes 1-139
  line/interface error codes 1-138
  operator error codes 1-130
  power-on diagnostics error codes 1-155
  printer error codes 1-141
  summary table 1-128
  time-out error codes 1-139
  work station controller error codes 1-132, 1-136
  X.21 switched support communications error codes 1-149
  X.25 communications error codes 1-144
  X.25 operator error codes 1-142
  XLCA error codes 1-57
error counters description 1-125
error indicate line 1-80
  description 1-80
exchange station identification (XID) 3-34
Expanded Function Feature ROS module location 1-46
extended cluster feature 4-2
external modem/DCE test 1-102

F

fan assembly 1-14
  fan assembly removal and replacement 1-14
feature
  card removal and replacement 1-66
  communication adapter description 3-2
  communication feature information 1-50
  copy-to-printer feature description 4-7
  DDSA communication lines 1-55
  DDSA feature description 4-2
  DDSA interface information 1-74
  DDSA jumpers 1-67
  EIA communication lines 1-51, 1-71
  EIA feature description 4-2
  EIA jumpers 1-67
  EIA/CCITT interface information 1-70
  extended cluster feature 4-2
  extended function a feature description 4-10
  feature card locations 1-46
  feature ROS module locations 1-46
  magnetic stripe reader (MSR) 4-7
  multinational character set feature description 4-4
  selector light pen support description 4-8
  self-check feature description 4-8
  text entry assist feature description 4-10
  X.21 switched support feature description 4-3
  X.25 feature description 4-3
  XCLA communication lines 1-57
  XLCA communication lines 1-57
  XLCA feature description 4-2
  XLCA interface information 1-79
  XLCA jumpers 1-68
feature ROS module locations 1-46
features 4-1
flowchart, dedicated mode 1-100
frame check sequence (SDLC) description 3-30
frame reject (FRMR) 3-34
free key operation 1-97
function error codes 1-139
function keys and features test, online 1-122

functional description, work station controller 3-2

G

general logic probe 2-3
ground circuits 1-15
grounds 1-15
  DDSA signal ground line 1-55
  EIA signal ground line 1-51, 1-71
  ground circuits 1-15
  XLCA signal ground line 1-57

H

HDLC commands and responses 3-6
HDLC control field formats 3-8
HDLC theory 3-4
hex key functional description 4-4
hexadecimal character codes 4-4

I

I/O panel 1-36
idle state 3-36
indicator A line wiring 1-57
indicator B line wiring 1-57
indicators, LEDs 1-16
information commands/responses (SDLC) 3-32
information field (SDLC) description 3-30
information field (SNA) 3-39
information transfer format 3-33
integrated logic probe 2-3
interface/ports description 3-1
internal AC cable removal and replacement 1-13
  internal communication cable removal and replacement 1-66
  LEDs cable 1-16
  signal quality check 1-161

J

jumpers 1-67
  CTS delay 1-68
  DDSA jumpers 1-67
  EIA jumpers 1-67
  XLCA jumpers 1-68

K

keyboard error codes 1-139

L

language ID codes 1-30
leading pad format 3-29
LEDs 1-16
  description 1-18
  locations 1-16
  removal and replacement 1-17
LEDs problem determination 1-18
  LEDs PDP table 1-18
light pen feature (see selector light pen) 4-8
line activate test 1-102
line continuity test 1-168
line deactivate test 1-103
line interface error codes 1-138
line interface test 1-102
line polarity reversal test 1-168
line speed test 1-103
link tests, online 1-123
LLC 3-20
local modem self-test 1-103
local stations configuration display 1-122
locations 1-3, 1-5, 1-16
  feature ROS card 1-46
  general 1-3
  I/O panel 1-5
  logic board 1-42
  logic board (bottom view) 1-43
  logic board probing 1-43
  logic card 1-42
  logic card probing 1-43
  logic cards 1-6
  planar 1-6
  ports 1-5
  power supply 1-7

twinaxial cable assembly removal and replacement 1-41
logic board 1-42
logic card locations 1-42
probing locations 1-43
removal and replacement 1-44
logic cards 1-6
feature ROS card 1-46
locations 1-6
removal and replacement 1-66
logic probe description 2-3
logical link control (LLC) 3-4, 3-20
LPDA local modem self-test 1-103

M

magnetic stripe reader (MSR) support 4-7
messages (see system reference codes) 1-127
module locations, feature 1-46
modulus 10 and 11 description 4-8
modulus 10 and 11 self check tests 1-121
MSR (see magnetic stripe reader) 4-7
multinational character set feature description 4-4

N

new sync line 1-73
description 1-73
wiring 1-71
wiring and wrap diagram 1-51
non-return-to-zero (NRZI) description 3-28
normal disconnect mode (NDM) 3-36
normal response mode (NRM) 3-36
NR/NS count description 3-28
NRZI description 3-28

O

online test request 1-86
online tests 1-117
configuration data display 1-122
display attributes test 1-119
display verification test 1-119
displayable characters test 1-120
ERAP display 1-122
ERAP screen description 1-158
function keys and feature test 1-122
link tests 1-123
online tests description 1-117
self check feature tests (modulus 10 and 11) 1-121
specified input fields test 1-121
summary 1-118
online tests summary 1-118
open cable check 1-164
operator error codes 1-130
operator error codes (X.21) 1-149
operator error codes (X.25) 1-142
out-of-service characters description 1-77

P

packet level description 3-11
panel 1-3
control 1-3, 1-16
control panel wiring 1-16
I/O 1-5, 1-36
LEDs and test switch descriptions 1-18
locations (inside view) 1-36
locations, control (inside) 1-16
ports 1-36
wiring 1-36
parts catalog 5-1
planar 1-6
config. procedures 1-23
functional description 3-2
locations 1-6, 1-21
removal and replacement 1-22
test points 1-21
polarity reversal test 1-168
POR distribution 1-9
ports interface description 3-1
power-on diagnostics 1-93
description 1-93
power-on diagnostics error codes 1-155
power supply 1-7
AC distribution 1-8
AC frequency specifications 1-8
ACV specifications 1-8
DC power distribution 1-9
DC ripple level check 1-11
DC voltage level check 1-10
DDSA signal ground line 1-55, 1-57
EIA signal ground line 1-51, 1-71
error codes, DDSA 1-55
error codes, EIA 1-51
error codes, XLCA 1-57
ground circuits 1-15

internal AC cable removal and replacement 1-13
Power LED description 1-18
Power-on reset signal distribution 1-9
primary station description 3-27
printer error codes 1-141
printers supported by the work station controller 3-1
probes (see tools and test equipment) 2-3

Q

QLLC 3-20
qualified logical link control (QLLC) 3-20

R

RAM modules description 3-2
rate select switch 1-16
description 1-18
location 1-16
removal and replacement 1-17
wiring 1-16, 1-71
wiring and wrap diagram 1-51
Ready LED 1-18
description 1-18
receive clock 1-55
wiring and wrap diagram 1-55, 1-57
receive data test (continuous) 1-103
receive line A 1-55
wiring and wrap diagram 1-55, 1-57
receive line B 1-55
wiring and wrap diagram 1-55, 1-57
receive lines A and B wiring 1-55, 1-57
receive not ready (RNR) 3-33
receive ready (RR) 3-33
received data line 1-72
description 1-72, 1-79
wiring 1-71
wiring and wrap diagram 1-51, 1-55, 1-57
received line signal detector line 1-51
description 1-72
wiring 1-71
wiring and wrap diagram 1-51, 1-55, 1-57
received signal element timing 1-72
description 1-72, 1-79
wiring 1-71
wiring and wrap diagram 1-51
remote modem/DCE test 1-102
remote stations configuration display 1-122
removal and replacement
AC cable (internal) 1-13
communication card 1-66
fan assembly 1-14
feature ROS card 1-47
feature ROS modules 1-47
internal communication cable 1-66
LEDs 1-17
logic board 1-44
planar 1-22
ports 1-41
power supply 1-12
rate select switch 1-17
test switch 1-17
twinaxial cable assembly 1-41
request to send line 1-51
description 1-72, 1-78, 1-79
wiring 1-71
wiring and wrap diagram 1-51, 1-55, 1-57
request/response header (SNA) 3-41
reset 1-9
POR distribution 1-9
response modes 3-36
ring indicator line 1-73
description 1-73
wiring 1-71
wiring and wrap diagram 1-51
ripple level check 1-11
ROS module locations 1-46

S

scan code handling description 3-4
screens 1-24
concurrent mode display screens 1-110
configuration data 1-122
configuration screen, online 1-122
customer configuration 1-24
dedicated mode display screen 1-99
ERAP screen description 1-158
language ID 1-30
online test screens description 1-119
SDLC config. 1-25
X.25 config. 1-26
SDLC 1-25
config. screen 1-25
disconnect command 3-34
SDLC active state 3-36
SDLC commands and responses 3-31
SDLC control field description 3-30
SDLC control field format 3-33
SDLC description 3-27

SDLC disconnect state 3-36
SDLC ending flag description 3-30
SDLC error counters description 1-125
SDLC frame check sequence description 3-30
SDLC frame reject (FRMR) response 3-34
SDLC idle state 3-36
SDLC information commands/responses 3-32
SDLC information field description 3-30
SDLC response modes 3-36
SDLC set normal response mode command 3-34
SDLC supervisory commands/responses 3-32
SDLC supervisory format (control field) 3-33
SDLC test command/response 3-34
SDLC transient state 3-36
SDLC transmissions 3-28
SDLC unnumbered acknowledgment (UA) response 3-34
SDLC unnumbered commands 3-32
select standby line 1-51
  description 1-73
  wiring 1-71
  wiring and wrap diagram 1-51
selector light pen (SLP) support 4-8
self-check feature description 4-8
self check feature test 1-121
sequenced frames transmission 3-28
service aids 1-161
session flow (SNA) 3-43
SET A line wiring 1-57
SET B line wiring 1-57
set normal response mode (SNRM) 3-34
setup 1-23
  communication switches descriptions 1-32
  config. procedures 1-23
  configuration screen 1-23
  form, configuration 1-34
  language ID 1-30
setup configuration screen 1-24
shorted cable check 1-161
signal lines descriptions 1-72
  carrier detect (CD) 1-78
  clear to send (CTS) 1-78
  DDSA 1-78
  EIA signal lines 1-72
  request to send (RTS) 1-78
  XLCA 1-79
signal quality check, cable 1-161
SLP (see selector light pen) 4-8
SNA bind request 3-37
SNA bind response 3-38
SNA information field 3-39
SNA request/response header 3-41
SNA session flow 3-43
SNA transmission header 3-40
specified input fields test 1-121
speed select line (see data signal rate select line) 1-72
starting flag description, SDLC 3-29
station address description 3-29
statistical counters description 1-125
supervisory commands/responses (SDLC) 3-32
supervisory format for SDLC control field 3-33
supported work stations 3-1
suppression characters description 1-76
switches 1-16
  communication switches 1-24
  communication switches descriptions 1-32
  descriptions 1-18
  locations 1-16
  rate select switch 1-16
  removal and replacement 1-17
  switch from dedicated mode to concurrent mode 1-105
  wiring 1-16
system reference codes 1-127
  code summary table 1-128
  command/function error codes 1-139
  communication diagnostic error codes 1-153
  DDSA error codes 1-55
  description 1-127
  display station logged error codes 1-138
  EIA error codes 1-51
  keyboard error codes 1-139
  line/interface error codes 1-138
  operator error codes 1-130
  power-on diag. error codes 1-155
  printer error codes 1-141
  screen format 1-127
  time-out error codes 1-139
  work station controller error codes 1-132, 1-136
  X.21 switched support communications error codes 1-149
  X.25 communication error codes 1-144
  X.25 operator error codes 1-142
  XLCA error codes 1-57
Systems Network Architecture (SNA) 3-37
  commands and responses 3-37
  work station controller support 3-37

T

test command/response (SDLC) 3-34
test control 1 line 1-51
  description 1-73, 1-79
  wiring 1-71
  wiring and wrap diagram 1-51, 1-55, 1-57
test control 2 line 1-51, 1-73
  description 1-73, 1-79
  wiring 1-71
  wiring and wrap diagram 1-51
test equipment 2-1
test indicate line 1-51
  description 1-73, 1-80
  wiring 1-71
  wiring and wrap diagram 1-51, 1-55, 1-57
test points 1-21
  DDSA signal lines 1-55
  EIA signal lines 1-51, 1-71
  planar 1-21
test request 1-86
test request selection 1-86
test switch 1-16
  description 1-18
  location 1-16
  removal and replacement 1-17
  wiring 1-16
test, line continuity 1-168
test, polarity reversal 1-168
tests (see diagnostics) 1-84
theory 3-1
  active state 3-36
  battery-powered RAM description 3-2
  bind request description 3-37
  bind response description 3-38
  communication adapter description 3-2
  control field description, SDLC 3-30
  control field format 3-33
  data flow 3-4
  disconnect (DISC) 3-34
  disconnect state 3-36
  disconnected mode (DM) 3-34
  ending flag description 3-30
  exchange station identification (XID) 3-34
  features descriptions (see Features) 4-1
  frame check sequence 3-30
  functional description 3-2
  HDLC description 3-4
  idle state 3-36
  information field description 3-30
  interface requirements/restrictions 3-1
  normal disconnect mode (NDM) 3-36
  normal response mode (NRM) 3-36
  NR/NS count description 3-28
  NRZI description 3-28
  planar description 3-2
  ports description 3-1
  primary/secondary stations description 3-27
  RAM modules description 3-2
  receive not ready (RNR) 3-33
  receive ready (RR) 3-33
  SDLC commands and responses 3-31
  SDLC description 3-27
  SDLC frame format 3-29
  SDLC frame reject (FRMR) response 3-34
  SDLC information commands/responses 3-32
  SDLC information transfer format 3-33
  SDLC leading pad 3-29
  SDLC response modes 3-36
  SDLC supervisory commands/responses 3-32
  SDLC supervisory format (control field) 3-33
  SDLC test command/response 3-34
  SDLC transmissions 3-28
  SDLC unnumbered format control field 3-34
  sequenced frames transmission 3-28
  set normal response mode (SNRM) 3-34
  SNA commands and responses 3-37
  SNA description 3-37
  SNA information field 3-39
  SNA request/response header 3-41
  SNA session flow 3-43
  SNA transmission header 3-40
  SNA work station controller support 3-37
  starting flag description 3-29
  station address description 3-29
  supported work stations 3-1
  transient state 3-36
  turnaround delay 3-36
  unnumbered acknowledgment (UA) 3-34
  unnumbered commands 3-32
  work station controller description 3-1
  X.21 switched communications protocol 3-44
  X.25 communications protocols 3-4
  zero bit insertion/deletion 3-27
  5294 to 5251 Model 12 compatibility 3-1
time-out error codes 1-139
tools and test equipment 2-1
transient state 3-36
transmission header (SNA) 3-40
transmission signal description 1-74
transmit clock 1-55
  wiring and wrap diagram 1-55, 1-57
transmit levels 1-78
  DDSA 1-78
  EIA 1-70

transmit line A 1-55
wiring and wrap diagram 1-55, 1-57
transmit line B 1-55
wiring and wrap diagram 1-55, 1-57
transmit lines A and B wiring 1-55, 1-57
transmitted data line 1-72
description 1-72, 1-79
wiring 1-71
wiring and wrap diagram 1-51, 1-55, 1-57
transmitted signal element timing 1-72
description 1-72, 1-79
wiring 1-71
wiring and wrap diagram 1-51
turnaround delay 3-36
twinax interface check 1-169
twinaxial ports 1-36
error codes 1-40, 1-156
locations 1-36
removal and replacement 1-41
wiring 1-36

U

unnumbered (SDLC) commands 3-32
unnumbered acknowledgment (UA) 3-34
unnumbered commands 3-32
unnumbered format control field 3-34

V

view 1-3
front 1-3
I/O panel 1-4
top 1-4

W

wand (see selector light pen) 4-8
work station controller description 3-1
work station controller error codes 1-132, 1-136
work station controller functional description 3-2
work station controller setup form 1-34
work station controller SNA support 3-37
work stations supported by the work station controller 3-1
Workstation Active LED 1-18
description 1-18
wrap 1-61
DDSA lines 1-55
descriptions 1-62
EIA lines 1-51
how to use 1-62
wiring diagram 1-51, 1-55, 1-57
XLCA lines 1-57
wrap 2 control diagram 1-51

X

X.21 switched support communications error codes 1-149
X.21 switched support communications feature description 4-3
X.21 switched support communications feature ROS module 1-46
X.21 switched support communications protocol description 3-44
X.25 communication error codes 1-144
X.25 config. screen 1-26
X.25 feature description 4-3
X.25 operator error codes 1-142
X.25 packet level description 3-11
X.25 protocols description 3-4
X.25 ROS module locations 1-46
XID (exchange station identification) 3-34
XLCA feature 1-68
card application 1-80
communication adapter description 3-2
description 4-2
interface lines 1-79
jumpers 1-68
signal line descriptions 1-79
transmit levels 1-79
wrap diagram 1-57
XLCA feature description 4-2

Z

zero bit insertion/deletion 3-27

IBM 5294
Control Unit
Maintenance Library

READER'S COMMENT FORM

Maintenance Information
Parts Catalog
I/PAR Code Guide
CE/CSR Log

Publication No. SY31-0653-5

This manual is part of a library that serves as a reference source for systems analysts, programmers, and operators of IBM systems. You may use this form to communicate your comments about this publication, its organization, or subject matter, with the understanding that IBM may use or distribute whatever information you supply in any way it believes appropriate without incurring any obligation to you.

Note: Copies of IBM publications are not stocked at the location to which this form is addressed. Please direct any requests for copies of publications, or for assistance in using your IBM system, to your IBM representative or to the IBM branch office serving your locality.

Possible topics for comment are:

Clarity Accuracy Completeness Organization Coding Retrieval Legibility

If you wish a reply, give your name, company, mailing address, and date:

_____

_____

_____

_____

What is your occupation? _____

Number of latest Newsletter associated with this publication: _____

Thank you for your cooperation. No postage stamp necessary if mailed in the U.S.A. (Elsewhere, an IBM office or representative will be happy to forward your comments or you may mail directly to the address in the Edition Notice on the back of the title page.)

SY31-0653-5

Reader's Comment Form

Fold and Tape | Please Do Not Staple | Fold and Tape

NO POSTAGE
NECESSARY
IF MAILED
IN THE
UNITED STATES

BUSINESS REPLY MAIL

FIRST CLASS PERMIT NO. 40 ARMONK, N.Y.

POSTAGE WILL BE PAID BY ADDRESSEE:

International Business Machines Corporation
Department E02
P.O. Box 12195
Research Triangle Park, N.C. 27709-2195

Fold and Tape | Please Do Not Staple | Fold and Tape

IBM®

IBM 5294
Control Unit
Maintenance Library

READER'S COMMENT FORM

Maintenance Information
Parts Catalog
I/PAR Code Guide
CE/CSR Log

Publication No. SY31-0653-5

This manual is part of a library that serves as a reference source for systems analysts, programmers, and operators of IBM systems. You may use this form to communicate your comments about this publication, its organization, or subject matter, with the understanding that IBM may use or distribute whatever information you supply in any way it believes appropriate without incurring any obligation to you.

Note: Copies of IBM publications are not stocked at the location to which this form is addressed. Please direct any requests for copies of publications, or for assistance in using your IBM system, to your IBM representative or to the IBM branch office serving your locality.

Possible topics for comment are:

Clarity Accuracy Completeness Organization Coding Retrieval Legibility

If you wish a reply, give your name, company, mailing address, and date:

_____

_____

_____

_____

What is your occupation? _____

Number of latest Newsletter associated with this publication: _____

Thank you for your cooperation. No postage stamp necessary if mailed in the U.S.A. (Elsewhere, an IBM office or representative will be happy to forward your comments or you may mail directly to the address in the Edition Notice on the back of the title page.)

SY31-0653-5

Reader's Comment Form

Fold and Tape | Please Do Not Staple | Fold and Tape

NO POSTAGE
NECESSARY
IF MAILED
IN THE
UNITED STATES

BUSINESS REPLY MAIL

FIRST CLASS PERMIT NO. 40 ARMONK, N.Y.

POSTAGE WILL BE PAID BY ADDRESSEE:

International Business Machines Corporation
Department E02
P.O. Box 12195
Research Triangle Park, N.C. 27709-2195

Fold and Tape | Please Do Not Staple | Fold and Tape

IBM®

IBM 5294
Control Unit
Maintenance Library

READER'S COMMENT FORM

Maintenance Information
Parts Catalog
I/PAR Code Guide
CE/CSR Log

Publication No. SY31-0653-5

This manual is part of a library that serves as a reference source for systems analysts, programmers, and operators of IBM systems. You may use this form to communicate your comments about this publication, its organization, or subject matter, with the understanding that IBM may use or distribute whatever information you supply in any way it believes appropriate without incurring any obligation to you.

Note: Copies of IBM publications are not stocked at the location to which this form is addressed. Please direct any requests for copies of publications, or for assistance in using your IBM system, to your IBM representative or to the IBM branch office serving your locality.

Possible topics for comment are:

Clarity Accuracy Completeness Organization Coding Retrieval Legibility

If you wish a reply, give your name, company, mailing address, and date:

_____

_____

_____

_____

What is your occupation? _____

Number of latest Newsletter associated with this publication: _____

Thank you for your cooperation. No postage stamp necessary if mailed in the U.S.A. (Elsewhere, an IBM office or representative will be happy to forward your comments or you may mail directly to the address in the Edition Notice on the back of the title page.)

SY31-0653-5

Reader's Comment Form

Fold and Tape | Please Do Not Staple | Fold and Tape

NO POSTAGE
NECESSARY
IF MAILED
IN THE
UNITED STATES

BUSINESS REPLY MAIL

FIRST CLASS PERMIT NO. 40 ARMONK, N.Y.

POSTAGE WILL BE PAID BY ADDRESSEE:

International Business Machines Corporation
Department E02
P.O. Box 12195
Research Triangle Park, N.C. 27709-2195

Fold and Tape | Please Do Not Staple | Fold and Tape

IBM®

IBM / Technical Newsletter

This Newsletter No.	SY27-1313
Date	18 December 1987
Base Publication No.	SY31-0653-5
File No.	
Prerequisite Newsletters	None

IBM 5294 Control Unit Maintenance Library
Maintenance Information
Parts Catalog
I/PAR Code Guide
CE/CSR Log

© IBM Corp. 1985, 1987

This technical newsletter provides replacement pages for the subject publication. Pages to be inserted and/or removed are:

1-21, 1-22	5-9, 5-10
1-49, 1-50	5-15, 5-16
5-3, 5-4	

Changes to text and illustrations are indicated by a vertical line to the left of the change.

Summary of Amendments

This technical newsletter provides additions related to the IBM 5294 Models K01 and S01.

Note: *Please file this cover letter at the back of the manual to provide a record of changes.*

IBM Corporation, Information Development, Department E02, Raleigh, North Carolina 27709

© IBM Corp. 1987

Printed in U.S.A.

SY31-0653-5

Printed in USA
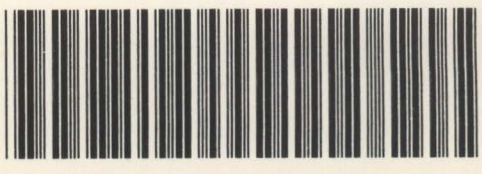
SY31-0653-05