IBM

Large Systems Technical Support

Technical Bulletin

NJE Installation, Operation and Use with JES2 and Other Systems

J. M. Hutchinson

National Technical Support
Washington Systems Center

GG22-9339-00
June 1987

Washington Systems Center
Gaithersburg, MD
Technical Bulletin

NJE Installation, Operation and Use with JES2 and Other Systems

John M. Hutchinson

GG22-9339-00
June, 1987

The information contained in this document has not been submitted to any formal IBM test and is distributed on an "as is" basis **without any warranty either expressed or implied**. The use of this information or the implementation of any of these techniques is a customer responsibility and depends on the customer's ability to evaluate and integrate them into the customer's operational environment. While each item may have been reviewed by IBM for accuracy in a specific situation, there is no guarantee that the same or similar results will be obtained elsewhere. Customers attempting to adapt these techniques to their own environments do so at their own risk.

In this document, any references made to an IBM licensed program are not intended to state or imply that only IBM's licensed program may be used; any functionally equivalent program may be used instead.

It is possible that this material may contain reference to, or information about, IBM products (machines and programs), programming, or services that are not announced in your country. Such references or information must not be construed to mean that IBM intends to announce such IBM products, programming, or services in your country.

Publications are not stocked at the address given below; requests for IBM publications should be made to your IBM representative or to the IBM branch office serving your locality.

A form for reader's comments is provided at the back of this publication. If the form has been removed, comments may be addressed to: ISG Washington Systems Center, IBM Corporation, 18100 Frederick Pike, Gaithersburg, MD 20879.

IBM may use or distribute any of the information you supply in any way it believes appropriate without incurring any obligation whatever. You may, of course, continue to use the information you supply.

© Copyright International Business Machines Corporation 1987

Preface

This manual describes how to install, operate and use an NJE (Network Job Entry) network. It is written primarily for the systems programmer, but also has material for NJE operators and users. While oriented towards JES2, connections with JES3, RSCS and POWER are also discussed.

This is not intended to replace, but merely add to existing product documentation. See Appendix C, "Bibliography" for a complete set of references.

Document Organization

This manual is organized into:

Chapter 1, "Introduction." An overview of network job entry (NJE).

Chapter 2, "Systems Programmer's View of NJE." How to design, implement and manage NJE systems and networks.

Chapter 3, "Operator's View of NJE." How to operate NJE systems and networks. .

Chapter 4, "End-User's View of NJE." How to use NJE facilities.

The material for Operations and Use of NJE should be adapted to individual installations before it is given to operators or end-users.

Appendix A, "Sample Networks."

Appendix B, "NJE Flashes."

Appendix C, "Bibliography."

Appendix D, "Glossary."

"Index."

Prerequisite Publications

See the list of required and related publications in front of Chapters 2, 3 and 4. Also see Appendix C, "Bibliography."

Acknowledgements

This technical bulletin could not have been produced without the help of many individuals. The following people made significant contributions to this document:

Jeff Bassett
Ted Bauer
Joe Buttle
Mike Cox
Charlotte Griffin
Jon Franks
Jerry Hadsell
Pete Hemmingsen
Keith Jones
Austin Kilburn
Mike Laskey
Jim Lynch
Matt McKrell
Don Pizzuto
Thurman Pylant
Walt Schueppen
Doron Shikmoni
Jill Shindelman
Dave Stamper
Jim Williams
Scott Wood

Reader Comments

I plan to update this technical bulletin in the future. Please use the Reader's Comment Form in the back of this publication to report errors, ommissions or any feedback that can improve this document.

Contents

Chapter 1. Introduction **1-1**
Concepts and Terminology 1-1
NJE Products 1-3
Uses of NJE 1-5

Chapter 2. Systems Programmer's View of NJE **2-1**
Network Design 2-3
Network Implementation 2-24
Network Management 2-41

Chapter 3. Operator's View of NJE **3-1**
Network Control 3-3
Job Tracking and Control 3-15
Sending Commands and Messages 3-29
Summary of Operator Commands 3-35

Chapter 4. End-User's View of NJE **4-1**
Job Transmission 4-5
Output Distribution 4-17
Message and Command Transmission 4-31
File Transmission 4-39

Appendix A. Sample Networks **A-1**
BSC Network A-1
SNA Network A-6
Connection in the Same MVS System A-18

Appendix B. NJE Flashes **B-1**
Increasing Throughput between SNA JES2 NJE Nodes B-2
Networking Advanced Function Printing Data B-7
JES2 TP Buffer Size and Virtual Storage Optimization B-12
Submitting Multiple JES2 Jobs from a Single CMS File B-16
NJE Session Initialization B-18
Adding User Sections to NJE Headers (JES2) B-22
Using OS Utilities to Send Bulk Data B-29

Appendix C. Bibliography **C-1**

Appendix D. Glossary **D-1**

Index **X-1**

Figures

1-1. Features Supported by NJE Products 1-4
2-1. Simple Network Topologies 2-4
2-2. SNA NJE Configuration Options 2-5
2-3. Gateway Configuration 2-6
2-4. Back-Bone Network Configuration 2-6
2-5. Parallel SNA NJE Sessions With Multi-Access Spool 2-11
2-6. Parallel NJE Sessions With Multiple LOGONs (ACBs) 2-11
2-7. Elements of NJE Job Turnaround Time 2-45
2-8. Accounting Records for NJE Activities 2-50
2-9. Accounting Information Recorded at each System 2-51
3-1. Transmission Messages by System 3-15
3-2. RSCS Priority Translation 3-19
3-3. POWER Priority Translation 3-19
3-4. Global Commands 3-24
3-5. Unknown Destination Handling 3-28
3-6. Network Management Commands 3-35
3-7. File Control Commands 3-36
3-8. Sending Commands and Messages 3-36
4-1. Job Stream Transmission Format 4-3
4-2. JES2 /*ROUTE XEQ Statement 4-5
4-3. JES2 /*XMIT Statement 4-6
4-4. JES3 Job Example for Transmission 4-12
4-5. CMS Commands for Job Submission 4-14
4-6. Output Fan-Out - JES2 4-20
4-7. CMS Commands for Sending Output 4-22
4-8. Filename, Filetype and Class of RSCS Reader Files 4-30
4-9. Jobstream to Send Commands to JES2 Node 4-33
4-10. Notifications Sent by System 4-37
4-11. Format of "receiving" Command Based on Sending Mechanism . 4-43
4-12. Summary of File Transfer Mechanisms 4-44
B-1. Two sessions between adjacent JES2 SNA NJE nodes B-3
B-2. Operating system levels that support networking of output data .. B-8
B-3. Minimum system levels that support page mode data networking B-10
B-4. Minimum system levels required to support networking of PAGEDEF and FORMDEF names B-11
B-5. Wasted Storage with Sample JES2 TP Buffer Sizes B-13
B-6. A better choice of JES2 TP Buffer Sizes B-13
B-7. Optimum TPDEF BUFSIZE Values B-14
B-8. Logic Flow for Punching Separate Jobs from a CMS File B-16
B-9. XEDIT Macro to Punch Separate Jobs from a CMS File B-17
B-10. SNA Session Initialization (OPNDST ACQ) B-18
B-11. SNA Session Initialization (SIMLOGON) B-19
B-12. Example of Transmitting a PDS B-30

B-13. Example of Receiving a PDS B-31

Chapter 1. Introduction

Concepts and Terminology 1-1
NJE Functions 1-1
NJE Data Types 1-2
NJE Products 1-3
Summary of NJE Features 1-4
Uses of NJE 1-5
Alternatives to NJE 1-6

Concepts and Terminology

Network Job Entry or "NJE" is a facility that provides access to computing facilities from other host systems. It enables users to transfer work and data throughout a distributed network of computing facilities. This bulletin describes the features of IBM products supporting these capabilities and gives some insight into how these products may be combined to support the computing requirements of an enterprise.

NJE can be defined as a facility designed for transmitting jobs (SYSIN or SYSOUT), operator commands and operator messages, and job accounting information from one computing system to another. In practice, the SYSOUT format is used to transmit files, messages and other data objects that are not directly job output. See "Uses of NJE" on page 1-5 and "File Transmission" on page 4-39.

An **NJE network** is a collection of peer-coupled systems connected by communication links. A "link" may be a teleprocessing line, channel-to-channel adapter, or channel-attached communication controller. Any member of an NJE network can send jobs, job output (SYSOUT), commands and messages to any other member of the network.

NJE Functions

NJE nodes can support one or more of the three functions: transmit, receive and store-and-forward.

The **transmit** function consists of packaging SYSIN or SYSOUT jobs in NJE Control Records and inserting them into the network.

The **receive** function recognizes jobs packaged in NJE Control Records and processes them. For example, SYSIN jobs may be executed at that node or SYSOUT jobs may be printed.

The **receive** function recognizes jobs packaged in NJE Control Records and processes them. For example, SYSIN jobs may be executed at that node or SYSOUT jobs may be printed.

A node having the **store-and-forward** function, receives NJE jobs, stores them on spool and forwards them to the next node.

Generally, all nodes must store and forward any data that is imbedded in NJE. When the data reaches its destination, it may or may not be processed as the user intended, depending on the facilities available at that node. NJE protocols allow the destination node to reject files that it cannot process or perform other system-dependent actions.

NJE Data Types

There are three data types. The first and most common type is a **job** which, in NJE terminology, may be either a **SYSIN** or **SYSOUT** stream. Throughout this document the term job will be used if no distinction is required. If a distinction is necessary the term SYSIN or SYSOUT will be used. SYSIN is that data being transmitted to a system for execution at the system. SYSOUT is generally output from a program intended to be printed, punched, or viewed at a terminal.

The second type of data is **commands** and **messages**. In NJE, they are transmitted as nodal message records (NMRs). In the case of commands, the text is intended to be executed on the receiving node. Messages are intended to be displayed on the receiving system. NMRs are not stored and forwarded through the JES2 spool. If a path does not exist to the next node, the NMR is discarded.

The third type of data is **network control records**. These include signon,signoff and path manager (NPM) records. The network path manager is presently only implemented in JES2 and allows each node in a JES2 complex to keep track dynamically of the path between itself and every other node in the network. In a complex network (one with multiple paths between two or more nodes) the network path manager is able to recover dynamically from a line or node failure and reroute traffic via an alternate path.

Path Management: JES2 has a network path manager which can keep a real-time topological view of the network by sending and receiving add and subtract records to other path managers. None of the other products have path managers; they rely on operator commands to update the route tables to reflect changes in the connections in the network.

For other definitions relating to NJE, see Appendix D, "Glossary" on page D-1 at the end of this publication.

A good overview of NJE can be found in *IBM Systems Journal V. 17, No. 3 (1978)* containing an article on 'NJE'. Reprints of this article may be ordered by the IBM form number G321-5071. For other reading material on NJE, please see Appendix C, "Bibliography" on page C-1 at the end of this publication.

NJE Products

NJE is supported by JES2, JES3, VM/RSCS and VSE/POWER (and by some non-IBM program offerings.) In this publication, reference to a particular subsystem or operating system implies the latest available level unless specified otherwise. All levels are NJE-compatible with one another.

See "Summary of NJE Features" on page 1-4 for a brief comparison.

MVS/JES2 Environment

All current releases of JES2 support NJE:

- MVS/SP JES2 Version 1 Release 3.4, or Version 2 Release 1.2
- MVS/SP JES2 Version 1 Release 3.6
- MVS/SP JES2 Version 2 Release 1.5
- MVS/SP JES2 Version 2 Release 2.0 (available third quarter 1987)

JES2 NJE supports BSC, CTC and SNA connections.

MVS/JES3 Environment

The current releases of JES3, which all support NJE are:

- MVS/SP JES3 Version 1 Release 3.4, or Version 2 Release 1.2
- MVS/SP JES3 Version 2 Release 1.5
- MVS/SP JES3 Version 2 Release 2.1 (available forth quarter 1987)

All levels of JES3 support BSC and CTC connections. With the SNA/NJE enhancement feature, MVS/Bulk Data Transfer (MVS/BDT) Version 2 may be used to support SNA sessions for NJE.

VM/SP Environment

All current releases of RSCS Networking support NJE:

- RSCS Networking Version 1 Release 3
- RSCS Networking Version 2 Release 1
- RSCS Networking Version 2 Release 2

All levels of RSCS support BSC and CTC connections. RSCS Networking Version 2 also supports SNA sessions.

VSE Environment

VSE/POWER Version 2 supports NJE with the following current releases:

- VSE/POWER Version 2 Release 1
- VSE/POWER Version 2 Release 2
- VSE/POWER Version 2 Release 3 (available mid-1987)

All levels of POWER Networking support BSC and SNA connections. Version 2 Release 3 offers Virtual CTC support utilizing the Virtual CTC support of VM.

Summary of NJE Features

The following table is provided as a summary chart showing which features are supported by the various products. The features shown are arbitrary and are neither meant to show any "subsets" of NJE, nor which features are optional.

Note: The BDT column refers to MVS/BDT in a JES3 environment.

Feature	JES2	JES3	RSCS	POWER	BDT
BSC Communications	Yes	Yes	Yes	Yes	No(J3)
SNA Communications	Yes	No(B)	Yes	Yes	Yes
CTC Communications	Yes	Yes	Yes	Vir.(2.3)	No(J3)
Network Path Manager	Yes	No	No	No	No
Formatted Commands	Yes	(A)	(A)	No	N/A(J3)
Data Compaction	Yes	No	No	(A)	No
Output Fan-Out	Yes	(A)	(A)	(A)	N/A(J3)
Spanned Headers	Yes	Yes	Yes	Yes	Yes
Multiple Streams	Yes	Yes(1)	Yes	Yes	Yes(2)
Parallel Links	Yes(BSC)	Yes(3)	No	No	No
Multiple Concurrent Paths	Yes	No	No	No	No
Alternate Path Routing	Yes	Yes	Yes	Yes	Yes

Key
Yes = Supports the Feature
No = Does Not Support The Feature
(A) = Accepts, but does not Send
N/A = Not Applicable
(J3)= Function Supported by JES3
(B) = Function Supported by BDT
(2.3) = Virtual CTC Support in POWER 2.3
(1) = JES3 supports one SYSIN and one SYSOUT stream in parallel.
(2) = BDT supports up to 28 virtual LUs (streams) in parallel.
(3) = JES3 supports up tp three links in parallel - all BSC or all CTC.

Figure 1-1. Features Supported by NJE Products

APAR References

APAR numbers in this document are current at the time of publication. Consult with the IBM Support Center for the latest status in case these APARs have been superseded.

Uses of NJE

NJE can provide a means for users to take advantage of batch computing facilities at geographically remote locations.

To move jobs

- NJE can be used to transmit jobs to the system containing the data sets or data bases required for job processing.
- NJE can be used to move jobs to systems with the available processing resources. Perhaps the processing power of a 3090 is available in the network. This is a simple form of manual workload leveling across nodes in an NJE network.
- NJE can be used to move jobs to systems with the special hardware features such as emulators, or vector processors.
- NJE can be used to move jobs to specific application processing centers. In this way, a customer may be able to justify a licensed program product for an entire corporation, while it could not for an individual site.

To move job output

- The most obvious reason for transmitting SYSOUT data sets is to get them to their appropriate locations, closer to the end users.
- NJE can be used to move SYSOUT to available print or punch resources, such as the printing power of an IBM 3800 printing subsystem.
- SYSOUT data sets may be sent to a special output device such as a plotter or a microfiche printer.

To assist migration

The ability to connect systems together can provide a migration aid. Systems running VSE, OS/MVS, and VM/370 can all be tied together in a compatible NJE network. In this way, jobs can be entered into any system in the network and can be either run on the "old" system (for production jobs not yet converted), or on the "new" system (for testing or production jobs that have been converted). In a JES2 Multi-Access Spool environment, the complex can be split into two complexes connected by NJE and migrated to a new release of JES2 in a smooth and orderly fashion.

Peer-group communication

Through NJE and electronic mail, users on the network can communicate with one another by sending messages and files between related work groups. This is the most common use of the IBM internal job network (called "VNET") which has become an extremely fast, easy-to-use, and valuable tool for communication within the company. VNET currently consists of more than 2000 processors connected in a world-wide network.

In addition, there are several large multi-establishment NJE networks outside of IBM, such as BITNET, NETNORTH (in Canada) and EARN (in Europe) which use NJE heavily for message routing.

Other uses

A system running VM/370 for interactive program development may be connected to remote processors running MVS. With this kind of a "mixed" or "hybrid" NJE network, batch work may be sent to the MVS machine, while keeping the VM system available for interactive use. This configuration may also be used for remote program testing and maintenance in supporting turn-key systems at remote sites.

In another mixed network, front-end processors for specific applications (e.g., CADAM) may be supported by larger batch processing systems. The batch systems may be used for large file storage and maintenance and large compute-bound jobs, while the smaller front-end processors can respond to a real-time or interactive workload.

NJE may also be used to transfer the contents of spool during a migration.

A distributed data processing network can be used to centralize and coordinate batch computing for an entire enterprise or corporation. NJE is an easily implemented and immediately useful vehicle for accomplishing this function.

Alternatives to NJE

There are alternative facilities to NJE for transferring jobs and data between batch operating systems. See "Alternatives to NJE" on page 2-21 for details.

- Shared Spool or Multi-Access Spool (MAS)
- Spooled Readers and Writers under VM
- RJE and Workstation Programs
- Data Transmission Programs[1]
- Physical Transportation Mechanisms

---

[1] See also "File Transmission" on page 4-39.

Chapter 2. Systems Programmer's View of NJE

Prerequisite Publications 2-2
Network Design 2-3
Naming Conventions and Terminology 2-8
Planning for Availability 2-10
Security Precautions 2-13
Performance Considerations 2-19
Alternatives to NJE 2-21
Network Implementation 2-24
Systems Requirements 2-24
JES2 Initialization Parameters 2-26
VTAM Parameters 2-32
Testing Techniques 2-39
Installation Exits and Modifications 2-39
Network Management 2-41
Availability and Recovery 2-41
Performance Management 2-44
Accounting Considerations 2-47

The systems programmer's role in network job entry is one of designing, implementing and managing the network. This chapter identifies the general tasks involved and provide installation tips for the various NJE products.

The systems programmer is also involved with providing guidance to operators and end-users at the installation. Therefore, the following chapters in this publication are also for their use.

Prerequisite Publications

The following publications are the minimum required set for NJE systems programmers. Where multiple form numbers are referenced, ensure that you have the appropriate one for your installation. See Appendix C, "Bibliography" for a more complete list.

General

- *NJE Concepts and Protocols Overview*, GG66-0224
- *NJE Formats and Protocols*, GG22-9373

MVS/SP-JES2:

- *JES2 Initialization and Tuning*, SC23-0046 (Ver. 1) or SC23-0065 (Ver. 2)
- *How JES2 Uses SNA for RJE and NJE*, GG22-9378

In addition, the self-study class "JES2 Communications" (SRA course code 32179) should be considered for JES2 NJE systems programmer education.

MVS/SP-JES3

- *JES3 Initialization and Tuning*, SC23-0041 (Ver. 1) or SC23-0059 (Ver.2)

MVS/BDT (Ver. 2)

- *MVS/BDT Installation*, SC23-0224
- *JES3 SNA/NJE Installation Considerations*, GG22-0253

VM/RSCS (Ver. 2):

- *RSCS Networking Planning and Installation*, SH24-5057
- *RSCS Networking Operation and Use*, SH24-5058
- *RSCS Networking Exit Customization*, LY24-5240

In addition, the class "VM/SNA Networking Facilities" (course code G3610) should be considered for VM systems programmer education.

VSE/POWER (Ver. 2)

- *VSE/POWER Networking User's Guide*, SC33-6140
- *VSE/POWER Installation and Operations Guide*, SH12-5329
- *VSE/POWER Version II Networking Design Guide*, GG24-1570

Network Design

Before designing a network, you should determine the users, uses and requirements of the network. You should also determine how the network is to be implemented and managed. A good document for assisting the designers in this effort is the *Network Management Policy Development Guide* (GG22-9285).

Design Objectives: Consider the following when designing a network:

- Cost
- Performance (Overhead, Throughput and Response Time)
- Availability and Recovery
- Security and Auditability
- Flexibility
- Manageability
- Serviceability

Pure cost savings might indicate that you minimize the number, speed (and possibly reliability), and redundancy of the network connections. These considerations must be balanced with the benefits associated with the other objectives listed above.

SNA vs. BSC

With BSC NJE, the logical and physical configurations are similar. With SNA NJE, the logical and physical configurations can be quite different from an NJE routing perspective. In the diagram below, Node 1 can have a direct session with Node 3 even though there is no direct line between them. To the NJE subsystems, it appears as though they are directly connected. ACF/VTAM and Multi-Systems Networking Facility (MSNF) accomplish this connection through the communications controllers (cc) and the network control programs (NCP) transparent to the NJE subsystems.

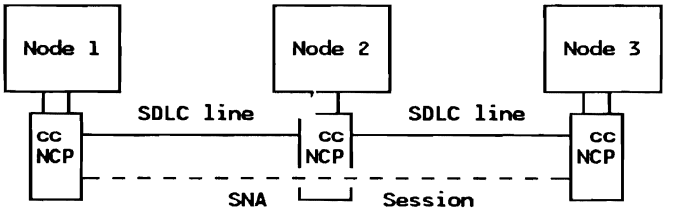

Topologies

Network topology is the physical and logical configuration of host systems and their interconnections. The physical topology is determined by the attachment of host processors, communications controllers and lines, as well as other interconnecting mechanisms such as channel-to-channel adapters or shared DASD. The logical topology is primarily determined by the various routing tables in the host and controllers. The following three figures show various topologies in network configuration.

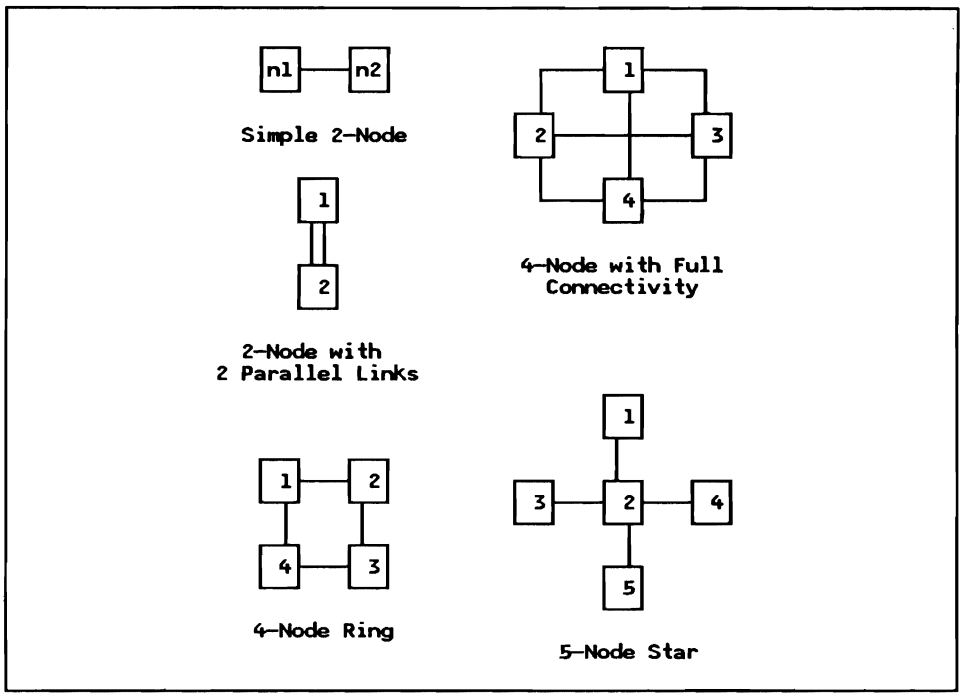

Figure 2-1. Simple Network Topologies

Using SNA

The SNA session can be configured in several ways:

1. Over one or more SDLC lines through a pair of communication controllers,
2. Over multiple SDLC lines through intermediate communication controllers,
3. Through a communication controller channel attached to two systems,
4. Through a CTC controlled by ACF/VTAM, or
5. Through VTAM between two copies of JES2 in the same processor.

In the first two cases, each SDLC line can actually be multiple lines defined as a single transmission group. In the first three cases, a communications controller running the Network Control Program (NCP) or Partitioned Emulator Program (PEP) is required with the appropriate line, physical and logical units defined. The last case requires no communication controller or lines and is usually used for testing.

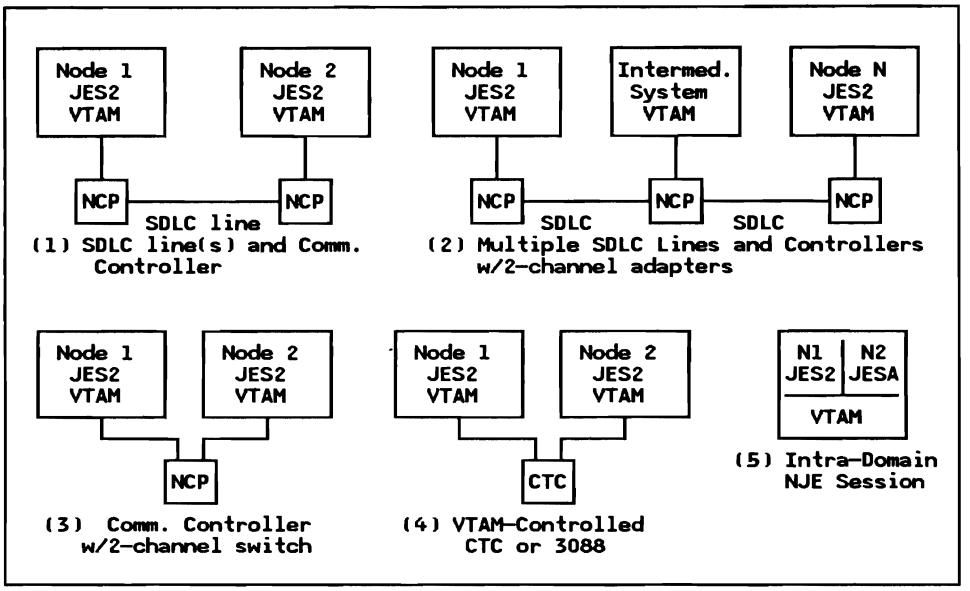

Figure 2-2. SNA NJE Configuration Options

Complex Configurations

A large number of nodes and links are hard to manage. Too many links are expensive. In a large network, it is not practical to have a physical link between every pair of nodes. Even if the nodes all support SNA sessions, it may not be worthwhile to have a logical session between every pair of nodes, especially since NJE supports store and forward traffic.

When designing a new network for NJE, a good starting point is to use existing teleprocessing links or corporate organizational boundaries in structuring the network.

Subnets with Gateways: As networks grow in size and complexity, and multiple networks are interconnected, it becomes practical to manage them in pieces with a limited number of control points. For this reason, large NJE networks should be broken up into "subnets" with "gateway" nodes providing the interconnection of these subnets, as the figure below portrays. Where multiple enterprises are in the same NJE network, use gateways for security, accounting and control.

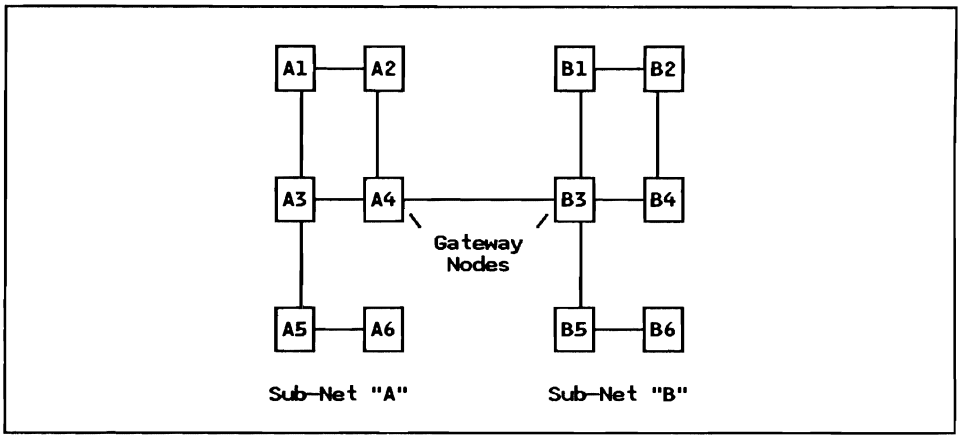

Figure 2-3. Gateway Configuration

Back-Bone Network Configuration: As the number of subnets and interconnections grow, the concept of a "hub" or "back-bone" becomes useful in managing the interconnection and NJE traffic. The figure below shows three subnets "A", "B" and "C" connected through gateway nodes "A5", "B3" and "C3" which comprise the back-bone of the network.

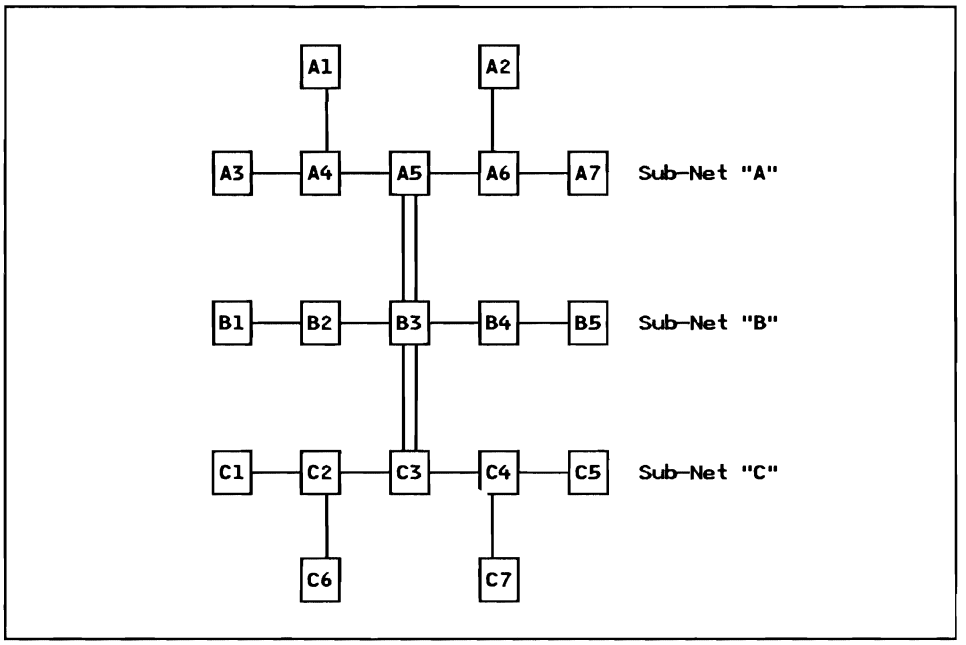

Figure 2-4. Back-Bone Network Configuration

Combining Multiple NJE Networks: The concept of gateways is also key in combining multiple NJE networks. See "Secure Network Boundaries" on page 2-16.

Multiple Time Zones

Systems supporting NJE must communicate with operators, end users and systems management records using local time references. Communications between NJE systems, however, use GMT (Greenwich Mean Time) or Universal Standard Time values to handle multiple time zones. All time and date stamps in NJE headers are expressed in GMT references.

For this reason, it is important to initialize your system with the correct GMT offset.

MVS JES2 and JES3: Failure to keep the TOD (Time Of Day) clock in correct GMT time in an NJE network spanning multiple time zones will create incorrect time stamps in SMF records, and prevent the JES2 path manager from recognizing nodal connections.

When the system is IPLed, the TOD Clock should always be set with the correct offset from GMT. The offset of the local system is determined at system initialization by the PARMTZ member in PARMLIB. Do not attempt to change the TOD clock after initialization with the SET CLOCK or SET DATE command. The system must be re-IPLed to correct or change the clock.

RSCS: With RSCS Version 2.2, the time zone parameter is no longer supported on the LOCAL or LINK statements. The offset of the local system is determined at system generation time by the SYSTIME macro which is part of DMKSYS. With NJE headers, it is not necessary to know the offset of other systems because all time stamps are in GMT.

Naming Conventions and Terminology

NJE Addressing

NJE uses a 2-level addressing scheme: a 1- to 8-character node name and an optional 1- to 8-character remote workstation, a program or a userid name.

Node Names: Pick node-names that will **never** have to change. Otherwise, the entire network will have to be synchronized, and end-users and operators will have to be notified to use the new names and change their JCL. See "Changing Node Numbers or Names" on page 2-42.

Nodes are identified by a 1- to 8-character alphameric name. In JES2, the default node name is of the form 'Nnnnn' without leading zeros, but we recommend using more descriptive names. Although node names, not numbers, are used for all NJE system-to-system communication, JES2 stores node names (and RJE workstation identifiers) internally as a binary number.

Userids: These may refer to TSO users (1- to 7- characters), VM/CMS users or program names (1- to 8-characters).

Program Names: Like remote workstations and userids, these are the second level of NJE destination naming and may represent an interactive subsystem like CICS or IMS.

JES2 Addressing: JES2 supports up to 1000 nodes and 4000 remotes (RJE stations). Remotes and nodes are defined during JES2 initialization. These definitions can only be changed by a warm-start of JES2. Through a trivial modification to JES2, the $MAXNODE equate may be changed to support over 4000 nodes (and JES2 re-assembled).

JES3 Addressing: There is no limit to the number of nodes or remotes that can be defined to JES3. For MVS/BDT, however, only 99 directly-connected SNA nodes can be defined.

SNA LU Names

These names are not referenced by users for NJE destination routing. They are usually the same as the Node Names, but they don't have to be. If there is more than one system in a node participating in the NJE network using SNA (e.g., a JES2 MAS node), then some names would be different to maintain uniqueness in the SNA network.

Consult with your SNA Network Coordinator to ensure unique names throughout the network.

System Identifiers

All members of a multi-access spool configuration have the same node name in the network. Particular members can be identified by a system-id or member number. NJE protocols do not allow jobs or SYSOUT data sets to be routed to specific members of a MAS complex. The JES2 control card /*JOBPARM or class structures can be used to select a particular system. (In JES3, the equivalent information can be specified on the //*MAIN card.) Messages and commands, however, can be routed to a particular member on an NJE node.

Network Standards

Systems programmers should be involved in establishing NJE (network-wide) standards for end users and operators. These standards should be designed, documented and tested before the network is implemented. See "Execution Node Requirements" on page 4-16 and "Output Node Requirements" on page 4-28 for input.

Planning for Availability

The network is available for useful work only if the sending node, the destination node, and an active path between the two are all working and available. Therefore, it is important to plan for availability when designing a network.

Availability can be designed into the network by increasing the reliability of each of the parts, minimizing the number of serially-dependent parts, and providing alternate paths. (Weigh the cost and complexity of these objectives against the value of increased availability.)

Some observations about network availability:

- Digital links are more reliable than analog links.
- Channel-to-channel adapters are more reliable than common carriers.
- Direct lines are better than indirect connections.

  Direct lines between every pair of nodes that have files to send to one another will maximize the availability, minimize the overhead and shorten the transmission time. This way, every node can access every other node without relying on intermediate nodes.

- Parallel links between adjacent nodes provide greater availability

  Multiple parallel links provide greater availability than a single link if they use different physical circuits.

- Alternate paths through other nodes provide for alternate path routing should the primary path become unavailable.
- SNA Networks have several advantages over BSC Networks including the ability to share lines with other applications, better recovery, and performance (especially over satellite links).

See also "Availability and Recovery" on page 2-41 for network management comments.

Parallel Links

JES2 supports an unlimited number of parallel BSC lines connecting two nodes. With SNA, multiple SDLC lines can be configured in a transmission group in ACF/VTAM to provide another level of redundancy.

JES3: Zero to three lines can be defined for each directly connected node in the network, as long as they are all of the same type (i.e., all BSC, or all CTC).

RSCS and POWER: Parallel links are not supported.

Multiple SNA Sessions

JES2 theoretically only supports one SNA session between two JES2 systems. With multi-access spool, however, multiple sessions can exist between a pair of nodes by having more than one system in a node start a session.

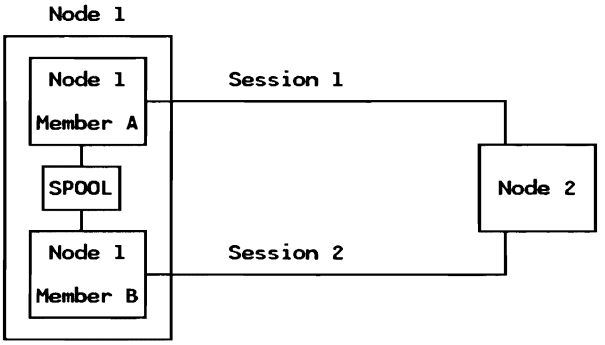

Figure 2-5. Parallel SNA NJE Sessions With Multi-Access Spool

Second Session Between Two JES2 Systems: Another way to have two parallel sessions between two nodes follows:

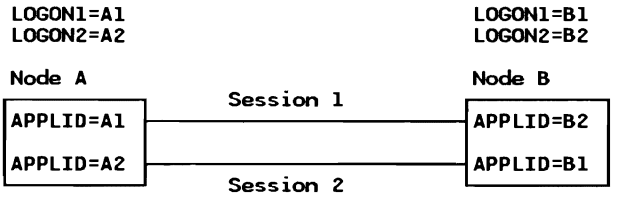

Figure 2-6. Parallel NJE Sessions With Multiple LOGONs (ACBs)

See "Second Session Between Two JES2 Systems" on page B-2 for details.

Multi-Access Spool Considerations

JES2 multi-access spool (MAS) nodes can either have all NJE connections on one member, or spread them over the complex. In either case, you may want to switch these connections to back-up a failing processor or communications controller. If the connections are to other JES2 nodes (and they are not pre-defined at either end), then the path manager will adjust dynamically to any reconfiguration. If the connections are pre-defined, then it is more difficult to change the member.

Backing-Up Predefined Connections

Advantages of pre-defining connections may be offset by the problem that these connections cannot be changed without a JES2 all-systems warm-start. Below are some techniques for backing up these connections:

1. Use hardware switches and secondary JES2 subsystems to bring up the defined member on another processor.

2. Use the $CONNECT function (exit 5) on the SHARE JES2 MODS tape to change pre-defined connections with operator commands.

3. Define multiple CONNECT statements, one for each combination of members that can be connected. A disadvantage to this is that you can't send commands or messages from those members that do not have a real connection.

RSCS Enhancement: Several users have found it useful to modify RSCS to act like a JES2 node at sign-on time. There is an RSCS modification on the SHARE JES2 MODS tape to eliminate the need for pre-defined connections for adjacent RSCS nodes.

Alternate Path Routing and Network Reconfiguration

JES2: The Network Path Manager in JES2 is designed for dynamic reconfiguration with other JES2 nodes. Multiple paths, alternate paths and path changes are managed automatically as connections are made or broken.

Mixed JES2 and non-JES2 Network: There are some special considerations when designing a network with JES2 and non-JES2 nodes:

- Non-JES2 systems do not have a network path manager to notify JES2 systems of connection changes in the network.
- Non-JES2 systems do not forward connection information records sent by the JES2 path manager to other nodes in the network.
- Connections between JES2 and non-JES2 nodes must be pre-defined in the JES2 node (except in the case where an adjacent RSCS node has the modification mentioned above).
- Pre-defined connections cannot be changed without a JES2 warm-start (unless the JES2 $CONNECT modification mentioned above is used).

Other Systems: There is no path manager, but the operator can dynamically change a path in the network with an operator command. See "Altering Nodes and Paths" on page 3-9 for details.

Security Precautions

Security precautions must be designed into the network configuration. Some understanding of the network use is required to plan for a secure network:

- Network users:
  - Who are they?
  - Where are they?
  - How are they identified?
- Resources:
  - What resources are required by the users?
  - What resources need protection?
  - What level of access is required for protection?
  - Where are they?
  - How are they identified?

From an NJE perspective, the actual mechanisms used to protect the resources should be at several levels, including, but not limited to, the following:

- RACF
- Encryption (DES)
- JES passwords
- JES exits
- SAF exits
- SMF exits
- other MVS exits and modifications

Host System Protection - Job Execution

RACF is the standard IBM facility used to protect resources from unauthorized access to programs and data on MVS and VM systems. RACF has no "network awareness", but is independent on each system.

RACF control files must be synchronized across nodes if the same userid is to be authorized to submit jobs on one node that execute on other nodes. This may require a network-wide coordination of userids and groupids. It may also require that passwords are updated simultaneously on all nodes.

User Identification and Verification

Identification: With MVS jobs, there is a user and/or group identification associated with each job. There is also an origin node for each job which can be used to validate authorization. However, for SYSIN jobs, this field (NJHGORGN) can be counterfeited with the **/*NOTIFY** statement.

With JES2, one or two JOB statements can be used. All jobs are verified at the execution node. Jobs sent with the **/*XMIT** statement have their first JOB statement verified at the origin (submitting) node, and their second JOB statement verified at the execution node. If the job fails on the submitting node, then obvi-

ously nothing is transmitted. (Authorization information is not propagated from the first JOB statement to the second.)

Propagation of Userid and Password: With the fix to APAR OZ81051, the submitter's user and group identification are propagated to spawned jobs that will execute on the local node. This replaces the password checking at job initiation. For spool offload operations, the submitting userid and groupid are now placed in the job header. This information is NOT transmitted to other NJE nodes without modifying JES2.

Propagating Userid and Verification Check: JES2 does not propagate the user and groupid on jobs destined for another node. However, with a modification to HASPNET, you can prevent JES2 from zeroing out the userid and groupid fields in the job header at the origin and intermediate nodes.

At a JES2 execution node, the presence of these fields indicates that the job has been verified and bypasses password checking on the execution node. However, another check will be made at the execution node to see if the job originated from another node, and if so, will force it to go through validation again.[1] This approach avoids having to maintain RACF control information for a user in multiple places, and assumes the security of the origin node. The userid must be defined on both nodes and have access authorization to the protected resources needed on the receiving node.

Alternatively, a RACINIT exit (on the execution node) can set PASSCHK = NO based on the userid so that the password need not be available at the execution node.

Both of these approaches must be evaluated for adequate security in the customer's environment.

Encrypting Transmitted Passwords: When passwords are transmitted in the job header, they are sent in clear text. Through the use of user exits or modifications to JES, the passwords could be encrypted, so they could not be disclosed during transmission. Either the DES encryption algorithm available with RACF, or the old "hashing" routine (available in RACF before DES) can be used. In both cases, JES2 exits 2 or 20 can be used on both the sending and receiving systems. For JES3, user exit UX40 can be used on the sending system and UX35 on the receiving system. The same encryption key must be used throughout the network.

DES Encryption: Installation-written code at the sending node could use the RACXTRT supervisor service routine to encrypt the password and place it in the Network Job Header. At the execution node, RACINIT pre-processing can use the encrypted password "as is".

---

[1] See APAR OY04615.

Hashing: The sending node can use the hashing algorithm to encrypt the password(s) and place them in the Network Job Header fields (NJHGPASS and NJHGNPAS).

The receiving node uses the decryption ("de-hashing") algorithm to "unscramble" the passwords before JES passed them to the authorization mechanism. The de-hashing code can be found on the SHARE JES2 MODS tape or by reversing the RACF hashing algorithm.

Command Authorization

It should be the responsibility of the target system to authorize (or deny) any commands submitted from other nodes. Part of this authorization checking includes validating the source of the command. This is especially true of user commands implemented in JES2 exit 5. If the source is from an unsecured part of the network, then all but the most "tame" (e.g., display) commands should be rejected. See "Command Authorization" on page 3-33.

Communication Protection

End-to-End Encryption: Cryptographic modems can be used to encrypt teleprocessing lines.

With ACF/VTAM, use either the Programmed Cryptographic Facility (5740-XY5) or the Cryptographic Unit Support (5740-XY6) to encrypt the session.

File or Data Encryption: AMS facilities with either the Programmed Cryptographic Facility (5740-XY5) or the Cryptographic Unit Support (5740-XY6) can be used to encrypt the sensitive data sets before transmission.

Network Access

JES2 Sign-on Authentication: NJE provides two sets of passwords for authenticating the connection at sign-on time: Node and Line passwords. Line passwords can only be used on BSC NJE lines.

In addition, VTAM can require a password for the ACB which is coded on the JES2 **LOGONn** initialization statement.

Job Transmission Control

Job's SYSIN can be validated at the submitting node, and again at the node of execution, but it is hard to control the transmission of jobs throughout the network once they have been submitted.

Because JES2 reader exits are not invoked for intermediate nodes, JES2 may have to be modified at gateway nodes to implement sufficient checking for all jobs entering the "secure" subnet.

It also may be necessary to prohibit (through VTAM parameters) SNA sessions which bypass the gateway hosts, so that the gateway becomes an intermediate NJE node for all jobs.

Other Data Flow Control

SYSOUT Data Transmission: SYSOUT data is not protected by normal RACF controls while it is on the subsystem's spool. If systems in the network handle highly sensitive SYSOUT data, your installation should set up a scheme to identify these files and control their transmission out from the authorized sphere of nodes. You can do this with job name, SYSOUT class, forms ID or some other output attribute.

Command Transmission: While it is still the responsibility of the target system to authorize commands submitted from other nodes, gateway nodes may want to check in-coming commands for source and type of command. Unfortunately, this cannot be done without a modification to the JES2 HASPCON source module (near label WWQUE).

Message Transmission: There is no way to control the flow of messages coming into or going out of a JES2 system, without modifying JES2 code. However, there is little security exposure in allowing all incoming or outgoing messages.

Control Information Transmission: You may also want to control sensitive information such as node names, remote names and user-ids, especially in networks interconnected with other organizations. See "Secure Network Boundaries" for details.

Secure Network Boundaries

Some partitioning of the network may be required to isolate or control indiscriminate access throughout the network. This is especially true when connecting two enterprises via NJE. Implement gateways at the boundaries of these subnets to authorize jobs, output, commands and messages entering the secure partition.

Usually, the NJE network is configured as follows:

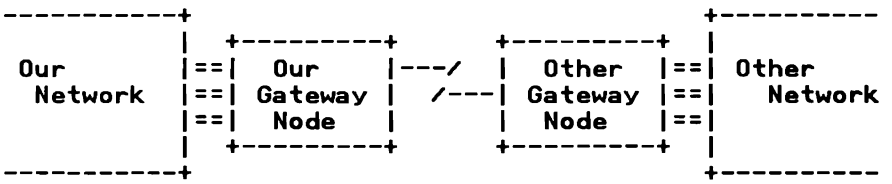

Referring to the above diagram, possible security precautions might include the following:

1. Validate and secure the connection between the two gateway nodes.
2. Don't let the other gateway know about our nodes.
3. Restrict knowledge about the gateway on our nodes.
4. Control Job (and SYSOUT) transmission to and from the other gateway.
5. Control Commands (and messages) coming from the other gateway.

The corresponding solutions to these requirements are discussed below:

Validate and secure the connection between the two gateway nodes

- Restrict the connection to a single gateway node (and system) on both sides of the connection.
- Use JES2 NJE node (and line) passwords.
- Secure the connection physically or with encryption if necessary.

Don't let the other gateway know about our nodes: Control NCC (Network Connection and Control) Add (M) and Subtract (N) records about our network from flowing from our gateway to the other gateway:

- Pre-define our network connections on our gateway node. NCC records do not get sent about pre-defined connections. This does not allow back-up or re-configuration. See "Backing-Up Predefined Connections" on page 2-11 for solutions to back-up pre-defined connections.
- If pre-definition is not possible, modify JES2 (NPM) on our gateway to prevent any NCC (M and N) records from going to the other gateway.
- Put a VM node between the two gateways. (This is rather drastic, but keeps the NCC records from flowing to the other network.)

Restrict knowledge about the gateway on our nodes: Define the other gateway node only where access is required and can be controlled. Also restrict NCC (M and N) records from flowing to our nodes.

- Pre-define the gateway connection. This does not allow back-up or re-configuration. See "Backing-Up Predefined Connections" on page 2-11.
- If pre-definition is not possible, it may be necessary to modify the JES2 Path Manager (NPM) on our gateway to prevent propagation of NCC records to other nodes.

Control Job (and SYSOUT) transmission to and from the other gateway: Control Jobs (including SYSOUT) from being transmitted to "our" network from the "other" gateway:

- Use RACF on our nodes to control job execution. SYSOUT is not controlled, but less of a risk.
- If necessary, use JES2 exits or modifications to the Job and SYSOUT Receivers on our gateway to screen all jobs coming from the other gateway. Be aware that the fields in the job header (NJHGORGN and NJHGORGU) which identify the origin of the job can be changed by the /*NOTIFY control statement and may NOT reflect the true origin of the job.

Control Jobs (including SYSOUT) from being transmitted from "our" network to nodes in the "other" network:

- Modify Job and SYSOUT Transmitters (at least on "our" gateway) to screen all jobs going to the other gateway.

Control Commands (and messages) coming from the other gateway

- Use JES2 nodal authority (NONETATH, etc.)
- Modify the Remote Console Processor to screen NMR transmissions.

Performance Considerations

You must understand the NJE traffic workloads and patterns to design the network with adequate performance. In addition to the above considerations for availability, answer the following questions when planning for acceptable performance:

- What volume of data is to be moved between each pair of nodes?
- What are the availability characteristics of the network?
- What other traffic will exist on the lines?
- What is the availability of host processors to send, receive and relay this data?

Provide the capacity to handle increased NJE traffic; NJE usage often increases unexpectedly.

Do not underestimate the impact of NJE work on existing system resources. Increased overhead can be significant in JES2 processor cycles, storage, spool space and the number of jobs and output elements in the system. The overhead of NJE is similar to RJE for equivalent data volumes.

Intermediate nodes play a critical role in network performance. If the data must be stored-and-forwarded between the origin and destination nodes, then the transit time is obviously increased and additional overhead is required.

If there is a physical connection or SNA session between every pair of nodes, then there are no intermediate nodes (unless a line or session breaks). In this case, host resources are not required to forward the data through intermediate nodes. However, full connectivity can be costly in large networks in terms of additional communication resources and operations complexity. If the data traffic patterns are known, then a NJE network can be better designed from a performance, cost and complexity standpoint.

Optimizing Performance: The following rules of thumb may help in designing a network with optimum performance:

- Use direct connections to all nodes for which there is significant traffic.
- Optimize bandwidth based on peak traffic requirements.
- For local connections, use a CTC or channel attached 37x5.
- Use SNA instead of BSC, especially over satellite connections.
- With SNA, intelligent use of pacing parameters is important.
- Use the maximum size of teleprocessing buffers.
- Provide, or even dedicate, adequate processor cycles, storage and I/O resources to NJE and communications subsystems.

- Use multiple sessions or links between NJE nodes.
- Maximize the availability and redundancy (back-up) of all network components.
- Minimize the time to repair all components of the network.

See "Performance Management" on page 2-44 for a more detailed discussion of most of these considerations and "SNA Performance Considerations" on page 2-37 for some specific SNA precautions.

Alternatives to NJE

There are alternative facilities to NJE for transferring jobs and data between batch operating systems.

- Multi-Access Spool (MAS)
- Spooled Readers and Writers under VM
- RJE and Workstation Programs
- Data Transmission Programs
- Physical Transportation Mechanisms

Multi-Access Spool (MAS)

Two processors in the same building can be connected via Multi-Access Spool or by Network Job Entry, but not both. This also applies to JES2 subsystems in the same MVS processor. See "Secondary JES2 Subsystems" on page 2-39 for details on running secondary JES2 subsystems in a NJE environment. In general, we recommend a MAS connection. The following Pro's and Con's may help.

- MAS Advantages

  1. Common queue of work for jobs and output - better utilization (load balancing) of CPUs and output devices.
  2. More of a single systems image for programmers and operators.
  3. No communication line, CTC or shared controller is required; the connection is made entirely through shared DASD.

- NJE Advantages

  1. There is more isolation between the processors for increased availability and security.
  2. You can connect processors at different levels of JES.
  3. Processors can be geographically separated. This may help in future data center splits and staged data center moves.
  4. No shared DASD is required.
  5. A very large complex may stress the limits of JES (e.g., size of job queue, number of remotes, etc.). This could be alleviated by splitting the complex into two (or more) nodes.
  6. There is a design limit of only seven JES2 processors that can be coupled with MAS.

Spooled Devices in Virtual Machines

When running a guest operating system under VM, the connection between the guest and the VM system may be either through spooled devices (readers, printers and punches), or through NJE (CTC or EP), or both.

A VM/CMS user's virtual printer, punch and reader can be spooled to the MVS guest. (JES2 exit 1 can be used to separate individual output elements and direct them to a specific user.)

In general, we recommend NJE facilities for transferring files between VM users and guest operating systems.

Remote Job Entry (RJE)

There are workstation programs under VM (RSCS) and VSE (RJE Workstation Program) which can make these systems appear as a "sub-host" or remote workstation to JES2 (or JES3 or VM or VSE). This was the traditional way of loosely coupling systems before NJE was available. These connections are not as powerful and were not designed for host-to-host communications on a peer basis. The RJE protocols were designed for remote readers, printers and punches. The NJE protocols provide a much richer set of functions such as retaining job and output attributes, preserving the originator's user-id, and allowing jobs, output, messages and commands to flow from any node, to any other node in the network.

Some systems, such as System/34 and the Personal Computer do not currently have any NJE facility. For them, RJE and remote workstation programs are the best available mechanism to facilitate job and output transfer. There is no IBM workstation program which runs on MVS. For additional details on this topic, see the WSC Technical Bulletin *Job Networking Facilities* (GG22-9042).

Bulk Data Transmission Programs

NJE may be used to transmit bulk data. There are also facilities which do not use NJE to transmit bulk data.

1. MVS/BDT
2. FTP Version 2
3. DSX

In general, we recommend NJE for small files. Other data transmission mechanisms are more appropriate for large files, because they can eliminate spooling of data at either end, and provide transmission checkpoint/restart. See "File Transmission" on page 4-39 for more discussion on this topic.

Don't forget the old-fashioned method of sending reels of tape through the mail. One liability of NJE is that it can be very easy to misuse by sending enormous amounts of data to another node's location. It is very easy to use the TSO **TRANSMIT** or CMS **SENDFILE** command. The impact on intermediate nodes can be devastating if there are no mechanisms to limit the size of files being sent.

Network Implementation

Implementing an NJE network is like implementing a SNA network; it takes coordination of names and parameters between the different sites.

When first installing an NJE connection, begin with a simple network of two nodes and let most of the options default. Then, as you add nodes, lines and options, you have a much better chance of determining the problem if something doesn't work correctly.

Systems Requirements

NJE is an integral function in the current JES2, JES3, RSCS and POWER products, so no special features are required.

Communications Links and Controllers

For communications with other nodes, you must install and define the appropriate teleprocessing links, channel-to-channel adapters, communications controllers and communications subsystems.

There are three different ways an NJE connection can be made: via a BSC line, a channel-to-channel adapter, or a SNA session.

BSC: A communications controller running the Emulator Program (EP) or Partitioned Emulator Program (PEP) emulating a 2701 is required with a port and UCB address for each BSC line. A real line must exist between the two EP line sets.

JES2 uses 'RTAM' (Remote Terminal Access Method) which is an access method internal to JES2. No separate communications access method is required.

Dial Lines: Dial-up lines may be used for NJE, either for BSC or SDLC connections. There are two basic problems, however:

- Dial-up (switched) lines are relatively slow.
- The connection must be made manually. NJE has no auto-dial facility.

Channel-to-Channel: A Channel-to-channel adapter (CTC or CTCA), or a 3088 connection is supported through RTAM similar to a BSC line. They must be dedicated to JES2 and cannot be shared with any other application. They must be generated (defined to MVS) as unshared UCWs on a block multiplexor channel with **FEATURE=370** coded in the IODEVICE macro (even though JES2 operates this in 360 compatibility mode). Also, the **TIMEOUT=Y** parameter should be coded in the IOCP generation. The device should also be included in the missing interrupt handler (MIH) list (IECIOSxx) member of Parmlib with a 3- to 5-minute interval.

All the NJE products support CTC except POWER.[2]

CTCs can also be used by ACF/VTAM, in which case they could be used as a SNA link, but this is transparent to JES.

SNA Requirements

VTAM: ACF/VTAM is required as the host communications access method. See "VTAM Parameters" on page 2-32 for detailed requirements.[3]

JES2: All current levels of JES2 support SNA NJE.

JES3: If SNA NJE is required with a JES3 node, the following is required:

- MVS/BDT Version 2 (HBD2103) with feature JBD2111, and
- either:
  - JES3 1.3.4 (HJS2329) with feature JJS2353, or
  - JES3 2.1.5 (HJS2215) with feature JJS2355.

RSCS: For SNA connections, Version 2 of RSCS Networking is required.

POWER: All releases of POWER Networking support SNA (as well as BSC).

SNA Communication Resources: Depending on the configuration, the proper lines, controllers and access methods must be installed, defined and activated for NJE use. See "Using SNA" on page 2-4 for configuration options.

---

[2] Virtual CTC support has been announced for POWER Networking Version 2.3, using virtual CTC links in VM.

[3] ACF/TCAM could be used as an alternative but not addressed in this publication.

JES2 Initialization Parameters

Required Parameters

The following parameters for the 2.1.5 or 1.3.6 level of JES2. Most NJE parameters are not required; the defaults are sufficient, especially for simple networks. The minimum set of parameters required on the NJEDEF initialization statement for NJE is:

NUMNODE The maximum node number defined to JES2 on the NODEnnnn parameters. (The default is one (1) which prevents any NJE connections.) This value may be changed on a warm-start in JES2 2.1.5 or 1.3.6, but required an all-systems warm-start or even a cold-start in earlier releases.

OWNNODE All NJE network nodes are assigned a number for internal JES2 processing and for operator commands and messages. This parameter defines the number of the node for this particular system. Node numbers do not have to agree across JES2 nodes, but it may help to have them the same to avoid confusion. Changing this parameter requires a JES2 cold-start (of the entire complex), so don't plan on changing it easily. The default is one (1), so if you are using NJE for the first time, you must use 1 to avoid a cold-start. This parameter must be the same on all systems in a MAS complex.

LINENUM This is the number of logical JES2 lines for NJE and a subset of the total number of lines specified by the LINEnnnn statements.

The number of logical lines used for RJE or NJE used to be specified with the &NUMLNES parameter, but is no longer required with JES2/2.1.5, because JES2 now determines this value by the number of LINEnnnn statements.

In addition, the following statements a- required to define the logical lines and nodes in the network:

LINEnnnn This is required for each direct BSC and CTC connection and for each SNA session to be established with another NJE node.

Using BSC, lines specify the actual unit address of the BSC port.

NODEnnnn While this parameter is not absolutely required, it is recommended that you specify more meaningful nodenames than "N1", "N2", etc.. Node numbers do not have to agree across JES2 nodes, but it helps to have them the same to avoid confusion. See section "Default Names" in the chapter on "Network Job Entry" in *SPL: JES2 Initialization and Tuning* (SC23-0046 for 1.3.6, or SC23-0065 for 2.1.5) for more discussion.

Required for SNA NJE Sessions

In addition to the above parameters, if this node is to use SNA NJE connections, then the following parameters are also required:

NODEnnnn **SNA** must be specified for any node which is to be connected via a SNA session.

LINEnnnn **UNIT=SNA** is used to specify a logical line for SNA NJE or RJE. No other parameters are required.

With SNA, the operator command to start networking may specify a particular line number at the initiating end, but the line chosen at the other end, if JES2, is the last available one made active.

LOGON1 The APPLID for JES2 NJE sessions initiated from this system must be identified with the **LOGON1** statement.

LOGON2 This may be used to define an alternate APPLID for SNA RJE sessions, or for NJE sessions initiated from other nodes. See "Multiple Sessions between JES2 Nodes" on page 2-38 for more details.

The number of logical VTAM application interfaces used to be specified with the &NUMLOGS parameter, but is no longer required with JES2/2.1.5, because JES2 now determines this value by the number of LOGONn statements.

APPL This is used to define VTAM APPLIDs for other nodes. It is required for other SNA nodes that this system is to have an SNA NJE session with, whose APPLID name is not the same as the node name.

See sections "Minimum NJE Configuration Parameters" and "Minimum Configuration for SNA NJE" in the chapter on "Network Job Entry" in *SPL: JES2 Initialization and Tuning* for a discussion of the required parameters and some good examples.

Connections to Non-JES2 Nodes

CONNECT initialization statements are required if the NJE network is to contain non-JES2 nodes.[4] In addition, any JES2 nodes which are connected through non-JES2 nodes must be pre-defined with a **CONNECT** statement. (This is because non-JES2 nodes will not pass the connection information records along to other nodes.)

In the diagram below, Node1 must have the Node3-Node4 connection pre-defined (in addition to the Node1-Node2 and Node2-Node3 connections). This

---

[4] An exception is for adjacent RSCS nodes which have a modification to make them act like a path manager node at sign-on time. See "RSCS Enhancement" on page 2-12.

is because the path management records from Node3 will be thrown away by RSCS at Node2.

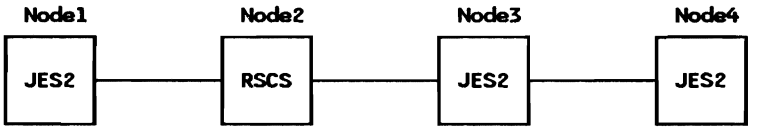

Cautions: Make sure the MEMBx parameters are correct or the NJE connection will not work. They should be specified as the system identifier (SIDn on the MASDEF statement) for JES2 nodes and '1' for non-JES2 nodes.

If a link to an adjacent node fails, alternate path routing cannot be used if the connection is pre-defined.

The **CONNECT** statements not only pre-define NJE connections, but makes them permanent until the next JES2 restart; they cannot be changed with operator commands nor by the path manager.[5] The **CONNECT** statement also makes it private to this node; the path manager will not propagate the knowledge of this connection to other JES2 nodes.

There may be other reasons for coding **CONNECT** statements, but they should be used cautiously. Excessive or inaccurate use of these statements can cause severe and difficult to analyze problems including:

- Performance degradation
- High CPU utilization
- Path manager loops
- Jobs looping endlessly through the network
- Inability to use alternate paths

See "Predefining Connections" and following sections in the chapter on "Network Job Entry" in *SPL: JES2 Initialization and Tuning*.

Other NJE Parameters

For detailed descriptions of these initialization statements, see *JES2 Initialization and Tuning*.

Multiple Transmitters and Receivers: The following parameters on the NJEDEF statement may be used to specify multiple job or SYSOUT transmitters or receivers on this system. They apply to all NJE lines (BSC, CTC and SNA) on the system and do not have to match the numbers specified on other members in the complex nor other nodes in the network. On each NJE line, unmatched transmitters and receivers are drained.

See "Multiple Transmitters and Receivers" on page 2-37 for performance implications.

---

[5] There is a modification to JES2 to allow operators to change connect statements ($CONNECT). See "Backing-Up Predefined Connections" on page 2-11.

JRNUM Number of job receivers on each line
JTNUM Number of job transmitters on each line
SRNUM Number of sysout receivers on each line
STNUM Number of sysout transmitters on each line

BDT (Version 2), RSCS Networking Version 2 and POWER Networking all support multiple transmitters and receivers, but JES3 (BSC) and earlier versions of RSCS do not.

Path Manager Variables: The remaining parameters on the NJEDEF statement are primarily used to tune the network path manager parameters and can be left to their default values in small or simple networks.

NATNUM Number of connections between NJE subsystems

PATH Maximum number of paths to any given node

DELAY Maximum message delay time

RESTMAX Maximum path resistance, above which JES2 will not select a route. This does not apply to directly attached nodes or SNA direct sessions. This can be set to zero (or very low) to prohibit (or restrict) intermediate node store-and-forwarding.

RESTNODE Node resistance for this system

RESTTOL Nodal resistance tolerance for alternate paths

TPDEF Parameters: These should be examined when first implementing NJE or adding more nodes or workload. They control the general teleprocessing capability of JES2 for NJE and RJE.

SESSION Maximum number of SNA sessions. (The default is the number of LINEnnnn UNIT=SNA statements.) You need one for each NJE connection and one for each logical unit on SNA RJE workstations. If you have MLU remotes, you will have to specify more

BUFSIZE Maximum size of NJE transmission buffers for BSC, CTC and SNA. The default is 400 bytes which is not large enough for heavy NJE traffic.

The actual transmission buffer size used is equal to the smaller value on the two adjacent nodes, and is determined at sign-on time. Presently in JES2/SP 2.1.5, good values for BUFSIZE are 1112, 1792 or 3840 bytes. See "JES2 TP Buffer Size and Virtual Storage Optimization" on page B-12.

BUFNUM Number of teleprocessing buffers. Usually, the default (twice the number of lines defined) is sufficient. The BUFWARN parameter below may be used to tune the number of buffers. Also, use the **$D TPDEF** command to see how many buffers are unused.

BUFWARN TP buffer warning threshold. When the number of allocated TP buffers for NJE and RJE reach this percentage of available buffers, the operator is notified by the $HASP050 JES2 RESOURCE SHORTAGE OF TPBF message. This parameter may be changed with an operator command.

Other JES2 Initialization Statements

CONDEF MASMSG Maximum number of messages that will be queued on spool. If you use the shared spool connection as an intermediate node, this parameter should be increased.

NETACCT Network Account Number Conversion Tables: If you use the JES2 format of four-character account numbers and wish to translate the local numbers to a different set on other nodes or vice-verse, you may want to use this facility. An alternative is to use the **/*NETACCT** control card in the job-stream, or a JES2 exit.

JOBDEF RANGE Job number range for jobs originating on this node: It may be helpful to identify the origin of a job by its job number. This parameter may be used to allocate job numbers only within this range to job originating on this system. If you have a large number of jobs on this system or a large number of nodes in the network, you may not have enough latitude for each node to use this scheme. If a number in this range is not available, JES2 will pick a number outside the range.

APPL SNA application name and characteristics. This parameter is only necessary if multiple systems (MAS members) on NJE nodes will be participating in SNA NJE sessions. A default value of the name on the LOGON1 initialization statement is generated for this node, and names on the NODEnnnn statements (if "SNA" is specified) are generated automatically.

COMPACT SNA compaction table definition. Compaction is only supported with SNA transmissions and takes place after compression. It is only performed by JES2 although the other systems can de-compact data. Unlike RJE, compaction is done on a session basis, not on an individual job or data set basis.

Use this carefully; the overhead may not justify the data reduction. Only certain data can be effectively compacted for a given compaction table. See *JES2 Initialization and Tuning* for details.

DESTID Route-code symbolic name. These are not usually required for NJE routing definitions, but may be helpful for changing a node's name or an RJE remote number. They may also be used to provide more meaningful instal-

lation names than those provided by JES2. Node names already defined by the NODEnnnn statements should not be defined on this statement. See the description in *JES2 Initialization and Tuning*.

READERnn Default print, punch and execution node for jobs submitted through this local reader may be specified on the **PRNODE**, **PUNODE**, **XEQNODE** parameters, respectively. There are no equivalent parameters for internal readers. Because most installations use internal readers (e.g., TSO) for local job submission, these do not apply. (As an alternative use one of the reader exits.)

Rnnnn.RDm Default print, punch and execution node for jobs submitted through this remote reader may be specified on the **PRNODE**, **PUNODE**, **XEQNODE** parameters, respectively.

VTAM Parameters

This section is not intended to replace the need for communication specialist involvement in the NJE implementation on a SNA network. The VTAM systems programmer is responsible for the VTAM definitions for NJE, but the following overview should help the JES2 systems programmer communicate the NJE requirements to that specialist.

There are seven different members of VTAMLST to consider when setting up a NJE session on SNA:

- VTAM Start Options
- Network Configuration
- Cross-Domain Resource Definitions
- Cross-Domain Resource Managers
- Local VTAM Applications
- Path Definition Tables
- LOGMODE Table Entries

These definitions must be specified and coordinated on each node using SNA in the network. The figure below shows conceptually how they fit together.

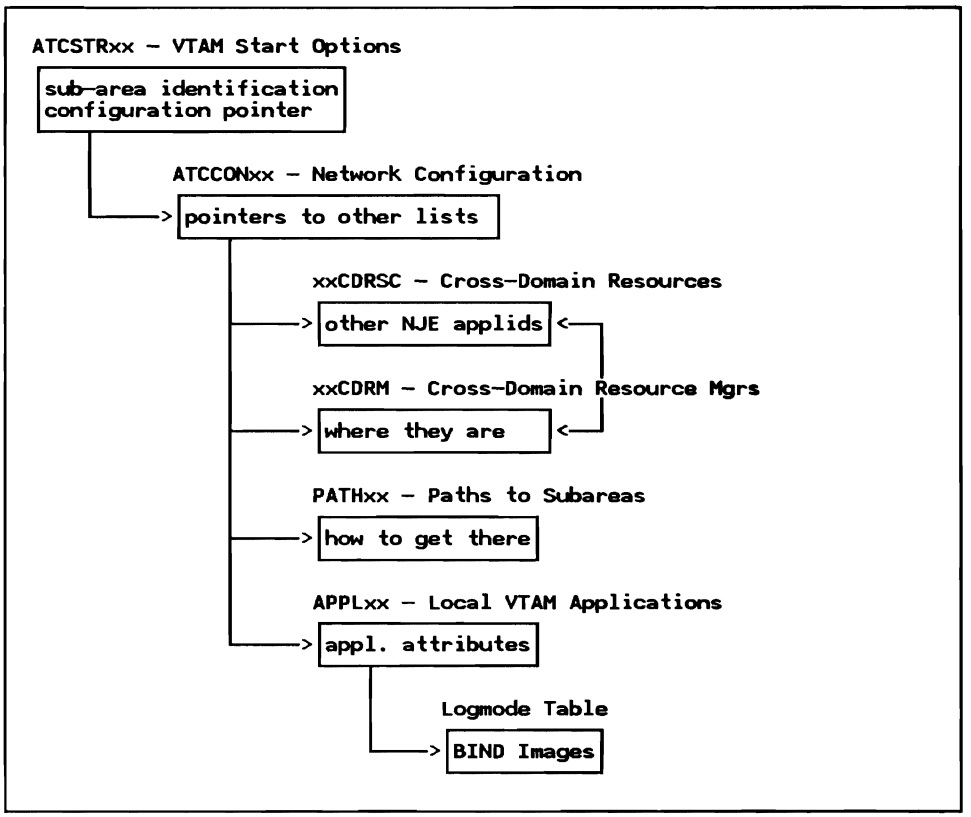

See *How JES2 Uses SNA for RJE and NJE* GG22-9378 for more background on NJE implementation with SNA.

VTAM Start Options

This member, named ATCSTRxx, defines various options for VTAM initialization. For the purposes of showing how the parameters all fit together, only two are discussed here. Other parameters are discussed later under performance.

HOSTSA Statement: This defines the number of the host sub-area. Sub-area numbers are used in the cross-domain resource manager and path tables below.

CONFIG Statement: In the following example, the two highlighted parameters are used to identify the local sub-area number and the suffix of the configuration member below. The remaining parameters are not addressed in this publication, but should be reviewed by a VTAM/communications specialist as part of the installation.

```
HOSTSA=1,              <====
  MAXSUBA=63,
  CONFIG=J2,           <====
  CSALIMIT=0,
  ITLIM=0,
  SSCPID=1,
  MAXAPPL=150,
  VTAMEAS=150,
  IOBUF=(350,255,19,,50,50),
  ...
```

Network Configuration

This member, named ATCCONxx (where 'xx' is defined in the VTAM start options member above), is merely a list of member names that are used to define cross-domain resources, cross-domain resource managers, paths and local applications.

Cross-Domain Resource Definitions

This member is pointed to by the network configuration member, and contains **CDRSC** statements. It is used to define other nodes' application-ids to VTAM, and identify which cross-domain resource manager controls them. The names should match the same APPLID name used by JES2 when issuing the $SN command in a SNA environment.

The following example shows how to identify two NJE applications named NJENODE2 and NJENODE3 which belong to cross-domain resource managers defined later. The names of the resource managers are only used to match the names on the CDRM statements below and do not have to match names defined in other hosts.

```
          VBUILD  TYPE=CDRSC
NJENODE2  CDRSC   CDRM=N2RMGR
NJENODE3  CDRSC   CDRM=N3RMGR
```

Cross-Domain Resource Managers

This is also pointed to by the network configuration member, and contains **CDRM** statements. It is used to identify sub-area numbers with the names of the cross-domain resource managers referenced on the CDRSC statements above.

The following example merely associates a sub-area number with the cross-domain resource manager and its resources defined above:

```
         VBUILD    TYPE=CDRM
N2RMGR   CDRM  SUBAREA=2,ISTATUS=INACTIVE
N3RMGR   CDRM  SUBAREA=3,ISTATUS=INACTIVE
```

Path Definition Tables

Path definition tables are also pointed to by the network configuration member; this contains **PATH** statements which are used to tell VTAM which adjacent sub-area is used to get to other sub-areas.

The following two examples show how to direct VTAM to reach other sub-areas through the sub-area of the host-attached NCP (10):

```
         VBUILD TYPE=PATH
PATH     PATH  DESTSA=(2,3,20,30),
               ER0=(10,1),
               VR0=0
```

or alternatively, the same paths could be coded separately...

```
         VBUILD TYPE=PATH
PATH2    PATH  DESTSA=(2,20),ER0=(10,1),VR0=0
PATH3    PATH  DESTSA=(3,30),ER0=(10,1),VR0=0
```

Local VTAM Applications

This member is also pointed to by the network configuration member, and contains **APPL** statements. It is used to define this node to VTAM and other applications (i.e., NJE subsystems on other nodes). It is also used to specify VTAM attributes of the applications and point to LOGMODE table entries below.

The following example shows how to code the APPL statement, specifying PASS and ACQuire authorities, a pacing value of 4 and a LOGMODE table entry named NJEMODE in the member of VTAMLST named JESMODE:

```
         VBUILD TYPE=APPL
NODEA    APPL   AUTH=(PASS,ACQ),
                VPACING=4,
                MODETAB=JESMODE,DLOGMOD=NJEMODE
```

LOGMODE Table Entries

This member is pointed to by the APPL statements above, and contains **MODEENT** statements to specify BIND parameters for the SNA session. JES2 creates the BIND from three sources: MODTAB, JES2 initialization parameters and an internal table.

Example:

```
JESMODE MODETAB
        MODEENT LOGMODE=NJEMODE,
                PSNDPAC=X'04',
                PRCVPAC=X'04',
                SSNDPAC=X'04',
                COS=X'00',
                ENCR=X'00'
```

Session Establishment - BIND Creation

In initiating a SNA session for NJE, both sides must first start VTAM and enable the VTAM ACB. (This is done in JES2 by **$SLGN1**, in BDT by **X SNA**, in RSCS by **NETWORK START** and in POWER by loading the NDT.) In addition, JES2 must enable a logical SNA line with $SLNEnnn. Then either side may initiate the session.

The general flow for initiating any NJE SNA session may be shown as follows:

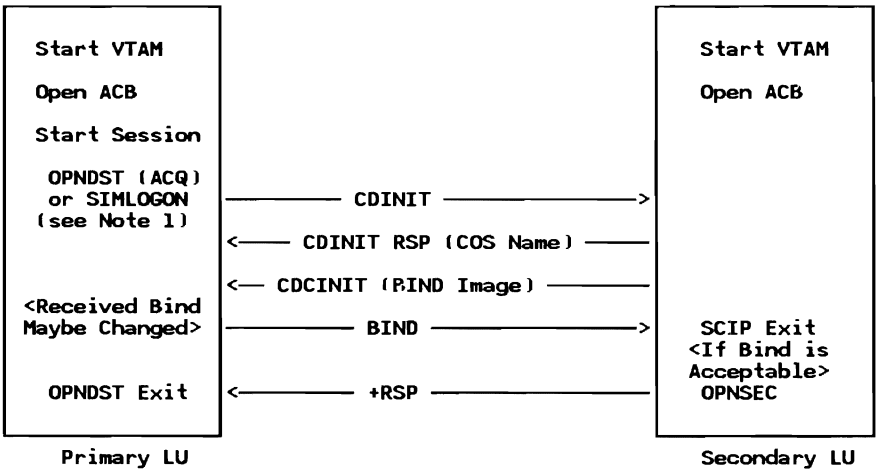

Note:

JES2 and POWER use OPNDST (ACQ); BDT and RSCS use SIMLOGON.[6]

The side which successfully initiates the session becomes the primary logical unit (PLU) for the life of the session and the other is the secondary logical unit

---

[6] For JES2 details see the section on "Session Establishment" in *How JES2 uses SNA for RJE and NJE*, GG22-9378.

(SLU). After receiving a BIND image from the SLU, the PLU sends the final (non-negotiable) BIND image to the SLU. This becomes relevant in determining various parameters such as pacing values and class-of-service (COS).

JES2-JES2 Sessions

The first side which successfully issues the **$SN,A=applid** command becomes the primary LU.

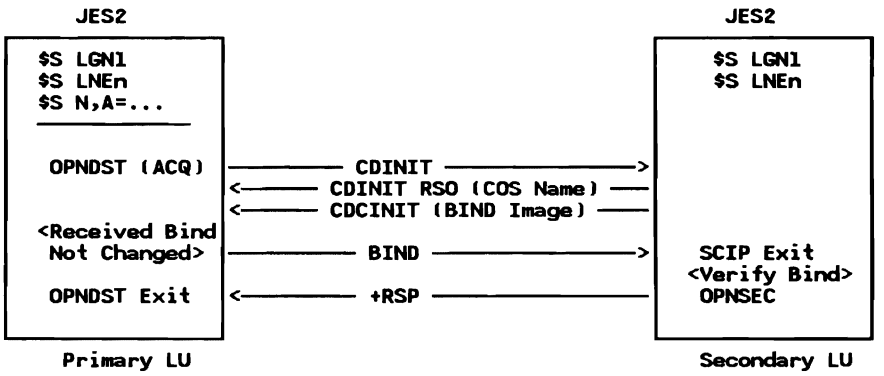

The only parameter in the LOGMODE table entry that is used for NJE is the **SSNDPAC** (secondary send pacing).

The BIND image sent by the SLU in response to the CDINIT are used for the session without change by the PLU. The RU size is determined by the BUFSIZE parameter on the TPDEF initialization statement; the smaller of the two connecting systems is used.

Pacing: Observe the following points in setting up pacing parameters:

- Never use zero (0) pacing with NJE. Zero means no pacing which can allow either NJE application overrun the other. This may create slowdown problems, excessive buffer utilization in VTAM and degrade other SNA sessions.

- Pacing values should be at least as high as the number of lines in the transmission group. Otherwise, any lines greater than the pacing size go essentially unused.

- Ensure that the pacing parameters you have specified are the ones actually in use on the session. with NETVIEW or VTAM traces.

For the primary LU, the VPACING value and a non-zero SSNDPAC value from the secondary's logmode entry allows the primary to specify his inbound pacing rate. For the secondary LU, VPACING on his APPL statement specifies his inbound pacing rate. In NJE, the node at which the '$SN,A=nodeid' is issued becomes the primary LU. NJE installations should specify VPACING=n on VTAM APPL statements and also specify a MODETAB and DLOGMOD which contains a non-zero SSNDPAC value. Both VPACING and SSNDPAC values should be identical, at least for initial testing. Failure to specify pacing can cause the line to become flooded with NJE data. This may cause NCP to go into slowdown mode or a fast CPU to overload a much slower one.

See "NJE Session Initialization" on page B-18 for more discussion on pacing.

RU (Teleprocessing Buffer) Size: In JES2, the NJE RU size is determined by the BUFSIZE parameter on the TPDEF initialization statement. It is set in three fields during NJE session establishment: in the BIND, the FMH type 4 and the initial and response signon records. However, JES2 only checks the RU size when receiving the FMH type 4. If the received size from the other node is different from this node's buffer size, the smaller of the two RU sizes is used.

The actual buffers in JES2 memory are prefixed with an RPL or IOB so they are (BUFSIZE+252) bytes long and will not span a 4K page boundary. Therefore, good values for BUFSIZE with JES2/2.1.5 are 1112, 1792 or 3840 bytes. See "JES2 TP Buffer Size and Virtual Storage Optimization" on page B-12.

RPL Count: JES2 currently sets the number of inbound RPLs to 6 and the number of outbound RPLs to 3. (See the EQUates SINLIM and SOUTLIM in HASPSNA).

Multiple Transmitters and Receivers: Currently, multiple transmitters on a single session (or BSC line) are not serviced equally. Therefore, the performance benefits of defining multiple transmitters are not fully realized, especially with larger transmission buffers.[7]

---

[7] See APAR OY06446.

Multiple Sessions between JES2 Nodes: See "Second Session Between Two JES2 Systems" on page B-2.

There are many parameters in VTAM and NCP that can affect NJE performance, as well as many environmental variables. Consult with your communications specialist and VTAM/NCP systems programmer, and see "Performance Management" on page 2-44 for more discussion.

Compaction

JES2 always sets the compaction indicator on even if compaction is not being used for that session. This is because JES2 is always able to receive a compaction table even though it may not send one.

JES2 only sends FMH3 if compaction for the receiving node is indicated during JES2 initialization (via APPL or Nnn statements) and the receiving node has indicated compaction is accepted via the flag bit in FMH4.

Compaction is only supported with SNA transmissions and takes place after compression. It is only performed by JES2 although the other systems can decompact data. Unlike RJE, compaction is done on a session basis, not on an individual job or data set basis.

Use this very carefully; the overhead may not be worth it and only certain data can be effectively compacted for a given compaction table.

Multi-Access Spool Considerations

JES2 multi-access spool (MAS) nodes may either have all NJE connections on one member, or they may be spread over the complex.

It is generally easier to have identical JES2 initialization parameters on all JES2 members in the complex, even if there are no plans to have NJE connections on certain systems. (You may want to switch the NJE lines over to another member if the NJE system is unavailable.)

If a member has no NJE connections and will not be used for back-up, then all parameters except OWNNODE may be omitted on the NJEDEF statement. Also, unless required for RJE, the TPDEF LINE and LOGON initialization statements may all be omitted. The OWNNODE parameter on the NJEDEF statement and the NODE statements must all be specified (the same) on all members.

CONNECT statements must specify the correct system ID number (1-7) on the MEMBA and MEMBB parameters. This is a common source of problems in failing to make an NJE connection. See also "Backing-Up Predefined Connections" on page 2-11.

See also the section on "Multi-Access Spool Considerations" in the chapter on "Network Job Entry" in *JES2 Initialization and Tuning*.

Testing Techniques

Secondary JES2 Subsystems: Entire JES2 networks can be simulated on a single MVS system by running a secondary copy of JES2 for each node you want to simulate. Even multi-access spool nodes can be simulated by having a secondary JES2 for each member. The nodes can then be connected by intra-domain SNA sessions without requiring any real transmission lines. Alternatively, BSC lines can be wrapped between two ports on the same controller, or 3088 connections.

VM/370 Virtual Machines: VM/370 can give you even more flexibility by simulating JES2 and non-JES2 nodes. The connections can then be made via virtual CTC adapters which again require no real transmission facilities.

Installation Exits and Modifications

JES2 Exits

Job Routing and Screening: There are no exits specifically for NJE, but the exits in JES2 input processing can be used to screen jobs coming into a JES2 node for execution.

Reader Exits (2, 3, 4, 20): These exits are taken at both the submitting and execution JES2 nodes.

These exits can be used to change the execution node for the job by setting the JCTXEQND field in the JES2 Job Control Table (JCT). They can also change the default print or punch route code for the job by setting the JCTPROUT and/or JCTPUOUT fields in the JCT.

Any JOB statement changes made by exits 2 or 3 at the submitting node will be transmitted to the execution node if a **/*XEQ** statement is used. JCL/JECL images added, changed or deleted by exit 4 at the submitting node will be transmitted to the execution node. Exits 2, 3, and 4 (and JES2 input processing) do not see any JCL or JECL statement after the **/*XMIT** statement on the submitting node.

Notification Exit: Exit 13 is invoked from the SYSOUT transmitter when the data set header has been read and processed for a file sent by the TSO/E Interactive Data Transmission Facility. It is only invoked when the destination user-id matches the external writer name (non-blank). The exit can be used to screen incoming files or to notify the recipient that an incoming file has arrived.

JCT Extensions: JCT user fields (JCTUSERn) and any user-defined fields in the JCT, are not transmitted with the job unless they were moved by the installation into the job header. See "Adding User Sections to NJE Headers (JES2)" on page B-22 for details on adding user sections to network headers.

JES3 Exits

There are several installation exits in JES3 networking code. Some of the exits allow the installation to modify fields in the job or data set headers for received data, and some allow modification of the headers before transmit. A brief description of each of the user exits follows.

- IATUX35 - validate or authorize commands from other nodes which execute locally.
- IATUX36 - pull accounting information from the first segment of the job header for received jobs and SYSOUT.
- IATUX37 - modify the first segment of the data set header for received SYSOUT data sets.
- IATUX38 - perform special processing of SYSOUT class for received data sets with this exit.
- IATUX39 - modify the data set header constructed by this node for the SYSOUT from locally executed jobs.
- IATUX40 - modify the job header built for locally submitted jobs.
- IATUX42 - notify recipients when Netdata files arrive.
- IATUX43 - modify the job header for SYSOUT data sets from locally executed jobs which are to be transmitted.

RSCS Exits

RSCS may be customized via installation exits to do the following:

- Reject or change the priority of a file when queued for transmission
- Tailor accounting information on file transmissions, receipts or when purged
- Tailor transmission algorithms
- Examine and modify NJE headers and trailers (RSCS Version 2.2 only)

For details, See *RSCS Networking Exit Customization*, LY24-5240 (or *RSCS Networking Planning and Installation*, SH24-5057 for RSCS Version 2.1).

POWER Exits

PNET Reader Exit: The RDREXIT may be used to examine NJE headers for both SYSIN and SYSOUT jobs as well as the JCL or JECL in jobstreams as they are read into the POWER system.

See the *VSE/POWER Networking User's Guide*, SC33-6140 and *VSE/POWER Installation and Operations Guide* , SH12-5329 for more information.

Network Management

Availability and Recovery

Link Failure

Parallel Links: Parallel BSC or CTC connections, multiple SDLC lines in a transmission group and parallel SNA sessions between two NJE systems provide good redundancy especially if separate communications facilities are used.

Alternate Paths: Even if there is no direct link available to a node, many NJE networks are so interconnected that there are other routes available.

This may require changing CONNECT statements or the RESTMAX parameter before JES2 will allow the routing over an alternate path.

Back-Up Communication Facilities: Even if parallel links or alternate paths are not available, there should be spare lines, modems and communication controllers that could be switched in if the critical facilities cannot be repaired immediately. Dial-up lines may be used in an emergency, but their slow speed may not be sufficient for productive volumes.

Host Outage

If there are other JES2 members in the complex, the NJE lines may be switched to one of those, assuming there are no pre-defined connections to adjacent nodes.

If there are pre-defined connections and other processors available but running other work, then the JES2 on the failing system may be brought up as a secondary subsystem on a live system. Likewise, if there is a test system or VM system available, the logical JES2 system may be brought up there. (If the connections are SNA, this technique would require a significant amount of additional VTAM parameters to be changed or replicated.)

If the host is an intermediate node, then find a way around the down host. See the section on Link Failures above.

If the host is the destination node and the outage appears to be long, jobs could be routed to alternate nodes if the execution or printing resources are available a those locations. See "Execution Node Requirements" on page 4-16 and "Output Node Requirements" on page 4-28.

Alternate Mechanisms

Spool Offload: JES2 uses NJE protocols for spool offload operations. Therefore, jobs destined for a node which is unreachable could be offloaded on one system and the offload data set (tape) carried to the destination JES2 systems.

Careful planning should reduce the frequency of parameter changes that may require disruptions to the network and to individual systems.

Network Restart: Almost all NJE changes can be made on individual nodes without requiring simultaneous changes on all nodes in the network. Exceptions to this in JES2 include errors in the Nodes Attached Table (NAT) where one node IPLs with a future TOD clock setting. The path manager will not honor a connection until that time is reached, or until the entire JES2 NJE network is shut down simultaneously.[8] To avoid this and other problems such as SMF accounting and data set expiration dates, make certain that the system is always IPL-ed with the correct time and date.

Practically all APAR fixes are coded so that they can be installed node-by-node in any order without requiring a network-wide warmstart.[9] User modifications to JES2 should also provide for staged implementation in a NJE network.

System Cold-Start Avoidance: Cold-starting a JES2 system can be painful, especially if it is a multi-access spool (MAS) complex with several processors. The only NJE parameter which requires a cold-start to change is:

- OWNNODE parameter on the NJEDEF statement

Changing Node Numbers or Names: NJE node numbers and node names should only be changed when there is no work on the queues for those nodes. Spool offload should be used to preserve the nodal routing of jobs if you need to change the node a node's number or name. Even though most of the routing information for jobs and output is expressed in spooled control blocks in terms of node number, there are some that reference nodes by name.

In addition, there are also other cold-start parameters which may need to be changed because of the increased workload imposed by NJE:

- SPOOLNUM and TGNUM parameters on the SPOOLDEF statement
- JOENUM parameter on the OUTDEF statement
- JOBNUM parameter on the JOBDEF statement

The NODENUM parameter on NJEDEF can only be decreased on a cold-start. (It can be increased on an

Also, CONNECT statements should be synchronized across all members of a MAS complex, so they should be changed only with an all-systems warm-start.

---

[8] See APAR OZ62754.

[9] APAR OZ53846 for JES2, and VM13405 for RSCS are the only known exceptions.

Spool Offloading NJE Jobs: Because spool offload stores jobs in NJE format, the node names (not numbers) are preserved. With the enhanced spool offload facility in JES2 1.3.6/2.1.5, the node name can be used as a selection criteria or modified to a new name or number upon reload. This is especially handy when changing OWNNODE.

Nodal message records (commands or messages) are not offloaded.

Initial Implementation of NJE: If no NJE parameters are defined in JES2, the local node-name defaults to 'N1', the number of nodes defaults to 1 and OWNNODE defaults to 1. The local node name and number of nodes may be changed with just a JES2 warmstart, but OWNNODE can only be changed with a JES2 cold-start.

If joining a large JES2 NJE network, you should keep the node numbers consistent to minimize confusion amongst operators and specify the same node number used by the other JES2 nodes. (They do not have to be the same because NJE protocols between nodes always use node names.) If this is not feasible, you may keep OWNNODE the same to avoid a cold-start temporarily, but they should be made consistent at the next opportunity.

Performance Management

NJE performance can be measured by job throughput and/or job transit time. To those managing the system and network resources, throughput may be the most important measurement of performance. To the end user and production scheduler, however, performance should be measured in job turn-around or transit time.

Throughput Optimization

Throughput is a function of line utilization, buffer sizes, pacing parameters, subsystem dispatching priority, hardware resources, other contending work for the same resources and many other factors. Job throughput can be measured in terms of jobs, records, or bytes transferred per unit time.

See "Second Session Between Two JES2 Systems" on page B-2 for two approaches to improve throughput.

Job Turnaround or Transit Time

High priority work requiring NJE transmission may be more important than over-all throughput. If so, several factors may help:

- Higher speed lines will minimize transmission time. For a single job transmission, one high-speed line (or transmission group) is faster than a large number of lower-speed lines.
- Increased throughput capacity may minimize transmission queue delays.
- If the important work volume is high, breaking it up into separate jobs or spin-off output elements will allow parallel or overlapped transmission and processing.
- Eliminate intermediate node store-and-forwarding.
- Set up multiple transmitters with different classes of service or selection algorithms to allow high priority jobs to be transmitted on reserved streams. (This requires a modification to JES2.)

  Once a job is selected by a transmitter, it will not be preempted by another. Therefore, it is important not to let a long job tie up a transmitter for extended periods when there is more important work to be sent.

Symptoms of Performance Problems

Performance should be monitored by the a performance management group, but problems are usually first noticed by the systems operators or even end-users. See "Network Problem Determination" on page 3-13 for a discussion on the following points:

- No Work Being Transmitted
- Transmission Queues Growing
- High CPU Utilization

- High Priority Work Not Being Selected
- "Ping-Ponging" Files
- Response Time Degradation on other Applications Sharing the Line

Performance Measurement

Data should be collected continuously to monitor NJE performance. SMF records may be analyzed to measure both throughput and turnaround.

Job Turn-around: Transmission, execution, printing and queueing at each phase contribute to the over-all job turn-around time.

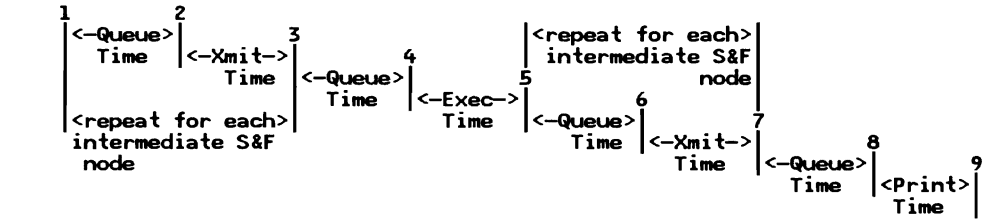

Figure 2-7. Elements of NJE Job Turnaround Time

SMF type 6, 26 and 57 records can be analyzed to show most of these events and queue times.

1. Time/date on reader at origin node - SMF26RST/SMF26RSD - recorded at every node and carried in the job header field NJHGETS. (Also recorded in type 6 records, but not type 57.)

2. Job transmitter start time/date - SMF26NST/SMF26NSD - recorded on job transmitter nodes only.

3. Job transmitter stop time/date - SMF26NPT/SMF26NPD - recorded on job transmitter nodes only.

4. Execution start time/date - SMF26XST/SMF26XSD - recorded on execution (and SYSOUT transmitter) node(s) and carried in the job trailer field NJTGSTRT.

5. Execution stop time/date - SMF26XPT/SMF26XPD - recorded on execution (and SYSOUT transmitter) node(s) and carried in the job trailer field NJTGSTOP.

6. SYSOUT transmitter start time/date - SMF57TSS/SMF57DSS - recorded on SYSOUT transmission nodes only.

7. SYSOUT transmitter stop time/date - SMF57TPS/SMF57DPS - recorded on SYSOUT transmission nodes only. Output processing start (SMF26OST/SMF26OSD) is close to the transmitter stop because output processing usually happens very soon after the output arrives at the print node.

8. Print/Punch start time/date - SMF6WST/SMF6WSD - recorded on the print nodes only.

9. Print/Punch stop time/date is not recorded. The time/date the type 6 record is written (SMF6TME/SMF6DTE) but may be significantly later than end of print if it hung on the back of the 3800E.

There are also other time stamps in the SMF type 26 records that may be useful in tracking jobs.

Adjusting for time-zone offsets, the SMF records can be accumulated at a central site and analyzed.

Throughput Measurements: Transmitter, line or session utilization can be approximated by analyzing SMF records (48, 53, 26 or 57) or the SYSLOG data sets.

JES2 Tuning Parameters: There are many parameters and variables in JES2 that can affect NJE performance including, but not limited to:

- Size and Number of TP Buffers
- Size and Number of Spool Buffers
- Spool and Checkpoint Data Set Response Time
- JES2 Dispatching Priority
- Number of Transmitters and Receivers per NJE Line
- Compaction
- JES2 Storage Usage
- Size of JES2 Job and Output Queue, and Number of Active Elements

See *JES2 Initialization and Tuning*, and *JES2 Performance Considerations*, GG66-0205.

VTAM Tuning Parameters: There are many parameters in VTAM and NCP, as well as other environmental variables that, can affect NJE performance.

- VPACING
- Pacing at the transmission, path and data link control levels
- Transmission Priority, Class of Service (COS)
- NCP MAXOUT
- Number and Size of VTAM Buffers
- Line Speed
- Transmission Groups
- Line Utilization
- Use of Satellites
- Delay Compensators
- Other Interactive Traffic on the Link
- NCP Utilization
- VTAM Storage Usage

Many of the above parameters and variables above affect one another in complex ways. See "SNA Performance Considerations" on page 2-37 and consult your communications specialist for advice before changing any of these parameters.

Accounting Considerations

Collecting Accounting Data

Collect useful data in order to manage the network, track jobs, audit for unauthorized use, and for billing.

Normally, accounting information is recorded at each host. To account for total network usage, these local data files must be merged and processed at a central point.

Network design can help facilitate this data collection and reporting. For example, the star network in Figure 2-1 on page 2-4 has simpler traffic patterns and the accounting files could all be sent to the "hub" of the network where many of the records are collected anyway. A full mesh configuration has more complicated traffic patterns, but could still be managed if the accounting records were sent to a common node.

When combining records from multiple nodes, they have to be identified as to their node of origin which is not recorded in the records themselves. This requires some non-trivial installation programming.

Uniquely Identifying Jobs: The following criteria may be used to uniquely identify a job, but are not available in all accounting records. Therefore, a subset of these "identifiers" may be sufficient.

1. Origin Node Name
2. Origin Job Identifier
3. Job Name
4. Time on Reader at Origin Node

Accuracy of Time Stamps

The TOD Clock must always be set with the correct offset from Greenwich Mean Time (GMT). Failure to do so in an NJE network spanning multiple time zones will create incompatible time stamps in SMF records, and Network Connection records (used by the path manager).

SMF Records

SMF (System Management Facilities) is a function of MVS that allows the collection and recording of various types of system and job-related information. This information is recorded in the form of a number of different records, which are numbered. Installations can process the SMF records with any number of application programs to analyze the data, produce reports, etc.

Job Header and Trailer Fields: Most of the information recorded in SMF records is transmitted in the NJE job header as the job is routed from node to node. The job trailer designed to carry job statistics that may not be available until the job is practically at the end of transmission.

See *System Management Facilities* GC28-1030 (370) or GC28-1153 (XA) for detailed description of the SMF records.

JES2 Accounting Records

JES2 uses SMF Type 26 (job purge) records to record all successful SYSIN job transmissions, and SMF Type 57 records to record all successful SYSOUT transmissions. Since multiple SYSOUT data sets may be transmitted within a job header and trailer, this record may represent multiple SYSOUT data sets.

None of these records record the node name of the local node. This can be a problem when combining records from multiple sites.

Type 26 Records: Execution node name (and other execution-related fields) are not recorded in the type 26 record when the jobs executes on the origin node.

Type 57 Records: The following standard job-header information is missing from the type 57 record cut by JES2:

- Jobname
- Time and Date on reader at original node
- User Identification from common exit parameter area

NJE Network Management Records: JES2 records the following information reflecting network events.

- 55 Network Sign-on
- 56 Network Integrity (invalid password)
- 58 Network Sign-off

Other Records: The following information is missing from the type 6 record cut by JES2 and other records (e.g., type 4 and 5)

- Original Job Number
- Original Node Name

Network Account Number: The Network Account Number is an 8-character identification that can be used in NJE environments. It can be useful in coordinating multiple installations with overlapping 4-digit local account numbers.

JES2 uses the Network Account Number in the job header if specified by the user on the /*NETACCT JECL statement, or converted from a local account number to a network account number through local-to-network account table set up by the NETACCT JES2 initialization statements. Otherwise, it defaults to the local account number, but on the origin node only.[10]

---

[10] Fixed with APAR OZ60994.

JES3 Accounting Records

Two SMF records are recorded by JES3 which contain network-related information. These are SMF type 26 and SMF type 57 records. The type 26 record is produced when the job is purged from the system and contains various job summary information. The type 57 record is produced for each transmitted job (or SYSOUT) after successful transmission and contains summary and resource usage information related to the network processing of the job.

There are no records produced in JES3 which record information of a network management nature.

Network Account Number: Users submitting jobs from JES3 can specify certain accounting information which they wish to accompany their job. This is accomplished by using the //*NETACCT control statement in the job's JCL stream. Refer to Figure 4-4 on page 4-12 for information on the placement of this statement in the JCL stream. The information which can be supplied on this statement is as follows:

PNAME	programmer's name (1-20 characters)
ACCT	network account number (1-8 characters)
USERID	userid for origin or notify (1-8 characters)
DEPT	user's department (1-8 characters)
BLDG	user's building (1-8 characters)
ROOM	user's location (1-8 characters)

This information is placed in the NJE job header which is built for the job.

MVS/BDT Accounting Records

MVS/Bulk Data Transfer writes a type 59 record when a file-to-file transmission is completed and when an NJE transmission is completed. In the case of an NJE transmission, a special transaction type section is included for NJE.

See *System Management Facilities* GC28-1030 (370) or GC28-1153 (XA) for detailed description of the type 59 SMF record.

RSCS Accounting Records

If the ACCT (account) option is on, RSCS creates an accounting record for file transmissions and receipts. These can be customized by installation exits. See *RSCS Networking Planning and Installation*, SH24-5057 and *RSCS Networking Exit Customization*, LY24-5240 for details.

POWER Accounting Records

The following account records are written by POWER and are mapped by the PACCNT macro

Network Record: Written for each SNA networking session or BSC networking connection.

Transmit/Receive Record: Written for each job or SYSOUT transmission or reception via NJE.

Other Account Records: POWER may also write account records for execution, list, punch, RJE and other activities. See Chapter 5 of *VSE/POWER Installation and Operations Guide*, SH12-5329.

Accounting Summary

The following table summarizes the information recorded by each of the systems to account for NJE network usage. It does not show all the NJE accounting information recorded by each system, but shows where most of the common information is recorded. There may be differences in the values and circumstances for many of the fields. Consult the product documentation referenced above for detailed information.

NJE Activity	MVS JES2	MVS JES3	VM RSCS	VSE POWER
Job Transmission (including SYSOUT)	SMF26-Jobs SMF57-SYSOUT	SMF26-Jobs SMF57-OUT/BSC SMF59-OUT/SNA	Network Accounting Record	Transmit/Receive Account Record
Job Receipt (including SYSOUT)	- N/R -	- N/R -	Network Accounting Record	Transmit/Receive Account Record
Sign-On's	SMF55	- N/R -	- N/R -	- N/R -
Sign-Off's	SMF58	- N/R -	- N/R -	Network Account Record
Start Line	SMF47-BSC SMF52-SNA	- N/R -	- N/R -	- N/R -
Stop Line	SMF48-BSC SMF53-SNA	- N/R -	- N/R -	- N/R -
Integrity	SMF49-line SMF56-net	- N/R -	- N/R -	- N/R -

Figure 2-8. Accounting Records for NJE Activities

Key:

- N/R -	Not Recorded
(*)	Generated internally
C8	Character field with a length of 8 bytes
B2	Binary field with a length of 2 bytes
P4	Packed decimal field with a length of 4 bytes
Note 2	Destination Node and Userid for VM does not distinguish between execution, print or punch.

Prefixes for NJE Headers and Accounting Records

NJHG..	Network Job Header General Section
NDHG..	Network Data Set Header General Section
ACNT..	VM/RSCS Network Accounting Card
SMF26..	JES2 and JES3 SMF Job Purge Record
SMF57..	JES2 SMF Sysout Transmitter Record
SMF59..	MVS/BDT Transmission Record
SMFNJ..	JES3 SMF Sysout Transmitter Record
NJE..	JES3 Job Networking Extension to the SMF 26 Record
AC..	POWER Account Record Header
NET..	POWER Network Account Record
NAC..	POWER Transmitter/Receiver Account Record
@@	= 'RDR', 'EX', 'LST', or 'PUN' (POWER Account Record)

Accounting Information (NJE header field)	**MVS JES2**	**MVS JES3**	**VM RSCS**	**VSE POWER**
Date Recorded (local time)	SMFHDDTE P4 (00YYDDDF)	SMFHDDTE P4 (00YYDDDF)	ACNTDATE C6 (MMDDYY)	ACDATE C8 (MM/DD/YY)
Time Recorded (local time)	SMFHDTME B4 (100ths of secs)	SMFHDTME B4 (100ths of secs)	ACNTDATE+6 C6 (HHMMSS)	ACSTOP P4 (0hhmmssF)
Local Node C8 (*)	- N/R -	- N/R -	- N/R -	NACCURR @@NODE
Local System ID (*)	SMF26SID SMF57SID C4	SMF26SID SMFSYSID C4	ACNTSYS C5 (serial & model)	ACSYSID CL1
Job Name C8 (NJHGJNAM)	SMF26JBN SMF57 - N/R -	SMF26JBN SMF59NAM	- N/R -	ACNAME
Local Job ID (*)	SMF26JID C8 SMF26JNM C4 SMF57CJD C8	SMF26JNM C4 SMFNJNUM C4 SMF59JID C8	ACNTID B2	ACNUMB B2
Original Job or file ID (NJHGJID)	SMF26NJB C8 SMF57JID C8	NJEJOBNO B2 SMFNJONM B2 SMF59NUM B2	ACNTOID B2	NACORGJ# B2 @@OJ# B2
Date on Reader at Original Node (NJHGETS)	SMF26RSD B4 SMF57 - N/R -	SMF26RSD B4 SMF57 - N/R - SMF59NDT C4	- N/R -	- N/R -
Time on Reader at Original Node (NJHGETS)	SMF26RST P4 SMF57 - N/R -	SMF26RST P4 SMF57 - N/R - SMF59NDT+4 C4	- N/R -	- N/R -
Origin Node C8 (NJHGORGN)	SMF26NON SMF57ONN	SMF26IGP SMFNJORG	ACNTILOC	NACON @@FRNO
Origin Remote ID (NJHGOGR)	SMF26INR+2 B2 SMF57 - N/R -	SMF26 - N/R - SMFNJRMT C8	ACNTUSER C8	@@FRM B1
Origin Userid C8 (NJHGUSID)	- N/R -	NJEUSRID SMFNJUSR	ACNTUSER	NACOUS @@FRUS
Origin System ID (NJHGORGQ)	- N/R -	- N/R -	- N/R -	- N/R -
Execution Nodename C8 (NJHGXEQN)	SMF26NXN SMF57ENN	NJEXEQU SMFXEQM SMF59XQN	ACNTDEST (note 2)	NACTN (if SYSIN) EXXNODE
Execution Userid C8 (NJHGXEQU)	- N/R -	NJEUSID NJEXEQU SMF59XQU	ACNTTOVM (note 2)	NACTUS (if SYSIN)

Figure 2-9 (Part 1 of 2). Accounting Information Recorded at each System

Accounting Information (NJE header field)	MVS JES2	MVS JES3	VM RSCS	VSE POWER
Execution System ID (*)	SMF26XID C4	SMF26XID C4	- N/R -	ACSYSID C1
Print Destination Node (NJHGPRTN)	SMF26PRD B2 SMF57 - N/R -	- N/R -	ACNTDEST C8 (note 2)	NACTN LSTNODE
Print Dest'n Userid (NJHGPRTR)	SMF26PRD+2 B2 SMF57 - N/R-	- N/R -	ACNTTOVM C8 (note 2)	NACTUS LSTTOUS
Punch Destination Node (NJHGPUNN)	SMF26PUD B2 SMF57 - N/R-	- N/R -	ACNTDEST C8 (note 2)	NACTN PUNNODE
Punch Userid (NJHGPUNR)	SMF26PUD+2 B2 SMF57 - N/R-	- N/R -	ACNTTOVM C8 (note 2)	NACTUS C8 PUNTOUS
Next Node C8	SMF26NNM SMF57NNM	SMFNJPTH	- N/R -	NACADJ
Previous Node C8	SMF26NLN	- N/R -	- N/R -	- N/R -
Network Account Number C8 (NJHGACCT)	SMF26NAC SMF57ACN	NJEACCT SMFNJACT SMF59NAN	- N/R -	- N/R -
File Size - # Records (NJTGALIN, -ACRD, *)	SMF26ICD B4 SMF57CNT B4	SMFNJRCT B4	ACNTRECS C4	NACCNTD B4
File Size - # pages (APA) (*)	SMF26XPG B4 SMF57 - N/R -	SMF26XPG B4 SMF57 - N/R -	- N/R -	- N/R -
File Size - # TP buffers (*)	- N/R-	SMF26 - N/R- SMFNJTRN B4	- N/R -	- N/R -
File Size - # Bytes	- N/R -	SMF26XBT B4 CMRNJCNT B4 (after compression)	- N/R -	- N/R -
Department (NJHGDEPT)	- N/R -	NJEDEPT C8 SMFNJDPT C8 SMF59NP# C8	- N/R -	- N/R -
Building (NJHGBLDG)	- N/R -	NJEBLDG C8 SMFNJBLD C8 SMF59NPB C8	- N/R -	- N/R -
Location (Room) (NJHGROOM)	SMF26ROM C4	NJEROOM C8 SMFNJLOC C8 SMF59NPR C8	- N/R -	- N/R -
Programmer Name (NJHGPRGN)	SMF26NAM C20 SMF57 - N/R -	SMF26NAM SMFNJPGM C20 SMF59NPN C20	- N/R -	- N/R -

Figure 2-9 (Part 2 of 2). Accounting Information Recorded at each System

In addition to the above, there are other accounting records for job input, execution and output. There are also many other fields that are recorded by the various systems. Consult the product documentation for details.

Chapter 3. Operator's View of NJE

Prerequisite Publications 3-2
Network Control 3-3
Network Start-Up 3-3
Network Shut-Down 3-7
Displaying the Network 3-8
Altering Nodes and Paths 3-9
Controlling Network Devices 3-11
Network Problem Determination 3-13
Job Tracking and Control 3-15
Displaying Transmission Queues 3-17
Transmission Priorities 3-18
Displaying Jobs in the Network 3-20
Re-Routing Jobs and SYSOUT 3-22
Controlling Jobs and Output 3-24
Transmission Recovery 3-26
Sending Commands and Messages 3-29
From JES2 3-29
From Other Systems 3-30
Command/Message Transparency 3-31
Command Authorization 3-33
Summary of Operator Commands 3-35

This chapter addresses the operational considerations of NJE. It is not written directly for the general operator, but more for the operations supervisor or systems programmer responsible for developing guidelines for the operations staff.

Prerequisite Publications

The following publications are the minimum required set for operators of NJE systems. Where multiple form numbers are referenced, ensure that you have the appropriate one for your installation. See Appendix C, "Bibliography" for a complete list of NJE publications.

JES2

MVS/JES2 Systems Operators are also the NJE Operators.

- *JES2 Commands*, SC23-0048 (Ver. 1) or SC23-0064 (Ver.2)
- *JES2 Command Syntax*, SX23-0008 (Ver. 1) or SX23-0010 (Ver.2)
- *JES2 Messages*, GC28-1354 (Ver. 1) or GC28-1353 (Ver.2)

JES3

As with JES2, the MVS System operator can also be the "NJE operator".

- *JES3 Commands*, SC23-0045 (Ver. 1) or SC23-0063 (Ver. 2)
- *JES3 Command Syntax*, SX23-0007 (Ver. 1) or SC23-0012 (Ver. 2)
- *JES3 Messages*, GC23-0044 (Ver. 1) or GC23-0062 (Ver. 2)

MVS/BDT (Ver.2): If SNA NJE is used with JES3, then BDT is also required:

- *BDT Commands*, SC23-0226
- *BDT Messages and Codes*, SC23-0227
- *BDT Command Reference Summary*, SC23-0228
- *JES3 SNA NJE Installation Considerations*, GG66-0253

VM and RSCS

The RSCS "operator" is actually a special class of VM user who starts up the RSCS virtual machine. After starting up the network, the RSCS virtual machine usually runs unattended and disconnected.

- *VM/SP Operator's Guide*, SC19-6202
- *RSCS Networking Operation and Use*, SH24-5058
- *RSCS Reference Summary*, SX24-5135

POWER

- *VSE/POWER Installation and Operations Guide*, SH12-5329
- *VSE/POWER Networking User's Guide*, SC33-6140
- *POWER Reference Summary*, SH12-5435
- *POWER Networking Design Guide*, GG24-1570

Network Control

Network Start-Up

JES2-JES2 Connections

In general, the steps for starting a JES2-to-JES2 NJE connection are simple:

1. Start JES2 on both systems.
2. Enable the Communication Facilities and Access Methods at both sites.
3. Start the Lines at both nodes.
4. Start Networking on one of the lines.

Dial-up connections are supported for both BSC and SNA, but the connections must be established manually.

BSC Connections: After JES2 is started (**S JES2** and **$S**), the logical JES2 teleprocessing lines must be started on each side of the connection. After both sides have started the lines, the **$SN** command can be issued on either node to start the NJE session. Jobs, output, commands and messages are then transferred between the two nodes, without any further operator involvement.

```
Node "A"                    Node "B"
--------                    --------
 S JES2                      S JES2
 $S                          $S
 $S LNE2                     $S LNE3
 $SN,LNE2     <or>           $SN,LNE3
```

SNA Sessions: The process is similar with SNA, with the following additions:

1. Start VTAM (after JES2 is up).
2. Activate the various physical and logical SNA units.
3. Start the JES2-VTAM interface.
4. Specify the APPLID on the **$SN** command.

Either side can issue the **$SN** command, as long as the lines are started on both sides.

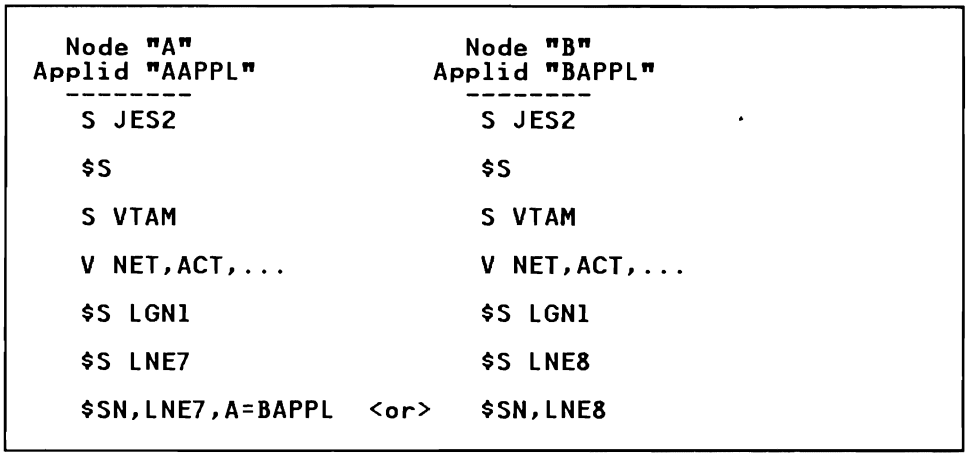

JES3-JES2

BSC (or CTC) Connections: On the JES3 side, start the NJE console operations once for the life of JES3 (***X NJECONS**).

On the JES2 side of the connection, start the logical lines (**$S LNEnnn**) before networking can begin.

Then the NJE task is called for the connection (***X NJE,NODE=nodename**) on the JES3 side, or **$SN** on the JES2 side.

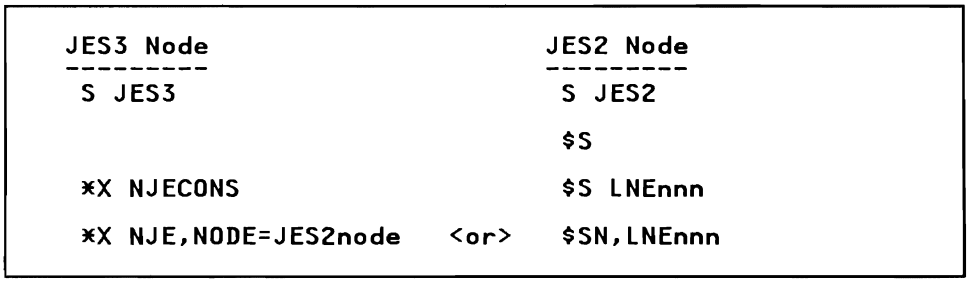

SNA Connections: On the JES3 side, SNA connections are made by the MVS/BDT component. The scenario is similar to the BSC procedures with the addition of starting MVS/BDT and issuing a few BDT commands.

The JES2 side of the connection is similar to BSC with the addition of starting VTAM, the JES2-VTAM interface, and the logical line is a SNA line.

Networking is actually started by the BDT command **+S SNA,NODE=nodename** or the JES2 command **$SN**.

```
JES3 Node                          JES2 Node
---------                          ---------
 S JES3                             S JES2
                                    $S
 S VTAM                             S VTAM
 S BDT
 *X NJECONS
 +X SNA                             $S LGN1
                                    $S LNEnnn
 +S SNA,NODE=JES2Node  <or>         $SN,LNEnnn
```

There are no order dependencies between the two nodes. Once the BDT **START SNA** command is issued, the link will be retried until networking is successfully established.

RSCS-JES2

BSC (or CTC) Connections: On the VM system, load and initialize RSCS and initialize the communication controllers and ports.

On the JES2 side of the connection, start the logical lines (**$S LNEnnn**) before networking can begin.

Then the NJE connection is started at either end by the **RSCS START** command or the JES2 **$SN** command.

```
RSCS Node                          JES2 Node
---------                          ---------
 <RSCS user signs on>               S JES2
 ENABLE cuu                         $S LNEnnn
 RSCS START JES2node  <or>          $SN,LNEnnn
```

There are no order dependencies between the two nodes. Once the RSCS START command is issued, the link will be retried until the link is successfully established.

SNA Connections: In addition to the above procedures, start VTAM and the RSCS/VTAM interface before the links are started.

```
  RSCS Node                                    JES2 Node
  (RSCSAppl)                                   (JES2Appl)
  ---------                                    ---------
                                               S JES2
VTAM console:
  VTAM START ...                               S VTAM

RSCS console:                                  V NET,ACT, ...
  GLOBAL LOADLIB RSCS
  FILEDEF config ...
  FILEDEF dest   ...
  LOADCMD RSCS  DMTMAN
  RSCS  INIT

                                               $S LGN1

  RSCS NETWORK START APPL RSCSAppl             $S LNEnnn

  RSCS START JES2Node LUN JES2Appl <or> $SN,LNEnnn
```

Many of the RSCS commands can be in a PROFILE or EXEC, but are shown here for illustration.

POWER-JES2

BSC (or CTC) Connections: On the POWER side, start the Network Definition Table

On the JES2 side of the connection, start the logical lines (**$S LNEnnn**) before networking can begin.

Then networking can be started by POWER (**PSTART PNET,nodename,...**) or JES2 (**$SN**).

```
  POWER Node                          JES2 Node
  ----------                          ---------
   SET PNET=NDTname                    S JES2
     (AUTOSTART only)
                                       $S LNEnnn

   PSTART PNET,JES2node,... <or>       $SN,LNEnnn
```

There are no order dependencies between the two nodes. Once the **PSTART** command is issued, the session will be retried until networking is successfully established.

SNA Connections: With SNA sessions, the procedures are the same, except you must start VTAM and activate the resources before issuing the (**PSTART**) command.

Network Shut-Down

JES2 Connections

Normal Line Termination: Either side of the connection or session can initiate temination. The **$PLNE** (drain line) command can be used to stop the logical line(s) used for NJE.

Immediate Termination: To stop the NJE lines immediately, follow the drain line command(s) with the **$ELNE** (restart line) command. The purpose of abnormal termination is to clear the session as quickly as possible.

After all NJE lines are stopped, use the **$PLGN1** command to bring down the JES2/VTAM interface. Finally, deactivate VTAM resources and stop VTAM.

Also, the **$PJES2,ABEND** will bring down JES2 as well as all the NJE lines.

JES3 Shut-Down

There is no single command in JES3 to stop all NJE sessions, but the ***C,line** (cancel line) command can be used to stop each line.

RSCS Shut-Down

Use the **SHUTDOWN** command to drain all NJE connections gracefully. To stop the NJE lines immediately, use **SHUTDOWN QUICK**. To deactivate an individual line, use the **DRAIN** or **STOP** command to bring it down immediately.

The **FORCE** command is not recommended as it ABENDs the links.

For SNA sessions, use **NETWORK HALT <QUICK>**.

POWER Shut-Down

Use the **PSTOP PNET,nodeid** command to stop specific NJE connections.

There is also a **PEND** command to bring down all PNET nodes as well as the entire VSE/POWER system.

Displaying the Network

On JES2 Nodes

Nodes: **$TN** displays the network as seen by the local system. In response to this command, JES2 displays each node defined to the system, whether it is active or not, and how it is connected. Individual nodes, or ranges of node numbers, can be displayed by using the node number(s) as operands.

Lines: Use **$DU,LNES** to display the status of all NJE and RJE lines and **$DU,LNEnnn** to display the status of specific lines.

JES2-VTAM Interface: Use **$DU,LGNS** to display the status of LOGON1 (and LOGON2 if defined).

On Other Nodes

Send commands (in the language of the target nodes) to other nodes from a JES2 node with a **$N** command.

JES3

Nodes: Use the ***I NJE,NAME=nodename** command to display individual nodes.

BSC Lines: In addition, use the **LINE** or **SNDR** operands to display the status of lines or logical senders associated with that node.

MVS/BDT: **INQUIRY NODE=ALL** displays all SNA nodes (both FTF and NJE) This will not show any BSC NJE nodes, for which the JES3 command ***I NJE** must still be used. The **NODE=** parameter limits the display to a particular node.

On RSCS Nodes

Nodes: To display a particular node line and other status, use the **Query locid** command.

Lines: To display all active RSCS lines, including NJE and other lines, use the **Query SYstem Active** command. To display all links (i.e., lines) defined to the system, (including NJE and other lines), use the **Query SYstem Links** command.

To display a particular line defined to the system and their default attributes, use the various forms of the **Query linkid** command.

Routes: To display all routes (i.e., paths) defined to the system, use the **Query SYstem Routes** command.

On POWER Nodes

To display the network definition table that is currently in use for NJE, use the **PDISPLAY PNET,ALL** command. (There are more operands on this command for more specific displays.)

Nodes: To display the status of a particular node, use the **PINQUIRE NODE=nodeid** command.

Lines: To display all lines used by NJE and RJE terminals, use **PINQUIRE ALL**. To display a particular line, use **PINQUIRE lineaddr | luname**.

Altering Nodes and Paths

On JES2 Nodes

JES2 has a dynamic network path manager function which keeps a real-time, accurate picture of all nodal connections, if they are all JES2 nodes. For networks of mixed nodes, however, this only works for the JES2 nodes which are either directly attached or connected through other JES2 nodes. There is no path manager on non-JES2 nodes.

The JES2 operator can not dynamically change pre-defined connections without the **$CONNECT** modification mentioned above. To change these connections (which are required for non-JES2 nodes), JES2 must be restarted with different **CONNECT** initialization statements. Nodes and paths can not be added, deleted, or renamed without a warmstart of JES2 with different initialization statements.

On JES3 Nodes

Nodes and lines can not be added, deleted, or renamed by the operator. However, nodes may be changed between BSC and SNA.

Paths: Only one path to a given destination is permitted. If a node or path in the network is down for an extended period of time, the operator can alter the routing tables with the ***F NJE,NAME=node1,PATH=node2** command.

On RSCS Nodes

The RSCS operator has complete control over all the NJE resources and can alter or redefine them with commands.

Nodes: To define a new node or change the attributes of an existing node, use the **DEFine linkid** command. To delete an existing node, use the **DELete linkid** command.

Paths: To define or modify a path to a non-adjacent node, use the **ROUte locid TO link** command. To delete a path to a non-adjacent node, use the **ROUte locid OFF** command.

Only one path to a given destination is permitted. The operator can alter the routing tables with the **ROUTE dest TO link** command. If a link goes down, RSCS will invoke an EXEC with the name of the failing link if one exists. This EXEC could issue the above commands to change the paths.

The **REROUTE** can be used to forward all files received on this node to another destination.

On POWER Nodes

All node definitions and routing information must be defined by the user with the aid of the PNODE macro, assembled in the Network Definition Table (NDT), and loaded during PNET initialization. If required, use the **PLOAD PNET,ndt** operator command to dynamically replace this table while POWER is active.

You can only specify one path and an alternate to a given destination. If the primary route is not active, but the secondary route is active, then the secondary route is chosen. Both routes will NOT be used together, i.e. as soon as the primary route is available all new transmissions will be sent over the primary route and the secondary route will cease to be used as soon as the current transmission finishes. If a node or path in the network is down for an extended period of time, the operator can alter the routing tables by reconfiguring the network definition table and reloading it with the **PLOAD** command.

Controlling Network Devices

There are many differences between the various NJE systems in the level of control that operators can have on NJE connections. Some NJE implementations exercise control at the line level, some at the node or destination level, and some at the particular stream level within a line. Many affect control at more than one of these levels. These streams may be for SYSIN or SYSOUT jobs. (Streams for commands and messages cannot be controlled.)

On a JES2 Node

The JES2 operator can control individual lines to adjacent nodes and individual transmitters and receivers on each of those lines. There is no control on a destination basis, but the operator can specify that all jobs from a particular node can be automatically put in hold status when received.

Lines and Sessions: JES2 allows any number of lines to other nodes in the NJE network, including parallel lines to adjacent nodes, but only one session is permitted between any two JES2 systems. (See "Second Session Between Two JES2 Systems" on page B-2 for exceptions.)

Using SNA, a session to another NJE node appears to the operator as a logical line. This way, other SNA/NJE nodes appear to be directly attached to this node even though there may not be a direct link between the two hosts.

Use the **$DU,LNEnnnn** JES2 command to display lines (and sessions); use the **$S**, **$P**, and **$E** commands to start, stop or restart them respectively. Also, the **$T** command turns on or off various types of tracing on individual lines.

Transmitters and Receivers: Depending on the setting of JES2 initialization parameters, there can be various numbers of the following logical devices enabled on each active NJE line:

- Job Receiver (JRn)
- Job Transmitter (JTn)
- Sysout Receiver (SRn)
- Sysout Transmitter (SRn)

Each one of these logical transmitters and receivers can be displayed and controlled independently with the following commands:

Display `$DU,Lnn.JT1,Lmm.SR2,...`

Drain `$P Lnn.JT1,Lmm.SR2,...`

Restart `$E Lnn.JT1,Lmm.SR2,...`

Start `$S Lnn.JT1,Lmm.SR2,...`

On JES3 Nodes

The JES3 operator can control individual lines to adjacent nodes; transmitters are controlled on a node or destination basis, and receivers are controlled on a line basis.

Lines: The JES3 operator can start (**✱X NJE,NAME=nodename, LINE=linename**) or stop (**✱C linename**) individual lines.

Transmitters: The operator can place a remote node in hold status with the **✱F NJE,NAME=nodename,HOLD** command. All jobs scheduled for that node and subsequent jobs entering the system destined for that node will not be transmitted. The operator can later release the node from hold status, then release the individual jobs.

Receivers: The operator can stop all job and SYSOUT reception on a given line with the **✱S linename,NORCV** command and later re-enable it with the **✱S linename,RCV** command.

On RSCS Nodes

Lines: Use the **START linkid TYPE NJE | SNANJE** command to start a particular link and the **DRAIN** and **STOP** commands to deactivate the link.

Transmitters: Use the **HOLD** and **FREE** commands to suspend and resume transmission on a NJE line.

RSCS (Version 2) supports multiple streams, and allows different transmission algorithms on each link.

On POWER Nodes

The operator can control NJE connections on a node basis; transmitters and receivers are controlled with the **PACT node** and **PDRAIN node** commands. Use the **PSTART** or **PSTOP** command to start or stop the line (BSC) or session (SNA). Also, the **PFLUSH PNET,node,TRn** command with the **HOLD** command will also hold a particular transmitter task, but allow processing to continue with other jobs.

Network Problem Determination

Connection Problems

Make certain that the NJE connection is fully activated at both ends. Many failures in connecting may appear only at one end, while the other end appears to be connected.

If the systems do not successfully connect, check the following:

JES2 (and VTAM) Active: Ensure that JES2 is active and started (**$S**) and VTAM has been started and initialized if SNA connections are to be used.

Node names: Ensure that node names match each other on both sides.

Node numbers: Ensure that node numbers and member numbers (i.e., MAS system IDs) match any **CONNECT** initialization statements. (Node numbers do not have to match definitions on other nodes.) If the connection is pre-defined, it should be pre-defined on both ends.

Application IDs: For SNA NJE, ensure that they match the VTAM definitions and match each other on both sides.

Check the **LOGONn** initialization statement used to define the APPLID name of JES2 to VTAM. The one for the NJE session started by this node must be defined by the **LOGON1** statement. (**LOGON2** can define an ACB used by another node.)

Communication Facilities: Check the teleprocessing lines, controllers, modems and switches to ensure that they are enabled. If it is a SNA networking session, ensure that the Physical and Logical Units are active for the session that JES2 will use.

VTAM/NCP Parameters: If it is a SNA session, the VTAMLST members must agree for the subareas, cross-domain resource and resource managers, paths, etc. If you encounter a "session not bound" error, then try the session without any (or the default) LOGMODE table entry.

Passwords: With JES2 BSC networking, there may be two passwords: the Line Password specified on the **LINEnnn** initialization statement, and the Node Password specified on the **Nnnn** initialization statement. If the other node is not a JES2 node, check the definition of passwords to ensure that they match. (With SNA NJE sessions, JES2 does not use line passwords.)

TOD Clocks: Ensure the TOD clocks on the two systems are specified in GMT and that the correct day, month and year are specified at both nodes. Otherwise, a future TOD value in the Nodes Attached Table (NAT) may prevent a successful path manger sign-on.

In a multi-access spool (MAS) complex, also ensure that the clocks in the various members are synchronized within the value set by the SYNCTOL parameter on the MASDEF initialization parameter.

Files Fail to Transfer

This can be due to several factors:

- The NJE connection was not correctly defined or started.
- Routing parameters are not correct.
- The line is down or the session broken.
- No work is available for transmission.

First ensure that the NJE connection is fully activated. Often, when the connection appears to be operational at one end, but not transmitting or receiving files, the other end was not correctly defined.

Run some simple tests, such as sending a message or command to that other node. Then try sending a small test job or file (with a high priority) to determine if the problem is in the files or the connection.

Transmission Queues Growing: This may be due to the reasons above, or a heavy influx of NJE work.

Routing Problems

Be alert to "ping-ponging", or files bouncing back and forth between two nodes without getting to the destination. This is usually caused by incorrect routing tables, or multiple NJE connections being down.

Missing Files or Jobs

If an end-user calls and says that expected jobs can not be found, consider the following procedure:

1. Look for the job with the **`$D'jobname'`** command on the local system.

2. Look for the job on other JES2 nodes with the **`$Nxx;$D'jobname'`** or **`$GD,'jobname',Jnnnn`** commands. (If the network is large, then the **`$GD`** command should be sent to specific nodes instead of broadcast to the entire network.)

3. Ask the user to re-submit the job and both of you can track its progress.

4. If still not found, ask a systems programmer to examine the SYSLOGs and SMF records of the possible nodes involved.

Job Tracking and Control

Monitoring Transmission Queues

SYSIN jobs are transmitted from the submitting (origin) node to the execution node by NJE, sometimes going through several store-and-forward (intermediate) nodes. Also, SYSOUT jobs are transmitted from the execution (or creation) node to the destination, sometimes going through intermediate nodes.[1]

At each step of the way, the jobs are queued for transmission and selected in turn. Operators at each of the intermediate nodes can display these queues to monitor the progress of individual jobs or the work-flow in general.

Usually, jobs and output are queued for transmission in first-in-first-out (FIFO) order within priority.

Job Transmission Messages

Below is a table of operator messages that are issued by the various systems for transmitting and receiving NJE jobs:

Event	JES2	JES3	RSCS	POWER
SYSIN Jobs				
- Queued for Transmission at Origin Node	$HASP100	-	DMTxxx101	-
- Transmitted to Next Node	$HASP520	IAT9190 IAT9191	DMTxxx147	1RA0I
- Received at Intermed. Node	- (2)	-	-	-
- Received at Execution Node	$HASP100	IAT9124 IAT9127	-	1RB5I
- Ended Execution	$HASP165	-	-	-
SYSOUT Jobs				
- Queued for Transmission on Execution Node	-	-	DMTxxx101	-
- Transmitted to Next Node	$HASP530	IAT9190 IAT9191	DMTxxx147	1RA0I
- Received at Intermediate Node	$HASP540	-	-	1RB5I
- Received at Destination Node	$HASP540	IAT9123 IAT9127	-	1RB5I

Figure 3-1. Transmission Messages by System

RSCS: These messages go the the RSCS Operator, not the System Operator. Also, there is no distinction between SYSIN and SYSOUT jobs. The "execution node" for SYSOUT jobs implies "sending node" for RSCS.

---

1 Even if SNA facilities are used, jobs can be routed through intermediate nodes.

2 See APAR OY05811.

Notification Messages

Unsolicited messages are sent to the originating and target user-ids at various points of NJE transmission. See "Notification and Tracking" on page 4-35 for specifics.

Finding and Controlling Jobs

If not on the local operator's system, commands can be sent to other nodes to determine if a particular job is there. From a JES2 system, this can be done with "global" or system-independent commands. Otherwise, use a "send operator command" command, in the command language of the target system. See "Sending Commands and Messages" on page 3-29.

Once a job is found on another node, commands to Re-Route, Hold, Release and Cancel Jobs can be sent to that node.

Displaying Transmission Queues

The following commands display the number and/or names of jobs in the NJE transmission queues according to the system.

JES2 Displays

Queue Size: **$DQ,Q=XMT...** displays the number of jobs on the job transmission queue with the $HASP645 message. **$DQ,R=...** displays the number of jobs on the SYSOUT or job transmission queues with the $HASP643 or $HASP645 message.

$DF,R=... displays the number of SYSOUT data set groups by destination with the $HASP621 message.

List Jobs in Queue: **$DN,Q=XMT...** displays the names of all jobs on the job transmission queues with the $HASP608 message. **$DN,R=...** displays the names of all jobs on the SYSOUT or job transmission queues.

SDSF: Use System Display and Search Facility (SDSF) to display the input, output or held queue by nodal route code with the **DEST** command. **I@** displays jobs on the "XMIT" queue.

JES3 Displays

The operator can display the names of jobs queued for NJE transmission. However, neither the length of these queues, nor number of records to transmit can be displayed.

***I A D=NJESND** displays jobs queued for transmission. This includes both SYSIN jobs and SYSOUT.

BDT (SNA): With the SNA/NJE Enhancement, ***I U,Q=BDT,BT=** displays jobs on the NJE transmission queues.

RSCS Displays

QUERY linkid with the appropriate parameters displays the transmission queue for a particular linkid.

All displays are for a particular linkid; there is no display command for all NJE links on the system.

POWER Displays

PDISPLAY XMT displays the job transmission queue for a particular destination, with the TNODE, TUSER, FNODE and FUSER parameters used to specify a particular destination node and user-id or origin node and userid.

Transmission Priorities

JES2

SYSIN Jobs: The job priority is used for determining job (SYSIN) transmission priority on JES2 nodes.

SYSOUT Jobs: There is only one network queue for output which is ordered priority within destination (node and remote). Output is transmitted FIFO within destination within priority.[3] The output priority is used for determining the transmission priority of job output on JES2, however, when a SYSOUT data set is selected (via $#GET) for transmission, JES2 will attempt to gather all SYSOUT data sets for that job. An exception to this is SPIN data sets which are transmitted separately.

Re-Ordering Transmission Queues: **$TJ** is used to change the priority of a particular job. **$TOJ** is used to change the priority of SYSOUT files.

JES3

BSC transmission scheduling is FIFO for all transmissions to o through an adjacent node. This is true for both Job SYSIN and SYSOUT transmissions. If the installation has 2 streams active to the adjacent node, then transmission is FIFO within stream type.

SNA transmission is FIFO by priority within transmission type. For a SYSIN Job transmission, the priority is taken from the **submitting job's priority** as specified on the JOB card or through installation defaults. For SYSOUT transmission, the priority us taken from the **executing job's priority** as specified on the job card or through installation defaults.

RSCS

Jobs and output files are managed on a single transmission queue. There is no difference between job-streams and job output; they all look to RSCS as print and punch files. They are all ordered by file size within priority except for priority 1. In priority 1, they are maintained in FIFO (first-in-first-out) order. In RSCS, the priority is represented by a decimal number from 0 (the highest) to 99 (the lowest). In the network job header, the priority is indicated in the field NJHGPRIO and is a binary value from 0 (lowest) to 15 (highest). The priority is either set by the user on the TAG command, or is translated from and to the job header according to the following table:

---

[3] Fixed with APAR OZ84420. Before this fix, output was transmitted in priority sequence within destination.

Network-to-RSCS Priority	RSCS-to-Network Priority
0 to 99 (lowest)	90-99 to 0
1 to 92	84-89 to 1
2 to 85	78-83 to 2
3 to 78	72-77 to 3
4 to 71	66-71 to 4
5 to 64	60-65 to 5
6 to 57	54-59 to 6
7 to 50	48-53 to 7
8 to 44	42-47 to 8
9 to 37	36-41 to 9
10 to 31	30-35 to 10
11 to 27	24-29 to 11
12 to 19	18-13 to 12
13 to 12	12-17 to 13
14 to 6	6-11 to 14
15 to 0 (highest)	0-5 to 15

Figure 3-2. RSCS Priority Translation

Your installation can extend the transmission algorithms. See *RSCS Networking Exit Customization*, LY24-5240 (*RSCS Networking Planning and Installation*, SH24-5057 for RSCS Version 2.1) for details.

Re-Ordering Transmission Queues: The **ORDER** command causes specific files to be placed at the start (first) of the specific link's transmission queue.

POWER

In the POWER XMT (transmission) queue, jobs and output are queued in priority sequence. Jobs are then selected in FIFO sequence within priority. The priority is indicated by a decimal number from 0 (the lowest) to 9 (the highest). In the network job header, the priority is indicated in the field NJHGPRIO and is a binary value from 0 (lowest) to 15 (highest). The priority is either set by the user or is translated from the job header based on the following table:

Network-to-POWER Priority	POWER-to-Network Priority
0 to 0 (lowest)	0 to 0
1 to 1	1 to 1
2-3 to 2	2 to 3
4-5 to 3	3 to 5
6-7 to 4	4 to 7
8-9 to 5	5 to 8
10 to 6	6 to 10
11-12 to 7	7 to 12
13-14 to 8	8 to 13
15 to 9	9 to 15

Figure 3-3. POWER Priority Translation

Re-Ordering Transmission Queues: Use **PALTER** to change the priority of a particular job, and use **PHOLD** and **PRELEASE** to disable and enable a job for transmission.

Displaying Jobs in the Network

Global Commands

If not on the local operator's system, the **$GD** command interrogates a given node, or all nodes for the presence of a particular job. JES2 is the only system that sends this command; only JES2, JES3 and RSCS interpret them.

The **$GD** command, without any node specification, is sent to all nodes in the network, so be careful of issuing this command without a specific nodename in a large network.

See Figure 3-4 on page 3-24 for the translation of **$GD** command to local system commands.

JES2 Displays

$DJ displays a job (or range of jobs) and shows the execution node if awaiting transmission as a job, or default print and punch destinations if awaiting output. This command does not show the routing of individual pieces of output. See the description of message $HASP608 for details.

$LJnnn,ALL displays all the attributes of particular output groups or job output elements (JOEs), including destination via the $HASP688 message.

$DF,R=Nnnn... displays the number of SYSOUT jobs queued and their attributes queued by destination, but does not list the particular job names.

STCs and TSUs: While this section is oriented to jobs, there are equivalent commands for started tasks (**$DS**, **$LS**, **$TOS**) and for time sharing (TSO) users (**$DT**, **$LT**, **$TOT**)

SDSF: For authorized TSO users, SDSF can also display jobs (SYSIN and SYSOUT) on the local JES2 queues.

JES3 Displays

***I J** displays all jobs. ***I U** displays jobs on the WTR or HOLD queue, but is not supported from remote nodes unless user exit 35 is coded.

RSCS Displays

QUERY FILE spoolid displays the attributes of a particular file, (including its routing destination) using its spoolid. You cannot display a file by its MVS (or POWER) jobname.

POWER Displays

The **PDISPLAY** command displays a particular job, jobs on a specific queue (XMT, LST, PUN, RDR), or jobs with a given origin or destination. This command has many different formats; see the *VSE/POWER Installation and Operations Guide* for details.

Re-Routing Jobs and SYSOUT

Global Commands

$GR re-routes a job at another node. This command is only honored at other JES2 nodes or RSCS nodes. JES3 and POWER nodes do not honor this command. See Figure 3-4 on page 3-24 for the affect on other systems.

JES2 Commands

$R re-routes a job or its output on a JES2 node. **$TOJ** alters the destination of a particular output group. The form "node:userid" cannot be specified; any userid routing information is lost with this command.

Alternatively, the operator may change the route-code of a given printer with the **$T PRTnnn,R=** command.

Held Jobs: Jobs in hold status awaiting execution (or conversion) cannot be re-routed without being manually released, and will not be automatically held at the new destination.

Held SYSOUT: Output held for TSO output (or other reasons) can be re-routed to another NJE node; however, held output destined for another node that is re-routed to the local node before being transmitted will not be held locally.

Default Routing: **$T RDRn,X=** sets or changes the input device default execution node, print node or punch node. This applies to local (RDRn) or remote (Rmmm.RDn) readers, but not to internal readers.

JES3 Commands

Jobs (both SYSIN and SYSOUT) can be re-routed with the SNA/NJE Enhancement with the ***X NJEROUT** command. (Previously, jobs on the JES3 execution queue could not be re-routed to another destination.) The only restriction now is that SYSIN jobs cannot be re-routed if they are queued for local execution.

SYSOUT jobs can be re-routed with the ***F U,...,ND=dest** command.

RSCS Commands

The **TRANSFER** command redirects a file to another destination. (With RSCS Version 1, this only worked to another RSCS node.)

See also the **REROUTE** command to set up a forwarding mechanism at an RSCS node.

PALTER queue,jobname,NODE=...,USER=... re-routes jobs or output to another node.

If the job is "owned" by the particular system or remote workstation, you can Hold, Release or Cancel it with either the appropriate local JES2 command or with a global command.

Global Commands

The following "global" or system-independent commands can be used to hold, release and cancel jobs at other nodes.

- **$GH** holds a job at that node.
- **$GA** releases a job at that node.
- **$GC** cancels a job at that node.

Note the following precautions:

- You must have job-level authority on the target node.
- If there is more than one job with the same name, it must be further qualified by the job number.
- If the job did not originate from your node, you must specify the O=nodename parameter to identify the submitting node.

Below is a table of "global" operator commands. They are sent as a formatted control block, so that any system can decipher them without having to understand the command syntax of the originating system. They are only fully supported on JES2 systems, but several other systems can process them if received from a (JES2) system.

Function	JES2 Command	Effect on JES2	Effect on JES3	Effect on RSCS	Effect on POWER
Display Job	$GDnode,'job'	$D,'job'	*I,J=job	Q FILE splid	(not supported)
Route Job	$GRnode,XEQ,'job'	$RXEQ,J=job,D=	(not supported)	TRAN link splid TO node	(not supported)
Route Output	$GRnode,OUT,'job'	$RALL,J=job,D=	(not supported)	TRAN link splid TO node user	(not supported)
Hold Job	$GHnode,'job'	$H'job'	*F,J=job,H	CH jobid HOld	(not supported)
Release Job	$GAnode,'job'	$C'job'	*F,J=job,R	CH jobid NOH	(not supported)
Cancel Job	$GCnode,'jname'	$C'job'	*F,J=job,C[P]	PURge jobid	(not supported)

Figure 3-4. Global Commands

JES2 Commands

$HJ holds the job on any queue. Jobs in execution continue running and output already on the JES2 hardcopy queue are still available for printing. Also, output on the XMIT queue is still available for transmission.

$AJ releases a held job on any queue. **$OJ** releases held output data sets for a job.

$CJ cancels a job or output group. **$PJ** purges a job's output, or a specified class of output for that job. **$OJ** cancels held output data sets for a job.

$TJ and **$TOJ,...,S=Y** are invalid from other NJE nodes (unless your node has Network authority). Therefore, to alter a job's class, priority, affinity, or hold an output group, you must ask the local system operator to issue the command.

STCs and TSUs: Again, there are equivalent commands for started tasks (**$CS**, **$PS**, **$OS**, **$TS**, **$TOS**, etc.) and for time sharing (TSO) users (**$CT**, **$PT**, **$OT**, **$TT**, **$TOT**, etc.).

JES3 Commands

Spool files can be held, released and purged with the ***F J=** command.

RSCS Commands

Spool files can be held and released with the **CHANGE** command and purged with the **PURGE** command.

POWER Commands

For jobs on the local POWER queues, use the following commands:

- **PHOLD** places the job on the specified queue in the Hold or Leave state.
- **PRELEASE** makes the job on the specified queue ready for execution, printing/punching or transmission
- **PCANCEL** cancels the execution of a currently running job.
- **PDELETE** deletes the job from a local queue.
- **PALTER** changes some of the attributes associated with the job in the specified queue.

For jobs on remote nodes, the **PXMIT** command sends a command in the syntax of the target system. Global commands are not supported on POWER.

Transmission Recovery

Jobs (SYSIN and SYSOUT) are handled on a store and forward basis. Responsibility for a unit of work does not pass from a transmitting node until it receives positive acknowledgment to the end-of-file which follows the Job Trailer Record. If transmission is interrupted before that point, the receiver discards any data it has received so far, and the transmitter requeues the entire job for retransmission from the beginning.

If a line failure occurs before the transmitter has sent end of file, the transmitter will requeue its work for transmission. If a line failure occurs after the end of file is sent but before acknowledgment is received, the work is requeued in 'HOLD' status to avoid immediate retransmission. JES2 issues a message to help the operator ascertain whether the receiving system successfully received the entire job before releasing it or canceling it. This is done to prevent duplicate jobs on the receiving system.

Undefined Destinations

Occasionally a destination is misspelled or specified incorrectly. This can be an error by an end-user in a JCL statement or by a systems programmer in defining the network destinations. This section describes what each of the NJE systems do when encountering a file destined for an unknown location.

JES2 Handling

Locally-submitted jobs: A job submitted to JES2 with an unknown node name will be failed with a JCL/JECL error on the submitting node. If the user/remote name can't be interpreted as a remote name, it is taken to be a TSO/VM userid.

When receiving SYSIN jobs: An unknown execution node name causes the job to be executed on the receiving node. The execution userid is ignored.

No message is issued to the local operator or submitting user. If the job specifies the unknown node name in its JCL it will be failed as above with an error message sent back to the origin node/user.

An unknown origin node name (in the network job header) is changed to the receiving node's name (in the JQE) although the received name remains in the job header, JCT and SMF records. An unknown origin remote/user name is changed to 'LOCAL' internally.

When receiving SYSOUT jobs: Unknown origin node, origin remote/user, execution node, and/or execution remote/user names (in the network job header) are reported to SMF, but are converted internally to the receiving node's name and 'LOCAL'.

An unknown destination node and/or remote/user name causes the SYSOUT to be printed on the receiving node locally. No message is generated in this case.

JES3 Handling

If a local user submits a job for execution at an unknown node, the job is failed with a JECL error.

If a local user submits and executes a job, with the SYSOUT destined for an unknown node, JES3 assumes that the destination is not NJE at all, but is RJE output. In this case, the job could sit on spool forever.

If JES3 receives a stream for store and forward for an unknown node, the job is placed in operator hold and the local operator receives as error message. If the identified node is later defined to JES3, and the job is released, it will be forwarded.

Finally, if JES3 receives a stream **from** an unknown node, the job is placed in operator hold and the local operator receives an error message. In this case, if the job is then released, it will continue with no other action. The error message is intended to be an alert for a possible infiltration attempt.

JES3/BDT Handling: For outbound work from the local node, BDT only gets involved if JES3 gives BDT a job and BDT doesn't know about the next destination. In this obscure case, the system programmer has probably mis-specified the definitions and is responsible for fixing them. BDT will reject the job (will not place it on its queue) and JES3 will hold the job.

For inbound work from other nodes, BDT does not perform any checking of the destination names.

For SYSOUT to be processed at the local node, there is no notion of undefined user in this case. If a value exists in NDHGRMT, it is assumed to be a remote workstation user and queue it accordingly. It is possible for the work to remain on spool forever if the "remote user" is not known.

RSCS Handling

For an unknown node, RSCS will check to see if the file originator is local to this node, or if the file with the unknown destination is a store and forward file. For a local origin file, RSCS gives the file back to the user. For a store and forward file, RSCS purges it.

When a file reaches the destination and RSCS cannot find the user, the file is printed or punched on the local system.

In all cases, RSCS notifies the originating of the error.

RSCS makes no checks on the origination node (for example, to make sure it knows of the originating node id).

POWER Handling

If POWER receives a job with an undefined destination name, it places the job or job output in "hold" in the local reader/output queue and tries to inform the job originator.

If job output arrives from another node destined for an unknown user, that output stays on spool forever, unless the system operator disposes them. This is because VSE/POWER does not have a user directory and does not distinguish between ICCF/CMS users and logical printer names.

POWER does not check origin node or origin userid.

Summary of Product Actions

Below is a summary of what each NJE product does when it receives a file which falls into one of these cases. This list only describes actions for SYSIN and SYSOUT jobs; NMRs are not included.

This should not be confused with the sending of a job to a destination node which is defined, but not reachable. In that case, it is held on spool until the node becomes reachable.

Unknown Node or User	JES2	JES3	RSCS	POWER
Unknown Dest'n Node - Local Origin	Fail Job (N) Print Output Locally	Fail Job (N) Leave Output on Spool	Return to Sender (N)	Hold Locally (N)
Unknown Dest'n Node - Remote Origin	Execute Job (1) Print Output Locally	Hold Job (M) Leave Output on Spool	Purge (N)	Hold Job (N)
Unknown Dest'n Userid at Destination Node	Print Locally	Leave on Spool	Print Locally (N)	Leave on Spool
Unknown Origin Userid - Local Node	Chg. Origin to Local	No Check	No Check	No Check
Unknown Origin Node	Chg. Origin to Local	Hold (M)	No Check	No Check

Figure 3-5. Unknown Destination Handling

Notes
(M) Message issued to Operator
(N) Notification Message sent to Originator
(1) If there is an undefined node name in the JCL, the job is failed and an error message returned to the origin node/user.

Sending Commands and Messages

In NJE, commands and messages are transmitted as nodal message records (NMRs). In the case of commands, the text is intended to be executed on the receiving node. Messages are intended to be displayed on the receiving system. In general, all systems with command capability must have message capability in order to receive the output from the command.

In JES2, NMRs are not stored and forwarded in the spool system. If a path does not exist to the next node, the NMR is discarded. If a command NMR is discarded, then a new NMR is routed back to the origin to inform the originator of the incomplete path. (In RSCS, the originator is notified of the incomplete path even for message NMRs.)

From JES2

Sending Commands from JES2

Formatted (Global) Commands: The following are supported by JES2:

SG D	Display job
SG H	Hold job
SG A	Release job
SG C	Cancel job
SG R	Route job

JES2 assumes that destinations for the global route command are syntax checked at the receiving node. As a receiving node, JES2 will reject a global command if only the jobname is specified and JES2 finds more than one job with that jobname. A message is issued to the local console if the global command is rejected. See Figure 3-4 on page 3-24 for the effect of global commands on non-JES2 nodes.

For other commands, JES2 uses the **$Nnnn;cmd-text** command to send a command to another system. (Commands cannot be sent to a VM guestid on another node.) These are sent as "unformatted" commands because the command text is in free-form text, not formatted into specific fields. The command text must obviously be in the command syntax of the target system.

Sending Messages from JES2

To System Operators: JES2 can send messages to another node via the **$DM** operator command, but not to specific users on another node. (**$Nnnn;SEND 'msg-text' USER=(userid)** would work if the sending system has NETWORK and SYSTEM authority on the target system, but this level of authority is not recommended.)

In addition to solicited messages, JES2 will also send notification messages for certain job activities. See "JES2" on page 4-35 for details.

To a VM/CMS User: A JES2 system operator can use the following command to send a message to a CMS user on a VM node (node number 'nnn' to JES2):

```
$Nnnn;MSG vmnode cmsuser message-text
```

To an VSE/ICCF USER: A JES2 system operator can use the following command to send a message to a remote user on a VSE node (node number 'nnn' to JES2):

```
$Nnnn;PBRDCST *,userid,'message-text'
```

From Other Systems

Sending Commands from JES3

The ***SEND** (or ***T**) command can be used to send commands to another node.

Sending Messages from JES3

A JES3 operator can use the ***MESSAGE,nodename.userid** (alias ***Z**) to send a message to another node, or to a user on a VM node. It can also be used to send a message to a JES3 or JES2 RJP (RJE) workstation.

Sending Commands from VM

The **CMD** command can be used to send a command to another system. The format is **CMD node cmd-text**.

The **SMSG** command can also be used; it must be used if the issuer of the command is not the RSCS operator. See "CMS Users" on page 4-32 for details. Commands cannot be sent to a VM guestid on another node.

Sending Messages from VM

To Other System Operators: The **MSG** command can be used to send a message to another system. It must be issued in the **MSG node RSCS msg-text** format, where "RSCS" or "SYSTEM" can be used to indicate that the target is the System Operator, not some interactive user. The **SMSG** command can also be used; it must be used if the issuer of the command is not the RSCS operator.

To Interactive Users: Messages can be sent to interactive users on other systems with the **MSG** command. (General users can use the **SMSG** command to ask RSCS to send the message.) See "CMS Users" on page 4-32 for details.

Sending Commands from VSE

The **PXMIT node-id,cmd** command (alias **X**) can be used to send a command to another system. Commands cannot be sent to a VM guestid on another node.

Sending Messages from VSE

The **PBRDCST** command (alias **B**) can be used to send a message to another system, or user thereon.

Command/Message Transparency

In general, commands and messages are forwarded without change through intermediate nodes. They are sent as Nodal Message Records (NMRs) and not stored on spool (unless necessary to bridge a JES2 MAS connection). Some exceptions to command and message transparency are listed below. For a detailed layout of the NMR, see the control block expansion in either *NJE Formats & Protocols*, GG22-9337, or the source of the JES2 $NMR macro.

JES3 Transparency

NMR Command Length Restriction: A command sent to JES3 is placed into a buffer and inserted into the system with a JES3 INTERCOM macro. The INTERCOM buffer can be a maximum of 80 bytes. In addition, certain keywords are added to the commands, with the result that commands greater than 59 bytes long are rejected.

To prevent needless command rejection, JES3 removes any trailing blanks from the command to reduce the length prior to checking for the 59 byte limitation.

JES3 Use of the Nodal Message Record (NMR): A field exists in the NMR which, for messages, designates the destination. This 8-byte field (NMROUT) is redefined several times to indicate a userid, a remote, or a console destination. The console destination usually has meaning only for command responses for a command that originated at a specific console. For JES3, the console destination always designates a JES3 console, not an MCS console. Therefore, only two bytes are required to contain the JES3 console number. This console number is placed in the field NMRROUT, which is the second two bytes of the 8-byte destination field.

RSCS Transparency

RSCS does not store and forward all fields in the NMR record. Only TO and FROM nodes and TO and FROM userids are handled as well as the message or command text. When the NMR record is used to contain console ids, logical routing information and node qualifiers, this information is lost if the NMR record is sent through an RSCS node. Fields which are not supported are NMRTOQUL, NMRFMQUL, NMRUCM, NMRDESC and most other redefinitions of NMROUT except for userid or remote id.

Global Commands through VM Nodes: RSCS Networking does not support global (i.e., formatted) commands which originate at its node. It will correctly forward formatted commands received from another NJE node. It also will receive and translate formatted commands into an equivalent RSCS command.

Fields NMRLEVEL and NMRPRIO are always set to 7 when an NMR is forwarded regardless of what they contained when RSCS received the record.

For messages containing a destination userid, NMRFLAGW and NMRFLAGT fields are both always turned on for Version 2.1 and earlier releases. Only NMRFLAGT is turned on for RSCS Version 2.2. This will cause messages destined for TSO users on JES2 nodes to be successfully displayed, but not those for RJE stations.

Command Authorization

Global Commands

These cannot be sent from another node, imbedded in a **$N** command.

JES2 Authorization

JES2 supports four levels of command authority, which can be specified on a node basis. The authority levels are as follows:

Job	Node has the authority to issue job-related commands.
Device	Node has the authority to issue device-related commands.
System	Node has the authority to issue certain system commands.
Network	Node has the same authority as local consoles; this includes device, job and system authority.

JES2 commands which control JES2 queues require both JOB and NETWORK authority. MVS commands require both SYSTEM and NETWORK authority. See Appendix A "JES2 Command Summary" in *JES2 Commands* for remote NJE restrictions.

JES3 Authorization

Only the following commands can be sent to a JES3 node for execution; all other commands are invalid:

- ***I J=jobname|jobno** (display job status)
- ***I B** (display statistics for number of jobs waiting to be processed)
- ***I Q** (display status of all jobs)
- ***F J=jobno,H** (hold a job)
- ***F J=jobno,R** (release a job)
- ***F J=jobno,C** (cancel a job)

The above inquiry commands only display information about jobs submitted by the node issuing the command. The modify commands only modify jobs submitted by the node and userid/remote id issuing the command.

The installation can provide a user exit (IATUX35) which accepts other commands, or places additional restrictions on the commands listed above. This user exit replaces the JES3 standard validation/authorization of the command.

RSCS Authorization

Only the following class "G" commands can be sent to RSCS from another node:

*	Comment for the RSCS operator's console
CMD	Forward command to a remote system for execution.
CPQUERY	Request status information from CP.
MSG	Send a console message to a local or remote system or user.
QUERY	Request system information about a link, file or the system in general.

In addition, the following commands can be used to control a file if the file came from the node which is sending the command:

CHANGE Alter the attributes of a file.
FLUSH Discontinue processing of an active file on a link.
PURGE Remove inactive files from a link's queue.
TRANSFER Change the destination of a file.

The remaining RSCS commands can only be issued by the RSCS console operator or one with remote or link authorization.

POWER Authorization

POWER supports three levels of command authority, which can be specified on a node basis in the NDT. The authority levels are as follows:

NET This is the highest level that can be given to another node. It allows the node to perform many functions without being the owner of a job.

JOB This is the default authority and allows remote operators to issue commands against jobs which originated from, or are destined to that node.[4]

NOJOB This is the lowest level of authorization and only allows certain display commands.

Only the following commands can be issued by nodes having "NOJOB" authority:

PBRDCST Send a message to a remote user.
PCANCEL Status Suppress status displays with PDISPLAY.
PDISPLAY MSG Display "ALLUSERS"-type messages.
PDISPLAY T Display time and date.
PDISPLAY PNET Display network definition table.
PINQUIRE Display status information about TP lines or logical units.

In addition, the following commands can be issued by users with "JOB" authority if the job in question came from the node which is sending the command:

PALTER Job Change attributes of a job.
PCANCEL Job Flush a job in execution or that is printing.
PDELETE Job Delete a job from the queue.
PDISPLAY Job Display a job
PDISPLAY A Display active jobs.
PHOLD Job Put a job in hold state.
PRELEASE Job Release a job from hold state.

See Chapter 4 of *POWER Networking User's Guide* for more details.

---

[4] The "owner" of a job may be changed by specifying a different node on the NOTIFY parameter.

Summary of Operator Commands

Network Management

The following tables provide a general reference of the operator commands available on the various systems. Because of fundamental differences between the systems, commands in the same row may not be identical. Refer to the specific product operations guides listed above for details.

Function	JES2	JES3	RSCS	POWER
Start Lines	$SLNEnnn	---	ENABLE cuu	---
Start Networking (BSC)	$SN,LNEnn	*X,NJE,NAME = node	START node	S PNET,node,,line
Enable VTAM ACB	$SLGNn	+X SNA	NETWORK START	---
Start Networking (SNA)	$SN[,LNEnn],A = applid	+S SNA,NODE=	START node	S PNET,node
Start Transmitters	$SLn.JTm,Ln.STm	*F,NJE,NAME = node, NOHOLD	(5)	PACT PNET,node,TRn
Start Receivers	$SLn.JRm,Ln.SRm	*S,line,RCV	---	PACT PNET,node,RVn
Drain Transmitters	$PLn.JTm,Ln.STm	*F,NJE,NAME = node, HOLD	(5)	N PNET,node,TRn
Drain Receivers	$PLn.JRm,Ln.SRm	*S,line,NORCV	---	N PNET,node,RVn
Drain Lines	$PLNEnnn	*C,line	HOLD linkid DRAIN link	---
Stop Lines Immediately	$ELNEnnn	*C,line,I	STOP link	---
Cancel Line Activity	$CLNEnn	---	FLUSH	F PNET,node
Reset Lines	$ELNEn,LNEm,...	*F,NJE,NAME = node, FORCE	DISABLE/ENABLE cuu	---
Stop Networking	$PLNEn,LNEm,...	*C line	SHUTDOWN	P PNET,node,EOJ
Stop Networking Immediately	$ELNEn,LNEm,...	*C line,I	SHUTDOWN QUICK	P PNET,node
Display Network Connections	$TN	*I,NJE	Q SYS LINKS Q SYS ROUTES	I ALL
Display Nodal Attributes	$TN[n]	*I,NJE,NAME = node	Q linkid Def	I NODE = node
Alter Nodal Attributes	$TNnnn ,A = auth ,P = pw ,S = JR,.. ,H = JR	---	START link ...	PLOAD PNET,ndt
Alter Route Tables	---	*F,NJE,NAME = node, PATH = node2	ROUTE dest to link	PLOAD PNET,ndt
Define Nodes	---	---	DEFINE node	PLOAD PNET,ndt
Trace Line Problems	$TR,ON,ID = +4+5	*S,line,LOG	CP TRACE linkid	S PNET,node,,,, TRACE

Figure 3-6. Network Management Commands

--- No available operator command

---

5 Controlled by transmission algorithms.

File Control

The following table shows the various operator commands that control jobs (SYSIN or SYSOUT, "files" to RSCS) on the various systems. Note that there are also global (**$G..**) commands for JES2 which can be used to control jobs on other nodes. See global commands in Figure 3-4 on page 3-24.

Function	JES2	JES3 (BSC)	RSCS	POWER
Display Network Queues	$DQ,Q = XMT[node] $DQ,R =	*I A,D = NJESND *I U,Q = BDT (6)	QUERY link Q	PDISPLAY XMT
Reorder Network Queues	$TJnnn,P = $TOJnnn,P =	*F U,Q = BDT (6)	ORDER link splid ...	A XMT,job,PRI =
Display Job Routing	$DJnnn $TOJnnn	*I J =	Q FILE splid RSCS	D RDR,job D LST,job
Re-Route Jobs	$RXEQ,D =	*S NJEROUT,...	TRAN link splid TO ...	A XMT,job,NODE =
Re-Route Output	$RALL,D = node $TOJnn,D =	*S NJEROUT,...	TRAN link splid TO ...	A XMT,job,NODE =
Hold Jobs and Output	$HJnnn	*F J = ,H	CH splid HOLD	H XMT[,job]
Release Jobs and Output	$AJnnn	*F J = ,R	CH splid NOHOLD	R XMT[,job]
Cancel Jobs and Output	$CJnnn $PJnnn	*F J = ,C	PURGE splid	C XMT[,job]

Figure 3-7. File Control Commands

Sending Commands and Messages

The following commands are available to system operators to send commands and messages to other nodes.

Function	JES2	JES3	RSCS	POWER
Send Message to Another Node	$DMNn,'msg'	*Z,node,msg	MSG node.RSCS msg	B node,'msg'
Send Message to Interactive User	---	*Z,node.user,msg	MSG node user msg	B node,user,'msg'
Send Command to Another System	$Nnnn;cmd	*T,node,cmd	CMD node cmd	X node,cmd

Figure 3-8. Sending Commands and Messages

---

6 SNA Queues only with MVS/BDT

Chapter 4. End-User's View of NJE

Prerequisite Publications 4-2
NJE Facilities 4-3
Job Transmission 4-5
Job Submission - JES2 4-5
Job Submission from Other Systems 4-12
Execution Node Requirements 4-16
Output Distribution 4-17
Routing Output - JES2 4-18
Routing Output from Other Systems 4-22
Output Transparency 4-24
Output Attributes 4-24
Output Node Requirements 4-28
Receiving Output 4-29
Message and Command Transmission 4-31
Sending Messages 4-31
Sending Commands 4-33
Notification and Tracking 4-35
File Transmission 4-39
MVS File Transmission Facilities 4-39
File Transmission on Other Systems 4-42

This chapter addresses the end-user considerations for using the NJE facility. It is written primarily for the systems programmers responsible for developing installation-specific documentation and guidelines for the end-users.

Prerequisite Publications

The following list is a minimum set for end-users of NJE systems. Where multiple form numbers are referenced, ensure that you have the appropriate one for your installation.

Also see Appendix C, "Bibliography" for a more complete list.

MVS/SP

MVS (JES2 and JES3) end users include TSO users, submittors of batch jobs through local or remote readers, recipients of output through local or remote printer or punches, and programs which use the internal reader facility or Process-SYSOUT subsystem interface.

System operators and RJE operators could be viewed as "end users", but not in this publication. See Chapter 3, "Operator's View of NJE" for their view.

- *MVS JCL User's Guide*, GC28-1349 (Ver. 1) or GC28-1351 (Ver. 2)
- *MVS JCL Reference*, GC28-1350 (Ver. 1) or GC28-1352 (Ver. 2)
- *TSO/E: User's Guide*, SC28-1333
- *TSO/E: Command Language Reference*, SC28-1307
- *TSO/E: Reference Summary*, SX28-0015

MVS end users may also include CICS (DISOSS), WYLBUR or other time-sharing users, but they are not discussed in this publication.

VM/RSCS

VM end users include CMS users and other virtual machines run under control of VM/370 which uses RSCS Networking to communicate with other NJE sites.

- *VM/SP: CMS User's Guide*, SC19-6210
- *VM/SP: CP Command Reference for General Users*, SC19-6211
- *RSCS Networking Operation and Use*, SH24-5058
- *RSCS Reference Summary*, SX24-5135

PROFS users on VM may also use NJE facilities, but are not covered in this publication.

VSE/POWER

VSE end users include ICCF users and anyone submitting batch jobs through local or remote readers, or from other partitions in the VSE system.

- *VSE/POWER Networking User's Guide*, SC33-6140
- *VSE/ICCF Terminal User's Guide*, SC33-6204
- *VSE/ICCF Reference Summary*, GX33-9011

NJE Facilities

Unit of Transmission

In NJE, the unit of transmission is a "job", or everything between a Network Job Header and a Network Job Trailer record. For jobs being transmitted to another node for execution, it is a SYSIN job with associated JCL and SYSIN data. For job output, it is one or more SYSOUT data sets, all from the same job execution.

The following diagram illustrates the format of logical records in an NJE job transmission.

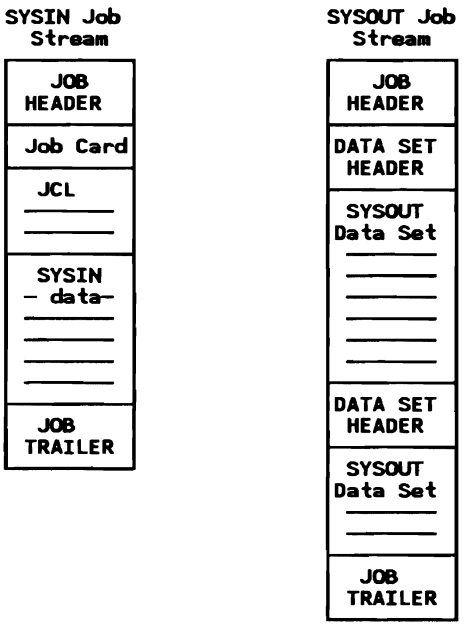

Figure 4-1. Job Stream Transmission Format

Job Routing

SYSIN Jobs may be routed for execution at a remote node. There is no need for the user to know where the node is connected, how the network is configured, or if there is an available path to that node.

See "Job Transmission" on page 4-5 for specific discussions on routing jobs in an NJE network.

Output Distribution

SYSOUT data sets may be routed to any node in the network, and to any remote workstations or interactive users connected to those nodes.

See "Output Distribution" on page 4-17 for specifics.

Message and Command Transmission

NJE protocols provide for messages and commands to be transmitted between interactive users and operators at any node in an NJE network. They are sent as Nodal Message Records (NMRs), which are not generally spooled at intermediate nodes, but get passed through the host without being stored on the spool. The facilities available to send and receive commands and messages differ greatly depending on the system and on the end users involved.

See "Message and Command Transmission" on page 4-31 for specifics.

File Transmission

Although NJE is primarily used for transmitting spool files, many users need to also transmit bulk data such as OS Data Sets. There are basically two different ways to send bulk data: by using NJE, and by using a mechanism external to NJE. The NJE approach usually involves a utility or program at the sending and receiving end to transform the bulk data into and out of spool file format. The other mechanisms do not use the subsystem's spooling system but communicate directly with another copy of itself through a separate BSC link or SNA session.

See "File Transmission" on page 4-39 for specifics.

Job Transmission

SYSIN Jobs may be routed for execution at a remote node. For guest operating systems running under VM/370, a destination of the format "Node.Userid" is permitted. There is no need for the user to know where the node is connected, how the network is configured, or if there is an available path to that node.

The user must:

- be familiar with the control statements on both the submitting (origin) system and the execution (destination) system,
- be able to package the SYSIN stream and tell the origin system where to send the job for execution,
- use the job control language (i.e., JCL and JECL) and standards of the execution node, and
- be aware of the resources required to run the job.

In addition, NJE systems notify the end-user at various points of job transmission and execution. These vary from system to system. See "Notification and Tracking" on page 4-35 for details.

Job Submission - JES2

Jobs submitted on a JES2 system can be sent to other nodes for execution. The execution node can be identified by several mechanisms:

Explicit Routing

*/*ROUTE XEQ or /*XEQ:* The user may code a **/*ROUTE XEQ** or **/*XEQ** JES2 control statement (they are functionally identical) in the job stream.

```
//abc    JOB  xxxxx  (user at origin and execution nodes)
/*ROUTE XEQ nodename
//STEP1  EXEC PGM=...
  .
  .
```

Figure 4-2. JES2 /*ROUTE XEQ Statement. Routing a Job for Execution

The job stream is scanned at the submitting JES2 node. See "Order Dependencies of JES2 Control Cards" on page 4-6 for JECL scanning details.

*/*XMIT:* The user may code a **/*XMIT** JES2 control statement in the job stream.

```
//abc    JOB  xxxxx          (used at origin node only)
/*XMIT  nodename  DLM=$$
//xyz    JOB  yyyyy          (used at execution node only)
//STEP1  EXEC PGM=...
  .
  .
$$
```

Figure 4-3. JES2 /*XMIT Statement

The job stream is not scanned beyond the **/*XMIT** statement at the submitting JES2 node. All of the following card images, up to but not including the delimiter, are sent without any verification, syntax checking or any other validation. Any passwords or other sensitive data within that stream are not removed or encrypted.

If submitted via TSO, TSO/Extensions (TSO/E) must be installed. Otherwise, unpredictable results will occur.

If the job executes at another JES2 node, the job name will be changed to "xyz", but if it executes at a JES3 node, the job name "abc" will be kept (in the Network Job Header).

Note that there are no commas on the **/*XMIT** statement. (Before the fix for APAR OZ74692, a comma was erroneously accepted between the nodename and the DLM parameter.)

Default Routing

If not specified by the mechanisms above, the input device may have a default execution node associated with it. This can be specified on the JES2 READERnn or Rnnn.RDm initialization statement. If not specified, the default execution node is obviously the node on which it is submitted. (JES2 internal readers, however, cannot have a default execution node.)

Job Re-Routing

The operator can also set or change the routing of a job. See "Re-Routing Jobs and SYSOUT" on page 3-22 for details.

In addition, the systems programmer, through installation exits, can also set or change the routing of a job. See "Installation Exits and Modifications" on page 2-39 for details.

Control Card Considerations

Order Dependencies of JES2 Control Cards: JES2 control cards are order-dependent relative to the **/*ROUTE XEQ** (same as **/*XEQ**) control statement. In general, if they are placed *before* a **/*ROUTE XEQ** statement, they will be processed on both the input and execution node. If placed *before* a **/*XMIT** statement, they will be processed only on the input node. If placed *after* a **/*ROUTE XEQ** or **/*XMIT** statement, they are processed only on the execution node.

The following JES2 control statements deserve special mention:

- **/*NETACCT**

  If placed before the **/*ROUTE XEQ** or **/*XMIT** statement, the network account number is carried with the job. If placed after the **/*ROUTE XEQ** or **/*XMIT** statement, it is ignored.

- **/*NOTIFY**

  If placed before the **/*ROUTE XEQ** or **/*XMIT** statement, notifications are directed accordingly throughout the life of this job. If placed after the **/*ROUTE XEQ** or **/*XMIT** statement, notifications are directed accordingly only after the job has been read on the execution node. See "Notification and Tracking" on page 4-35 and "Notification and Tracking" on page 4-35 for details on notifications.

- **/*SETUP**

  The SETUP statement should follow any **/*ROUTE XEQ** or **/*XMIT** statement to keep it from being processed on the input node.

- **/*PRIORITY**

  If placed before the **JOB** statement routed with a **/*ROUTE XEQ** statement, the priority is honored throughout the life of the job (according to the PRTYJECL parameter on the JOBDEF JES2 initialization statement). If placed after an **/*XMIT** statement, it must immediately precede the second JOB statement, and doesn't take effect until the job reaches the execution node. If placed before the first **JOB** statement preceding an **/*XMIT** statement, it becomes the job's priority throughout the life of the job.

- User-defined control statements

  Any JECL statement placed before the **/*ROUTE XEQ** or **/*XMIT** statements which is not acceptable at the input node will cause the job to fail. Any JECL statement placed after the **/*ROUTE XEQ** statement (acceptable or not at the input node) is transmitted with the job. Any card image whatsoever placed after the **/*XMIT** statement (except a delimiter) is transmitted with the job.

For more details, see the MVS/370 JCL manuals, GC28-1349 and GC28-1350 or the MVS/XA JCL manuals, GC28-1351 and GC28-1352.

Internal Reader Control Cards: Internal reader control statements (**/*EOF, /*DEL, /*PURGE** and **/*SCAN**) take effect at the submitting node, but are not transmitted to the execution node. In the case of **/*PURGE**, any output is purged and not sent to the job's print destination. For **/*DEL**, the job output is sent to the job's print destination.

Routing Jobs to a VM Guest-ID

NJE may be used to route jobs to a guest operating system on a VM/RSCS node, even if the guest is not a node in the NJE network. It may receive jobs by having it's virtual reader spooled to RSCS.

Of the above mechanisms to route a job for execution, the **/*XMIT**, **/*XEQ** and **/*ROUTE XEQ** control statements permit a "nodename.vmguestid" to be specified. In this case "vmguestid" is the name of a guest machine running under VM on the "nodename" specified. Operator commands and default reader routing only allow a node to be specified, and not a vmguestid. As the target execution node, JES2 ignores "vmguestid", which is carried in the NJHGXEQU field in the job header.

Operator Rerouting: The JES2 operator may reroute a job to a different node-id, but not to a VM guest-id.

Routing to a Specific System-ID: In order to route a job to a particular system-id in a JES2 multi-access spool complex, either SYSAFF= (affinity) must be coded on the **/*JOBPARM** statement, or a job class structure must be used to control which system executes the job.

Job Attributes

Most of the job attributes are preserved in the network job header (NJH) control block. The NJH is transmitted with the job throughout its life in the network. This is one of the significant differences between NJE and remote job entry, because an NJE network keeps track of all the job-related parameters through eventual output distribution.

The following job attributes deserve special mention:

Network Account Number

Only JES2 and JES3 support this field.

JES2 will use the local account number for the network account number if there is no **/*NETACCT** statement present and no translation due to JES2 **NETACCT** initialization statements.[1]

JOB Password

For security reasons, the password is taken off the job statement at the origin node (replaced with eight blanks) and transmitted in the network job header.

The userid and groupid are placed in the JES2 section of the job header for spool offload operations, but zeroed out for NJE transmissions.[2] At the execution node, the job is forced through validation again if it came from another node regardless of the presence of these fields. (See APAR OY04615.)

---

1 Fixed with APAR OZ60994

2 Function added with APAR OZ81051.

User verification for NJE jobs should normally be done at the execution node. However, RACF authorization checking occurs at the origin or execution node as follows:

- Jobs sent with the **/*ROUTE XEQ** (or **/*XEQ**) statement are verified at the execution node only.
- Jobs sent with the **/*XMIT** statement have their first JOB statement verified at the origin (submitting) node, and their second JOB statement verified at the execution node. (Authorization information is not propagated from the first JOB statement to the second.)

See also "User Identification and Verification" on page 2-13.

Submitting Userid

The name of the user submitting the job is saved in the job header, and is used for sending notification messages and for returning output from the job's execution. The use of NOTIFY may change the user and node's origin identification.

See "Notification and Tracking" on page 4-35 for more information about notification.

Job Priority

A JES2 **/*PRIORITY** statement may be submitted with a job. If the job is submitted on a JES2 node and is placed before a **/*XMIT** statement, the **/*PRIORITY** statement is commented out and the priority is updated in the job header before the job is transmitted to another node. If it comes after a **/*XMIT** statement, it is ignored by JES2 on the execution node unless it immediately follows a **/*XMIT** statement and precedes the second JOB statement.[3]

If the **/*PRIORITY** statement immediately follows a **/*XMIT** statement, it is passed onto the execution node and processed according to the specification of the PRTYJECL parameter on the JOBDEF initialization statement at the execution node.

If the **/*PRIORITY** statement is not present, or if JES2 ignores it, the job priority is determined by:

1. The **PRTY** parameter on the JOB statement (according to the specification of the PRTYJOB parameter on the JOBDEF initialization statement at the execution node), or
2. The estimated execution time as specified on the **/*JOBPARM** statement, or the accounting information on the JOB statement, or
3. An installation-defined default.

---

[3] Fixed with APAR OZ65792.

For a detailed discussion on "JES2 Job Scheduling Priority", see the section by the same name in *JES2 Initialization and Tuning*.

Jobid Assignment

The JES2 jobid is a number that is assigned when a job first enters the system. This number is unique within a JES2 system. The job header always contains the original (input system's) jobid for the life of the job.

When a job is transmitted from one system to another, the receiving system attempts to assign the original jobid (from the job header) to the job that is being received. If this number is currently in use on the receiving system, a jobid is assigned as if the job were being read in locally. A different jobid is also assigned if a part of the original job is already on the receiving system, as may occur with spin data sets. The newly-assigned jobid is not transmitted in the job header, only the original jobid.

Job Transparency

Non-MVS Job Streams: A JES2 intermediate node does not scan any job which is not destined for execution on that node. The **/*XMIT** statement allows the user to submit non-MVS jobs for network transmission. All JES2 syntax scanning stops after an **/*XMIT** statement is encountered within a job at the origin node. Only the data after the **/*XMIT** statement (and before a specified delimiter) is transmitted across the network. Note that a valid MVS JOB statement must precede the **/*XMIT** statement, when submitted on a JES2 system.

The jobname placed in the job header of an 'XMIT' job is the name from the preceding MVS JOB statement. If this name is blanks, JES2 transmits a blank jobname in the job header. All relevant job header information (such as priority and accounting information) is taken from the preceding JOB statement.

Multiple Jobs Between a Header and a Trailer: If JES2 encounters more than one job between a job header and trailer, the job(s) will be flushed with the $HASP110 message.[4]

Errors in JES2 JECL statements: If JES2 encounters an error in JES2 control statements, the remaining records in the job are skipped and the job is queued for output with an error message.[5]

Record Lengths Greater than 80 Bytes: JES2 will store and forward job streams which contain data with a logical record length greater than 80 bytes.[6]

---

4 Fixed with APAR OZ93366.

5 Fixed with APAR OZ51862.

6 Fixed with APARs OZ88264 and OY02269.

Additional Job Header Sections: As an intermediate node, JES2 will add the JES2 and job scheduling sections to the end of the job header if that header does not already contain those sections. JES2 also adds the accounting section to the job trailer during intermediate node processing. This should be transparent to JES2 and other systems and should not affect the processing of the job.

Job Submission - JES3

Explicit Routing: Jobs submitted at a JES3 node are sent to other nodes for execution by using either the **//*ROUTE XEQ** or **// XMIT**control statement. The following JCL stream is an example:

```
//abc    JOB  xxxxx          first job statement
//*NETACCT  ....            (optional)
//*ROUTE XEQ  nodename
//xyz    JOB  yyyyy          second job statement
  .
  .
  .
//
```

Figure 4-4. JES3 Job Example for Transmission

The first job statement and the **NETACCT** and **ROUTE XEQ** statements are stripped off at the submitting node; what is transmitted is the second job statement and whatever follows up to the next job statement or end-of-file. This places the following restrictions on the user who wants to submit jobs from JES3:

- Only one job at a time can be submitted for execution elsewhere.
- Jobs must begin with a valid MVS **JOB** statement.
- Users submitting jobs from TSO must code "**NJB**" in place of "**JOB**" on the second JOB statement. Otherwise, the second job statement will signal the beginning of a new job to TSO submit.

Note that if the job executes at another JES3 node, the job name "abc" will be kept, but if it executes at a JES2 node, the job name will be changed to "xyz" (in the Network Job Header).

To POWER Nodes: Because JES3 requires that the first card after the **//*ROUTE** statement be a valid OS JOB statement, the above example cannot be used to transmit jobs to POWER. With the SNA/NJE enhancement, JES3 supports the **// XMIT** JCL statement which eliminates several limitations present with the **//*ROUTE XEQ** statement. See the latest *JCL Reference* for details and examples.

Without the SNA/NJE feature, see the *VSE/POWER Networking User's Guide* for an example using IEBPTPCH to accomplish the sending of a job from JES3 to POWER.

Operator Re-Routing: With the SNA/NJE enhancement feature, jobs (SYSIN) may be re-routed to another node. Previous versions of JES3 did not allow this.

System Qualifier on JES3: TSO users may be attached to any system in the complex and may submit network jobs and receive status and notify messages. The system qualifier in the job header is used to indicate to which system in the complex the user belongs. When a TSO user submits a job, a value is placed in the job header qualifier field NJHGORGQ. Other nodes may place this value in the NMRTOQUL field in the NMR for status or notify messages.

The value which is used as the qualifier is a number from 1 to 8, which corresponds to the relative position of the Main Processor Control table (MPC) in the MPC chain for the appropriate system.

Multiple Jobs between Headers: Unlike JES2, JES3 accepts multiple jobs in a job transmission (i.e., between the job header and job trailer).

Record Lengths Greater than 80 Bytes: JES3 does not support SYSIN jobstreams or data greater than 80 bytes. The SYSIN data records will be truncated to 80 bytes.

Job Submission - VM

A CMS user uses the **TAG**, **SPOOL** and **PUNCH** commands to send a job to another node as follows:

```
TAG DEVICE PUNCH node-id JOB
SPOOL PUNCH rscs-id
PUNCH filename filetype filemode (NOHEADER)
```

Figure 4-5. CMS Commands for Job Submission

In the above example, 'node-id' is the name of the execution node and 'rscs-id' is the name of the RSCS virtual machine on the submitting node.

The job will be sent by RSCS with the job-name of "RSCSnnnn" where nnnn is the spool file id. JES2 changes the job-name to the name in the **// JOB** statement. JES3 does not.

Cautions

Make sure that the punch device is tagged with the "JOB" attribute. Otherwise the file arrives at the JES2 node in the punch queue instead of the input queue.

Make sure that **(NOHEADER)**, or **(NOH** for short, is specified. Otherwise a ":READ" statement is put in front of the user's job stream and the job will be rejected by JES2, a $HASP110 message issued, and the job will be sent back to the submitter.

Send only one job at a time to JES2 (i.e., one for each PUNCH command) and do NOT spool the punch continuous. Otherwise the job will fail due to a JCL error. (It is alright to send multiple jobs in a file to JES3 Networking.) A circumvention to this is to write a "smart" CMS EXEC which scans for multiple **// JOB** statements and punches each job as a separate file to RSCS. See "Submitting Multiple JES2 Jobs from a Single CMS File" on page B-16 for details.

Only 80-character records could be sent in SYSIN jobs with RSCS Version 1.3. This restriction is not longer true with RSCS Version 2 which can send jobstreams containing records up to 255 bytes long.

Jobid Assignment

The VM Spool file ID is equivalent to the Jobid in other systems. No attempt is made by VM/RSCS to maintain the same spool file ID when it receives a file.

Job Submission - VSE/POWER

For job routing, POWER supports a new parameter "XDEST" on the JOB statement. The format is `* $$ JOB ...,XDEST=nodeid`. This mechanism also allows a job to be routed to a VM userid by specifying the form "`XDEST=(nodeid,userid)`".

For more details, see the following references:

- Section 4.2 in *VSE/POWER Version 2 Networking Design Guide* (GG24-1570-0)
- Chapter 4 in *VSE/POWER Networking User's Guide* (SC33-6140)
- Chapter 4 in *VSE/POWER Installation and Operations Guide* (SH12-5329)

Jobid Assignment: In POWER, the JOBID is a combination of Job Name and Job Number. The POWER job number is a halfword binary number assigned by POWER when the job first enters the system. This number may not be unique within the POWER system. POWER uses the job name as the primary identifier for all system control, and the job number as a secondary identifier.

When POWER receives a job, a new (local) job number is assigned. However, POWER retains the original job number in the job header which is preserved in any further transmissions. The same is true for job output with the exception of segmented (in VSE terms) or spun off output (in MVS terms). In such a case, all segments will get the original job number in order to group all segments together regardless of when they arrived and to make queue manipulation easier. The job name is never changed.

Execution Node Requirements

In general, the user should be aware of the execution environment to which he sends any jobs for execution.

- User Access Authority

  If there is an access control facility like RACF, the user as identified on the JOB statement or in the job header must be defined at the execution node and the proper password supplied.

- Account Numbers

  Installations which use the JES-compatible 4-character account numbers may wish to use the translation services provided by JES2 through the **NETACCT** initialization statements or the **/*NETACCT** control statement. This allows a mapping from one set of local account numbers to another.

- Initiator classes

  The user (JCL coder or programmer) should be aware of what classes are appropriate at the execution node.

- Job Execution Order

  Jobs may get out of order during transmission. Once the jobs arrive at the executing system, any relationship between the jobs (e.g., order of execution) must be controlled by facilities available at that system.

- Procedure Libraries

  All jobs are converted/interpreted on the execution node. Commonly used procedures may need to be copied to other systems for use by a larger set of users.

- Unit Names

  Standardized esoteric names across the network or generic names (e.g., UNIT = 3400-6) must be used.

- Program libraries

- Data Sets

- Catalogs

Any other local standards enforced by IBM or user code (e.g., exits) must also be observed at the execution node.

Output Distribution

SYSOUT data sets can be routed to any node in the network, and to remote workstations or interactive users connected to those nodes.

When routing output to other NJE nodes, the user must be familiar with the destination names and control cards to route it there. The user must also be familiar with the output classes, printer characteristics and output standards on the other nodes.

The end-user is notified at certain points of output transmission. These vary from system to system. See "Notification and Tracking" on page 4-35 for details.

In addition to this section, also see "File Transmission" on page 4-39 for other ways of distributing output.

Unit of Output Transmission: In NJE, a unit of transmission is defined as being everything between a Job Header and a Job Trailer record. It may consist of several Data Sets with different characteristics or destinations.

Two-Level Routing: In NJE, SYSOUT data sets are routed first to a node, and optionally, to a user or remote workstation on that node.

Most MVS interfaces and control blocks, such as the SSOB have only a single 8-byte field for destination name. For this reason, the external writer name is often used to identify the userid as a second level routing specification.

Three-Level Routing: To accommodate a userid on a remote terminal, or a user of an interactive subsystem such as CICS, use private protocols. This is often done by placing the userid in the first data record of the file to be transferred.

Routing Output - JES2

Jobs executed under JES2 can have their output sent to other nodes for distribution. The output node may be identified by several mechanisms:

Explicit Routing

There are a number of ways to route output to another node. Below is an overview of the different statements. Refer to the JCL Manuals for more specific information.

*/*ROUTE Statement:* Code a **/*ROUTE PRINT** or **/*ROUTE PUNCH** control card in the job stream to route all SYSOUT data sets for the job. This overrides any default routing for the reader (see below) and becomes the default routing for all print or punch SYSOUT data sets in the job. (The routing of individual SYSOUT data sets can be overridden if specified on a **DD** or **OUTPUT** JCL statement or on a **/*OUTPUT** JES2 control statement.) Only one destination can be specified on the **/*ROUTE** statement.

The **/*ROUTE** statement also establishes 'job ownership' which is important in JES2 command authorization-checking. (See the discussion on remote command authorization in "JES2 Authorization" on page 3-33.)

DD JCL Statement: The user may code **DEST** on the **// DD SYSOUT** JCL statement. If the form **(nodename,userid)** is used, the **writer-name** cannot be specified.

OUTPUT JCL Statement: The user may code **DEST** on the **// OUTPUT** JCL statement. Only one destination can be specified, but multiple (up to 128) **// OUTPUT** JCL statements can be provided for the same set of output data sets, each with a different destination.

*/*OUTPUT Statement:* The user may code up to four destinations in the **DEST** parameter on the **/*OUTPUT** JES2 control statement. Users should be encouraged to use the **// OUTPUT** statement instead of **/*OUTPUT**.

TSO OUTPUT: Use the **DEST** parameter the TSO **OUTPUT** command to specify an output node, or an RJE workstation on this node, but not both. (See "TSO/E Interactive Data Transmission Facility" on page 4-40 for a discussion about a facility to send files to another TSO user.)

Dynamic Allocation: SVC 99 (dynamic allocation) may specify a destination of another node or an RJE station on this node in the DALSUSER text unit, and optionally a user-id in the DALUSRID text unit. If DALSUSER is an actual JES2 remote name (e.g., Rnnnn), then DALUSRID is ignored. See *MVS Job Management* GC28-1303 or *MVS/XA System Macros and Facilities, Volume 1* GC28-1150 for details.

With TSO/E Release 3, the **ALLOCATE** command supports 2-level (nodeid.userid) destinations.

Internal Reader Job Output Routing: If the job is submitted through an internal reader, the default print and punch destination for the job(s) may be specified by the **DEST** parameter on the **// DD SYSOUT** JCL statement for the internal reader.

Special Local Routing: JES2 only supports special local routing on the "local" node. These "Unnnn" routecodes are not supported in conjunction with nodal routecodes. Symbolic destinations can be defined on the target node to translate the routing of output to special local route codes with the **DESTID** initialization statement. See the example below and "Symbolic Destinations" on page 4-21.

At the Origin or Execution Node, code the following on an **OUTPUT** statement:

```
//  OUTPUT DEST=TARGNODE.MYPRINTR
```

At TARGNODE, have a symbolic destination defined in JES2 initialization parameters:

```
DESTID  NAME=MYPRINTR,DEST=U23
```

Multiple Copies or Destinations: Using NJE, a single copy of a SYSOUT data set may be sent with multiple data set headers to optimize transmission of the same data sets to multiple destinations. (Each destination can also have different SYSOUT characteristics.)

The following diagrams illustrate multiple data set headers for a single data set for "fan-out" and "drop-off". In this example, the same **SYSPRINT** SYSOUT data set is sent to nodes 2, 3 and 4. This can be accomplished with either of the following sets of JCL/JECL statements:

```
/*OUTPUT code DEST=(N2,N3,N4)
//SYSPRINT DD SYSOUT=(A,code)

         - or -

//OUTN2  OUTPUT  DEST=N2
//OUTN3  OUTPUT  DEST=N3
//OUTN4  OUTPUT  DEST=N4
//SYSPRINT DD SYSOUT=A,OUTPUT=(*.OUTN2,*.OUTN3,*.OUTN4)
```

See the following diagram.

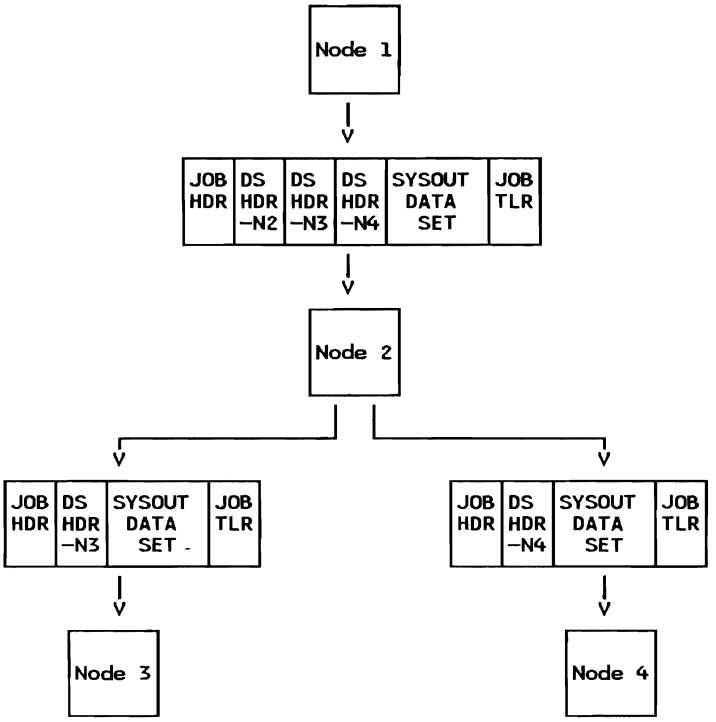

Figure 4-6. Output Fan-Out - JES2

Operator Control: The system operators may also set or change the output destination of SYSOUT data sets. See "Re-Routing Jobs and SYSOUT" on page 3-22 for details.

Default Routing

If not explicitly specified by the user, output is routed according to the following rules:

Reader Defaults: If the job is being submitted through a local or RJE reader, the default print and punch routing are determined by the PRNODE, PRDEST, PUNODE, and PUDEST parameters on the READERnn and Rnnnn.RDm JES2 initialization statements. (Internal readers cannot have default print and punch routing; refer to "Internal Reader Job Output Routing" on page 4-19.)

If not specified by any of the above-mentioned means, the default output distribution is the submitting (origin) node. If submitted from a remote workstation, then the default output destination is the remote on that node. If submitted from a userid on a VM node, however, the default destination routing for output is the system printer on the origin (submitter's) node.

If a node is not explicitly coded in the **DEST** parameter, the default node is the origin, and the output gets routed back to the submitter's node. If "DEST = RMTnnn" is specified in the JCL, the remote workstation is assumed to be on the origin node. If "DEST = LOCAL" is specified in the JCL, the destination is assumed to be the origin node.

Symbolic Destinations

JES2 handles symbolic destination names that are defined by the installation as 'DESTIDs', i.e., aliases for node or node/remote names. For example, an installation can define

```
DESTID NAME=DESTNAME,DEST=N21R17
```

which equates 'DESTNAME' with a routing of node 21, remote 17.

A DESTID can be specified anywhere in JCL that a destination name or userid can be. For example, **DEST=destid** or **DEST=nodename.destid** are allowed on **//OUTPUT** or **/*OUTPUT**, or simply 'destid' or 'nodename.destid' on **/*ROUTE PRINT/PUNCH**. (Destids can also be used on **/*XMIT** or **/*ROUTE XEQ** JCL.)

At the origin node, JES2 will attempt to convert stand-alone destids (i.e., the **DEST=destid** form) BEFORE queueing for transmission. The converted destination node or node/remote is used as the final destination. JES2 will NOT convert a destid within a 'nodename.destid' specification, as it assumes it to be a userid. It will pass the destid as is in the NDHGRMT field of the data set header. (It is possible to code **DEST=destid1.destid2**, in which case destid1 will be converted before transmission and destid2 will get stuffed as is into NDHGRMT.)

Any conversion of destids is always done based on the installation definitions for destids at the node of conversion.

At the destination node, JES2 will attempt to 'interpret' NDHGRMT to determine the routing of the data set. (NDHGNODE is used to determine the destination node.) If NDHGRMT is of the form 'Rmm' OR matches a destid which is an alias for 'Rmm', then the data set will be routed for remote mm. If NDHGRMT is of the form 'NnnRmm' OR matches a destid which converts to 'NnnRmm', then the data set will be routed for remote mm ONLY IF Nnn equals the destination node, otherwise the data set is queued for local printing (or to be picked up by a TSO user if NDHGXWTR is also set matching NDHGRMT). Note that the destids used for comparison in this case are those defined at the destination node. As mentioned above, it is possible for NDHGRMT to contain a destid by specification of DEST = nodename.destid in the origin job's JCL.

Routing Output from Other Systems

Routing Output - JES3

Jobs executed under JES3 may have their output sent to other nodes for distribution. The output node can be identified by several mechanisms:

Explicit Routing: The user may code DEST on the **// DD** JCL statement, or on the **// OUTPUT** JCL statement. Only one destination can be specified, but multiple **// OUTPUT** JCL statements (up to 128) can be provided for the same set of output data sets, each with a different destination.

The user may code up to four destinations in the **DEST** parameter on the **//*FORMAT** JES3 control statement. This will not work with held output. Use the **// OUTPUT** statement for held SYSOUT.

The TSO **OUTPUT** command may use the DEST parameter to specify an output node. A remote terminal or user-id cannot be specified on another node.

With TSO/E Release 3, the **ALLOCATE** command supports 2-level (nodeid.userid) destinations.

Operator Routing: SYSOUT data sets which are on the transmission queue waiting to be transmitted can be re-routed to another node, another userid/remoteid on the same or a different node, or to the local node.

Default Routing: In MVS/SP 1.3.1 and earlier, JES3 set the default output destination to the execution node. Starting with JES3/1.3.4, the default output node is the node on which the job was submitted.

Routing Output - VM

Explicit Routing: To send output to another node, a CMS user can use the **TAG**, **SPOOL** and **PRINT** or **PUNCH** commands similar to sending jobs (see above).

```
TAG DEVICE PRT node-id user-id prty <options ...>
SPOOL PRT rscs-id CLASS c           <options ...>
PRINT filename filetype filemode
```

Figure 4-7. CMS Commands for Sending Output

In the above example, 'node-id' is the name of the destination node and 'rscs-id' is the name of the RSCS virtual machine on the sending system. As part of the **TAG** command, most of the output characteristics can be specified with keyword parameters. Each CMS file is sent separately when multiple **PRINT** commands are issued with the same TAG and SPOOL specifications (as long as you do not spool your printer continuous.)

Several of the **<options ...>**, such as FCB, FORM and FLASH can be specified on both the **TAG** and **SPOOL** commands. See the RSCS Networking publications for details.

To Interactive Users: The **SENDFILE** command may be used instead of the SPOOL, TAG and PRINT or PUNCH commands for simple transmissions with no special attributes. This form cannot be used to send output to a printer or punch for the data must be reformatted with the **RECEIVE** command at the destination. Also, the **NOTE** command may be used to send a "note" to another user. See also "VM File Transmission Facilities" on page 4-42 for other mechanisms.

To MVS TSO Users: By using the writer name (**W=user-id**) on the **TAG** command (in addition to the node-id and user-id), the file may be sent to a TSO user on a MVS node.

Default Routing: If a job is submitted by a CMS user for execution on a JES2 node and the output destination is not specified, the output will be returned to the submitting node, but not to the submitting user-id. The output will be printed by the VM system printer (or punch). **If you want the output returned to the submitting user's virtual reader, explicitly code the destination in the job's JCL.**

Routing Output - POWER

Explicit Routing: At the job level, POWER supports the **LDEST** ("list" or "print" destination) and **PDEST** ("punch" destination) specifications on the **JOB** JECL (Job Entry Control Language) statement. The format is:

```
* $$ JOB  ...,LDEST=(nodeid,userid),PDEST=(nodeid,userid)
```

For print and punch segments of the job, the "DEST = (nodeid,userid)" may also be specified on the **LST** and **PUN** JECL statements.

```
* $$ LST  DEST=(nodeid,userid)
* $$ PUN  DEST=(nodeid,userid)
```

Default Routing: The default routing in VSE/POWER is always the point of origin unless overwritten by JOB parameters or explicitly by the **DEST** parameter in the * **$$LST/PUN** statement. The "point of origin" for an interactive user (ICCF) means that the output stays on spool with a "to" destination of the ICCF user id, so that the ICCF user can look at it and later delete the output or re-route it for printing.

Output Transparency

In general, all NJE nodes spool SYSOUT data in a transparent manner. The objective is to deliver the output, along with its attributes, from the source to the destination without any changes. However, the process of storing them on spool at execution and store-and-forward nodes involves some changes due to differences in output types supported and spooling techniques.

See the specific attributes below and Appendix B of *NJE Formats and Protocols* GG22-9373 for more details.

Output Attributes

The job output attributes are preserved in the network data set header (NDH) control block. The NDH is transmitted with the data set, and is another significant difference between NJE and remote job entry, because a job network keeps track of all the output parameters through eventual output distribution.

The following sections explain how each of the NJE products transmit output and any restrictions to the transparent handling of output data sets.

3800 Attributes

RSCS (Version 2): The best way to originate 3800 files from VM is to define a virtual 3800 printer before you issue the PRINT command. RSCS always turns on the OPTCD=J flag in this case. The user can force OPTCD=J for other virtual printer devices.

When receiving 3800 print files at a VM node, any 3800-specific attributes, or a logical record length (in NDHGLREC) longer than 150 will cause the file to be spooled as a 3800 print file.

FLASH

JES2 and JES3 use "NONE" to specify that no FLASHing is to be done on the 3800, even if the printer is providing a default forms FLASH. RSCS and POWER do not currently understand the special value of "NONE", and wait for an explicit FLASH named "NONE" before printing the output.

BURST

JES2, JES3 and POWER may set and honor the BURST attribute. RSCS does not honor the flag as a print node, but supports it in the TAG command for other systems.

Lines per page

JES2: The **LINECT** parameter on the **/*OUTPUT** card is used to control individual SYSOUT data sets. The value is placed in, and retrieved from, the field NDHGLNCT in the Network Data Set Header if the flag X'04' NDHGF1LC is set in NDHGFLG1. (JES3 does not use this field but lets it default to zero.)

JES3: On the other hand, JES3 uses the OVFL=ON|OFF indicator (bit NDHGF1OV in NDHGFLG1 in the data set header) to specify whether (ON) or not (OFF) to skip to channel one if a channel 12 is sensed in the printer FCB.[7]

RSCS: Neither the above fields or flags are set or used by RSCS.

POWER: Neither the above fields or flags are set by POWER, but the NDHGF1OV flag is used.

Data Set Hold

JES2: See the "Held Output" discussion under "Receiving Output - MVS" on page 4-29. The X'40' bit (NDHGF1HD) in the flag (NDHGFLG1) in the Network Data Set Header is used to indicate that the data set should be held at the destination. The output is not held until it reaches the destination node where it is held regardless of the SYSOUT class definitions at that node.

JES3: JES3 sets the NDHGF1HD flag bit at the execution node and honors it by putting output received with this bit on into a held SYSOUT class.[8]

Print vs. Punch Attribute

JES2 and JES3: On the execution node, JES2 sets the flags NDHGF2PR or NDHGF2PU depending whether the SYSOUT class attribute table for that class specifies print or punch respectively. For received files, the SYSOUT class is used to determine whether it is printed or punched.

RSCS: For received files, this flag field is used to determine whether to send the output to a printer or punch device.

POWER: This flag field is used to determine whether to send the output to a printer or punch device.

Job Copies

JES2 is the only system which sets or uses the job copy count field (NJHGJCPY) in the job header. Therefore, if set on the JES2 node (on the **/*JOBPARM** statement), multiple job copies will not be printed or punched on a non-JES2 node.

Writer-Name

In addition to its use for the name of an MVS external writer, this field is also used by the TSO/E Interactive Data Transmission Facility **RECEIVE** command to get files from JES for a TSO user. It is set by both the TSO/E **TRANSMIT** command and the VM **SENDFILE** and **NOTE** commands.

---

[7] See APAR OZ78140 (closed SUGG) for more information.

[8] Fixed with APAR OZ76793.

See the JCL manuals for restrictions when using this field at the same time as destination userid.

PAGEDEF and FORMDEF

PAGEDEF and FORMDEF names may be associated with the data, regardless of the PAGE or LINE mode of the data itself.

Line mode data can have a 1- to 6-byte PAGEDEF or FORMDEF name associated with it. Information in the PAGEDEF is used to format the data itself, while information in the FORMDEF is used to specify form characteristics, such as data origin on the page, or simplex/duplex or bin selection on the 3820.

The minimum levels required to **specify and print** PAGEDEF and FORMDEF names for line data records are:

JES2	SP/1.3.4 or 2.1.2
JES3	SP/1.3.4 or 2.1.2
VM/RSCS	RSCS Version 2.2 and VM/SP Release 5 or VM/HPO Release 5[9]
POWER	Version 2.3 for specifying, Version 2.2 for printing

The minimum levels required to **store-and-forward** PAGEDEF and FORMDEF names with line data records are:

JES2	SP/1.3.3 or 2.1.1
JES3	SP/1.3.3 or 2.1.1
VM/RSCS	RSCS Version 2.1 and VM/SP Release 4 or VM/HPO Release 4
POWER	Version 2.1

Prior to these levels, the FCB parameter could be used to identify a 4-character PAGEDEF name. (In MVS, this could be an alias.) FORMDEFs, on the other hand, have no equivalent JCL parameter for line-mode printing.

See "Networking Advanced Function Printing Data" on page B-7 and the discussion following on PAGE-mode data for more details.

PAGE-Mode Data

Page-mode, or composed-text data such as GDDM or DCF output formatted for a PSF-controlled printer, contains variable-length spanned records beginning with a **X'5A'** character.

The following minimum levels are required for the transmission of page mode data:

JES2: SP/1.3.3 can store and forward page-mode data. SP/1.3.4 is required to originate or receive and print page mode data.

---

[9] The PSF command may be used to specify PAGEDEFs and FORMDEFs with in VM Release 4 using private protocols.

JES3: SP/1.3.1 can store and forward page-mode data. SP/1.3.4 is required to originate or receive and print page mode data.

RSCS: Version 2.1 can store and forward page-mode data. Version 2.2 is required to originate or receive and print page mode data.

The PSF command can be used to send a file to other NJE nodes for printing. Note the following restrictions with this command:

- VM/PSF installed on Release 4 of VM/SP or VM/HPO can only send output to PSF on another VM node.
- VM/PSF installed on Release 5 of VM/SP or VM/HPO can send output to other NJE nodes supporting AFP, but in-line resources can not be included unless the destination is PSF on another VM node.
- RSCS Version 1.3 cannot send or receive page mode data. RSCS Version 2.1 is required to store and forward page-mode data. RSCS Version 2.2 is required to originate or receive and print page-mode data.
- VM (VM/SP or VM/HPO) Release 5 is required to send or receive page mode data.

See *PSF User's Guide for VM* S544-3512 for more information on the VM PSF command.

POWER: VSE/POWER Version 2.2 can store and forward page-mode data. The same level is required to originate or receive and print page-mode data.

See "Networking Advanced Function Printing Data" on page B-7.

JESNEWS

The JESNEWS data set printed by JES2 during hard-copy processing is not sent to other other nodes. It is only printed with job output on local or RJE printers attached to the node at which the JESNEWS is defined.

Output Node Requirements

Any destination used for SYSOUT processing must have the proper facilities to print, punch display or otherwise handle the output.

Special Devices: Obviously, the appropriate output devices, such as card punches, page printers, diskette writers, microfiche printers, plotters, etc. must be available at the output node.

SYSOUT Classes: If the SYSOUT classes are not standardized across the network (which can be very difficult) they must at least be coordinated and well publicized (especially dummy, held, and punch classes). These characteristics will be referenced (i.e., take effect) on the system to which the output is routed.

Special Forms: Not only must the appropriate forms (paper stock) be available at the output location, but form numbers must also be coordinated.

SYS1.IMAGELIB: Define the required FCB, UCS, and character arrangement tables in the output node's SYS1.IMAGELIB data set. Therefore, IEBIMAGE must be executed at the node where the output is printed.

AFP Resources: The required fonts, page segments, overlays and format definitions must exist in the appropriate libraries at the output node. However, for DCF to properly script a document in APA mode, the DCFINDEX file to define the fonts are required as well as any imbedded page segments (unless the size is explicitly coded).

In general, observe any local standards established by IBM code or user procedures on the output node.

Receiving Output

Notes (electronic mail) as well as SYSOUT files can be sent to interactive users. This section explains how they can be received.

Receiving Output - MVS

There are two ways a TSO user on JES2 or JES3 can receive output data sets, and a third way with SDSF.

Held Output: The TSO **OUTPUT** command can be used to view, print or copy the output if the the jobname is equal to the receiving TSO userid (plus one character),[10] and one of the following rules are met:

1. HOLD = YES was specified on the SYSOUT data set.

2. Output is in a held class and the MSGCLASS was also a held class according to the SYSOUT class attribute table at the execution node.

3. (JES2 only) Output is in a held class and MSGHOLD = NO is specified on the OUTCLASS initialization parameter for that class at the execution node.

The hold indicator is set (bit NHDGF1HD in NDHGFLG1 in the data set header) by JES2 at the execution node and used at the destination node to hold the output.

Transmitted Files: The **RECEIVE** command can be used to display "notes" or copy files to an MVS data set that were sent with the TSO/E Interactive Data Transmission Facility, or some equivalent function such as the CMS **SENDFILE** facility. See "TSO/E Interactive Data Transmission Facility" on page 4-40 for more details.

JES2 Note: Although R, RM and RMT, followed by numerics are valid characters to use for the beginning of a TSO userid, those users will not be able to receive any transmitted files or notes. If used and the SYSOUT is transmitted from another node, JES2 on the receiving node does not distinguish the difference between a userid or remote number.[11]

SDSF Browse: If authorized, a TSO user on JES2 can use SDSF to browse output on spool which is destined for that userid.

---

[10] See TSO exit IKJEF53 and JES3 exit IATUX30 for variations.

[11] See APAR OZ85780.

Files sent to a CMS user are queued in that user's virtual reader. They have the following file-name, file-type, and class based on their origin:

Origin/Sender	FILENAME	FILETYPE	CLASS
CMS SENDFILE	original filename	original filetype	PUN A
CMS NOTE	sender's userid	"NOTE"	PUN A
PROFS NOTE	sender's userid	sender's nodename	PUN A
MVS Batch Job SYSIN	jobname	"JOB"	PUN A
MVS Batch Job SYSOUT	jobname	"OUTPUT"	SYSOUT class
TSO/E TRANSMIT	TSO userid	"OUTPUT"	PUN B
SENDFILE/TRANSMIT Acknowledgement	"Acknowl"	"edgment"	PUN A

Figure 4-8. Filename, Filetype and Class of RSCS Reader Files

While still in the user's virtual reader, they can be 'peeked' (viewed) or discarded with the **RDRLIST** command before they are received.

Each spool file is usually stored on the user's disk as a separate file. If several output data sets are contained in a single job output stream (i.e., between a job header and job trailer), RSCS will attempt to combine them into a single CMS file if the output attributes and logical record lengths are identical.

If the SYSOUT data sets are read into a CMS user's virtual reader and stored as a CMS file (instead of printed by RSCS), all the output attributes are lost.

Message and Command Transmission

NJE protocols provide for messages and commands to be transmitted between interactive users and operators at any node in an NJE network. They are sent as Nodal Message Records (NMRs), which are not generally spooled at intermediate nodes, but are passed through the host without being stored on the spool.

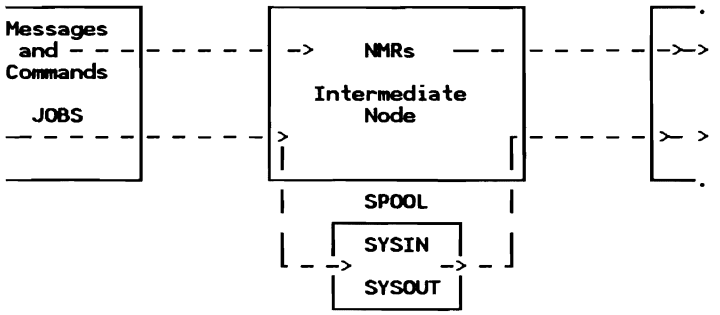

The facilities available to send and receive commands and messages differ greatly depending on the system and on the end-users involved. See "Command/Message Transparency" on page 3-31 for a discussion on how the various systems transmit messages and commands.

Sending Messages

MVS - TSO Users

TSO users cannot send messages or commands to other nodes or users on other nodes. The TSO SEND command only works for users on the same node.

XMIT: With the TSO/E Interactive Data Transmission Facility, the TSO TRANSMIT (or XMIT) command can be used to transmit "notes" to users on the same computer system, or another system connected via NJE. These are actually sent as SYSOUT data sets. and not to be confused with a "message" which NJE systems transmit as Nodal Message Records (NMRs).

Some installations have written TSO command processors and JES2 exits to provide a facility for TSO users to send messages to users on other nodes. See the SHARE JES2 MODS tape for an example (VMSG and EXIT005A on TUCC.NETMODS).

JES2 - Batch Users

To send messages to users on other nodes, JES2 operator commands can be put in the job stream if the installation allows.

To Users on JES2 Nodes: If the target node is JES2, the following job stream can be used as an example to submit commands through the internal reader. (This is not very elegant, but it gets the job done.) This will only work if the installation allows commands to be submitted through the internal reader. (Most installations do not allow this.)

```
//HUTCH3   JOB (6363,D002),'HUTCH',MSGCLASS=Q
/*XEQ target-node
//  EXEC PGM=IEBGENER
//SYSPRINT DD DUMMY
//SYSIN    DD DUMMY
//SYSUT2 DD SYSOUT=(A,INTRDR)
//SYSUT1 DD DATA,DLM=$$
/*$VS,'SEND ''Good morning'',USER=(HUTCH)'
$$
```

To Operators on JES2 Nodes: The same technique can be used to send a message to a JES2 operator on another node. Either leave off the USER= parameter or use the JES2 **$DM** command.

CMS Users

To send messages to users on other nodes, the CMS user can use the **SMSG** or **TELL** commands, or the **NOTE** facility.

SMSG: The **SMSG** command must be directed through the RSCS virtual machine and used in conjunction with the **MSG** command as follows:

```
SMSG rscs-id MSG node-id user-id message-text

- or -

TELL user-id at node-id message-text
```

What you're actually doing is sending the **MSG** command to the RSCS virtual machine, which then sends the message-text to **user-id** at **node-id**. The class G **MSG** command cannot be used directly because that form does not support a link or node identifier.

TELL: The CMS **TELL** command (which actually uses the above form of the CP **SMSG** command) can also be used to send messages to users on other nodes.

With RSCS Version 2.2, messages sent to another node will have only the NMRFLAGT (time-sharing user) and not the NMRFLAGW (workstation) flag set. This way they are displayed by JES2 to TSO users.

NOTE: The **NOTE** command can be used to transmit "notes" to users on the same computer system, or another system connected via NJE. These are actually sent as SYSOUT data sets (VM PUNCH files). It can use the NAMES file for nicknames.

VSE

VSE ICCF users can send messages to users on other nodes with the **/CP** command.

Sending Commands

Sending commands to other systems is not generally supported for the end-user, although there are some "work-arounds" available.

MVS - TSO Users

TSO users cannot directly send commands to another node without submitting a batch job (see below).

The **STATUS**, **CANCEL** and **OUTPUT** commands only work with the local JES system. The TSO user will either have to wait for the job to return to his node, or ask the operator to use a system command to display or control the job on another node.

JES2 - Batch Users

The following jobstream is an example of a technique that can be used to send commands to another JES2 node, assuming the internal reader on the target node allows that level of command authority. (Most installations do not allow this.)

```
//HUTCH    JOB  ...
/*XEQ     target-node-id
//         EXEC PGM=IEBGENER
//SYSPRINT DD   DUMMY
//SYSIN    DD   DUMMY
//SYSUT2   DD   SYSOUT=(A,INTRDR)
//SYSUT1   DD   DATA,DLM=$$
/*$DSPL,ALL
/*$VS,'D A'
$$
```

Figure 4-9. Jobstream to Send Commands to JES2 Node

The responses to these commands are not returned to the TSO user, so the user must logon to the target system and use SDSF to examine the log (if so authorized).

To send commands to a secondary JES2 system, use the form **/*$VS,'!jes2-cmd'** where the "**!**" is set by the RDRCHAR parameter of the CONDEF initialization statement on the secondary subsystem.

See "Sending Commands from JES2" on page 3-29 for system operator facilities for sending commands.

VM - CMS Users

To send a command to another system, use the **SMSG** command to direct the RSCS machine to route it to the remote node.

```
SMSG rscs-id CMD node-id command-text
```

The "**CMD**" command is not available to general users. Therefore, it must be sent via a **SMSG** command to the RSCS virtual machine which will, in turn, send the command to the "node-id" requested.

VSE/POWER - ICCF Users

If they have the proper authority, ICCF users can issue the **/CP** command to issue VSE/POWER commands.

Notification and Tracking

As a SYSIN or SYSOUT job is routed through an NJE network, notification messages are sent to the origin node and userid (or designate) at various points depending on the system type. The following sections list the notifications sent by each system.

Once a job has left the submission node, the end-user cannot generally display the job's status or control it. The end-user must place a telephone call or send a message to the system operator who can display or control jobs on remote nodes.

JES2

SYSIN Jobs: When a job is first read in by JES2, the TSO userid for notification is stored in the job header if 'NOTIFY' was specified on the **JOB** statement or a JECL **/*NOTIFY** statement was included in the job. The originating node name is also stored in the job header, but can be overridden by the **/*NOTIFY** statement.

JES2 sends notification messages at the following times during SYSIN job transmission and execution, assuming that NOTIFY was specified:

- Job transmitted from its origin node for execution on another node ($HASP526)
- Job received at intermediate and execution nodes ($HASP122)[12]
- Job completes execution, is cancelled or terminated ($HASP165)

SYSOUT Jobs: When any of the job's output data sets reach the destination node, the destination SYSOUT receiver issues a message ($HASP546) to the TSO userid specified in the job header. This notification message is sent to the job's origin node, indicating where the job's data sets were received.

TSO Received Files: For files transmitted to him by TSO/E **TRANSMIT** or CMS **SENDFILE**, the user is notified of the arrival of those files if JES2 Exit 13 has been implemented accordingly. Sc "MVS File Transmission Facilities" on page 4-39 for details.

TSO Commands: The TSO **STATUS**, **CANCEL** and **OUTPUT** commands are only operative if the job is on the same node as the TSO user.

JES3

The following notifications are sent by JES3.

---

[12] Added for intermediate nodes with APAR OZ84814. See also OY04055.

SYSIN Jobs: JES3 sends notification messages at the following times during SYSIN job transmission and execution if the job header contains a notify userid:

- Job transmitted (forwarded) to another node, including intermediate nodes. (IAT9199)
- Job received at the execution node (IAT9140)
- There is no notification when the job completes execution, but the IAT7090 message is sent when output from the execution of the job is queued for transmission, which may be about the same time.

With SNA (i.e., MVS/BDT), only the IAT9140 notification is sent. (Job arrives at execution node.)

SYSOUT Jobs: JES3 sends notification messages during job output transmission:

- Output queued for transmission at the execution node (IAT7090)
- Output transmitted (forwarded) to another node, including intermediate nodes (IAT9199)
- Output received at the destination (IAT9141)

With SNA (i.e., MVS/BDT), only the IAT9141 notification is sent. (Output arrives at the destination node.)

TSO Received Files: With JES3 exit IATUX42, TSO users may be notified with the IAT9154 message when files arrive for them from TSO/E TRANSMIT or CMS SENDFILE.

RSCS

RSCS sends notification messages to the sender at the following times during file transmissions:

- File queued for transmission at the ongin node (DMTxxx101I)
- File successfully transmitted on a link, including intermediate nodes. (DMTxxx147I)

Also, a message is sent to the target VM user when a file is spooled to the user's reader.

POWER

SYSIN Jobs: When a job is first read in by POWER, the node and userid for notification are stored in the Job Header Record if **'NTFY='** was specified on the **JOB** card. This means that if a node, other than the originating node, is to be notified, then the originating nodeid is destroyed by the notify node name.

POWER notifies the "notify user" at the following times:

- Job transmitted to another node (1RA0I)
- Job completes execution or is abnormally terminated (1Q5DI)

SYSOUT Jobs: POWER notifies the "notify user" at the following times:

- Job's output transmitted to another node (1RA0I)
- Job's output received at the destination node (1RB5I)

Any abnormal termination of a job's output transmission is only recorded at the system console.

Summary of Notification Messages

Below is a table summarizing the various notification message-IDs sent by NJE systems to the submitting, or "Notify" user. See also Figure 3-1 on page 3-15 for a summary of operator messages issued for job transmissions.

Event	JES2	JES3	RSCS	POWER
SYSIN Jobs				
- Queued for Transm'n at Origin Node	-	-	DMTxxx101	-
- Transmitted from Origin Node	$HASP526	IAT9199	DMTxxx147	1RA0I
- Transmitted from Intermed. Node	-	IAT9199	DMTxxx147	1RA0I
- Received at Intermed. Node	-[13]	-	-	-
- Received at Execution Node	$HASP122	IAT9140	-	-
- Ended Execution	$HASP165	-	-	1Q5DI
SYSOUT Jobs				
- Queued on Execution Node	-	IAT7090	DMTxxx101	-
- Transmitted to Next Node	-	IAT9199	DMTxxx147	1RA0I
- Received at Destination Node	$HASP546	IAT9141	-	1RB5I
Arrival of NETDATA Files - to Destination User	$HASP549 (14)	IAT9154 (15)	DMTxxx104	n/a (16)

Figure 4-10. Notifications Sent by System

---

13 See APAR OY04055.

14 Requires that JES2 Exit 13 set RC=8.

15 Requires JES3 Exit 42.

16 POWER (ICCF) users may not receive NETDATA files.

For RSCS, note that there is no distinction between SYSIN and SYSOUT files. Here the term "Execution Node" for SYSOUT files implies the "Sending Node".

File Transmission

Although NJE was designed for transmitting spool files, many use it to transmit a variety of other data objects including bulk data. There are basically two different ways to send bulk data: by using NJE, and by using a mechanism external to NJE.

NJE Facilities The NJE approach usually involves a utility or program at the sending and receiving end to transform the bulk data into, and out of, spool file format.

Non-NJE Facilities The other mechanisms do not use the subsystems spooling system or NJE, but communicate directly with another copy of itself through a teleprocessing access method.: OS data sets or CMS files may be sent between nodes many different ways. The most appropriate method is dependent on the following factors:

1. File organization, record format and length of the data sets,
2. Size of the file,
3. What SCP and program products are available at the sending nodes,
4. Who is initiating the transfer (e.g., interactive user or batch job),
5. What SCP and program products are available at the receiving nodes, and
6. Who the recipient is.

Physical Transportation Mechanisms: Don't forget the old-fashioned method of sending reels of tape through the mail. One liability of NJE is that it can be very easy to misuse by sending enormous amounts of data to another node's location. It is very easy to use the NJE facilities, but the impact on intermediate nodes can be devastating if there are no mechanisms to limit the size of files being sent.

The following discussion should help select the right file transmission mechanism. Not all facilities may be available on your system.

MVS File Transmission Facilities

The following mechanisms use NJE for data interchange:

1. TSO/E Interactive Data Transmission Facility Program Product (5665-285, 5665-293)
2. Bulk Data Transfer Program Offering (5796-PKK)
3. File Transfer Program (FTP) Program Product Version 1 (5748-XE6)
4. MVS Utilities (IEHMOVE, etc.)

The following mechanisms do not use NJE, but have their own transmission facilities:

1. MVS/Bulk Data Transfer (MVS/BDT) Program Product (5665-302)

2. File Transfer Program (FTP) Program Product Version 2.2 (5668-932)

In addition, many users have written their own programs to transmit bulk data. The above facilities are discussed below in order.

TSO/E Interactive Data Transmission Facility

The TSO/E Interactive Data Transmission Facility (IDTF) is a set of two commands for TSO/E users to transmit and receive messages, notes, sequential and partitioned data sets to other users on the same system, or another system in the NJE network.

A file sent by the IDTF has an external writer name that is identical to the remote/userid field in the data set header. Each data set is preceded by an internal header. The original records may be any record length, but TSO/E passes the records to JES2 as fixed-length 80-byte records without carriage control.

When this type of file is received at the destination node, JES2 can invoke a user exit (Exit 13) to allow the installation to retain or delete the incoming file. This exit may also change the target userid. Based on a return code from the exit, JES2 issues the $HASP549 message to the TSO user.

If the userid is not valid for this system, either because the userid could not be found or exit 13 deleted the file, the sender is notified with the $HASP548 message.

When the output is successfully received at the destination node the sender is notified with the $HASP546 message. This does not mean that the intended TSO user actually got the data, only that it arrived at the destination node and was successfully stored on the JES2 spool. The TSO/E facility on the receiving node can send an acknowledgement back to the sender when it is successfully received by the TSO user through the use of the RECEIVE command.

For more information on TSO/E, see the following:

- *TSO/E: Command Language Reference*, SC28-1307
- *TSO/E: User's Guide*, SC28-1333
- *TSO/E: Reference Summary*, SX23-0015

There is an equivalent function for VM/CMS users, except that only sequential files may be sent. A single member of a PDS can be sent to a VM user, but "SEQ" must be specified on the TRANSMIT command to cause it to be sent as a sequential file. See "VM File Transmission Facilities" on page 4-42 for more information.

BDT Program Offering

The Bulk Data Transfer program offering runs on any MVS system and has a sending and receiving component. This is primarily for batch users and requires no user or operator interaction on the receiving end.

At the sending end, the BDTXMIT program reads the user-supplied JCL to unload sequential data sets and writes them with JCL to the JES internal reader in 80-byte records. The job-stream has the appropriate **/*ROUTE XEQ** statement for transmission to another node by NJE.

At the receiving end, the BDTRECV program reads the unloaded data set as SYSIN data and rebuilds it on the target system as specified by the JCL submitted with the job on the sending end.

See *BDT Program Description/Operation Manual*, SH20-2088, for more information.

(Some users have modified it to run under CMS on a VM system by changing the logic which scans the TIOT.)

Other Utilities

In addition to the BDT program offering, the following utilities also can unload OS data sets into 80-column (card images) that can be sent to another node as a job stream (SYSIN or SYSOUT) and then rebuilt into a file at the destination.

FTP Version 1: Version 1 of the File Transfer Program allows users to transfer sequential files (on tape or disk) from one installation to another. FTP programs support VSE and MVS operating system environments, so they may be used to transfer files between any NJE systems. See *FTP Program Reference and Operations Manual*, SH12-5342 for details.

MVS Utilities: Much like the BDT program offering mentioned above, utilities such as IEHMOVE may be used to unload MVS data sets, but are more cumbersome than BDT. See "Using OS Utilities to Send Bulk Data" on page B-29 for some examples.

VSE Utilities: The VSE RJE Remote Workstation Program (5746-RC9), along with its predecessors, had a set of File Transfer Utilities which can be used to convert sequential data sets to job streams and back again. These utilities had programs that would run on MVS, VSE and VM systems. For more information, see *Job Networking Facilities*, GG22-9042.

Other File Transfer Products

The following programs do not use NJE to transfer the data, but provide their own transmission facilities:

MVS/Bulk Data Transfer: The BDT/MVS Program Product (not to be confused with the Program Offering above) enables an installation to copy data sets to or from other systems within an SNA network. Data transfers may be initiated by TSO users, system operators and batch programs. This is the recommended way to transfer large amounts of bulk data between MVS systems, but is not supported on other systems.

FTP Version 2: FTP Version 2.2 is a successor to FTP Version 1 and Cross Domain Network Data Transfer. It can be used by MVS, VM and VSE users to transfer sequential and VSAM files between MVS, VM and VSE systems on a SNA network. It does not use NJE facilities, but communicates with other copies of FTP V2.2 via ACF/VTAM sessions.

File Transmission on Other Systems

VM File Transmission Facilities

The following mechanisms are available to CMS users which use RSCS Networking for the actual transmission.

1. SENDFILE facility
2. NOTE facility
3. PRINT and PUNCH commands with Spooled Virtual Devices
4. Bulk Data Transfer program offering (5796-PKK) with modifications
5. Other CMS Utilities like DISK DUMP and VMSG have all been replaced by SENDFILE.

In addition, several users have written their own programs to transmit bulk data. The above facilities are discussed below in order

SENDFILE: This may be used to transmit files to users on the same computer system, or another system connected via RSCS Networking.

Note Facility: This cannot be used to send an existing file, but may be used to create a SYSOUT file (electronic memo) and send it to one or more users.

PRINT or PUNCH Commands with Spooled Virtual Devices: If the file to be sent is already in the format of a print or punch file, then the PRINT or PUNCH CMS command can be used to send it to another node. Spool the virtual printer or punch to the RSCS Networking virtual machine, TAG it with the appropriate destination and attributes, and PRINT or PUNCH the file.

At the destination node, the file will be placed in the virtual reader defined for the target userid, where it can be received with the CMS READ command.

Bulk Data Transfer Program Offering: Modifications are required to run the BDT program offering in a CMS environment. The simplest fix is to delete the instructions which reference the TIOT and handle multiple files.

Receiving Files on VM

The CMS user must be careful to use the appropriate "receive" command when reading files in his reader. The RDRLIST command can be used to "peek" at (view) the files in his reader.

Sending Command	Receiving Command
CMS SENDFILE TSO/E TRANSMIT	CMS RECEIVE
CMS PUNCH or PRINT	CMS READCARD or RECEIVE
CMS DISK DUMP	CMS DISK LOAD or RECEIVE
BDTXMIT P O*	BDTRECV PO *

Figure 4-11. Format of "receiving" Command Based on Sending Mechanism

* Requires a modification to run under CMS.

File Transmission - POWER

VSE/VSAM File Transfer: VSE/SP provides dialogs to transfer VSE/VSAM or VSE/ICCF members to other systems. The program is part of VSE/SP, uses NJE as the transport vehicle and does not have any prerequisites. The program builds a job-stream which contains the VSAM file in 80-byte records and the program which reconstructs the file at the target node.

The user interface is interactive; VSE/SP provides panels for the user to describe which file to send where.

See *VSE/SP Networking* SC33-6180 for details.

File Transfer Program (FTP) Version 1 (5748-XE6): This is supported on both VSE and MVS. FTP basically works by reading the file and breaking it up into a job and placing it on spool (VSE/POWER or JES2) and letting the NJE function transfer the job to the other end where the file will be put back together again.

File Transfer Program Version 2 (5668-932): Version 2 of FTP runs in VSE, VM and MVS. It is a VTAM APPL-to-APPL transmission and does not use NJE at all. The file is read and sent directly through VTAM to FTP at the other end and the file is rebuilt there.

Both versions of FTP should be considered for file transfer. Version 1 is more appropriate for light use and small files, whereas Version 2 is more appropriate for heavy use or large files. See the following section for some comparison charts.

Summary

For MVS to MVS transfers, there are three primary choices:

- MVS/BDT is the most elegant, is available to operators, TSO users and batch jobs. Also, it does not use JES spool or transmission facilities.
- TSO/E Interactive Data Transmission Facility is good for TSO users interchanging files and notes, and for communicating with VM/CMS users.
- FTP Version 2 also does not use spool or NJE transmission. It is supported by MVS (JES2 and JES3), VM and POWER and provides transmission checkpoint/restart.
- BDT program offering is adequate for simple transmissions that can be initiated by batch job submissions if the files are not too large.

For transfers between MVS and VM, most of the files are spool (print or punch) files which can be sent directly with NJE.

For interactive transfers between MVS and VM users, the combination of TSO/E Interactive Data Transmission Facility and VM SENDFILE is best.

For transfers between MVS and VSE, use FTP (either Version 1 or 2).

The following chart may be useful in understanding the above combinations.

		FROM These Systems		
		MVS	RSCS	POWER
TO These Systems	MVS	BDT PO TSO/E MVS/BDT FTP	SENDFILE FTP Ver.2	FTP
	RSCS	TSO/E FTP Ver.2	SENDFILE	FTP Ver.2
	POWER	FTP	FTP Ver.2	FTP

Figure 4-12. Summary of File Transfer Mechanisms

Comparison Chart	MVS/BDT PP	BDT PO	FTP V1	FTP V2	CMS SENDFILE	TSO/E IDTF	VSE/SP File Trans
Program Number	**5662-302**	**5796-PKK**	**5748-XE6**	**5668-932**	**5665-167**	**5665-285**	**5666-301**
Operating Systems							
MVS	Yes	Yes	Yes	Yes	No	Yes	No
VM	No	No	No	Yes	Yes	No	No
VSE	No	No	Yes	Yes	No	No	Yes
File Organizations							
Sequential	Yes	Yes	Yes	Yes	Yes	Yes	No
Partitioned	Yes	No	No	No	No	Yes	Yes
VSAM	No	No	No	Yes	No	Yes	Yes
Transmission Vehicle							
NJE	No	Yes	Yes	No	Yes	Yes	Yes
Private Session	Yes	No	No	Yes	No	No	No
User Interface							
Batch	Yes	Yes	Yes	Yes	No	No	Yes
Interactive	Yes	No	No	Yes	Yes	Yes	Yes
System Operator	Yes	No	No	No	No	No	No
Features							
Checkpointing	Yes	No	No	Yes	No	No	No
RACF Protection	Yes	No	No	No	No	No	No

Compatibility

The only two products in the above list that are compatible with another are CMS SENDFILE and TSO/E Interactive Data Transmission Facility.

Appendixes

Appendix A. Sample Networks **A-1**
BSC Network A-1
SNA Network A-6
Connection in the Same MVS System A-18

Appendix B. NJE Flashes **B-1**

Appendix A. Sample Networks

This appendix contains two sample networks, each with a JES2, JES3, VM and a VSE node. The first network has all BSC connections and the second is all SNA. The third will be a session between two copies of JES2 in the same CPU. They do not show all the parameters that can be specified, such as passwords, but they show a basic set of parameters to help the reader understand the basic interrelations.

BSC Network

Below is a sample NJE network with four nodes (VM, JES3, JES2 and VSE) connected via BSC lines. Note that there are only four lines in the network. The JES2 node is directly connected to every node, and the VM and JES3 nodes are interconnected. This is an arbitrary configuration to show that all nodes don't have to be connected with every other node.

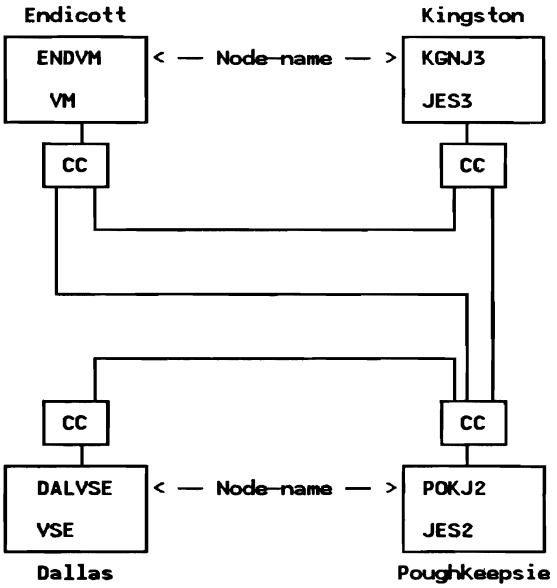

JES2 Initialization

The statements required to define the sample NJE network are listed below.

```
NJEDEF  OWNNODE=2,          /* this Node  */
        NODENUM=4,          /* # of Nodes */
        LINENUM=3           /* # NJE lines*/

TPDEF   BUFSIZE=1152,...    /* Max. NJE Buffer Size */

N1 NAME=ENDVM               /* NJE Nodes  */
N2 NAME=POKJ2
N3 NAME=KGNJ3
N4 NAME=DALVSE

LINE6 UNIT=cua,TRANSP, ...  /* NJE lines  */
LINE7 UNIT=cua,TRANSP, ...
LINE8 UNIT=cua,TRANSP, ...

/* Predefine non-JES2 connections          */
CONNECT NODEA=2,NODEB=1,MEMBA=1,MEMBB=1
CONNECT NODEA=2,NODEB=3,MEMBA=1,MEMBB=1
CONNECT NODEA=2,NODEB=4,MEMBA=1,MEMBB=1
```

Sample JES3 Network Definition

The same sample network shown above with the JES2 parameters would be defined from the JES3 node's perspective as shown in the following section.

JES3 Initialization Statements

```
*-----------------------------
*  NJE NODE DEFINITIONS
*-----------------------------
NJERMT,NAME=KGNJ3,
     HOME=YES,...
*
NJERMT,NAME=ENDVM,
     TYPE=BSC,
     LINE=LN0A3
     STREAM=2,
     BFSIZ=1024,
     MAXLINE=1
*
NJERMT,NAME=POKJ2,
     TYPE=BSC,
     LINE=LN0A4
     STREAM=2,
     BFSIZ=1152,
     MAXLINE=1
*
NJERMT,NAME=DALVSE,
     PATH=POKJ2
*
*-----------------------------
*           NJE LINE DEFINITIONS
*-----------------------------
*           LINE TO ENDVM
DEVICE,
     DTYPE=NJELINE,
     JNAME=LNE0A3,
     JUNIT=(0A3,SY1,TP,ON)
*
*           LINE TO POKJ2
DEVICE,
     DTYPE=NJELINE,
     JNAME=LNE0A4,
     JUNIT=(0A4,SY1,TP,ON)
*
*------------------------  ----
* NJE CONSOLE DEFINITIONS
*-----------------------------
NJECONS,
     SIZE=100
CONSOLE,
     JNAME=NJECONS,
     TYPE=NETWORK
```

Sample RSCS Network Definition

The above network would be defined from the RSCS node's perspective as shown below.

RSCS Network Definition

Configuration File Statements

```
* LOCAL localid

  LOCAL ENDVM

* LINK  linkid   type cuu

  LINK  KGNJ3    NJE  0E3
  LINK  POKJ2    NJE  0E2

* PARM  linkid   parameters

  PARM  KGNJ3    BUFF=1024 ST=1 TA=0
  PARM  POKJ2    BUFF=1024 ST=2 TA=1

* ROUTE nodeid   linkid

  ROUTE DALVSE   POKJ2
```

Operator Commands: As an alternative to the above configuration file statements for the other nodes, the following operator commands can be used.

```
* DEFINE linkid TYPE NJE LINE cua  <Parm parameters>

  DEFINE KGNJ3  TYPE NJE LINE 0E3   P BUFF=1024

  DEFINE POKJ2  TYPE NJE LINE 0E2   P BUFF=1024

* ROUTE  nodeid TO linkid

  ROUTE  DALVSE TO POKJ2
```

Note: Prefix all RSCS commands with 'RSCS' when entered from the RSCS console

Sample POWER Network Definition

The sample network would be defined from the POWER node's perspective as shown below.

POWER Assembly

```
POWER ...
      PNET=NDT1

PLINE  ADDR=X'1A2',TRNSP=YES
```

Network Definition Table (NDT) Assembly

```
NDT1 PNODE  NODE=DALVSE,
            LOCAL=YES

     PNODE  NODE=POKJ2,
            AUTH=JOB,
            BUFSIZE=1152

     PNODE  NODE=KGNJ3,
            AUTH=JOB,
            ROUTE1=POKJ2

     PNODE  NODE=ENDVM,
            AUTH=JOB,
            ROUTE1=POKJ2
```

SNA Network

Below is a sample NJE network with four nodes (VM, JES3, JES2 and VSE) connected via SNA sessions.

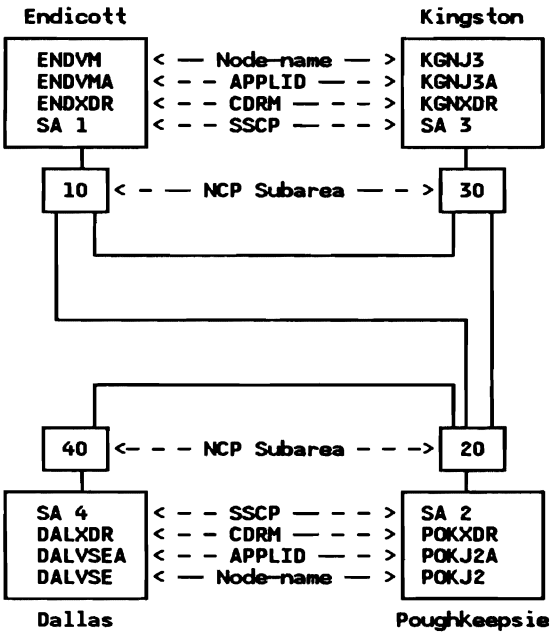

Note that all nodes have a session with all the other nodes except for the VM-to-VSE and JES3-to-VSE combinations. This is arbitrary just to show that all nodes need not have a session with all other nodes in a SNA environment. NJE store-and-forward facilities may still be used with SNA connections.

JES2 Initialization

The statements required to define the sample NJE network are listed below.

```
NJEDEF  OWNNODE=2,          /* this Node  */
        NODENUM=4,          /* # of Nodes */
        LINENUM=3           /* # NJE lines*/

TPDEF  BUFSIZE=1152,...     /* Max. NJE Buffer Size */

N1 NAME=ENDVM,SNA           /* NJE Nodes  */
N2 NAME=POKJ2,SNA
N3 NAME=KGNJ3,SNA
N4 NAME=DALVSE,SNA

APPL NODE=1,APPLID=ENDVMA   /* APPL-IDs   */
APPL NODE=2,APPLID=POKJ2A
APPL NODE=3,APPLID=KGNJ3A
APPL NODE=4,APPLID=DALVSEA

LOGON1 APPLID=POKJ2A        /* VTAM API   */

LINE6 UNIT=SNA              /* NJE lines  */
LINE7 UNIT=SNA
LINE8 UNIT=SNA

/* Predefine non-JES2 connections         */
CONNECT NODEA=2,NODEB=1,MEMBA=1,MEMBB=1
CONNECT NODEA=2,NODEB=3,MEMBA=1,MEMBB=1
CONNECT NODEA=2,NODEB=4,MEMBA=1,MEMBB=1
```

VTAM Network Definition (for JES2)

Without showing all the parameters, the various VTAM parameters and lists used to define the topology of the network and BIND parameters are diagramed below.

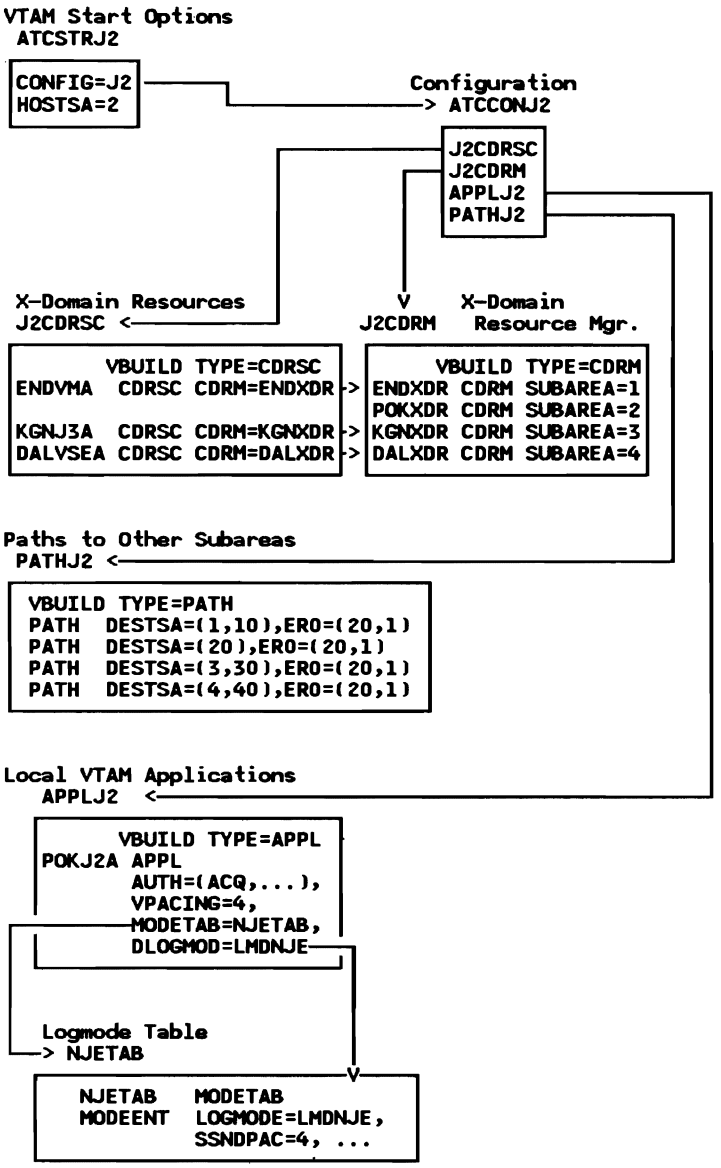
VTAM Start Options
ATCSTRJ2
CONFIG=J2
HOSTSA=2
Configuration
> ATCCONJ2
J2CDRSC
J2CDRM
APPLJ2
PATHJ2
X-Domain Resources
J2CDRSC <
V
J2CDRM
X-Domain
Resource Mgr.
VBUILD TYPE=CDRSC
ENDVMA CDRSC CDRM=ENDXDR
KGNJ3A CDRSC CDRM=KGNXDR
DALVSEA CDRSC CDRM=DALXDR
VBUILD TYPE=CDRM
ENDXDR CDRM SUBAREA=1
POKXDR CDRM SUBAREA=2
KGNXDR CDRM SUBAREA=3
DALXDR CDRM SUBAREA=4
Paths to Other Subareas
PATHJ2 <
VBUILD TYPE=PATH
PATH DESTSA=(1,10),ERO=(20,1)
PATH DESTSA=(20),ERO=(20,1)
PATH DESTSA=(3,30),ERO=(20,1)
PATH DESTSA=(4,40),ERO=(20,1)
Local VTAM Applications
APPLJ2 <
VBUILD TYPE=APPL
POKJ2A APPL
AUTH=(ACQ,...),
VPACING=4,
MODETAB=NJETAB,
DLOGMOD=LMDNJE
Logmode Table
> NJETAB
V
NJETAB MODETAB
MODEENT LOGMODE=LMDNJE,
SSNDPAC=4, ...

Sample JES3 Network Definition

The same sample network shown above with the JES2 parameters would be defined from the JES3 node's perspective as shown in the following section.

JES3 - MVS/BDT Relationship: The figure below show how JES3 and BDT interact. SSI is used for communication between JES3 and MVS/BDT. Jobs and SYSOUT reside on JES3 spool.

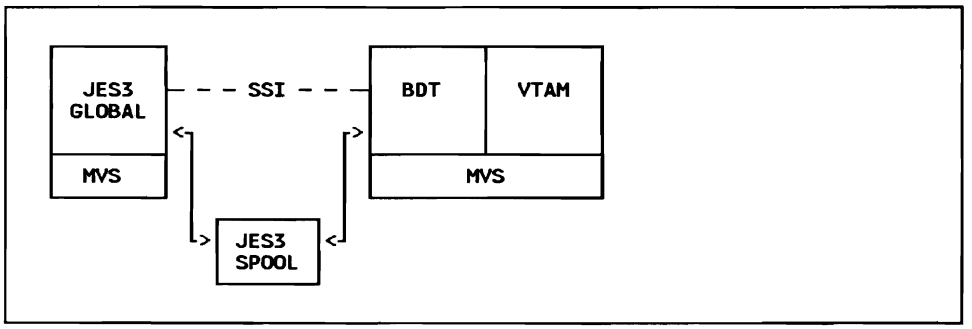

JES3's View of the NJE Network

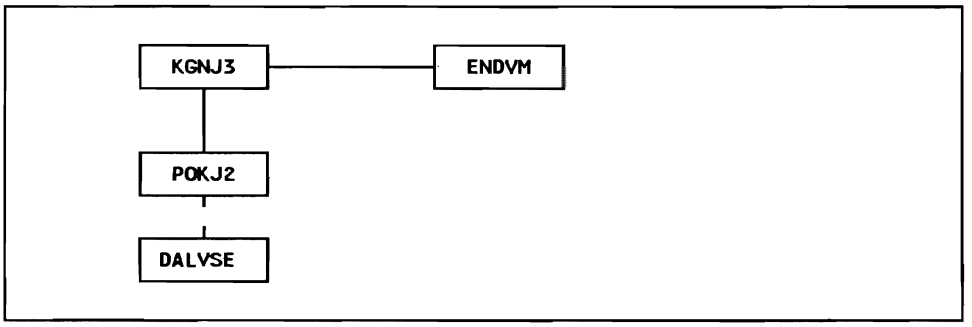

MVS/BDT View of the NJE Network

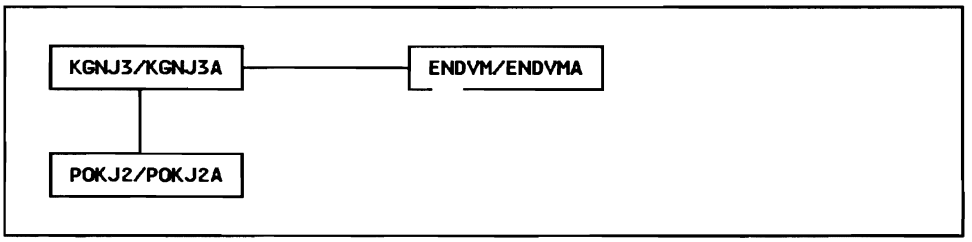

JES3 knows the names of all NJE nodes and the first NJE node in path to the node. BDT knows the node names and application names for all adjacent SNA NJE nodes. VTAM knows about all the network resources, routes, etc.

JES3 Initialization Statements

```
*------------------------------
*  NJE DEFINITIONS FOR  REMOTES
*------------------------------
NJERMT,NAME=KGNJ3,HOME=YES,BDTID=KGNJ3
*
NJERMT,NAME=ENDVM,TYPE=SNA,...
*
NJERMT,NAME=POKJ2,TYPE=SNA,...
*
NJERMT,NAME=DALVSE,PATH=POKJ2
*
*------------------------------
* NJE CONSOLE DEFINITIONS
*------------------------------
NJECONS,SIZE=100
CONSOLE,JNAME=NJECONS,TYPE=NETWORK
CONSOLE,JNAME=BDTDUMMY,TYPE=RJP
*
*------------------------------
*  DEFAULT BDT DEFINITION
*------------------------------
SYSID,NAME=KGNJ3
```

MVS/BDT Initialization Statements

```
*---------------------------------
*              BDT NODES
*---------------------------------
*
* VM NODE AT ENDICOTT
*
BDTNODE,N=ENDVM,
APPL=ENDVMA,
BUFSZ=4096,
LU=05,
TYPE=NJE
*
* JES2 NODE AT POUGHKEEPSIE
*
BDTNODE,N=POKJ2,
APPL=POKJ2A,
BUFSZ=4096,
LU=05,
TYPE=NJE
*
*---------------------------------
*          MVS/BDT SYSTEM ID
*---------------------------------
SYSID,NJENAME=KGNJ3,NJEAPPL=KGNJ3A
*
*---------------------------------
*          MVS/BDT SNA BUFFERS
*---------------------------------
SNABUF,SIZE=4096,
PRI=015,SEC=(015,05),
AUTODEL=YES
```

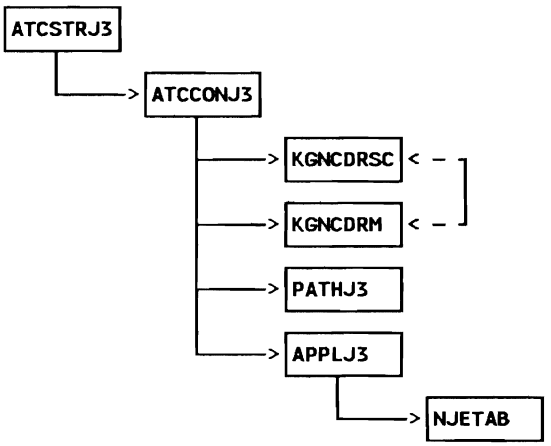

ATCSTRJ3 - VTAM Start Options

```
HOSTSA=3,              <====
  MAXSUBA=63,
  CONFIG=J3,           <====
  CSALIMIT=0,
  ITLIM=0,
  SSCPID=3,
  MAXAPPL=150,
  VTAMEAS=150,
  IOBUF=(350,255,19,,50,50),
  CRPLBUF=(350,,15,,20,58),
  UECBUF=(246,,25,,30,30),
  LFBUF=(150,,0,,10,1),
  LPBUF=(280,,15,,50,50),
  SPBUF=(600,,0,,50,1),
  WPBUF=(246,,0,,10,1)
```

ATCCONJ3 - Network Configuration

```
KGNCDRSC,
KGNCDRM,
PATHJ3,
APPLJ3
```

KGNCDRSC - X-Domain Resources

```
          VBUILD  TYPE=CDRSC
ENDVMA    CDRSC   CDRM=ENDXDR
POKJ2A    CDRSC   CDRM=POKXDR
```

KGNCDRM - X-Domain Res Mgrs

```
         VBUILD    TYPE=CDRM
ENDXDR   CDRM  SUBAREA=1,ISTATUS=INACTIVE
POKXDR   CDRM  SUBAREA=2,ISTATUS=INACTIVE
KGNXDR   CDRM  SUBAREA=3
```

PATHJ3 - Path Definitions: Note that there is not a SNA path to Dallas (SA 4) because we arbitrarily decided to use NJE store and forwarding to reach that node.

```
         VBUILD TYPE=PATH
KGNJ3    PATH  DESTSA=(1,2,10,20,30),
               ER0=(30,1),
               VR0=0
```

APPLJ3 - Local Applications

```
         VBUILD  TYPE=APPL
KGNJ3A   APPL AUTH=ACQ,
              VPACING=2,
              MODETAB=NJETAB,
              DLOGMOD=LMODNJE
```

NJETAB - Logmode Table

```
NJETAB  MODETAB
LMODNJE MODEENT LOGMODE=LMODNJE,
         COMPROT=X'4020',                          (1)
         FMPROF=X'03',                             (1)
         PRIPROT=X'72',                            (1)
         PSERVIC=X'000000000000000000000000',      (1)
         SECPROT=X'72',                            (1)
         PSNDPAC=X'02',                            (2)
         PRCVPAC=X'02',                            (2)
         SSNDPAC=X'02',                            (2)
         RUSIZES=X'0000',                          (1)
         TSPROF=X'03',                             (1)
         TYPE=X'01',                               (1)
         COS=X'00',
         ENCR=X'00'                                (3)

(1) MVS/BDT forces the values as shown.
(2) MVS/BDT does not check these values.
(3) MVS/BDT forces bits 0 and 1 to zero.
```

Sample RSCS Network Definition

The above network would be defined from the RSCS node's perspective as shown below.

RSCS Network Definition

Configuration File Statements

```
* LOCAL localid

  LOCAL ENDVM

* LINK  linkid   type    cu z  cl k  q  dp luname  logmode

  LINK  KGNJ3    SNANJE  *  *  *  *  *  *  KGNJ3A  *
  LINK  POKJ2    SNANJE  *  *  *  *  *  *  POKJ2A  *

* PARM  linkid   parameters

  PARM  KGNJ3    BUFF=1024 ST=1 TA=0
  PARM  POKJ2    BUFF=1024 ST=2 TA=1

* ROUTE nodeid   linkid

  ROUTE DALVSE   POKJ2
```

Operator Commands (an alternative)

```
* DEFINE linkid TYPE SNANJE <LUName name>
*                           <LOGMode name>
*                           <Parm parameters>

  DEFINE KGNJ3  TYPE SNANJE LUN KGNJ3A ...
                P BUFF=1024 ST=1 TA=0

  DEFINE POKJ2  TYPE SNANJE LUN POKJ2A ...
                P BUFF=1024 ST=2 TA=1

* ROUTE  nodeid TO linkid

  ROUTE  DALVSE TO POKJ2
```

Note: Prefix all RSCS commands with 'RSCS' when entered from the RSCS console

VTAM Network Definition (for RSCS)

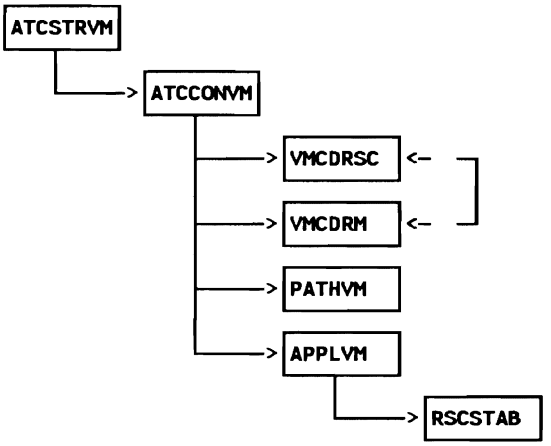

Each list except RSCSTAB resides in 'listname VTAMLST'

ATCSTRVM - VTAM Start Options

```
HOSTSA=1,
CONFIG=VM,
SSCPID=1
```

ATCCONVM - Network Configuration

```
VMCDRSC,
VMCDRM,
PATHVM,
APPLVM
```

VMCDRSC - X-Domain Resources

```
         VBUILD TYPE=CDRSC
KGNJ3A   CDRSC CDRM=KGNXDR
POKJ2A   CDRSC CDRM=POKXDR
```

VMCDRM - X-Domain Resource Managers

```
         VBUILD TYPE=CDRM
ENDXDR   CDRM  SUBAREA=1
POKXDR   CDRM  SUBAREA=2
KGNXDR   CDRM  SUBAREA=3
```

PATHVM - Path Definitions: Note that there is not a SNA path to Dallas (SA 4) because we arbitrarily decided to use NJE store and forwarding through Pokipsy (POKJ2) to reach that node.

```
         VBUILD TYPE=PATH
ENDVM    PATH   DESTSA=(2,3,10,20,30),
                ER0=(10,1),
                VR0=0
```

APPLVM - Local Applications

```
         VBUILD TYPE=APPL
ENDVMA   APPL   AUTH=(ACQ),                    (1)
                AUTHEXIT=YES,                  (1)
                VPACING=n,
                MODETAB=RSCSTAB,
                DLOGMOD=RSCSNJE0

(1) This keyword value must be specified
```

RSCSTAB - Logon Mode Table: RSCSTAB resides in 'RSCSTAB LOADLIB'

```
RSCSTAB  MODETAB
RSCSNJE0 MODEENT LOGMODE=RSCSNJE0,             (3)
      TYPE=X'01',                              (1)
      FMPROF=X'03',                            (1)
      TSPROF=X'03',                            (1)
      PRIPROT=X'72',                           (1)
      SECPROT=X'72',                           (1)
      COMPROT=X'4020',                         (1)
      SSNDPAC=X'nn',                           (2)
      SRCVPAC=X'nn',                           (2)
      RUSIZES=X'0000',                         (1)
      PSNDPAC=X'nn',                           (2)
      PSERVIC=X'000000000000000000000000',(1)
      ENCR=B'0000'                             (1)

(1) RSCS forces the values as shown
(2) RSCS does not check these values
(3) This is a suggested table entry name
```

Sample POWER Network Definition

The sample network would be defined from the POWER node's perspective as shown below. See *VSE/POWER Version II Networking Design Guide* GG24-1570 for some more complete examples.

POWER Assembly

```
    POWER ...
          PNET=NDTSNA
```

Nodal Definition Table (NDT)

```
NDTSNA  PNODE  NODE=DALVSE,
               APPLID=DALVSEA,
               LOCAL=YES

        PNODE  NODE=POKJ2,
               APPLID=POKJ2A,
               AUTH=JOB,
               BUFSIZE=1152

        PNODE  NODE=KGNJ3,
               AUTH=JOB,
               ROUTE1=POKJ2

        PNODE  NODE=ENDVM,
               AUTH=JOB,
               ROUTE1=POKJ2
```

VTAM Network Definition (for POWER)

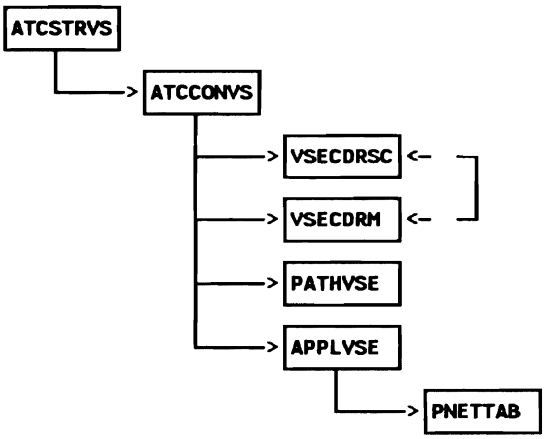

ATCSTRVS - VTAM Start Options

```
HOSTSA=4,
CONFIG=VS,
SSCPID=4
```

ATCCONVS - Network Configuration

```
VSECDRSC,VSECDRM,PATHVSE,APPLVSE
```

VSECDRSC - X-Domain Resources

```
         VBUILD TYPE=CDRSC
POKJ2A   CDRSC CDRM=POKXDR
```

VSECDRM - X-Domain Resource Managers

```
         VBUILD TYPE=CDRM
POKXDR   CDRM  SUBAREA=2
DALXDR   CDRM  SUBAREA=4
```

PATHVSE - Path Definitions: Note that there is not a SNA path to Endicott (SA 1) or Kingston (SA 3) because we arbitrarily decided to use NJE store and forwarding through Pokipsy (POKJ2) to reach those nodes.

```
         VBUILD TYPE=PATH
         PATH  DESTSA=(2,20,40),
               ER0=(40,1),
               VR0=0
```

APPLVSE - Local Applications

```
         VBUILD TYPE=APPL
DALVSEA  APPL  AUTH=(ACQ),
               AUTHEXIT=YES,
               VPACING=n,
               MODETAB=PNETTAB,
               DLOGMOD=PNETNJE0
```

PNETTAB - Logon Mode Table

```
PNETTAB  MODETAB
PNETNJE0 MODEENT LOGMODE=PNETNJE0,
                 SRCVPAC=3,
                 PSNDPAC=3,
                 SSNDPAC=3
```

Connection in the Same MVS System

Below is a sample NJE network between the primary and secondary copies of JES2. They may be the same level of JES2 (and same load modules), or different versions. This connection requires no hardware links or communication controller. It is done wholly through an application-to-application (intra-domain) SNA session through VTAM.

This is a very useful connection when testing out a new version of JES2, or when testing out an NJE network before the hardware or other system(s) are available.

```
                          Pokipsy MVS System
                     ┌──────────────────────────────┐
JES Name .....       │  JES2        │  JESX         │
Node-Name ....       │  POKJ2       │  POKJX        │
Node-Number ..       │  1           │  2            │
Application-ID       │  POKJ2A      │  POKJXA       │
                     │────┬──────────┴──────┬────────┤
                     │    │      VTAM       │        │
                     │    └─────────────────┘        │
                     └──────────────────────────────┘
```

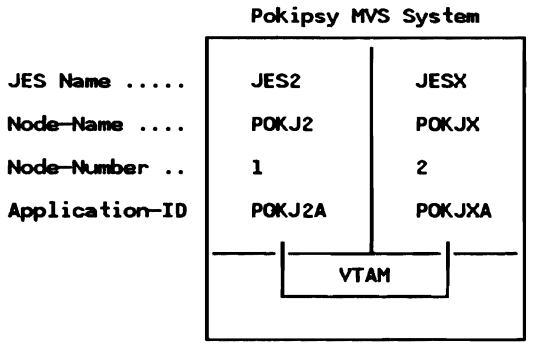

JES2 Initialization

The statements required to define the sample NJE network are listed below.

```
                          Different
   JES2 (Primary)            |          JESA (Secondary)
                             V
┌──────────────────────────┐  ┌──────────────────────────┐
│NJEDEF  OWNNODE=1,        │ * │NJEDEF  OWNNODE=2,        │
│        NODENUM=2,        │   │        NODENUM=2,        │
│        LINENUM=1         │   │        LINENUM=1         │
│                          │   │                          │
│N1 NAME=POKJ2,SNA         │   │N1 NAME=POKJ2,SNA         │
│N2 NAME=POKJX,SNA         │   │N2 NAME=POKJX,SNA         │
│LINE6 UNIT=SNA            │   │LINE7 UNIT=SNA            │
│                          │   │                          │
│APPL NODE=1,              │   │APPL NODE=1,              │
│     APPLID=POKJ2A        │   │     APPL[illegible]=POKJ2A     │
│APPL NODE=2,              │   │APPL NODE=[illegible],        │
│     APPLID=POKJXA        │   │     APPLID=POKJXA        │
│                          │   │                          │
│LOGON1 APPLID=POKJ2A      │ * │LOGON1 APPLID=POKJXA      │
│                          │   │                          │
│CONDEF CONCHAR=$          │ * │CONDEF CONCHAR=.          │
│                          │   │                          │
│SPOOLDEF DSNAME=aaaa      │ * │SPOOLDEF DSNAME=bbbb      │
│                          │   │                          │
│CKPTDEF  DSNAME=cccc      │ * │CKPTDEF  DSNAME=dddd      │
└──────────────────────────┘   └──────────────────────────┘
```

VTAM Network Definition (for JES2)

Assuming VTAM is already installed and operational, the only VTAM list required is for the definition of the two copies of JES2, which is pointed to from the VTAM Configuration member.

APPLJ2

```
      VBUILD TYPE=APPL
POKJ2A APPL  AUTH=ACQ        <— Primary
*
POKJXA APPL  AUTH=ACQ        <— Secondary
```

Other parameters may be specified such as VPACING or MODETAB, but are not necessary at the beginning. Note that the CDRM, CDRSC and PATH members are not required, because there are no other sub-areas involved in this network. (Single-domain)

Appendix B. NJE Flashes

Increasing Throughput between SNA JES2 NJE Nodes B-2
Networking Advanced Function Printing Data B-7
JES2 TP Buffer Size and Virtual Storage Optimization B-12
Submitting Multiple JES2 Jobs from a Single CMS File B-16
NJE Session Initialization B-18
Adding User Sections to NJE Headers (JES2) B-22
Using OS Utilities to Send Bulk Data B-29

Increasing Throughput between SNA JES2 NJE Nodes

This was published in WSC Flash 8703 in 1/87 by Scott Wood (INFO item G21494).

Installations needing increased data traffic between SNA NJE nodes may wish to consider:

1. a second session between single nodes,
2. additional sessions between JES2 sites by using JES2 secondary subsystems. The secondaries may or may not be sharing spool with their primaries.
3. combinations of the above.

These techniques can increase overall throughput by providing access to under-used or additional link capacity. This document discusses the first two techniques. The last is left as an exercise for the reader.

Of course, standard JES2 NJE tuning should precede these steps, including:

- using the largest possible teleprocessing buffer size (3840, or at least 1792) between nodes. See "JES2 TP Buffer Size and Virtual Storage Optimization" on page B-12 for recommendations.
- providing an adequate number of JES2 teleprocessing buffers,
- for SNA lines, using reasonably large, non-zero, pacing and/or VR pacing values,
- providing adequate virtual and real storage for JES2 and VTAM,
- giving JES2 and VTAM high MVS dispatching priority,
- providing consistent tuning parameters at each level of tuning in the SNA hierarchy. (Don't undo the benefits of large JES2 buffers by using small SDLC PIUs, for example.)

Second Session Between Two JES2 Systems

In this method, installations needing increased data traffic between SNA NJE nodes may exploit a subtlety in standard JES2 SNA NJE operation.

In JES2 SNA NJE, the application issuing the $SN,A= to start networking between its node and another SNA node becomes the primary SNA LU. The VTAM ACB JES2 uses for this session is the one identified in the JES2 LOGON1 initialization statement. However, there is nothing to prevent the other JES2 node from initiating a session with a VTAM ACB other than that created by LOGON1. You do this by having the remote SNA NJE JES2 node issue a $SN,A= command, this time naming the JES2 application as the one identified by the LOGON2 statement of the target JES2 node.

An example should help clarify things. Consider Figure B-1 on page B-3.

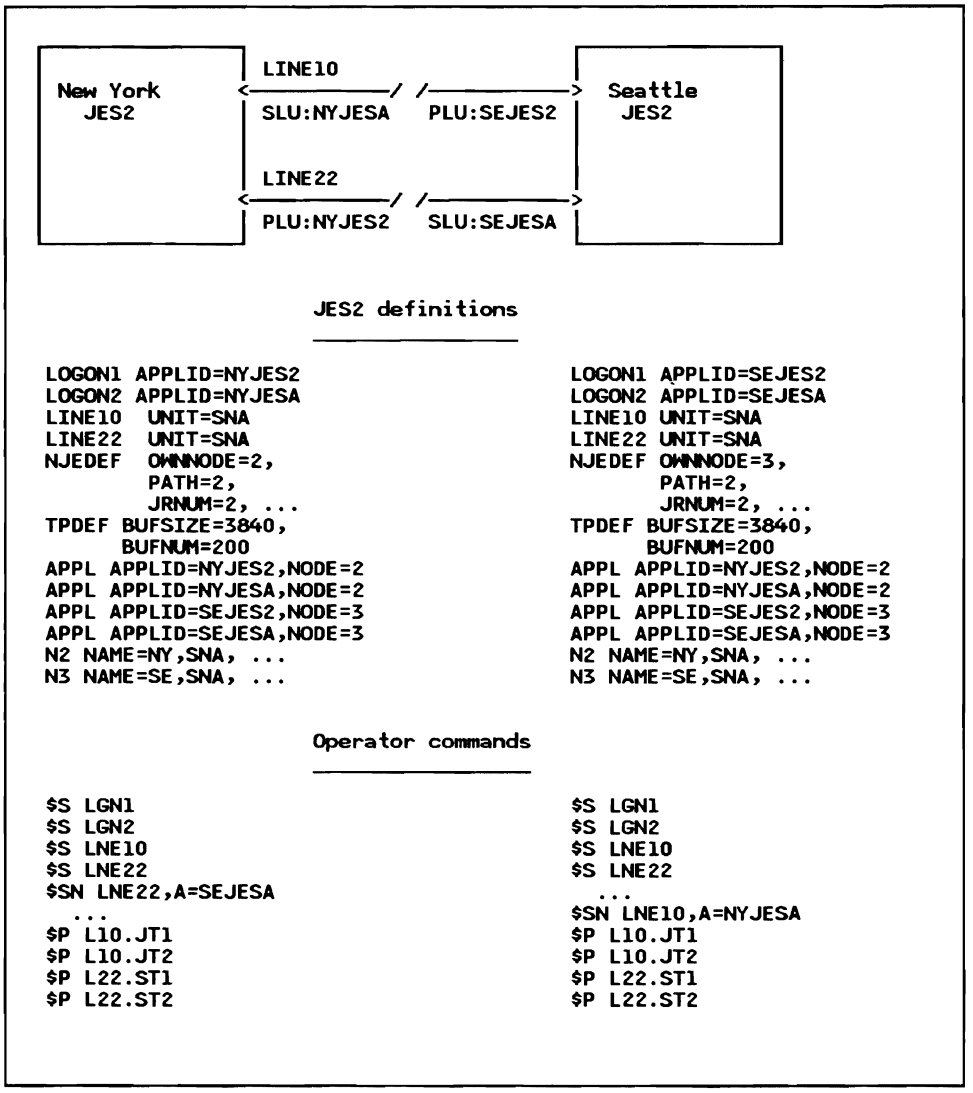

Figure B-1. Two sessions between adjacent JES2 SNA NJE nodes. Some initialization statements are abbr[illegible]ited for clarity. See SC23-0065-3 or equivalent for coding details. See text for comments on the procedure.

Once each node starts its session with the remote's LOGON2 application, there are two sessions between the SNA nodes. Data is sent on a session basis from each node and received on an ACB basis at each node. For NJE JES2 uses the ACB identified by the LOGON1 initialization statement for sends but accepts data from sessions identified by either of the ACBs named by the LOGON1 or LOGON2 initialization statements.

Since both JES2 nodes still have the same JES2 NJE nodenames, routing techniques are the same as with a single session. In fact, there is no way to cause jobs or output to travel on one versus another of the two sessions unless specific job or output transmitters or receivers are drained. So, in Figure B-1, LINE22 is devoted to job sending and receiving and LINE10 is devoted to output sending and receiving; LINE22 will never get SYSOUT and LINE10 will never get jobs.

Since JES2 work selection facilities do not apply to NJE, further selectivity is not possible without modifying JES2 code.

The transmission media can differ unbeknownst to the JES2 applications involved. VTAM CTC, single SDLC lines, or multiple SDLC lines can be used and their related classes of service and pacing values can vary. If the second session used a very high-speed link, for example, you could activate that during periods when line costs were low or when traffic volume required additional capacity.

Some additional comments about the procedure in Figure B-1 on page B-3:

- The 'APPL APPLID= ...' statements are **required** even though these statements may not be defining multi-access spool nodes. The statements are required in order to cause JES2 not to generate VTAM application names using parameters from Nnnnn initialization statements.

- As always, class of service and pacing values will be derived from the logmode table of the secondary LU, i.e., the APPL specified by the LOGON2 statement.

- After session establishment, all NJE transmitters and receivers (ST, SR, JT, JR) are initially in 'started' and 'inactive' status, so the operator only needs to drain what he doesn't want. In our example, if LINE22 at both sides cannot send SYSOUT, then the other side cannot receive SYSOUT on LINE22. The same goes for jobs on LINE10.

- Our example will only work as long as both sides always start LINE10 before starting LINE22. The LINEnnnn with UNIT=SNA started last will be the first LINEnnnn JES2 'randomly' selects for a session request from another node. As long as no other JES2 SNA device (such as an RJE station or another NJE node) grabs either one of these lines, the procedure will work.

- We also must assume that N2 (NY) issues his start-up '$SN,LNE22,A=SEJESA' before N3 (SE) enters his '$SN,LNE10,A=NYJESA'. If N3 issued first, we would have N3/LINE10 connected to N2/LINE22. Then when N2 issued its command, we would get a $HASP679 resource shortage because N2/LINE22 is already being used.

- In view of the order dependencies in starting lines and sessions mentioned in the last three points, if there is no particular need to force jobs onto one LINEnnnn and SYSOUT onto another, consider avoiding the complications by not draining any transmitters and by not coding 'LNEnnnn' in the $SN commands. Performance benefits, if any, will occur without this kind of work selection and operation will be much simpler.

- Don't use the PASSWORD= parameter on the LINEnnnn statement since it is difficult to control which LINEnnnn JES2 will select for an SNA session (see above). If you must use passwords, consider using nodal passwords, i.e., PASSWORD= on the Nnnnn statement.

Performance benefits, if any are obtained at all, are likely to be due to decreased queueing into VTAM from JES2 and the additional capacity from the links

assigned to the second session. **We must emphasize that this environment has not been measured as to virtual or real storage costs or performance benefits. Results which may be obtained in specific environments may vary significantly. Users of this information should verify the applicable data for the specific environment intended.**

Additional Sessions via Secondary Subsystems

In this method, installations needing increased data traffic between SNA NJE nodes use standard JES2 secondary subsystem functions to obtain additional sessions between different JES2 sites.

A secondary JES2 at each of two nodes can be used to increase line utilization and improve node-to-node throughput, assuming link capacity is available and enough CPU cycles and storage is available at each node.

Again, the transmission media can differ unbeknownst to the JES2 applications involved. VTAM CTC, single SDLC lines, or multiple SDLC lines can be used and their related classes of service and pacing values can vary. If the secondary JES2 used a very high-speed link, for example, you could activate the secondary during periods when line costs were low or when traffic volume required additional capacity.

The procedure:

- Define a secondary at each node using the directions and cautions found in SC23-0065-3 under the caption 'Secondary Subsystem Options.'

- Give the secondary a MASDEF OWNSID= value different than the primary, just like a member of a multi-access spool node.

- Give each JES2 at a node a unique VTAM applid. Applids are provided to VTAM based on the LOGONn JES2 initialization parameter. Naturally, provide additional VTAM APPL and CDRM statements at each node.

- Consider routing techniques. The secondary could share spool with the primary and thus select NJE work for transmission and be a target node for remote sites jointly with the primary. Alternatively, the secondary could have its own spool and become the target node for both local (primary) JES2 as well as remote nodes.

  Some possible advantages of the secondary sharing spool with the primary include:

  - simplified routing for users and JES2 systems programmers than would be the case using separate spool

  - no additional nodal definitions needed in the network

  - cleaner management of the additional capacity than might be obtained without using a secondary

  Some possible advantages of having a separate spool for the secondary:

- eliminate checkpoint contention
- even more control of access to this node

All secondaries require virtual and real storage of their own and require operator training if used in daily operations. However, using a secondary offers the possibility of removing from the primary the sometimes high virtual storage requirements for teleprocessing buffers.

- If the primary and secondary JES2 share a common spool, give each JES2 primary and secondary at a given node identical NJEDEF OWNNODE= , N1, N2 ...Nnnnn statements. If the primary and secondary JES2 don't share spool, provide unique NJEDEF OWNNODE= values but identical N1, N2 ...Nnnnn statements.

References

Refer to SC23-0065-3, *MVS/XA SPL: JES2 Initialization and Tuning*, or equivalent for JES2 NJE initialization parameter coding details.

Refer to GG22-9378, *How JES2 Uses SNA for RJE and NJE*, for a general understanding of JES2's use of SNA.

Networking Advanced Function Printing Data

This was published in WSF Flash 8711 in 3/87 by Jill Shindelman.

With the general availability of PSF/VM in December 1986, all three System/370 operating systems now have the ability to use page mode printers. The 3800-3 running in page mode and the 3820 can be attached to MVS, VM, or VSE, and Advanced Function Printing software can run in all three environments.

This wide choice of attachments gives multi-CPU users a great deal of flexibility to create output on any system and send it to a PSF system for printing on a page mode printer. When planning an NJE network where page mode printers are involved, it is necessary to understand the software required to send the data successfully through the NJE network.

Factors associated with networking output data

To determine the levels of networking software required in a particular configuration, three questions must be answered:

- Is line mode or page mode data to be sent?

  Examples of line mode data are traditional computer listings, consisting of fixed-length records not to exceed 255 bytes in length. Common examples of page mode data are GDDM graphic output in page segment or document format, and DCF Release 3 output formatted for a 3820 or 38PP device. These data sets consist of variable-length records that can be up to 32K bytes.

- Are PAGEDEF and FORMDEF names to be associated with the data?

  Line mode data can have a one- to six-byte PAGEDEF or FORMDEF name associated with it. Information in the PAGEDEF is used to format the data itself, while information in the FORMDEF is used to specify form characteristics, such as data origin on the page, or simplex/duplex or bin selection on the 3820. Page mode data is already fully formatted, so a PAGEDEF is not used. However, a FORMDEF can be used with a page mode data set.

- What operating systems are running on the sending, receiving, and intermediate nodes?

  The levels of MVS/JES, VM/RSCS, and VSE/POWER required when networking page printer data may be different depending on where the system falls in the network path taken by the data to be printed. See the following paragraphs for details.

Operating system levels

A detailed description of networking data formats can be found in WSC Technical Bulletin GG22-9373-2, "Network Job Entry Formats and Protocols." The formats illustrated in the -2 version of this manual are fully supported by the operating system releases shown in Figure B-2.

- MVS/SP - JES2 Version 1.3.4 or Version 2.1.2 (these two JES2 releases are identical, and have the same FMID of HJE2330)
- MVS/SP - JES3 Version 1.3.4 or Version 2.1.2 (these two JES3 releases are identical, and have the same FMID of HJS2329)
- RSCS Networking Version 2.2 (to use this version of RSCS with networking of page mode data, you must also have VM/SP Release 5 or VM/SP HPO Release 5, which support page mode data records on the VM spool)
- VSE/POWER Version 2.3

Figure B-2. Operating system levels that support networking of output data. Later levels will also work unless the announcement specifically states otherwise.

The NJE support provided by the operating systems listed in Figure B-2 contains three key elements for users of page mode printers:

1. The data streams sent across the network can consist of variable length records up to 32K in length.

2. The value X'5A' is valid in the carriage control byte position.

3. The networking data set header contains a new "output processing section" that includes a great deal of information about data sets which are intended for printing on page printers under control of PSF. The fields in this section which are of greatest interest to users are those that specify the name of a PAGEDEF and the name of a FORMDEF.

From this it can be seen that if all the systems in the network are at the levels shown in Figure B-2, the user will have no problem sending any type of data from any system to a PSF-controlled page printer on any other system in the network. Certain restrictions apply when earlier levels are used.

Networking line mode data

If traditional line mode data is to be sent to a remote system for printing on a PSF-controlled printer, no special considerations are needed. Since the receiving node will be running PSF, its operating system must be at a level that supports PSF, but the data going across the network looks no different from the traditional 1403 data stream. Sending and intermediate nodes can be at any level that supports NJE.

Networking page mode data

Page mode data, also known as AFPDS format data,[1] contains variable length records up to 32K bytes in length, and each logical record begins with a X'5A' character. This type of data is not supported in early releases of the networking

[1] AFPDS stands for "Advanced Function Printing Data Stream." The AFPDS records are documented in *Print Services Facility Data Stream Reference*, SH35-0073.

products, which could only handle fixed-length records of up to 255 bytes each. Many users wrote special "bridge" programs that de-blocked the page mode data into 80-byte records, and then sent the data across the network along with a job that would re-block the records back to their original format and write them to the spool for printing.

This bridge code is no longer needed once the user is running one of the operating systems listed in Figure B-2.

Associating PAGEDEF and FORMDEF names with line data

It was not possible to associate specific PAGEDEF and FORMDEF names with line data records prior to the releases of software listed in Figure B-2. A partial circumvention that was occasionally used consisted of giving a one-to-four-character alias name to a PAGEDEF, and then specifying the alias name in the FCB parameter associated with the data set. Because of the hierarchy of JCL parameters used by PSF when choosing a PAGEDEF to format a data set, the FCB approach would work. This is true in all three operating systems, at the levels shown in Figure B-4.

FORMDEFs, on the other hand, have no equivalent in JCL used with line mode printing. There is no way prior to the systems listed in Figure B-2 to associate a FORMDEF name with a data set sent across a network for printing.

Associating a FORMDEF name with page mode data

Page mode data sets contain complete formatting information interspersed with the data, so there is no need to refer to PAGEDEF names when printing them. But if a FORMDEF is needed in conjunction with a networked page mode data set, the operating system levels in Figure B-2 must be used on the originating and receiving systems.

VM special case 1: Using PAGEDEF and FORMDEF names with data to be sent across a network

PSF/VM, which supports the page mode 3800-3 and the 3820 in a VM environment, provides the "PSF" command for use in sending data to one of these printers. Among the parameters on the PSF command are those that allow the specification of PAGEDEFs and FORMDEFs to be used when the data is printed.

So long as a user has a single VM system where the PSF/VM software is installed and to which the printers are physically attached, there is nothing unusual about this. But if a VM user wants to send line data across a network and associate a PAGEDEF and FORMDEF name with it, or if the user wants to send page data with a FORMDEF name, there must be some way available to him to provide those names to the network.

In VM, this is done in a new Release 5 control block. Furthermore, it is PSF/VM that stores the PAGEDEF and FORMDEF names into the control block prior to sending them along with the data across a network. As a result, VM/SP Release 5 is the minimum level of this operating system required if the goal is to send the PAGEDEF and FORMDEF names along with the data. And

if this function is to be provided without user additions to VM, the PSF/VM program product must be installed on the sending VM node to provide the user with the "PSF" command where the PAGEDEF and FORMDEF can be named.

If the user does not want to install PSF/VM just to get this function on a system where no page mode printers are attached, he has the option of writing a REXX EXEC to accomplish the control-block-store function instead.

VM special case 2: Sending FORMDEFs or PAGEDEFs along with data in a VM-to-VM network

A unique feature of the PAGEDEF and FORMDEF parameters on the PSF command in VM is that the user can *include the PAGEDEF or FORMDEF itself* along with the data, as an alternative to providing a name which will then be used to retrieve a PAGEDEF or FORMDEF from the appropriate library on the receiving system.

This "inline resource object" function is available only in PSF/VM, so a data stream containing such objects could not be sent to a VSE or MVS system for page mode printing. Such a data stream can, however, be sent to another system running PSF/VM, but only if the sending and receiving systems are at VM/SP Release 5 or VM/SP HPO Release 5 with RSCS Version 2.2.

Summary of data networking considerations in an AFP environment

If only line mode data is being sent across a network, there are no special considerations regarding operating system levels at the sending, receiving, or intermediate nodes. If page mode data is being sent, it is possible to choose any combination of MVS, VM, and VSE operating systems at any node so long as they are at the levels shown in Figure B-3 and Figure B-4.

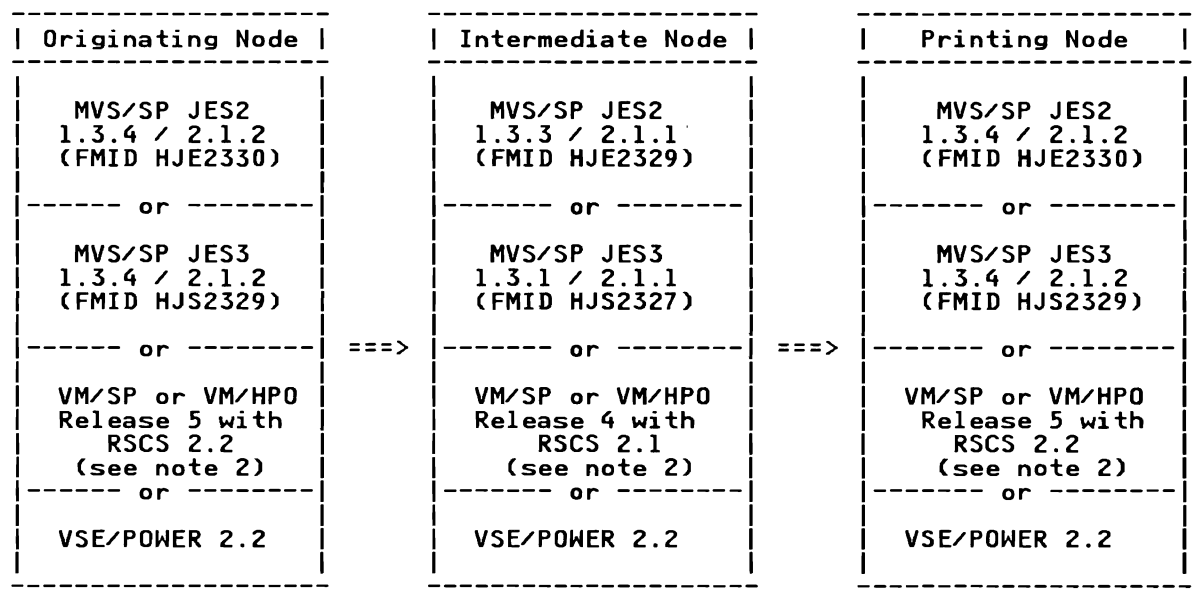

Figure B-3. Minimum system levels that support page mode data networking

Note 2: Earlier versions of RSCS can be used in conjunction with user-written "bridge" code.

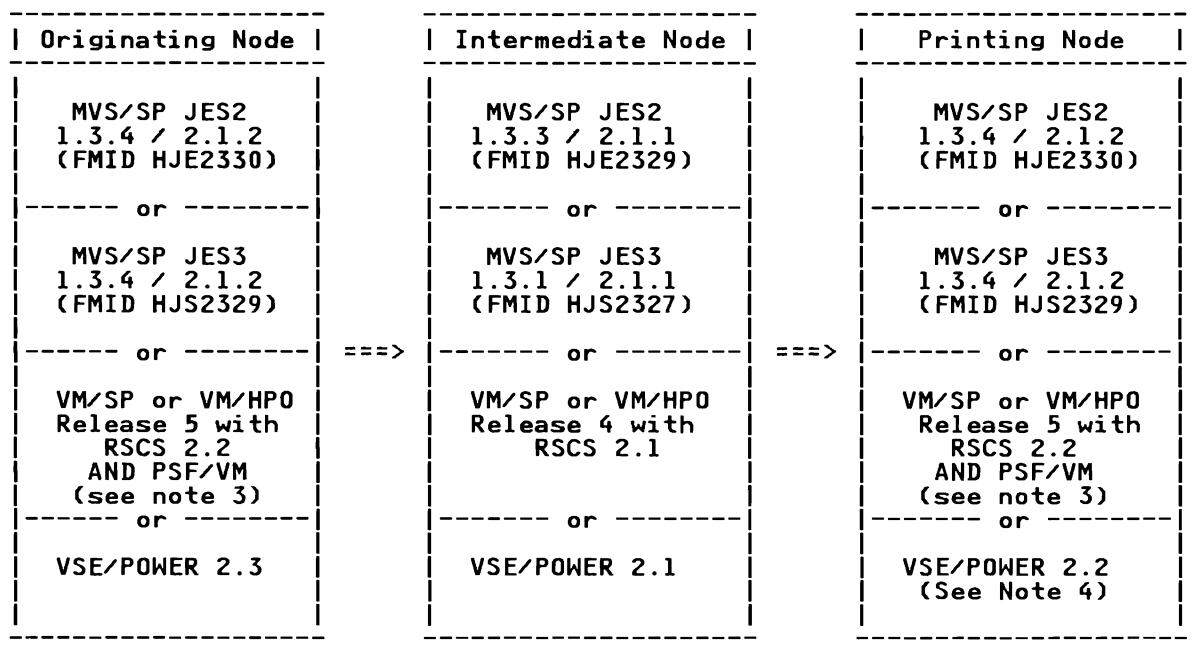

Figure B-4. Minimum system levels required to support networking of PAGEDEF and FORMDEF names

Note 3: As described in the section entitled "VM special case 1," it is possible to write a REXX EXEC for use with VM Release 5 instead of using PSF/VM to store the PAGEDEF/FORMDEF names in the new control block.

Note 4: At least one user has been able to use VSE as a receiving node for PAGEDEF and FORMDEF names passed from MVS. The sender specified FORMS = xxxx on the OUTPUT statement. This was considered by VSE to be an FNO = keyword, and was used to point to a printer parameter member, which specified the desired PAGEDEF and FORMDEF name.

JES2 TP Buffer Size and Virtual Storage Optimization

The JES2 component of MVS/SP JES2 2.1.5 (FMID HJE2215) and of MVS/SP JES2 1.3.6 (FMID HJE1367) changed the lengths of the RPL and IOB prefixes to JES2 teleprocessing buffers, thus changing the length of optimum buffer sizes for virtual storage usage. This flash updates previous flashes on this topic by incorporating best sizes for the JES2/2.1.5 environment.

This article was originally published as *Washington Systems Center Flash* 8608.3 and INFO/MVS item G21301. It was reprinted with minor updates in the appendix of *JES2 2.1.5 Virtual Storage Tuning Guidelines* GG66-0257 by Scott Wood.

JES2 keeps a pool of teleprocessing buffers for RJE and NJE, which are used for both SNA and BSC transmissions. The size of the pool is based on the JES2 initialization parameters TPDEF BUFNUM= (number of TP buffers) and TPDEF BUFSIZE= (TP buffer size.) **If a large number of teleprocessing buffers are specified, care should be taken in selecting the buffer size to prevent excessive virtual storage fragmentation.**

The actual buffers in JES2 memory are prefixed with an RPL or IOB and associated JES2 data so they are (TPDEF BUFSIZE= + (RPL or IOB) + JES2 data) bytes long[2] and will not span a 4K page boundary. Therefore, the size of the buffer pool is equal to the number of 4K pages (each holding an integral number of buffers) required to hold the total number (TPDEF BUFNUM=) of buffers. If TPDEF BUFSIZE= is not adjusted to account for the RPL or IOB size plus associated JES2 data, excessive storage may be wasted in a large JES2 RJE/NJE network.

See the example in Figure B-5 on page B-13 with TPDEF BUFSIZE=2000 and TPDEF MBUFSIZE=400.

[2] The fix for APAR OZ65765 on PUT 8303 (for all levels of JES2) increased the size of the JES2 RPL data at the front of SNA TP buffers by 16 bytes. The fix for APAR OZ79522, incorporated in JES2/2.1.5, and other changes in JES2/2.1.5, changed the size of JES2 RPL data for SNA buffers from 208 bytes to 252 bytes. In addition, the JES2 IOB prefix data for BSC buffers got lengthened from 120 to 136 bytes in JES2/2.1.5.

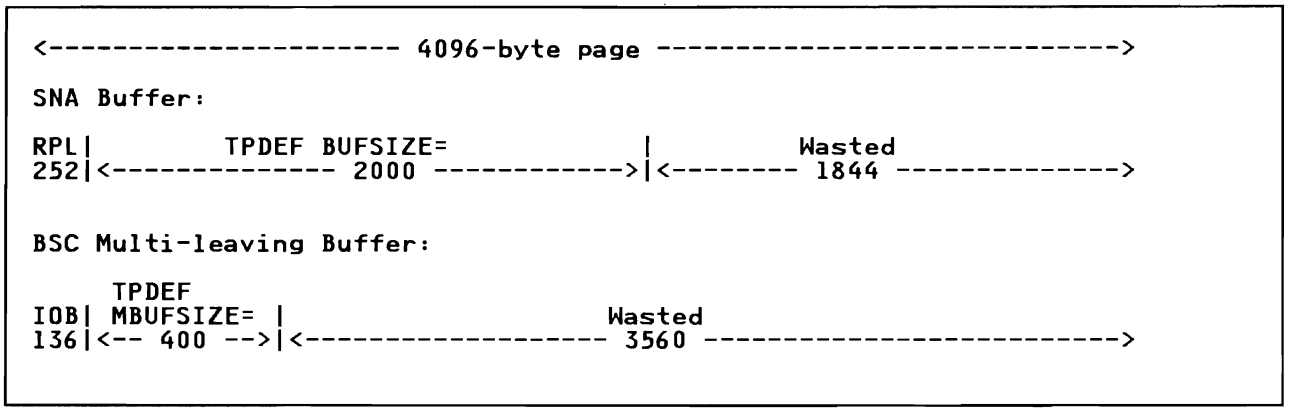

A better example is shown in Figure B-6 with TPDEF BUFSIZE=1792 and TPDEF MBUFSIZE=800. (Note that the parameter BUFSIZE=400 may be specified on the RMTnnnn initialization statement for those multi-leaving remotes which don't have room for 800 byte buffers.)

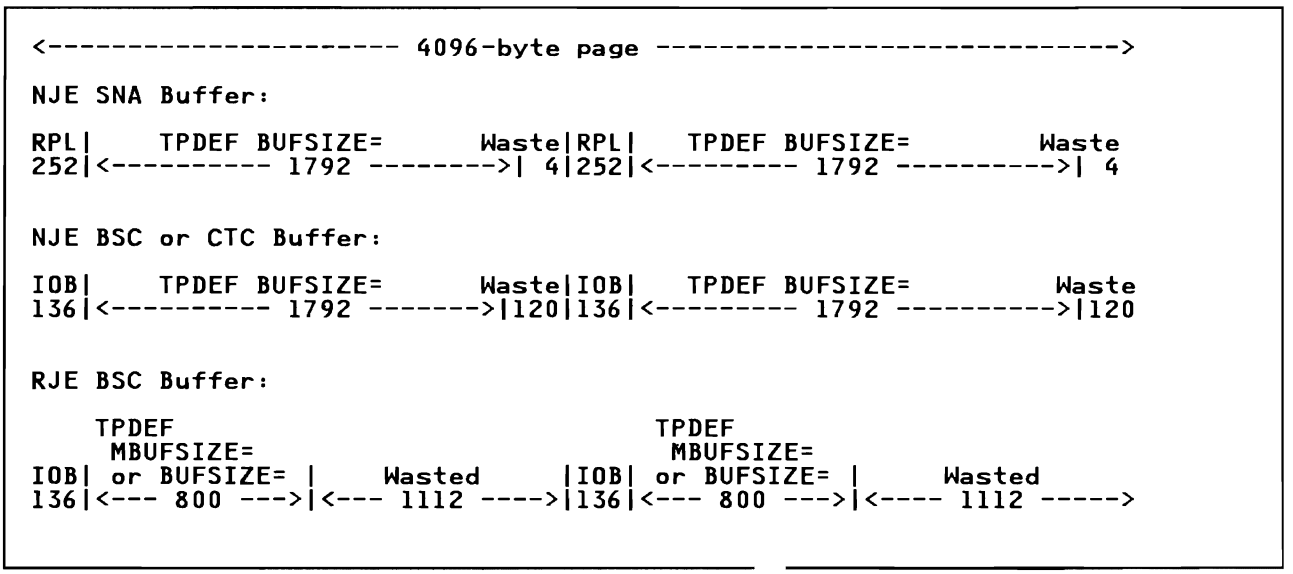

More specifically, the **buffer pool size** is determined by the following logic:

1. The value specified in the TPDEF BUFSIZE= initialization parameter may not be the actual value used by JES2. It is rounded up to the larger of:

   - TPDEF BUFSIZE=,
   - TPDEF MBUFSIZE=,
   - largest BUFSIZE on the RMTnnnn statements,
   - 280 if NJEDEF LINENUM= is greater than 0,

   and finally rounded up to a multiple of 8.

2. Each data buffer in JES2 memory has an RPL prefix for SNA transmissions or an IOB prefix for BSC transmissions. Therefore, the greater of the following (guess which wins) is added to the adjusted TPDEF BUFSIZE= for the storage requirements of ***all*** TP buffers:

   - RPL plus associated JES2 data size (252 bytes for JES2 2.1.5/systems)
   - IOB plus associated JES2 data size (136 bytes for JES2/2.1.5 systems)

   (This is true even if no JES2 SNA lines are defined to JES2.)

3. The above sum is rounded up to a multiple of 8. If the result is over 4096, then 4096 is used.

4. The resultant value for TP buffer size including prefix is then divided into 4096 to determine the number of integral buffers per page.

5. Then the number of pages required for TPDEF BUFNUM= buffers is calculated and a GETMAIN is issued to obtain the memory.

The **'usable' TP buffer size** is finally calculated by subtracting the prefix areas (RPL for SNA, and IOB for BSC) back out.

Figure B-7 shows some examples of buffer sizes for the JES2/2.1.5 environment.

TPDEF BUFSIZE	Number of buffers	Data utiliz'n per page	Comment
3840	1	94%	Maximum
1792	2	86%	Optimum for 2 per page
1112	3	82%	Optimum for 3 per page
768	4	75%	Optimum for 4 per page
564	5	68%	Optimum for 5 per page

Figure B-7. Optimum TPDEF BUFSIZE Values. Prefix sizes used are JES2/2.1.5 values.

To calculate optimum values for TPDEF BUFSIZE= for other numbers of buffers per page, use the following formula:

```
optimum BUFSIZE = (((4096 - (n * v)) / n) / 8 ) * 8
```

where 'n' is the number of buffers per page you want, and where 'v' is:

- 252 for an SNA or mixed SNA and BSC JES2/2.1.5 environment,
- 136 for a pure BSC JES2/2.1.5 environment

The actual transmission data buffer size for the various TP devices is determined as follows:

NJE (SNA, BSC or CTC): The actual transmission data buffer size used is equal to the smaller of the TPDEF BUFSIZE= values for each of the two adjacent nodes. This is calculated independently for each NJE session.

RJE (SNA): The actual transmission data buffer size used is equal to the value specified by the BUFSIZE= parameter on the RMTnnnn initialization statement. Values of 128 up to a maximum of the "usable" TP buffer size as specified on the previous page are allowed. 256 is the default. Some devices, such as 3770's, allow only 256 or 512.

RJE (BSC Multi-Leaving): The actual transmission buffer size used is equal to the value specified by the BUFSIZE= parameter on the RMTnnnn initialization statement (TPDEF MBUFSIZE= is the default if not specified.)

RJE (BSC Hardware): The actual data transmission buffer size used is set according to the following device types:

- 2770: 127, or 264 if BUFEX specified, or 520 if ABUFEX specified
- 2780 (or 3740): 400
- 3780: 520

Submitting Multiple JES2 Jobs from a Single CMS File

It is often convenient to keep several JES2 jobs in a single CMS file. This can simplify maintenance and documentation of logically related jobs (e.g., month end closing).

Spooling such a file to RSCS for transmission across an NJE link is a violation of NJE protocols. Only one job may be represented by a single job header-data-job trailer sequence. When the file is received at a JES2 system the results are unpredictable.

The solution to this problem is to spool each job to RSCS separately, so that each job is properly "wrapped" in a NJE header and trailer. This can be accomplished manually, by a program or an EXEC.

Logic Flow: Whichever method is used, the logic flow is:

```
READ INPUT FILE RECORD
IF NOT JOB CARD THEN ABORT     /* FIRST CARD ISN'T A
                                  JOB CARD - ERROR */
DO UNTIL END-OF-FILE
  DO UNTIL RECORD READ IS JOB CARD
    WRITE WORK FILE RECORD
    READ INPUT FILE RECORD
  END
  PUNCH WORK FILE TO RSCS
END
```

Figure B-8. Logic Flow for Punching Separate Jobs from a CMS File

The decision to use an EXEC, XEDIT macro or a program should be based on ease of implementation and execution time considerations. If the job-streams are small and/or infrequent, the EXEC is easier to implement. On the other hand, a program will run faster.

XEDIT Structure: The following XEDIT macro is intended only as an example - not as executable code.

The macro should position on the first (or only) JOB card and then use subsequent JOB cards or end of file to trigger punching that portion of the file to RSCS.

```
* ACTIVATE THE DON'T CARE CHAR
SET ARBCHAR ON $
ERASE WORK FILE G
L,//$ JOB ,
* NO JOB CARD FOUND
&IF &RC NE 0 &GOTO -E1
-L1
PUT ,//$ JOB , WORK FILE G
IF &RC NE 0 &GOTO -L2
* THIS EXEC WOULD SPOOL, TAG AND PUNCH
* ACCORDING TO LOCAL CONVENTIONS
EX PUNX
&GOTO -L1
-L2
* PUNCH THE LAST JOB
&IF &RC EQ EOF EX PUNX
&EXIT
-E1
&TYPE NO JOBCARD FOUND
```

Figure B-9. XEDIT Macro to Punch Separate Jobs from a CMS File

Program Structure: A program for this purpose could use the CMS file system or the OS simulation macros. Its structure would be very similar to the logic flow shown above. The DIAGNOSE instruction could be used to issue the spool, TAG and PUNCH commands.

NJE Session Initialization

In initiating an NJE session there are two different techniques used at the VTAM API:

1. OPNDST OPTCD=ACQUIRE

2. SIMLOGON followed by OPNDST OPTCD=ACCEPT from the LOGON exit

JES2 and POWER use technique 1. BDT (JES3) and RSCS use technique 2. Number 2 can be used by a single NJE application, allowing the system programmer or the operator to specify whether the node should be PLU or SLU on each connection pair. This is helpful in limiting the number of log mode images that must be maintained in each of the VTAM libraries. I think you will see why this may be a problem in large networks after you digest the remainder of this document.

Following are the SNA RU flows generated by each of these techniques. Note that in all cases a "bind image" flows from the SLU VTAM to the PLU VTAM and the final BIND always flows from the PLU to the SLU's SCIP exit, through both VTAMs. OPNDST ACQ does not permit the PLU to see and modify or use values from the bind image which originates from the logmode table libraries (VTAMLIB) at the SLU's node. This is OK for most BIND parameters that can be predefined at the PLU. It is not true for the pacing values. This will be described following the diagrams. (ILU stands for Initiating LU in the diagrams).

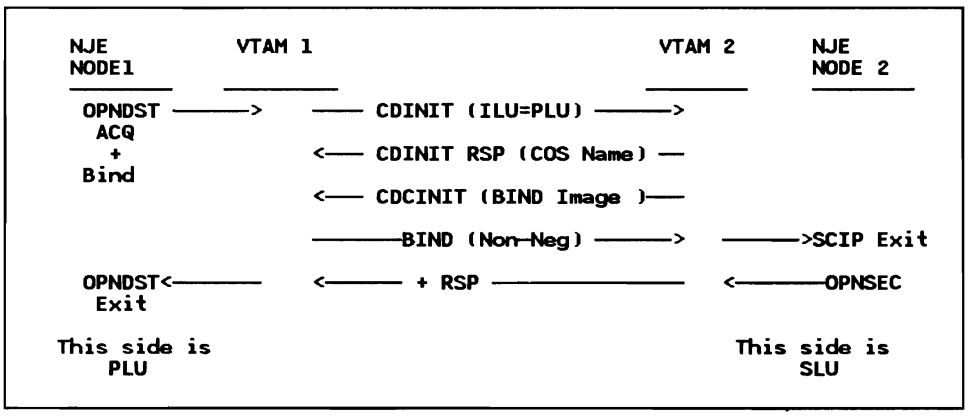

Figure B-10. SNA Session Initialization (OPNDST ACQ)

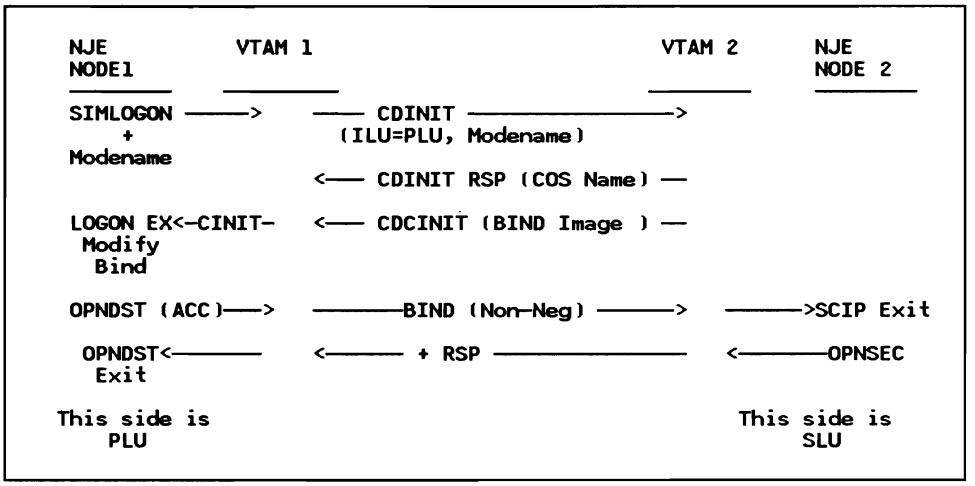

Figure B-11. SNA Session Initialization (SIMLOGON)

The first RU to flow between two systems as a part of session establishment is the CDINIT RU. It specifies whether the origin node wishes to be the PLU or the SLU. For NJE protocols it will always specify the origin wishes to be PLU (ILU = PLU). With this form it will carry a logon mode name if one was provided by the origin NJE application. The CDINIT RSP RU is an extended response and will carry the COS name found in the selected (specific or default) logon mode image at the future SLU. The COS entry used for the route and priority selection for the new session will always be found at the PLU.

The CDCINIT RU always flows from SLU to PLU and will carry the BIND image from the selected or defaulted logon mode image at the SLU. This image can be seen by the PLU application when its LOGON exit is entered by issuing INQUIRE SESSPARMS.

Note that if the PLU issues INQUIRE SESSPARMS before the CDINIT and CDCINIT flow VTAM will present a logmode image from the libraries at the PLU. This is not the image that will later be used when OPDST ACQ is issued. If the NIB contains a logmode name when this INQUIRE is issued, that image will be selected at the PLU. If no logmode name is in the NIB a default image will be selected at the PLU.

Pacing in the Bind Image

VTAM pacing involves four counts

PS - PLU send
SR - SLU receive
SS - SLU send
PR - PLU receive

All these fields are in the final bind image but the final setting that flows is a result of complex algorithms that look at:

1. The values for three of these fields in the selected logmode image at the SLU's VTAM libraries. These values were established by system programmers using batch assembler runs with VTAM macros MODETAB,

MODEENT and MODEEND. The three pacing values that can be defined are PS (PSNDPAC), SR (SRCVPAC) and SS (SSNDPAC). PR is not definable because VTAM does not support two stage pacing for the SLU to PLU flow. Two stage pacing is only supported for PLU to SLU flow and only if the SLU is in a PU_1 or 2 node. One stage paging is always used for NJE, both directions.

2. The VPACING value in the VTAM APPL statement for the SLU

3. The VPACING and AUTH = NVPACE parameters on the VTAM APPL statement for the PLU

4. The bind image prepared by the PLU application and pointed to by OPNDST

5. Lastly, the SLU VTAM uses its configuration knowledge about the type of PU that the SLU is in. For NJE the SLU VTAM will always set bit 0 of bytes 8 and 12 to one stage pacing both directions in the CDINIT bind image. This will force PS = SR and SS = PR when all the other merging is done. If the PLU tries to set these bits as they are currently doing, VTAM ignores them.

Pacing Selection Algorithms

For the following discussion a pacing count of 0 means "no pacing" by VTAM.

PS = SR = ?

1. Use zero if PLU APPL AUTH = NVPACE

2. Else use SRCVPAC value if it is not zero

3. Else use SLU VPACING value. Note, if not coded on APPL statement, default is zero and that becomes PS = SR = 0

Note, the PLU application cannot effect these two values, even if it tries.

SS = PR = ?

1. Use zero if SSNDPAC value is zero

2. Else use PLU VPACING value. Note same default of zero as for SLU VPACING

3. PLU built bind image may REDUCE value but not to zero.

   Note the only pacing value that NJE code can effect is the pacing from SLU to PLU.

BIND Image

Offsets 8, 9, 12 and 13 in the BIND image are properly defined as follows:

BYTE	Bits	Value	Definition
8	0-1		Set by the SLU VTAM. For NJE always set to one stage pacing for SLU to PLU flow which forces SS=PR
	2-7	B'bbbbbb'	Secondary Send pacing count Set by VTAM equal to Primary Receive pacing count.
9	0-1		Reserved
	2-7	B'bbbbbb'	Secondary Receive pacing count Set by VTAM from merge of AUTH=NVPACE on PLU APPL statement and SRCVPAC in logmode image at SLU and VPACE on SLU APPL statement. Not affected by PLU BIND image
12	0-1		Set by the SLU VTAM. For NJE always set to one stage pacing for PLU to SLU flow which forces PS=SR
	2-7	B'bbbbbb'	Primary Send pacing count Set by VTAM equal to Secondary Receive pacing count.
13	0-1		Reserved
	2-7	B'bbbbbb'	Primary Receive pacing count Set by VTAM from merge of SSNDPAC in logmode image at SLU and VPACE on PLU APPL statement. PLU can only reduce resulting value but not to zero.

Note that VTAM simply ignores whatever the PLU sets in the BIND image except for the Primary Receive pacing count.

Implications

NJE sessions should always be paced otherwise severe storage problems may occur at the receiving nodes, which can be both ends since NJE is full duplex. The above algorithms can result in a pacing count of 0 in one direction or the other by improper APPL statements or log mode entry selection. The NJE applications can not override a zero count by bind image modification.

Only the SLU can see the final results of the selections. A pacing count of zero in either direction can cause severe performance problems.

Adding User Sections to NJE Headers (JES2)

This is an update to WSC FLASH 8344 for MVS/SP - JES2 Versions 1.3.6 and 2.1.5. (Comments have been added in the source code of recent versions of JES2 (2.2.0) to help show where to place these modifications.) It provides an explanation for users to create user sections in the following NJE records:

- Network Job Header ('NJH')
- Network Job Trailer ('NJT')
- Network Data Set Header ('NDH')

The job headers and trailers are kept with each job and any SYSOUT data sets throughout the life of the job or data set and transmitted form node to node. See the figure below showing the flow of these records.

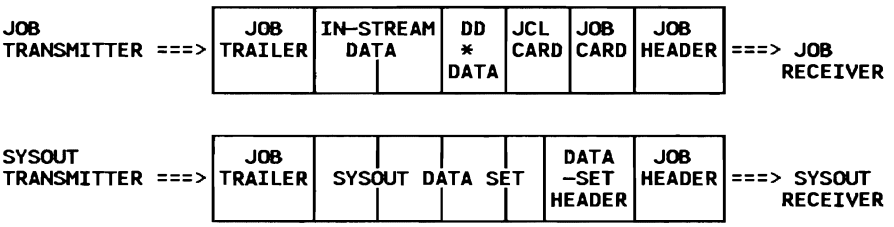

Figure 1. Job and SYSOUT Flow

The design of these records provides for user sections to be added. The changes listed here should help the user create the desired user sections; the installation must also add logic to JES2 to store and/or retrieve the required data in the new sections.

In order to understand the changes required to implement user sections, a short explanation of the network headers is necessary along with a description of JES2 processing in the RNJEHDTR routine. (The routine logic has not changed since the first release of JES2/NJE, but is added to this update to better explain the changes required.)

Network Headers - an Overview

A header is composed of multiple 'sections': a general section, which is common across all networking products, and optional product specific sections. For example, job headers which originate on a JES2 node also contain a JES2 section. Each section is preceded by a length field. To ensure compatibility across various versions of the headers, any new fields are always added to the end of a section.

If a new field is added, the section length is increased by the length of the new field. Using this length, JES2 (or any NJE product) can recognize a down-level section by comparing the length of the section which is received to the length which is required by this system. If the received section is shorter, the section is expanded (padded with binary zeros) to the required length. This section expansion allows further JES2 processing to be transparent to down-level headers. See the figure below showing the basic structure of these records.

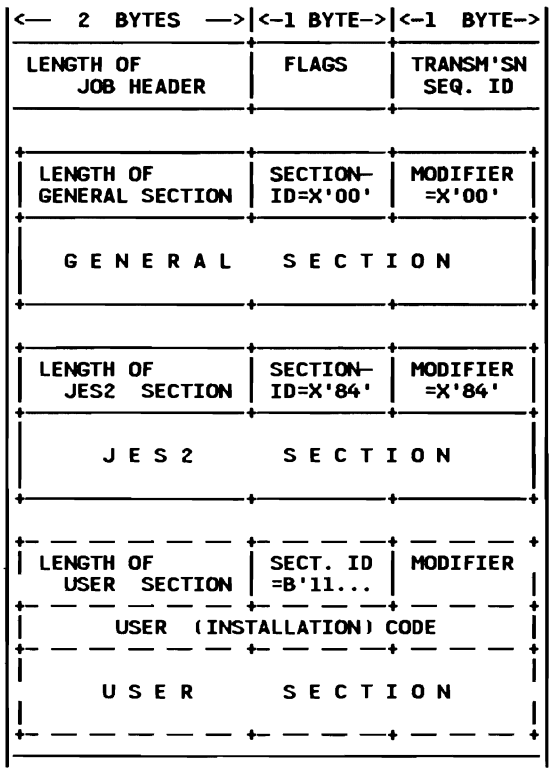

Figure 2. General Format of the Network Headers

Note that an unmodified JES2 system will pass a job through which contains any number of user-defined sections in the Job Header, Job Trailer, or SYSOUT Header. Any received user-defined sections will be re-transmitted without change; however the changes listed in this document must be made if a user-defined section is to be **CREATED** on a JES2 system.

Note also the following restrictions on lengths of headers and trailers:

- The JES2 Job Control Table (JCT), the Job Header, and the Job Trailer are stored (contiguously) in the same spool buffer; therefore, the maximum lengths of the Job Header and Job Trailer (including all user sections) are restricted to the amount of space left in the spool buffer after the JCT is constructed. On systems with 3992-byte buffers, this may not be a practical problem.

- Data Set Headers (including all user sections) may not span a spool buffer (usually set to 3992 bytes). Additional buffers may be used to spool multiple headers, if necessary.

As always, there is no guarantee that the modifications will work on all JES2 systems; users should evaluate this change for applicability in their environment. Also, no work has been done to determine what effect these changes will have on other NJE systems such as RSCS, JES3, and VSE/Power Networking.

RNJEHDTR Routine in HASPRDR

The RNJEHDTR routine in HASPRDR is used by both job receivers and input devices to process network job headers and job trailers. All processing in this routine is based on two explicitly-coded tables, RNJHTABL and RNJTTABL, which are explained in the source of HASPRDR.

The job receiver uses the RNJEHDTR routine to process job headers and job trailers which are received from a network link or loaded from an offload data set. Each header section is moved from the transmission buffer into the JCT buffer. Using the control tables, each header section is expanded to the length required by this system. The control tables are also used to set defaults for any sections which are not found in the received header or trailer.

The input processor uses the RNJEHDTR routine and the control tables to build a default job header and trailer for each job which enters through a local, RJE or internal reader.

Job Receiver Processing: The network job receiver invokes this routine when either a job header or job trailer has been received across a network link. This routine is also used by spool offload job receivers when loading from an offload data set. For the job header, this routine is called from the job card scan routine in HASPRDR. For the job trailer, this routine is invoked from processor termination.

The header or trailer is received in 256-byte segments through the $EXTP GET interface. The input to RNJEHDTR is the first segment of the header or trailer. If necessary, this routine internally issues $EXTP GET requests for additional header segments.

The RNJEHDTR logic for job receivers is as follows:

- Call the RNJHINIT subroutine for the first header segment.
- For each header section:
  - Loop through the appropriate control table (RNJHTABL or RNJTTABL), looking for an entry which matches this section's identifier and modifier. If a matching entry is found, use the corresponding section length (+ 0) as the minimum length for this section. If there is no match, use the received section length as the minimum length.
  - If this is not the first table entry (the general section), 'OR' the section flag byte (+ 4) into a work area (RNJHSECS).
  - Call the RNJHMOVS subroutine to move the header section to the JCT buffer.
- When all header sections have been moved into the JCT buffer, the work area indicates which sections were moved. Compare the work area to the first table entry to determine which sections remain to be built. Loop through the control table again to build defaults in the JCT buffer for the remaining header sections.

The following two subroutines are used by the RNJEHDTR routine:

- RNJHINIT - This subroutine checks to make sure that this segment of the header fits into the remaining space in the JCT buffer. If the header does not fit, the HASP121 'ERROR READING JOB HEADER OR TRAILER' message is issued. This routine also checks the transmission sequence indicator for this header segment (NJHSEQ or NJTSEQ in $NHD).

- RNJHMOVS - This subroutine moves the header section to the JCT buffer. If necessary, the section is automatically expanded (with binary zeros) to the minimum length. This subroutine also handles segmented headers, using the $EXTP GET interface to obtain another header segment.

Input Processing: The input processor uses RNJEHDTR to build the job header and job trailer for jobs which enter the system through local, RJE or internal readers. This routine is called from the job card scan routine for job headers and from processor termination for job trailers.

The RNJEHDTR logic for the input processor is as follows:

- Skip building the general section. The general sections for both the job header and job trailer are built in the job card scan routine before RNJEHDTR is called.

- Using the appropriate control table (RNJHTABL or RNJTTABL), loop through the table entries. Build default header sections in the JCT buffer, using the section length, type and modifier from the table entry. Note that a separate section is created for each entry in the control table.

Adding User Sections to the Job Header

Adding user section(s) to the Job Header requires source changes to the $NHD macro and the HASPRDR module.

Changes to $NHD (Network Job Header DSECT)

This macro contains the DSECTs for the following three network control blocks: Job Header, Job Trailer and Data Set Header. The appropriate headers must be redefined and all JES2 source modules which reference the NJH DSECT must be re-assembled.

1. Change the NJHLLEN EQUate to include NJHULLEN in the total length.

2. (OPTIONAL) The user section identifier field NJHUTYPE is currently set to NTYPUSER, but should be changed if more than one type of user section is to be defined or exist in the Job Header. The first two bits must be B'11'; the other six bits may be set to any value and are used to uniquely define the type of user section. This value is also used by the Job Trailer and Data Set Header user sections (see below).

3. (OPTIONAL) The user section modifier field NJHU$MOD is used to further distinguish between different modification levels of the same type of

user section. The installation needs to change this value only if more than one user section of the same type (NJHUTYPE) is desired.

4. (OPTIONAL) The NJHUCODE field may be used to uniquely define the origin of the user section in a network with multiple enterprises. This word may be set to any value desired by the installation. It is suggested that the SHARE/GUIDE installation code be used as a identifier unique to each installation. (Changing this DSECT is not really necessary; the field must be initialized to this value by code in HASPRDR to be effective.)

5. Insert additional fields required in the user section between the labels 'NJHUCODE' and 'NJHUEND'. Space will be reserved in the user's section for these defined fields and will be set to binary zeros on the input systems.

Changes to HASPRDR

First, a table must be modified to allow the changes to the Job Header DSECT (see above) to be built for jobs entering this system. Next, after the user section is built, the appropriate fields in the user section must be filled in. (Don't forget to fill in the NJHUCODE field - see above.)

The spool offload section must be the last section, so the user section must be inserted before it.

1. To create a user section, the section flag byte at RNJHTABL+4 must be changed to B'11110000'. This turns on the forth bit in the section flag byte to match the 'OR'-sum of the entries which follow it.

2. The user section entry must be added between entries RHDRTAB2 and RHDRTABS

```
RHDRTABU DC AL2(NJHUEND-NJHU),AL1(NTYPUSER,NJHU$MOD)
         DC B'00100000',AL1(0)     USER SECTION
```

3. The Section Flag Byte of the Spool Offload Section (RHDRTABS+4) must be changed to indicate that it is the forth section: B'00010000'.

Adding User Sections to the Job Trailer

Adding user section(s) to the Job Trailer requires source changes to the $NHD macro and the HASPRDR module, which are very similar to the changes for the Job Header.

Changes to SNHD (Network Job Trailer DSECT)

This macro contains the DSECTs for the Job Header, Job Trailer and Data Set Header. The job trailer must be redefined and all JES2 source modules which reference the NJT DSECT must be re-assembled.

1. Change the NJTLLEN EQUate to include the length of the user section NJTULLEN.

2. (OPTIONAL) The user section identifier field NJTUTYPE is currently set to NTYPUSER, but should be changed if more than one type of user section is to be defined or exist in the Job Trailer.

3. (OPTIONAL) The user section modifier field NJTU$MOD is used to further distinguish between different modification levels of the same type of user section. The installation needs to change this value only if more than one user section of the same type (NJTUTYPE) is desired.

4. (OPTIONAL) The NJTUCODE field may be used to uniquely define the origin of the user section in a network with multiple installations. (Changing this DSECT is not really necessary; the field must be initialized to this value in HASPRDR to be effective.)

5. Insert additional fields required in the user section between labels 'NJTUCODE' and 'NJTUEND'. Space will be reserved in the user's section for these defined fields and will be set to binary zeros on the input systems.

Changes to HASPRDR

Again, the 'Contents Control Table' must be modified to allow the changes to the Job Trailer DSECT to be built for jobs entering this system. After the section is built, the various fields must be filled in with the appropriate information. (Don't forget to fill in the NJTUCODE field.)

The spool offload section must be the last section, so the user section must be inserted before it.

1. To create a user section, the section flag byte at RNJTTABL+4 must be changed to B'11100000'. This turns on the third bit in the section flag byte to match the 'OR'-sum of the entries which follow it.

2. The user section entry must be added between labels RNJTTAB1 and RNJTTAB2:

```
RNJTTABU DC AL2(NJTUEND-NJTU),AL1(NTYPUSER,NJTU$MOD)
         DC B'01000000',AL1(0)      USER SECTION
```

3. The Section Flag Byte of the Spool Offload Section (RNJTTAB2+4) must be changed to indicate that it is the third section: B'00100000'.

4. The length of the user section (NJTULEN) must be set as the other sections are near label RNTRL.

Adding User Sections to the Data Set Header

Adding user section(s) to the Data Set Header requires different source code modifications than those required for adding user sections to Job Headers and Trailers. Changes are to the $NHD macro and the HASPNET module.

Changes to $NHD (Network Data Set Header DSECT)

This macro contains the DSECTs for the Job Header, Job Trailer and Data Set Header. The data set header must be redefined and all JES2 source modules which reference the NDH DSECT must be re-assembled.

Unlike the Job Header and Trailer, each section of the Data Set Header is built dynamically and the length of the entire block is computed as each section is added.

1. Move the NDHLLEN EQUate beyond the user section so that it follows the NDHUEND label. This equate is used to define the length of the entire job trailer and fill in the first two bytes of the trailer.

2. (OPTIONAL) The user section identifier field NDHUTYPE is currently set to NTYPUSER, but should be changed if more than one type of user section is to be defined or exist in the Data Set Header.

3. (OPTIONAL) The user section modifier field NDHU$MOD is used to further distinguish between different modification levels of the same type of user section. The installation needs to change this value only if more than one user section of the same type (NDHUTYPE) is desired.

4. (OPTIONAL) The NDHUCODE field may be used to uniquely define the origin of the user section in a network with multiple installations. (Changing this DSECT is not really necessary; the field must be initialized to this value in HASPNET to be effective.)

5. Insert additional fields required in the user section between labels 'NDHUCODE' and 'NDHUEND'. Space will be reserved in the user's section for these defined fields and will be set to binary zeros on the input systems.

Changes to HASPNET (Network SYSOUT Transmitter)

The various sections of the data set header are built with straight-forward code in the SYSOUT Transmitter as opposed to the technique used in HASPRDR with the 'Contents Control Table'.

At label NSTDSHP, before the header is transmitted, code must be added (after the label, but before the Load instruction) to build the user section, update the total length of the data set header and fill in the fields. The technique used in creating the 3800 section at label NSTBLDA can be copied. Specifically, the following steps should be taken:

1. Clear User Section to zeros or default values.
2. Set length of the User Section (NDHULEN).
3. Update total Data Set Header length (NDHLEN).
4. Indicate User Section/Modifier (NDHUTYPE/NDHUMOD).
5. Move SHARE/GUIDE Installation Code (NDHUCODE).
6. Store information in other user fields as required.
7. Update the length of the Data Set Header (NDHLEN).

Using OS Utilities to Send Bulk Data

Much like the BDT IUP, utilities such as IEHMOVE may be used to unload MVS data sets, but is a bit more cumbersome than BDT. Other MVS utilities may be used to transmit VSAM (IDCAMS) and ISAM (IEBISAM) data sets by themselves, or with the BDT IUP. The basic technique is to convert the data set into 80-character logical records and send them as a SYSIN data set in a job which can rebuild the data set at the destination node. This technique can be a bit cumbersome in some cases, but can be done.

1. Sequential, BDAM, or Partitioned Data Sets (any logical record length)

   a. Use IEHMOVE to unload (this must be to tape)

   b. Use IEBGENER to copy back to disk

   c. Use IEBGENER to concatenate the following JCL to the unloaded copy on disk and write it to an internal reader.

      1) JOB card,
      2) /*XEQ card
      3) An IEBGENER step to copy the following data to tape.
      4) The unloaded copy of the data set on disk.
      5) An IEHMOVE step to load it back to disk (need volume serial numbers).

      See the example below.

2. ISAM Data Sets

   a. Use IEBISAM to unload it to a temporary disk data set

   b. Use IEBGENER to concatenate the following JCL to the unloaded data set and write it to the internal reader.

      1) JOB card,
      2) /*XEQ card
      3) An IEBISAM step to rebuild the ISAM data set
      4) The unloaded data set.

3. VSAM Data Sets

   a. Use Access Method Services (REPRO) to create a sequential copy of the data set.

   b. Use IEHMOVE to unload the sequential copy (this must be to tape)

   c. Use IEBGENER to copy back to disk

   d. Use IEBGENER to concatenate the following JCL to the unloaded copy on disk and write it to an internal reader.

      1) JOB card

2) /*XEQ card
3) IEBGENER step to copy to tape.
4) The unloaded copy of the data set on disk.
5) An IEHMOVE step to load it back to disk (need to specify volume serial number).
6) An Access Method Services step to create a new VSAM data set and load it (using REPRO) from the sequential file on disk.

```
//SENDPDS JOB  < job parameters >
//UNLOAD  EXEC PGM=IEHMOVE
//SYSPRINT DD  SYSOUT=*
//SYSUT1   DD  UNIT=3330,VOL=SER=WORK98,DISP=OLD
//DD1      DD  UNIT=3330,VOL=SER=MVSRES,DISP=OLD
//DD2      DD  UNIT=3330,VOL=SER=TSOSJL,DISP=OLD
//TEMPOUT  DD  UNIT=3400-6,VOL=(PRIVATE,RETAIN,SER=T01557),
//             LABEL=(1,NL),DISP=(,PASS),
//             DCB=(RECFM=FB,LRECL=80,BLKSIZE=800,DSORG=PS)
//SYSIN    DD  *
  COPY     PDS=SYS1.LINKLIB,TO=3400-6=T01557,TODD=TEMPOUT,        X
             RENAME=LINKLIB2.UNLDPDS
/*
//TODISK  EXEC PGM=IEBGENER
//SYSPRINT DD  SYSOUT=*
//SYSUT1   DD  DSN=LINKLIB2.UNLDPDS,DISP=OLD,UNIT=3400-6,
//             VOL=(PRIVATE,SER=T01557),LABEL=(1,NL),
//             DCB=(RECFM=FB,LRECL=80,BLKSIZE=800,DSORG=PS)
//SYSUT2   DD  DSN=&UNLDPDS,DISP=(,PASS),UNIT=3330,
//             DCB=(RECFM=FB,LRECL=80,BLKSIZE=800),SPACE=(CYL,(1))
//SYSIN    DD  DUMMY
/*
//SEND2   EXEC PGM=IEBGENER
//SYSPRINT DD  SYSOUT=*
//SYSUT1   DD  DSN=SYS1.PROCLIB2(SENDJCL1),DISP=SHR
//         DD  DSN=&UNLDPDS,DISP=(OLD,PASS),UNIT=3330
//         DD  DSN=SYS1.PROCLIB2(SENDJCL2),DISP=SHR
//SYSUT2   DD  SYSOUT=(A,INTRDR)
//SYSIN    DD  DUMMY
```

Figure B-12. Example of Transmitting a PDS. Transmitting a copy of SYS1.LINKLIB (PDS) to NODE #2

```
SENDJCL1:

//RECEIVE JOB  < job parameters >
/*XEQ NODE2
//SEND    EXEC PGM=IEBGENER
//SYSPRINT DD  SYSOUT=*
//SYSIN    DD  DUMMY
//SYSUT2   DD  DSN=UNLOADED.LINKLIB2,DISP=(NEW,PASS),UNIT=3400-6,
//             VOL=(PRIVATE,RETAIN,SER=T01234),LABEL=(1,NL),
//             DCB=(RECFM=FB,LRECL=80,BLKSIZE=800)
//SYSUT1   DD  *


SENDJCL2:

//REBUILD  EXEC  PGM=IEHMOVE
//SYSPRINT DD  SYSOUT=*
//SYSUT1   DD  UNIT=3330,VOL=SER=WORK99,DISP=OLD
//DD1      DD  UNIT=3330,VOL=SER=MVSRES,DISP=OLD
//DD2      DD  UNIT=3330,VOL=SER=WORK99,DISP=OLD
//TAPEHOLD DD  UNIT=3400-6,DISP=OLD,DSN=UNLOADED.LINKLIB2,
//             VOL=(PRIVATE,SER=T01234),LABEL=(1,NL),
//             DCB=(RECFM=FB,LRECL=80,BLKSIZE=800)
//SYSIN    DD  *
  MOVE  DSNAME=UNLOADED.LINKLIB2,TO=3330=WORK99,FROM=3400-6=T01234,X
             FROMDD=TAPEHOLD,RENAME=SENT.LINKLIB2
/*
```

Figure B-13. Example of Receiving a PDS. Receiving a copy of SYS1.LINKLIB at Node2.

Appendix C. Bibliography

The following list of publications is a subset of the various product documentation libraries including some IBM System Journal reprints and Systems Center Technical Bulletins. For a complete list of product documentation, see the General Information Manuals listed under the appropriate product heading, or *IBM System/370 Bibliography*, GC20-0001.

General NJE

- *Job Networking (IBM Systems Journal V17 N3, 1978)*, G321-5071
- *Job Networking Facilities*, GG22-9042
- *Network Job Entry Formats and Protocols*, GG22-9373
- *NJE Concepts and Protocols Overview*, GG66-0224

Systems Network Architecture (SNA)

- *Concepts and Products*, GC30-3072
- *Technical Overview*, GC30-3073
- *Sessions Between Logical Units*, GC20-1868
- *Reference Summary*, GA27-3136
- *Format and Protocol Reference Manual: Architectural Logic* , SC30-3112
- *IBM Synchronous Data Link Control General Information* , GA27-3093

ACF/VTAM Version 2

- *General Information*, GC27-0608
- *Planning and Installation Reference*, SC27-0610
- *Programming*, SC27-0611
- *Operation*, SC27-0612
- *Messages and Codes*, SC27-0614
- *Diagnosis Guide*, SC27-0615
- *Diagnosis Reference*, LY38-3053 (OS/VS), LY38-3058 (VSE)
- *Data Areas*, LY38-3054 (OS/VS), LY38-3059 (VSE)

ACF/VTAM Version 3

- *General Information*, GC30-3246
- *Installation and Resource Definition*, SC23-0111
- *Operation*, SC23-0113
- *Programming*, SC23-0115
- *Messages and Codes*, SC30-3275

Binary Synchronous Communications (BSC)

- *General Information*, GA27-3004

Channel-to-Channel Adapter (CTC)

- *S/370 Special Feature Description: CTCA*, GA22-6983

JES2

- *Network Job Entry (IBM Systems Journal V17 N3, 1978)*, G321-5072
- *Running JES2/NJE on an ACF/VTAM Network*, G320-5855
- *How JES2 Uses SNA for RJE and NJE*, GG22-9378
- *JES2 Performance Considerations*, GG66-0205
- *JES2 Internal Reader Processing*, GG22-9207

MVS/SP JES2 - Version 1 (5740-XYS)

- *General Information*, GC28-1025
- *JES2 Initialization and Tuning*, SC23-0046
- *JES2 Commands*, SC23-0048
- *JES2 Messages*, GC28-1354
- *JES2 User Modifications and Macros*, LC23-0067
- *JES2 Logic*, LY24-6006
- *JES2 Command Language Reference Summary*, SX23-0008
- *MVS JCL User's Guide*, GC28-1349
- *MVS JCL Reference*, GC28-1350
- *System Management Facilities*, GC28-1030
- *System Messages Volume 1*, GC28-1374
- *System Messages Volume 2*, GC28-1375

MVS/SP JES2 - Version 2 (5740-XC6)

- *General Information*, GC28-1118
- *JES2 Initialization and Tuning*, SC23-0065
- *JES2 Commands*, SC23-0064
- *JES2 Messages*, GC28-1353
- *JES2 User Modifications and Macros*, LC23-0069
- *JES2 Logic*, LY24-6008
- *JES2 Command Syntax*, SX23-0010
- *MVS JCL User's Guide*, GC28-1351
- *MVS JCL Reference*, GC28-1352
- *System Management Facilities*, GC28-1153
- *System Messages Volume 1*, GC28-1376
- *System Messages Volume 2*, GC28-1377

JES3

- *JES3 SNA/NJE Installation Considerations*, GG22-0253

MVS/SP JES3 - Version 1 (5740-XYN)

- *General Information*, GC28-1025
- *JES3 Initialization and Tuning*, SC23-0041
- *JES3 Operator's Library*, SC23-0045
- *JES3 Operator's Reference Summary*, SX23-0007
- *JES3 User Modifications and Macros*, LC28-1371
- *JES3 Logic*, LY24-6005
- *MVS JCL User's Guide*, GC28-1349
- *MVS JCL Reference*, GC28-1350
- *JES3 Messages*, GC23-0044
- *System Messages Volume 1*, GC28-1374
- *System Messages Volume 2*, GC28-1375
- *System Management Facilities*, GC28-1030

MVS/SP JES3 - Version 2 (5665-291)

- *General Information*, GC28-1118
- *JES3 Initialization and Tuning*, SC23-0059
- *JES3 Commands*, SC23-0063
- *JES3 Command Syntax (Reference Card)*, SX23-0012
- *JES3 User Modifications and Macros*, LC28-1372
- *JES3 Logic*, LY24-6007
- *MVS JCL User's Guide*, GC28-1351
- *MVS JCL Reference*, GC28-1352
- *JES3 Messages*, GC23-0062
- *System Messages Volume 1*, GC28-1376
- *System Messages Volume 2*, GC28-1377
- *System Management Facilities*, GC28-1153

TSO/E Release 3 (5665-285, 5665-293)

- *General Information*, GC28-1061
- *Command Language Reference*, SC28-1307
- *User's Guide*, SC28-1333
- *Reference Summary*, SX23-0015
- *Installation and Planning Guide (Vol. 1)*, SC23-1379
- *User Exits and Modifications (Vol. 2)*, SC23-1380
- *Command and Macro Reference (Vol. 3)*, SC23-1381

MVS/BDT Version 2 (5665-264)

- *General Information*, GC23-0223
- *Installation*, SC23-0224
- *Commands*, SC23-0226
- *Messages and Codes*, GC23-0227
- *Transaction and Command Reference Summary* , SC23-0228
- *File-to-File Transaction Guide*, SC23-0025
- *Diagnosis Reference*, LY27-8048

- *Logic*, LY27-8042

BDT Program Offering (5796-PKK)

- *Program Description/Operation Manual*, SH20-2088

VM/370

- *Evolution of Virtual Machine Subsystem (IBM Systems Journal, V18, N1, 1979)*, G321-5089

VM/SP

- *General Information*, GC20-1838
- *Introduction*, GC19-6200
- *Planning Guide and Reference*, SC19-6201
- *Operator's Guide*, SC19-6202
- *CMS User's Guide*, SC19-6210
- *CMS Command and Macro Reference*, SC19-6209
- *CP Command Reference for General Users*, SC19-6211
- *Group Control System Guide*, SC24-5249
- *Messages and Codes*, SC19-6204
- *Distributed Data Processing Guide*, SC24-5241
- *Installation Guide*, SC24-5237
- *Quick Guide for Users*, SX20-4400
- *Command Reference Summary (General User)*, SX20-4401

RSCS Networking Version 2 (5664-188)

- *General Information*, GH24-5055
- *Planning and Information*, SH24-5057
- *Operation and Use*, SH24-5058
- *Exit Customization*, LY24-5240
- *Diagnosis Reference*, LY24-5228
- *Reference Summary*, SX24-5135

VSE

VSE/POWER Version 2 (5666-273)

- *General Information*, GH12-5131
- *Networking User's Guide*, SC33-6140
- *Installation and Operations Guide*, SH12-5329
- *Reference Summary*, SH12-5435
- *Messages*, SH12-5520
- *Program Logic Manual Part 1*, LY12-5027
- *Networking Design Guide*, GG24-1570
- *VSE/SP Networking*, SC33-6180

FTP Version 1

- *Program Reference and Operations Manual*, SH12-5342

FTP Version 2

- *General Information*, GH12-5141
- *Prompter Users Guide*, SH12-5352
- *Program Reference and Operations Manual and Diagnosis Guide* , SH12-5349
- *Application Programming Guide*, SH12-5373
- *Messages*, SH12-5534
- *Installation Guide*, SH12-5354
- *Installation Guide for VM*, SH12-5399
- *Diagnosis Reference*, SY12-5350

Appendix D. Glossary

This glossary defines NJE terms and other data processing terms used in this publication. For definitions of terms not included in this glossary, see *NJE Formats and Protocols*, GG22-9373 and *IBM Vocabulary for Data Processing, Telecommunications, and Office Systems*, GC20-1699.

A

ACF. Advanced Communication Facility - A group of SNA program products for users of MVS, VM and VSE that can provide improved data communication capability.

ACF Networking. The use of Advanced Communication Facility to exchange data between two or more processors using MSNF.

ACF/VTAM. Advanced Communications Facility/Virtual Terminal Access Method

ACK (or ACK0,ACK1). In BSC, an affirmative acknowledgement, indicating that the previous block was accepted without error, and the receiver is ready to accept the next block of transmission.

adjacent. In NJE, two nodes are said to be "adjacent" if they are connected directly by a communication link or session.

AFP. Advanced Function Printing

AFPDS. Advanced Function Printing Data Stream. An architected set of control codes used to control page printers running in all-points-addressable (i.e., page) mode.

ASA. American Standards Association

ASP. Attached Support Processor or Asymmetric Multiprocessing System - A system that provides supplementary job management, data management, and task management functions, such as: control of job flow, ordering of tasks and spooling. Predecessor of JES3.

ASP Networking. The programming RPQ providing NJE support for ASP 3.2.1 systems (SVS or MVT).

B

BDT. Bulk Data Transfer - A Program Product for MVS (5665-302 and 5665-264). Also a Program Offering for MVS (5798-PKK).

BIND. In SNA, a request to activate a session between two logical units.

block control byte (BCB). A byte used to maintain the integrity of data during a multi-leaving transmission.

BSC. Binary Synchronous Communication, or Bisynchronous Communication - Communication using binary synchronous line discipline in which transmission of binary-coded data between stations is synchronized by timing signal generated at the sending and receiving stations.

bulk data. Collections of data in a file (VM) or data set (MVS or VSE). The term is used to differentiate from a transaction which is a smaller amount of data or a message. Also called "batch data".

C

CES. See "connection event sequence".

channel to channel adapter (CTC or CTCA). A feature on S/370 channels that allows two processors to communicate directly to one another. It is described in *IBM S/370 Special Feature Description: Channel-to-Channel Adapter*, GA22-6983. Also see the IBM 3088.

CMS. Conversational Monitor System - The interactive time-sharing facility available under VM/370.

cold-start. The type of initialization of a system or subsystem that purges the queues upon starting.

compaction. A method of reducing the length of records for transmission by representing certain 8 bit characters with only 4 bits. Done by representing adjacent "master" characters by a single byte. See *JES2 Initialization and Tuning* or *NJE Formats and Protocols*.

compression. A method of reducing the length of records for transmission by removing blanks and duplicate characters. See *NJE Formats and Protocols*.

connection. (in NJE) a physical link between two processors. It may consist of:

- one or more BSC lines
- a channel-to-channel adapter
- an SNA session
- (JES2 only) a shared spool

connection event sequence (CES). A number in each path manager record, based on the current TOD clock value (in GMT), to prevent the use of redundant path manager records by the Network Path Manager.

CPDS. Composed Page Data Stream. An old name for AFPDS.

CTC. See "channel to channel adapter".

D

data record. In NJE, this refers to all records with an RCB in the range 98-F8 and the range 99-F9 which do not have an SRCB with the two high order bits set to one.

data set header (NDH or DSH). An NJE control record that generally precedes a unit of SYSOUT data. It may also appear in the middle of SYSIN data to indicate a change in the format of the SYSIN data.

DBCS. Double-Byte Character Set. A method of representing information, in which each character to be printed is represented by two bytes. This contrasts with EBCDIC, in which each character to be printed is represented by one byte.

decompaction. The process of restoring a compacted record to its original form.

decompression. The process of restoring a compressed record to its original form.

DES. The National Bureau of Standards Data Encryption Standard - A cryptographic algorithm designed to encipher and decipher data using a 64-bit key specified in the Federal Information Processing Standard Publication 46, January 15, 1977.

DLE. Data Link Escape - a BSC control character used to provide supplementary line control characters.

E

end-node. A node in a NJE network which has only one connection to the network. It cannot act as an intermediate node, but can only receive jobs or sysout destined for itself.

end of file (EOF). This refers to a null record that is transmitted at the end of a job, following the job trailer, to indicate that nothing remains to be transmitted. It is acknowledged by a Stream Complete.

F

fan-out. The ability in NJE to send a SYSOUT data set to multiple destinations without sending multiple copies down the same link.

file. A set of records related as a unit. Also referred to as a data set.

FMH. See "function management header".

function management header (FMH). In SNA, specialized control format to select a destination and control the way data is sent or presented at the destination.

G

GMT. Greenwich Mean Time - The standard global universal time used as a common time reference around the world.

H

HASP. Houston Automatic Spooling Priority - A system that provides supplementary job management, data management, and task management functions, such as: control of job flow, ordering of tasks and spooling. Predecessor of JES2.

HASP Networking. The programming RPQ providing NJE support for HASP/SVS systems.

host. A processor running OS (e.g., MVS, VS1, SVS) or VM having remote terminals attached.

hybrid network. A NJE network with different systems (e.g., OS, VM, TSS) or subsystems (e.g., JES2, JES3) on different nodes.

J

JCL. See "job control language".

JCT. In JES2, the Job Control Table - a spool-resident control block containing all the job-level information about the job.

JECL. See "job entry control language".

JES. Job Entry Subsystem - A system facility for managing jobs and sysout data sets on auxiliary storage including spooling, job queueing and scheduling. See also JES2 and JES3.

JES2. Job Entry Subsystem/2 - A functional extension of HASP II program for MVS that receives jobs into the system and processes all sysout data produced by the job.

JES3. Job Entry Subsystem/3 - A functional extension of ASP 3 program for MVS that receives jobs into the system, manages device allocation, setup, and processes all sysout data produced by the job.

JES3 global. In a JES3 complex, the processor responsible for managing the complex, i.e. Controlling all input and output, insuring complex-wide data integrity, etc. The global also handles all networking functions.

JES3 local. A processor in a JES3 complex whose primary function is to run MVS jobs. Locals access the global for various services.

job. The basic unit of transmission in a NJE network. It consists of all data beginning with a job header control record and ending with a job trailer control record.

job control language (JCL). In OS/VS, an esoteric command language used to specify batch work.

job entry control language (JECL). Specialized control language, interspersed in JCL, read by the job entry subsystem (JES2, JES3, or VSE/POWER).

job header (NJH). The NJE control record that provides general information relating to the job as a whole.

job networking. Another name for network job entry (NJE).

jobstream. Input to the system containing JCL and input data. May be one or more jobs. Usually in card image format.

job trailer (NJT). The NJE control record the terminates the job and generally provides accounting information.

L

link. A connection, or ability to communicate between two adjacent nodes. See link.

logical unit (LU). In SNA, a port through which an end user or application accesses the network in order to communicate with another end user or application.

logoff. (1) The process by which a user ends a terminal session. (2) In VTAM, a request that the terminal be disconnected from a VTAM application program.

logon. (1) The process by which a user begins a terminal session. (2) In VTAM, a request that the terminal be connected to a VTAM application program.

LU. Logical Unit - see LU.

LRECL. Logical Record Length

LU_0. Logical Unit Type 0. In SNA, a port through which two applications communicate using implementation-defined protocols. NJE uses such protocols for SNA transmissions.

M

Multi-Access Spool (MAS). Two to seven JES2 systems sharing the input, execution, and output queues through the use of shared DASD.

multi-leaving (ML). A pseudo-simultaneous bi-directional fully-synchronized multi-stream transmission between two computers using BSC facilities.

MSNF. Multi-Systems Networking Facility - A feature of ACF/VTAM or ACF/TCAM that supports communication among multiple host computers operating with VSE and MVS.

MVS. Multiple Virtual Storage - an alternate name for OS/VS2.

MVS/SP. Multiple Virtual Storage/System Product

N

NAK. In BSC, a Negative Acknowledgement, indicating that the previous block was received in error, and the receiver is ready to accept a retransmission of the erroneous block.

NCC. See "network connection control".

NCP. Network Control Program - A program, generated by the user from a library of IBM-supplied modules, that controls the operations of a communications controller (3705).

NDH. Network Data Set Header - see Data Set Header

network connection control (NCC). An NJE control record used to establish or break a connection. Also used by the network path manager to send information about other NJE connections.

network. The assembly of equipment through which physical connections are made between remote locations. See also "NJE network" and "ACF Networking."

network job entry (NJE). **(1)** A facility for transmitting jobs (JCL and in-stream data sets), sysout data sets, (job-oriented) operator commands and operator messages, and job accounting information from one computing system to another. **(2)** A facility that provides access to batch computing facilities from other host systems. It enables users to transfer work and data throughout a distributed network of batch computing facilities. ("NJE" is not a part of "Systems Network Architecture

(SNA)", but is an application layer which uses SNA, BSC and CTC transmission facilities.) **(3)** The JES2 program product implementation of the NJE Protocol.

network job interface (NJI). The original HASP, RSCS, ASP, or JES3 Programming RPQ implementation of the NJE Protocol.

network path manager (NPM). A facility to manage the topology of a network through the sending, receiving and processing of network connection and control (NCC) records. It handles sign-ons, sign-offs, alternate path routing and parallel links.

NJE. See "network job entry".

NJH. Network Job Header - see "job header".

NJI. See "network job interface".

NJT. Network Job Trailer - see "job trailer".

NMR. See "nodal message record".

nodal message record (NMR). A record for transmitting commands and messages to other locations.

node. The high-level addressable point in a NJE network. A processing point in a network. It can be either a single system (e.g., VM processor), or a collection of loosely-coupled systems (e.g., JES2 or JES3 complex) sharing a common job queue.

nodeid. Node identifier. The name by which a node is known to users, operators and other nodes in the network. Also called nodename. It may also be a number (JES2 only).

nodename. The one-to-eight character (EBCDIC) name assigned to a node by which a node is known to the rest of the network.

non-switched line. A communication link between two devices or processors that does not have to be established by dialing.

notification. The sending of a message to an interactive user of an event associated with the processing of a job.

NPM. See "network path manager".

P

page mode. A mode of printer operation in which the printer can accept a page of data at a time in all-points-addressable format.

password. A one to eight alphameric character string that a user specifies to meet security requirements when entering the system or accessing protected data sets.

path. A collection of connections through which jobs (and sysout data sets, commands & messages) flow from an originating node to a destination node.

path management record. In NJE, a NCC add or subtract record containing network connectivity information.

POWER. "Priority Output Writers, Execution Processors and Input Readers" - a spooling subsystem for VSE systems

PSF. Print Services Facility - a program product for MVS or VM to control advanced function printers in all-points-addressable mode.

R

receiver cancel. In NJE, this refers to a record with an RCB of X'B0'. This is used after a Permission Granted has been transmitted and the receiver wishes to terminate the job on a stream.

record. In NJE, this is defined as all bytes beginning with an RCB up to but not including the next RCB. This term encompasses Control Records, data records, and nodal message records.

record identifier (RID). The Record Identifier used in SNA transmissions. It is a three byte field made up of the RCB, SRCB, and a byte containing the length of the data record.

remote job entry (RJE). Facility for submitting a job, and receiving output, through an I/O device

that is connected to a computer via communications equipment.

remote terminal. A terminal attached to a host (or subhost) system through a data transmission link.

request/response unit (RU). In SNA, an element of the Basic Link Unit containing data and data stream controls.

RID. See "record identifier".

RJE. See "remote job entry".

RJP. Remote Job Processing. The ASP and JES3 name for RJE.

routing. The assignment of a communication path by which a message (or other transmission) will reach its destination.

RSCS. Remote Spooling Communications Subsystem - A virtual machine subsystem of VM/370 that transfers spool files between VM/370 users, remote stations, and remote and local batch systems via HASP-compatible telecommunications facilities.

RSCS Networking. The formal name of the program product (5664-188 for version 2) providing NJE support for VM/370 systems.

RU. Request/Response Unit

S

SAF. security authorization facility

SCB. See "string control byte".

scheduler work block (SWB). A structured data block containing the data produced by subsystem JCL verification and internal processing.

SCIP. Set Control Interval Processing

SDSF. System Display and Search Facility - a licensed program product (5665-488) that supersedes the SPOOL Display and Search Facility program offering (5798-DWX). It allows end users and operators to display job data from JES2 spool and to control selected JES2 operation in a full screen environment.

SDLC. Synchronous Data Link Control - A protocol defined by SNA used for data transmissions over common-carrier communication facilities.

session. (in SNA) A formally bound pairing between two network addressable units.

SMF. System Management Facility - A standard feature of OS/VS2 that collects a variety of system and job related information.

SNA. (1) (Noun) See "systems network architecture". (2) (Adjective) Adhering to the Systems Network Architecture definitions. "SNA" is used to describe links, I/O devices, telecommunication controllers, etc.

spool. Simultaneous Peripheral Operation On-Line (1) (Noun) An area of auxiliary storage defined to temporarily hold data during its transfer between peripheral equipment and the processor. (2) (Verb) To use auxiliary storage as a buffer storage to reduce processing delays when transferring data between peripheral equipment and the processing storage of a computer.

spoolid. Spool file identifier. A number between 1 and 9900 that is assigned to a spooled file by VM spooling facility.

SRCB. See "sub record control byte".

store-and-forward. The protocol of completely storing a job (or sysout data set) at an intermediate node before forwarding it on to the next node in the path to its destination.

stream. A logical flow of information.

string control byte (SCB). A byte within the data stream that is used in compression algorithms.

sub record control byte (SRCB). Defines individual types of records within an RCB.

subhost. A system that can act like a host to its RJE terminals, but can also act as an RJE terminal to another host system through a workstation program.

SUN. San Jose Unified Network or Subsystem Unified Network - An early implementation of NJE networking between IBM internal sites. Also called the IBM Corporate Job Network (CJN). Now called "VNET".

SWB. See "scheduler work block".

switched line. A communication link in which connection between two devices or processors is established by dialing.

SYSIN. SYSIN refers to a type of job which is intended to be processed (or executed) by the operating system at the receiving node. After processing, SYSOUT is usually produced which is usually returned to the origin node. It is possible for a job to execute and produce SYSIN to be executed at the same or another node.

Also refers to in-stream data within a pre-execution job.

SYSIN data. The in-stream data imbedded with JCL in a pre-execution job.

SYSOUT. SYStem OUTput data which is SPOOLed by the job entry subsystem and eventually de-SPOOLed and written to a card punch, printer or other output device. When received by the networking component at the destination, it is not inserted into the execution job queue. It may be printed or punched immediately on a locally connected output device, or placed into a state from which a user or operator of the system may specify its further processing.

systems network architecture. A data communications protocol for controlling a teleprocessing network through a formal definition of the functional responsibilities of communication system components.

T

TCAM. Telecommunications Access Method - A teleprocessing access method used to transfer data between application programs and local or remote terminals. In the NJE context, only the version of ACF/TCAM which supports the VTAM interface is relevant.

transmission block. A collection of one or more records to be transmitted over the network as a unit. Transmission blocks are that portion of each transmission that is independent of the access method.

transmission buffer. An area in storage for building and receiving transmission blocks.

TSO. Time Sharing Option - An option of MVS, SVS, and MVT that provides conversational time-sharing from remote terminals.

TSO/E. Time Sharing Option/Extensions

TSS. Time Sharing System/370 - A controlled marketing general purpose virtual memory operating system.

U

userid. User identifier. (1) (VM) the name by which a virtual machine and its user are known to others. (2) (MVS) the name by which a time sharing user is known to others.

V

VM. Virtual Machine

VM/370. Virtual Machine/370 A System Control Program

VNET. (slang) Contraction of Vm NETworking, a programming RPQ that supported NJE on VM/370 systems. Predecessor to RSCS Networking. Also the name of the IBM internal NJE network.

VSE. Virtual Storage Extended. The successor to DOS/VS and DOS/VSE.

VSE/POWER. "Virtual System Extended/Priority Output Writers, Execution Processors and Input Readers". A spooling system for VSE.

VTAM. Virtual Telecommunications Access Method. A set of programs that control communi-

cation between terminals and application programs running under VSE, VM/SP3, and MVS.

W

warm-start. The initialization of a system of subsystem that does not clean work out of the queues, but resumes processing of work previously left in the system.

workstation. A remote terminal connected to a host using RJE from which jobs can be submitted to the host for processing, and to which output can be returned.

workstation program. A program residing in a subhost which acts like an RJE terminal.

Index

Special Characters

$AJ 3-25, 3-36
$CJ 3-25, 3-36
$CL 3-35
$CONNECT 2-11, 2-12, 2-28, 3-9
$D 2-29, 3-14, 3-17, 3-20, 3-24
$DF 3-17, 3-20
$DJ 3-20, 3-36
$DM 3-29, 3-36, 4-32
$DMN 3-36
$DN 3-17
$DQ 3-17, 3-36
$DU 3-8, 3-11
$E 3-7, 3-11, 3-35
$ELNE 3-7, 3-35
$HJ 3-25, 3-36
$LJ 3-20
$MAXNODE 2-8
$N 3-8, 3-14, 3-29, 3-30, 3-31, 3-33, 3-36, B-25, B-26, B-27, B-28
$OJ 3-25
$P 3-11, 3-25, 3-35, 3-36, B-3
$PJ 3-25, 3-36
$PJES2 3-7
$PLGN 3-7
$PLNE 3-7, 3-35
$R 3-22, 3-24, 3-36
$S 2-35, 2-36, 3-3, 3-4, 3-5, 3-6, 3-11, 3-13, 3-35, B-3
$SL 2-35, 3-35
$SN 2-33, 2-36, 2-37, 3-3, 3-4, 3-5, 3-6, 3-35, B-2, B-3, B-4
$T 3-11, 3-18, 3-22, 3-25, 3-36
$TJ 3-18, 3-25, 3-36
$TN 3-8, 3-35
$TOJ 3-18, 3-22, 3-25, 3-36
$TR 3-35
/*DEL 4-7
/*EOF 4-7
/*JOBPARM 2-9, 4-8, 4-9, 4-25
/*NETACCT 2-30, 2-48, 4-7, 4-8, 4-16
/*NOTIFY 2-13, 2-17, 4-7, 4-35
/*OUTPUT 4-18, 4-19, 4-21, 4-24
/*PRIORITY 4-7, 4-9
/*PURGE 4-7
/*ROUTE 4-5, 4-6, 4-7, 4-8, 4-9, 4-18, 4-21, 4-41
/*SCAN 4-7
/*SETUP 4-7
/*XEQ 2-39, 4-5, 4-6, 4-8, 4-9, 4-31, 4-33, B-29, B-30
/*XMIT 2-13, 2-39, 4-5, 4-6, 4-7, 4-8, 4-9, 4-10, 4-21
// OUTPUT 4-18, 4-22
//*FORMAT 4-22
//*MAIN 2-9
//*NETACCT 2-49, 4-12
//*ROUTE 4-12

A

ABEND 3-7
ACB 2-11, 2-15, 2-35, 3-13, 3-35, B-2, B-3
Accounting 1-1, 2-5, 2-40, 2-42, 2-47, 2-48, 2-49, 2-50, 2-51, 2-52, 4-9, 4-10, D-4
Accounting Record 2-48, 2-49, 2-50, 2-51
ACF/VTAM 2-3, 2-4, 2-10, 2-15, 2-25, 4-42, A-11, C-1, C-2, D-1, D-4
ACQ 2-34, 2-35, 2-36, A-7, A-12, A-15, A-17, A-19, B-18, B-19
AFP 4-27, 4-28, B-8, B-10, D-1, D-2
AFPDS B-8, D-1, D-2
Algorithm 2-14, 2-40, 2-44, 3-12, 3-19, 3-35, B-19, B-20, B-21, D-2, D-6
ALLOCATE 4-18, 4-22
ALLUSERS 3-34
Alter Node
Alter Path
Alternate Path 1-4, 2-12, 2-41
Alternatives to NJE 1-6, 2-21
AMS 2-15
APAR
  See specific APARs, such as OZ81051
APPL 2-11, 2-27, 2-30, 2-32, 2-33, 2-34, 2-35, 2-37, 2-38, 3-3, 3-5, 3-13, 4-43, A-6, A-7, A-10, A-12, A-15, A-16, A-17, A-18, A-19, B-3, B-4, B-5, B-20, B-21
Application 1-5, 1-6, 2-10, 2-24, 2-27, 2-30, 2-32, 2-33, 2-34, 2-37, 2-45, 2-47, 3-13, A-7, A-9, A-12, A-15, A-17, A-18, B-2, B-3, B-4, B-5, B-18, B-19, B-20, B-21, C-5, D-4, D-7
Applid 2-11, 2-27, 2-32, 2-33, 2-36, 3-3, 3-13, 3-35, A-6, A-7, A-16, A-18, B-3, B-4, B-5
ATCCON 2-32, 2-33, A-7, A-11, A-14, A-16, A-17
ATCSTR 2-32, 2-33, A-7, A-11, A-14, A-16, A-17
Attach 1-1, 2-3, 2-4, 2-19, 2-29, 2-34, 2-42, 3-9, 3-11, 3-13, 4-12, 4-27, B-7, B-9, B-10, D-1, D-3, D-6
AUTH 2-34, A-5, A-7, A-12, A-15, A-16, A-17, A-19, B-20, B-21
Authentication 2-15
Authorization 2-13, 2-14, 2-15, 3-33, 3-34, 4-8, 4-9, 4-18, D-6
AUTOSTART 3-6
Availability 2-3, 2-10, 2-19, 2-20, 2-21, 2-41, B-7
Avoid 2-14, 2-26, 2-42, 2-43, 3-26, B-4

B

Back-bone 2-6
BDT 1-4, 2-29, 2-35, 3-2, 3-4, 3-5, 3-17, 3-27, 3-36, 4-41, 4-42, 4-43, 4-44, 4-45, A-9, A-10, B-18, B-29, C-4, D-1
BDTRECV 4-41, 4-43
BDTXMIT 4-41, 4-43
BIND 2-32, 2-35, 2-36, 2-37, A-7, B-18, B-19, B-21, D-1
BLDG 2-49
BLKSIZE B-30
Broadcast 3-14
Buffer 2-19, 2-29, 2-37, 2-44, 2-46, 2-52, 3-31, A-2, A-7, A-10, B-2, B-6, B-12, B-13, B-14, B-15, B-23, B-24, B-25, D-6, D-7
BUFNUM 2-29, B-3, B-12, B-14
BUFSIZE 2-29, 2-36, 2-37, A-2, A-5, A-7, A-16, B-3, B-12, B-13, B-14, B-15
BUFWARN 2-29
Bulk Data 2-22, 4-39, 4-41, 4-42, B-29, D-1
BURST 4-24

C

Cancel 3-7, 3-16, 3-24, 3-25, 3-26, 3-29, 3-33, 3-35, 3-36, 4-35, D-5
Capacity 2-19, 2-44, B-2, B-4, B-5
Carriage 4-40, B-8
Catalog 4-16
CDCINIT 2-35, 2-36, B-18, B-19
CDINIT 2-35, 2-36, B-18, B-19, B-20
CDRM 2-33, 2-34, A-6, A-7, A-11, A-14, A-17, A-19, B-5
CDRSC 2-33, 2-34, A-7, A-11, A-14, A-17, A-19
CHANGE 3-25, 3-34
Checkpoint 2-22, 2-46, 4-44, 4-45, B-5
CICS 2-8, 4-2, 4-17
CKPTDEF A-18
CLASS 4-22, 4-30
Clock 2-7, 2-42, 2-47, 3-13, D-2
CMD 3-30, 3-33, 3-36, 4-34
CMS 2-23, 3-29, 4-2, 4-14, 4-22, 4-23, 4-29, 4-30, 4-32, 4-34, 4-35, 4-36, 4-39, 4-41, 4-42, 4-43, 4-45, B-16, B-17, C-4, D-2
Cold-start 2-26, 2-42, 2-43, D-2
Command Authorization 2-15, 3-33
Command Transmission 2-16, 4-4, 4-31
  See also Sending Commands
COMPACT 2-30
Compaction 1-4, 2-30, 2-38, 2-46, D-2
Compatibility 2-24, 4-45, B-22
Compression 2-30, 2-38, 2-52, D-2, D-6
CONDEF 2-30, 4-33, A-18
CONFIG 2-33, A-7, A-11, A-14, A-17
CONNECT 2-11, 2-27, 2-28, 2-38, 2-41, 2-42, 3-9, 3-13, A-2, A-7
Connection Problem 3-13
Conversion 2-30, 3-22, 4-21
COS 2-35, 2-36, 2-46, A-12, B-18, B-19
Counterfeit 2-13
CPQUERY 3-33
Cryptographic 2-15, D-2
CSALIMIT 2-33, A-11
CTC 1-3, 1-4, 2-4, 2-10, 2-19, 2-21, 2-22, 2-24, 2-25, 2-24, 2-26, 2-28, 2-29, 2-39, 2-41, 3-4, 3-5, 3-6, B-4, B-5, B-13, B-14, C-2, D-1, D-2, D-4
Customization 2-2, 2-40, 2-49, 3-19, C-4

D

DALSUSER 4-18
DALUSRID 4-18
DASD 2-3, 2-21, D-4
DATE 2-7
DD 4-18, 4-19, 4-22, 4-31, 4-33, B-22, B-30
Decryption 2-14
DEFine 3-9
Delay 2-29, 2-44, 2-46, D-6
DELete 3-9
Department 2-49, 2-52
DEPT 2-49
DES 2-13, 2-14, D-2
DEST 2-30, 2-34, 3-17, 4-18, 4-19, 4-20, 4-21, 4-22, 4-23, A-7
DESTID 2-30, 4-19, 4-21
DESTSA 2-34, A-7, A-12, A-15, A-17
Dial 2-24, 2-41, 3-3, 4-43, D-5, D-7
Directory 3-28
Disable 3-19, 3-35
Diskette 4-28
DISOSS 4-2
Distribution 4-4, 4-8, 4-17, 4-18, 4-20, 4-22, 4-24
DLOGMOD 2-34, 2-37, A-7, A-12, A-15, A-17
Drain 2-28, 3-7, 3-11, 3-12, 3-35, B-3, B-4
DSN A-18, B-30
DSX 2-22
DUMMY 4-31, 4-33, B-30
DUMP 4-42, 4-43
Duplicate 3-26, D-2

E

Emulator 1-5, 2-4, 2-24
Enable 1-1, 2-35, 3-3, 3-5, 3-11, 3-12, 3-13, 3-19, 3-35, 4-41, D-4
Encountering 3-26
Encrypt 2-13, 2-14, 2-15, 2-17, 4-6, D-2
EOJ 3-35
EP 2-22, 2-24

Errors 2-42, 4-10
Execute 1-1, 1-2, 2-13, 2-14, 2-40, 2-48, 3-26, 3-27, 3-28, 3-29, 4-6, 4-8, 4-12, 4-18, 4-22, 4-28, D-7
Exit 2-2, 2-11, 2-13, 2-14, 2-15, 2-17, 2-22, 2-30, 2-31, 2-35, 2-36, 2-39, 2-40, 2-48, 2-49, 3-19, 3-20, 3-33, 4-6, 4-16, 4-29, 4-31, 4-35, 4-36, 4-37, 4-40, B-18, B-19, C-3, C-4
Extensions 2-39
External 2-39, 4-4, 4-17, 4-25, 4-39, 4-40
External writer 2-39, 4-17, 4-25, 4-40

F

Fan-out 4-19, D-2
FCB 4-22, 4-24, 4-26, 4-28, B-9
FIFO 3-15, 3-18, 3-19
FILE 3-5, 3-20, 3-24, 3-36, 4-30, B-16
File Transmission 4-4, 4-39, 4-42, 4-43
FILEDEF 3-5
Filename 4-14, 4-22, 4-30
Filetype 4-14, 4-22, 4-30
FLASH 4-22, 4-24, B-22
FLUSH 3-34, 3-35
FMH3 2-38
FMH4 2-38
FORCE 3-7, 3-35
FORM 4-22, 4-26, B-7, B-8, B-9, B-10, B-11
Formatted commands
See Global commands
FORMDEF 4-26, B-7, B-8, B-9, B-10, B-11
FREE 3-12
FTF 3-8
FTP 2-22, 4-39, 4-40, 4-41, 4-42, 4-43, 4-44, 4-45, C-5

G

Gateway 2-5, 2-6, 2-15, 2-16, 2-17
Global 3-20, 3-22, 3-24, 3-25, 3-29, 3-31, 3-33, 3-36, D-3
Global Command 3-20, 3-22, 3-24, 3-31, 3-33
GMT 2-7, 2-47, 3-13, D-2, D-3
Greenwich 2-7, 2-47, D-3

H

HALT 3-7
Hash 2-14
Held Output 4-25, 4-29
HOLD 3-12, 3-20, 3-26, 3-35, 3-36, 4-29
HOSTSA 2-33, A-7, A-11, A-14, A-17

I

ICCF 3-28, 4-2, 4-23, 4-32, 4-34, 4-37
Identification 2-13, 2-14, 2-32, 2-48, 4-9
IDTF 4-40, 4-45
IEBGENER 4-31, 4-33, B-29, B-30
IEBIMAGE 4-28
IEBPTPCH 4-12
IEHMOVE 4-39, 4-41, B-29, B-30
IKJEF53 4-29
IMAGELIB 4-28
Immediate 1-6, 2-41, 3-7, 3-26, 3-35, 4-7, 4-9, D-7
IMS 2-8
INIT 3-5
Initialization parameters
See specific parameters, such as NJEDEF
Initialize 2-7, 3-5, 3-13, B-26, B-27, B-28
Initiator 4-16
INQUIRY 3-8
Interactive 1-6, 2-8, 2-39, 2-46, 3-30, 3-36, 4-4, 4-17, 4-22, 4-23, 4-25, 4-29, 4-31, 4-39, 4-40, 4-43, 4-44, 4-45, D-2, D-5
Interfaces 2-27, 4-17
Internal reader 2-31, 3-22, 4-2, 4-6, 4-7, 4-18, 4-20, 4-31, 4-33, 4-41, B-24, B-29
Interpret 3-20, 3-26, 4-21
INTRDR 4-31, 4-33, B-30
IOBUF 2-33, A-11
IPL 2-7, 2-42
ISTATUS 2-34, A-11

J

JCT 2-39, 3-26, B-23, B-24, B-25, D-3
JECL 2-39, 2-40, 2-48, 3-27, 4-5, 4-7, 4-10, 4-23, 4-35, D-3
JESNEWS 4-27
JES2 exit 2-14, 2-15, 2-17, 2-22, 2-30, 4-31
JES2 initialization parameters
See specific parameters, such as NJEDEF
JES3 exit 4-29, 4-36
Job Control 2-39, B-23, D-3
Job copy 4-25
Job execution 2-17, 4-3
Job name 2-16, 3-20, 4-6, 4-12, 4-15
Job number 2-30, 3-24, 4-15
JOB Password 4-8
Job Priority 4-9
Job submission 4-5, 4-12, 4-14, 4-15, 4-44
Job Tracking 3-15
Job transmission 2-15, 2-44, 2-48, 2-50, 3-15, 3-17, 3-18, 4-3, 4-5, 4-13, 4-35, 4-37
JOBDEF 2-30, 2-42, 4-7, 4-9
JOBID 4-15
JOBNUM 2-42
JOENUM 2-42

JRNUM 2-29, B-3
JTNUM 2-29

K

Keyword 3-31, 4-22, A-15, B-11

L

Latitude 2-30
LDEST 4-23
LGNS 3-8
LGN1 2-36, 3-3, 3-4, 3-5, B-3
Limit 2-5, 2-8, 2-13, 2-21, 2-23, 2-46, 3-8, 3-31, 4-12, 4-39, B-18
LINE 2-26, 2-27, 2-29, 2-38, 3-8, 3-12, 3-13, 4-26, A-2, A-3, A-4, A-7, A-18, B-3, B-4
Line Password 3-13
LINECT 4-24
LINEnnnn 2-26, 2-27, 2-29, B-4
LINENUM 2-26, A-2, A-7, A-18, B-13
LINK 2-7, 3-35, A-4, A-13, B-30
LINKLIB B-30
LINKS
Load 2-21, 2-35, 3-5, 3-10, 4-43, A-18, B-24, B-28, B-29, B-30
LOADCMD 3-5
LOCAL 2-7, 3-26, 4-20, A-4, A-5, A-13, A-16, B-16
Logmode 2-32, 2-34, 2-35, 2-36, 2-37, 3-13, A-7, A-12, A-13, A-15, A-17, B-4, B-18, B-19, B-21
LOGON 2-11, 2-15, 2-27, 2-30, 2-38, 3-8, 3-13, A-7, A-18, B-2, B-3, B-4, B-5, B-18, B-19
LST 2-51, 2-52, 3-21, 3-36, 4-23
LU 1-4, 2-8, 2-35, 2-36, 2-37, 3-5, A-10, A-13, B-2, B-4, B-18, D-4
Luname 3-9, A-13

M

Mail 1-5, 2-23, 4-29, 4-39
MAS 1-6, 2-8, 2-9, 2-11, 2-21, 2-26, 2-28, 2-30, 2-38, 2-42, 3-13, 3-31, B-5, D-4
MASDEF 2-28, 3-13, B-5
MASMSG 2-30
MAXAPPL 2-33, A-11
MAXOUT 2-46
MAXSUBA 2-33, A-11
MCS 3-31
MEMBA 2-38, A-2, A-7
MEMBB 2-38, A-2, A-7
Message Transmission 2-16
  See also Sending Messages
Microfiche 1-5, 4-28
Migration 1-5, 1-6
MLU 2-29
MODEENT 2-35, A-7, A-12, A-15, A-17, B-19
Modems 2-15, 2-41, 3-13
MODETAB 2-34, 2-35, 2-37, A-7, A-12, A-15, A-17, A-19, B-19
Modification 2-8, 2-12, 2-13, 2-14, 2-16, 2-17, 2-27, 2-28, 2-39, 2-40, 2-42, 2-44, 3-9, 4-42, 4-43, B-21, B-22, B-23, B-25, B-27, B-28, C-2, C-3
Modify 2-12, 2-14, 2-16, 2-17, 2-40, 3-9, 3-33, B-3, B-18
MODS 2-11, 2-12, 2-14, 4-31
MODTAB 2-35
MSG 3-30, 3-33, 3-34, 3-36, 4-29, 4-31, 4-32
MSGCLASS 4-29, 4-31
MSGHOLD 4-29
MSNF 2-3, D-1, D-4
Multi-access spool 2-9, 2-11, 2-38, 2-39, 2-42, 3-13, 4-8, B-4, B-5
Multiple Transmitters 2-28, 2-37
MVS/BDT 1-3, 1-4, 2-2, 2-8, 2-22, 2-25, 2-49, 2-51, 3-2, 3-4, 3-8, 3-36, 4-36, 4-40, 4-44, 4-45, A-9, A-10, A-12, C-3
MVS/XA 4-7, 4-18, B-6

N

NAMES 4-32
Naming 2-8, B-2
NAT 2-29, 2-42, 3-13
NATNUM 2-29
NCC 2-17, D-4, D-5
NCP 2-3, 2-4, 2-34, 2-37, 2-46, A-6, D-4
NDHGFLG1 4-24, 4-25, 4-29
NDHGF1HD 4-25
NDHGF1LC 4-24
NDHGF1OV 4-24, 4-25
NDHGF2PR 4-25
NDHGF2PU 4-25
NDHGLNCT 4-24
NDHGLREC 4-24
NDHGRMT 3-27, 4-21
NDT 2-35, 3-6, 3-10, 3-34, A-5, A-16
NET 1-5, 2-30, 2-35, 2-37, 2-48, 2-51, 3-3, 3-5, 3-7, 3-29, 3-33, 3-34, 3-35, 4-8, 4-12, 4-16, 4-31, 4-37, A-3, A-10, D-7
NETACCT 2-30, 2-48, 4-8, 4-12, 4-16
Netdata 2-40
Network Access 2-15
Network Boundaries 2-16
Network Control 2-4, 3-3, 3-14, D-4
Network Design 2-3, 2-23
Network Device 3-11
Network Implementation 2-24, 2-40
Network Management 2-3, 2-41, 2-48, 2-52, 3-35
Network path manager
  See Path manager

Network Shut-Down 3-7
Network Start 3-3
NHDGF1HD 4-29
Nicknames 4-32
NJB 4-12
NJE Features 1-4
NJECONS 3-4, A-3, A-10
NJEDEF 2-26, 2-28, 2-29, 2-38, 2-42, A-2, A-7, A-18, B-3, B-6, B-13
NJEROUT 3-22, 3-36
NJESND 3-17, 3-36
NJHGACCT 2-52
NJHGBLDG 2-52
NJHGDEPT 2-52
NJHGETS 2-45, 2-51
NJHGJCPY 4-25
NJHGJID 2-51
NJHGJNAM 2-51
NJHGNPAS 2-14
NJHGOGR 2-51
NJHGORGN 2-13, 2-17, 2-51
NJHGORGQ 2-51, 4-12
NJHGORGU 2-17
NJHGPASS 2-14
NJHGPRGN 2-52
NJHGPRIO 3-18, 3-19
NJHGPRTN 2-52
NJHGPRTR 2-52
NJHGPUNN 2-52
NJHGPUNR 2-52
NJHGROOM 2-52
NJHGUSID 2-51
NJHGXEQN 2-51
NJHGXEQU 2-51, 4-8
NJTGALIN 2-52
NJTGSTOP 2-45
NJTGSTRT 2-45
NMRDESC 3-31
NMRFLAGT 3-32, 4-32
NMRFLAGW 3-32, 4-32
NMRFMQUL 3-31
NMRLEVEL 3-31
NMROUT 3-31
NMRPRIO 3-31
NMRROUT 3-31
NMRs 1-2, 3-28, 3-29, 3-31, 4-4, 4-31
NMRTOQUL 3-31, 4-12
NMRUCM 3-31
Nnnn 2-8, 3-13, 3-20, 4-14, B-4, B-6
Node Name 2-8, 2-47, 2-48
Node Number 2-42
Node Password 3-13
Nodename 2-26, 2-51, 3-4, 3-6, 3-8, 3-12, 3-20, 3-30, 4-5, 4-6, 4-8, 4-12, 4-18, 4-21, 4-30, B-3, D-5
NODEnnnn 2-26, 2-27, 2-30
NOH 3-24, 3-35, 3-36, 4-14
NOHEADER 4-14
NOJOB 3-34
NONETATH 2-17
NORCV 3-12, 3-35
NOTE 4-22, 4-25, 4-30, 4-32, 4-42
Notification 2-39, 3-16, 3-28, 3-29, 4-7, 4-9, 4-35, 4-36, 4-37, D-5
NOTIFY 3-34, 4-9, 4-35
NPM 1-2, 2-17, D-5
  See also Path manager
NTFY 4-37
NUMNODE 2-26

O

Offload 2-14, 2-41, 2-42, 4-8, B-24, B-26, B-27
OPNDST 2-35, 2-36, B-18, B-20
OPTCD 4-24, B-18
ORDER 3-19, 3-36
OUTCLASS 4-29
OUTDEF 2-42
OUTPUT 4-18, 4-19, 4-22, 4-29, 4-30, 4-33, 4-35, B-11
Output Distribution 4-4, 4-17
OVFL 4-24
OWNNODE 2-26, 2-38, 2-42, 2-43, A-2, A-7, A-18, B-3, B-6
OY02269 4-10
OY04055 4-35, 4-37
OY04615 2-14, 4-8
OY05811 3-15
OZ51862 4-10
OZ53846 2-42
OZ60994 2-48, 4-8
OZ62754 2-42
OZ65792 4-9
OZ74692 4-6
OZ76793 4-25
OZ78140 4-25
OZ81051 2-14, 4-8
OZ84420 3-18
OZ84814 4-35
OZ85780 4-29
OZ88264 4-10
OZ93366 4-10

P

PACCNT 2-49
Pacing 2-19, 2-34, 2-35, 2-36, 2-37, 2-44, 2-46, B-2, B-4, B-5, B-18, B-19, B-20, B-21
PACT 3-12, 3-35
Page 2-37, 3-28, 4-24, 4-26, 4-27, 4-28, B-7, B-8, B-9, B-10, B-11, B-12, B-13, B-14, B-15, D-1, D-2, D-5
Page-Mode 4-26, 4-27
PAGEDEF 4-26, B-7, B-8, B-9, B-10, B-11
PALTER 3-19, 3-23, 3-25, 3-34
Parallel 1-4, 2-3, 2-10, 2-11, 2-41, 2-44, 3-11, D-5
PARMLIB 2-7
PARMTZ 2-7

Partitioned 2-4, 2-24, 4-40, 4-45, B-29
PASSCHK 2-14
Password 2-13, 2-14, 2-15, 2-16, 2-48, 3-13, 4-6, 4-8, 4-16, A-1, B-4, D-5
PATH 2-29, 2-32, 2-34, 3-9, 3-35, A-3, A-7, A-10, A-11, A-12, A-14, A-15, A-16, A-17, A-19, B-3
Path manager 1-2, 2-7, 2-11, 2-12, 2-27, 2-28, 2-29, 2-42, 2-47, 3-9, D-2, D-4, D-5
PBRDCST 3-30, 3-31, 3-34
PCANCEL 3-25, 3-34
PDELETE 3-25, 3-34
PDEST 4-23
PDISPLAY 3-9, 3-17, 3-21, 3-34, 3-36
PDRAIN 3-12
PDS 4-40, B-30
PEND 3-7
Performance 2-3, 2-10, 2-19, 2-28, 2-37, 2-44, 2-46, B-4, B-21, C-2
Performance Management 2-44
Performance Measurement 2-45
PFLUSH 3-12
PHOLD 3-19, 3-25, 3-34
PINQUIRE 3-9, 3-34
Plan 2-2, 2-10, 2-13, 2-19, 2-26, 2-38, 2-40, 2-42, 2-49, 3-19, B-7, C-1, C-3, C-4
PLOAD 3-10, 3-35
PLU 2-35, 2-36, B-3, B-18, B-19, B-20, B-21
PNAME 2-49
PNET 2-40, 3-6, 3-7, 3-9, 3-10, 3-12, 3-34, 3-35, A-5, A-16, A-17
PNODE 3-10, A-5, A-16
Port 2-5, 2-24, 2-26, 2-39, 3-5, B-16, D-4, D-7
PRCVPAC 2-35, A-12
PRDEST 4-20
Predefined 2-11, B-18
PRELEASE 3-19, 3-25, 3-34
PRI 3-36, 4-18, 4-21, 4-22, 4-24, 4-42, 4-43, A-10
PRINT 4-18, 4-21, 4-22, 4-24, 4-42, 4-43
Printer 1-5, 2-22, 3-22, 3-28, 4-2, 4-17, 4-20, 4-22, 4-23, 4-24, 4-25, 4-26, 4-27, 4-28, 4-42, B-7, B-8, B-9, B-10, B-11, D-1, D-5, D-7
Priority 2-40, 2-44, 2-46, 3-14, 3-15, 3-18, 3-19, 3-25, 4-7, 4-9, 4-10, B-2, B-19, D-3, D-5
PRNODE 2-31, 4-20
Problem Determination 3-13
PROFILE 3-6
PROFS 4-2, 4-30
Propagate 2-13, 2-14, 2-28, 4-9
Propagated 2-13, 2-14, 4-9
Propagation 2-14, 2-17
PRT 3-22, 4-7, 4-9, 4-22
PRTY 4-7, 4-9
PSF 4-26, 4-27, B-7, B-8, B-9, B-10, B-11, D-5
PSNDPAC 2-35, A-12, A-15, A-17, B-19
PSTART 3-6, 3-12
PSTOP 3-7, 3-12
PUDEST 4-20
PUN 2-51, 3-21, 4-14, 4-18, 4-22, 4-23, 4-30, 4-32, 4-42, 4-43, B-16, B-17
Punch 1-2, 1-5, 2-22, 2-31, 2-39, 2-49, 2-51, 2-52, 3-18, 3-20, 3-22, 3-27, 4-2, 4-14, 4-18, 4-20, 4-22, 4-23, 4-25, 4-28, 4-32, 4-42, 4-43, 4-44, B-16, B-17, D-7
PUNNODE 2-52
PUNODE 2-31, 4-20
PUNTOUS 2-52
Purge 2-40, 2-48, 2-49, 2-51, 3-24, 3-25, 3-27, 3-28, 3-34, 3-36, 4-7, D-2
Purges 3-25, 3-27, D-2
PXMIT 3-25, 3-31

Q

QUERY 3-17, 3-20, 3-33, 3-36
QUICK 3-7, 3-35

R

RACF 2-13, 2-14, 2-16, 2-17, 4-8, 4-16, 4-45
RACINIT 2-14
RACXTRT 2-14
Range 2-30, 3-8, 3-20, D-2
RCV 3-12, 3-35
RDR 2-51, 3-21, 3-22, 3-36, 4-33
RDRCHAR 4-33
RDREXIT 2-40
RDRLIST 4-30, 4-43
READ 4-14, 4-42, 4-43, B-16
READCARD 4-43
READERnn 2-31, 4-6, 4-20
Ready 3-25, D-1, D-4
RECEIVE 4-22, 4-25, 4-29, 4-40, 4-43, B-22
Receivers 2-17, 2-28, 2-29, 2-37, 2-46, 3-11, 3-12, 3-35, B-3, B-4, B-24
Record length 4-10, 4-24, 4-30, 4-40, B-29
Recovery 2-3, 2-10, 2-41, 3-26
Redirect 3-22
Reorder 3-36
Requeue 3-26
REROUTE 3-10, 3-22
Restart 2-28, 2-42, 3-7, 3-9, 3-11
RESTMAX 2-29, 2-41
RESTNODE 2-29
RESTTOL 2-29
Rnnnn 2-31, 4-18, 4-20
ROOM 2-49
ROUTE 3-9, 3-35, 4-12, A-4, A-13
Routecodes 4-19
ROUTES 3-35
Routing Output 4-18, 4-22, 4-23
RPL 2-37, B-12, B-13, B-14
RSCS exit
RTAM 2-24
RU 2-36, 2-37, A-12, A-15, B-18, B-19, D-6

S

Sample Network A-1
Satellite 2-10, 2-19, 2-46
Scheduler 2-44, D-6, D-7
SDLC 2-3, 2-4, 2-10, 2-24, 2-41, B-2, B-4, B-5, D-6
SDSF 3-17, 3-20, 4-29, 4-33, D-6
Search 3-17, D-6
Secondary 2-11, 2-21, 2-35, 2-36, 2-37, 2-39, 2-41, 3-10, 4-15, 4-33, A-18, A-19, B-2, B-4, B-5, B-6, B-21
Security 2-3, 2-5, 2-13, 2-14, 2-16, 2-21, 4-8, D-5, D-6
SEND 2-23, 3-29, 4-22, 4-25, 4-29, 4-30, 4-31, 4-35, 4-36, 4-42, 4-43, 4-44, 4-45, B-30
SENDFILE 2-23, 4-22, 4-25, 4-29, 4-30, 4-35, 4-36, 4-42, 4-43, 4-44, 4-45
Sending Commands 3-29, 3-30, 3-31, 3-36, 4-33
Sending Messages 3-29, 3-30, 3-31, 4-31
SESSION 2-29
Session Establishment 2-35
Session Initialization B-18
SETUP 4-7
SHARE 2-11, 2-12, 2-14, 4-31, B-26, B-28
Shutdown 3-7, 3-35
SID 2-28
SIMLOGON 2-35, B-18
SLU 2-35, 2-36, B-3, B-18, B-19, B-20, B-21
SMF 2-13, 2-42, 2-47, D-6
SMF exit 2-13
SMF record 2-7, 2-45, 2-46, 2-47, 2-49, 3-14, 3-26
SMSG 3-30, 4-32, 4-34
Source 2-15, 2-16, 2-35, 2-38, 3-31, 4-24, B-22, B-24, B-25, B-26, B-27, B-28
Span 1-4, 2-7, 2-37, 2-47, 4-26, B-12, B-23
Special Local 4-19
SPL 2-26, 2-27, 2-28, B-6
Splid 3-24, 3-36
SPOOL 2-11, 2-42, 4-14, 4-22, 4-31, A-9, A-18, B-16, D-6, D-7
Spool Offload 2-41, 2-42, B-26, B-27
SPOOLDEF 2-42, A-18
Spoolid 3-20, D-6
SPOOLNUM 2-42
SRNUM 2-29
SSCPID 2-33, A-11, A-14, A-17
SSNDPAC 2-35, 2-36, 2-37, A-7, A-12, A-15, A-17, B-19, B-20, B-21
SSOB 4-17
START 2-35, 3-5, 3-12, 3-35
STNUM 2-29
SUBAREA 2-34, A-7, A-11, A-14, A-17
Subtract 1-2, 2-17, B-14, D-5
SVC 4-18
Symbolic Destination 4-21
SYNCTOL 3-13
SYSAFF 4-8
SYSLOG 2-46, 3-14
SYSTIME 2-7

T

TAG 3-18, 4-14, 4-22, 4-23, 4-24, 4-42, B-16, B-17
Tape 2-11, 2-12, 2-14, 2-23, 2-41, 4-31, 4-39, 4-41, B-29, B-30
TELL 4-32
Terminology 1-1, 1-2, 2-8
Testing 1-5, 1-6, 2-4, 2-37, 2-39, A-18
Threshold 2-29
Time zone 2-7, 2-47
TOD 2-7, 2-42, 2-47, 3-13, B-30, D-2
Topology 2-3, A-7, D-5
TPBF 2-29
TPDEF 2-29, 2-36, 2-37, 2-38, A-2, A-7, B-3, B-12, B-13, B-14, B-15
Trace 2-37, 3-35
Traffic 1-2, 2-5, 2-6, 2-19, 2-29, 2-46, 2-47, B-2, B-4, B-5
TRAN 3-22, 3-24, 3-34, 3-36
TRANSFER 3-22, 3-34
Translation 3-18, 3-19, 3-20, 4-8, 4-16
Transmission Priority 2-46
Transmitter 2-17, 2-28, 2-29, 2-37, 2-39, 2-44, 2-45, 2-46, 2-51, 3-11, 3-12, 3-26, 3-35, B-3, B-4, B-28
Transparency 3-31, 4-10, 4-24
TSO 2-8, 2-23, 2-31, 2-39, 3-20, 3-22, 3-25, 3-32, 4-2, 4-6, 4-12, 4-18, 4-21, 4-22, 4-23, 4-25, 4-29, 4-30, 4-31, 4-32, 4-33, 4-35, 4-36, 4-39, 4-40, 4-41, 4-43, 4-44, 4-45, C-3, D-7
TSO/E 2-39, 4-2, 4-6, 4-18, 4-22, 4-25, 4-29, 4-30, 4-31, 4-35, 4-36, 4-39, 4-40, 4-43, 4-44, 4-45, C-3, D-7
TYPE 2-33, 2-34, 3-12, A-3, A-4, A-7, A-10, A-11, A-12, A-13, A-14, A-15, A-17, A-19

U

UCB 2-24
UCS 4-28
Unauthorized 2-13, 2-47
Undefined Destination 3-26
UNIT 2-27, 2-29, 4-16, A-2, A-7, A-18, B-3, B-4, B-30
Unknown 3-26, 3-27, 3-28
Unload 4-41, B-29, B-30
User Identification 2-13, 2-48
User sections 2-39, B-22, B-23, B-25, B-27
Utilization 2-21, 2-28, 2-37, 2-44, 2-46, B-5

V

Validation 2-14, 3-33, 4-6, 4-8
VBUILD 2-33, 2-34, A-7, A-11, A-12, A-14, A-15, A-17, A-19
Verification 2-13, 2-14, 4-6, 4-8, D-6
VMSG 4-31, 4-42

VNET 1-5, D-7
VPACING 2-34, 2-37, 2-46, A-7, A-12, A-15, A-17, A-19, B-20
VSAM 4-42, 4-43, 4-45, B-29, B-30
VTAM Parameters 2-32
VTAMLST 2-32, 2-34, 3-13, A-14

W

Warm-start 2-8, 2-11, 2-12, 2-26, 2-42, D-8
Workload 1-5, 1-6, 2-19, 2-29, 2-42
Workstation 1-6, 2-8, 2-21, 2-22, 2-29, 3-24, 3-27, 3-30, 4-4, 4-17, 4-18, 4-20, 4-32, 4-41, D-6, D-8
WTR 3-20

X

XEQNODE 2-31
Xmit 2-45, 3-17, 3-25, 4-10, 4-12, 4-31
XMT 3-17, 3-19, 3-21, 3-36

Z

Zone 2-7, 2-46, 2-47

Numerics

1Q5DI 4-37
1RA0I 3-15, 4-37
1RB5I 3-15, 4-37
3088 2-4, 2-24, 2-39, D-2
3800 1-5, 2-46, 4-24, B-7, B-9, B-28
3820 4-26, B-7

READER'S COMMENT FORM

Title:

NJE Installation, Operation and Use
with JES2 and Other Systems
Washington Systems Center
Technical Bulletin GG22-9339-00

You may use this form to communicate your comments about this publication, its organization, or subject matter, with the understanding that IBM may use or distribute whatever information you supply in any way it believes appropriate without incurring any obligation to you.

Please state your occupation: _____

Comments:

Please mail to:

John M. Hutchinson
ISG Washington Systems Center
IBM Corporation
18100 Frederick Pike
Gaithersburg, MD 20879

Cut or Fold Along Line

Reader's Comment Form

Fold and tape | Please Do Not Staple | Fold and tape

NO POSTAGE
NECESSARY
IF MAILED
IN THE
UNITED STATES

BUSINESS REPLY MAIL

FIRST CLASS PERMIT NO. 40 ARMONK, N.Y.

POSTAGE WILL BE PAID BY ADDRESSEE:

J. M. Hutchinson
ISG Washington Systems Center
IBM Corporation
18100 Frederick Pike
Gaithersburg, MD 20879

Fold and tape | Please Do Not Staple | Fold and tape

IBM

READER'S COMMENT FORM

Title:

NJE Installation, Operation and Use
with JES2 and Other Systems
Washington Systems Center
Technical Bulletin GG22-9339-00

You may use this form to communicate your comments about this publication, its organization, or subject matter, with the understanding that IBM may use or distribute whatever information you supply in any way it believes appropriate without incurring any obligation to you.

Please state your occupation: _____

Comments:

Please mail to:

John M. Hutchinson
ISG Washington Systems Center
IBM Corporation
18100 Frederick Pike
Gaithersburg, MD 20879

Cut or Fold Along Line

Reader's Comment Form

Fold and tape | Please Do Not Staple | Fold and tape

NO POSTAGE
NECESSARY
IF MAILED
IN THE
UNITED STATES

BUSINESS REPLY MAIL

FIRST CLASS PERMIT NO. 40 ARMONK, N.Y.

POSTAGE WILL BE PAID BY ADDRESSEE:

J. M. Hutchinson
ISG Washington Systems Center
IBM Corporation
18100 Frederick Pike
Gaithersburg, MD 20879

Fold and tape | Please Do Not Staple | Fold and tape

IBM®

READER'S COMMENT FORM

Title:

NJE Installation, Operation and Use
with JES2 and Other Systems
Washington Systems Center
Technical Bulletin GG22-9339-00

You may use this form to communicate your comments about this publication, its organization, or subject matter, with the understanding that IBM may use or distribute whatever information you supply in any way it believes appropriate without incurring any obligation to you.

Please state your occupation: _____

Comments:

Please mail to:

John M. Hutchinson
ISG Washington Systems Center
IBM Corporation
18100 Frederick Pike
Gaithersburg, MD 20879

Cut or Fold Along Line

Reader's Comment Form

Fold and tape | Please Do Not Staple | Fold and tape

NO POSTAGE
NECESSARY
IF MAILED
IN THE
UNITED STATES

BUSINESS REPLY MAIL

FIRST CLASS PERMIT NO. 40 ARMONK, N.Y.

POSTAGE WILL BE PAID BY ADDRESSEE:

J. M. Hutchinson
ISG Washington Systems Center
IBM Corporation
18100 Frederick Pike
Gaithersburg, MD 20879

Fold and tape | Please Do Not Staple | Fold and tape

IBM

GG22-9339-0

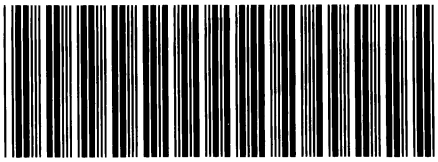

NJE Installation, Operation and
Use with JES2 and Other Systems

Printed in U.S.A.

GG22-9339-00

GG22-9339-00