NO. 2101819
SHEET 0
OF 23

DIAGNOSTIC TEST

DIPAL NAME IS DT21

TITLE WRITE TEST DATA - DT 0021

MACH.TYPE 1311 BY GIF APPR. CSF DATE 4/8/63

ENGINEERING CHANGE HISTORY

E/C NO.	DATE	SHEETS AFFECTED
404860-A	5-3-63	1 - 27
404980	5-7-64	24-26
412537	12-7-64	16-24, Shts 25 & 26 CANCEL
412549	4-7-65	16-23, 24 CANCEL

E/C NO.	404860-A	404980	412537	412549			
DATE	5-3-63	5-7-64	12-7-64	4-7-65			

X LGS

1311 DISK DIAGNOSTIC TEST 0021

TEST DATA PROGRAM

A. SCOPE:

This program writes the test data, to be used with DT0022, on cylinder 97 of the CE Disk Pack. The CE Disk Pack can be on any Disk Storage Drive unit, but it must contain the indelible addresses of the first (0) unit. The indelible addresses may be written using DT0020.

B. SETUP:

1. While running the test, the program switches have the following functions:

Switch 1	ON	Bypasses error typeouts
	OFF	Allows error typeouts
Switch 2		Not used
Switch 3	ON	Halts on error
	OFF	Bypasses halt on error
Switch 4	ON	Loops test
	OFF	Halts on test completion

2. During the keying in of data if the user makes an error while typing on the console typewriter, he can turn program Switch 3 on, press RELEASE and START, and then turn Switch 3 off and re-enter the data.

3. Normal setting of console switches:

   Program Switches---AS DESIRED

   Data Switches-----PROGRAM

4. The user should insure that the PACK ON and READY LIGHTS on the Disk Storage Drive are ON, and the WRITE ADDRESS and the COMPARE DISABLE Switches are OFF. (Compare Disable, IN)

C. DETAILED EXPLANATION:

The test data required for DT0022 is written on cylinder 97 of the CE Disk Pack by this test. The correct indelible addresses must be on the CE Disk Pack before this test will operate properly, and these addresses must be between 00000-19999.

The test has been written in routine form, and groups of routines perform logical functions. The routines that perform logical functions are:

Control Routine

Seek Cylinder Routine

Generate Test Data Routine

Write Test Data Routine

Check Test Data Written Routine

Test Complete Routine

Error Routine

The Control Routine is comprised of a group of routines. The name of the test, switch settings, and pertinent operating instructions are typed out during the execution of the Control Routine. The module number of the Disk Storage Drive unit on which the CE Pack is installed must be entered from the console typewriter during the execution of the Control Routine. After the module number has been keyed in, the drive code digit is calculated and stored in the Disk Control Field sub-instructions. The Drive code is calculated by multiplying the module number by two and adding one to the product. Thus the results are:

Module No.	Drive Code
0	1
1	3
2	5
3	7

The last routine of the Control Routine verifies that the CE Pack is on the Disk Storage Drive Unit being addressed. The verification consists of accessing to cylinder 00 and attempting to read a sector with head 0 and head 1. A file address check should occur on each attempt. Then an access to cylinder 34 is executed, and an attempt is made to read a sector with heads 2 and 3. File address checks should occur on both of these attempts. Similar attempts are made to read sectors on cylinders 35, 36, and 99 using heads 4 and 5, 6 and 7, and 8 and 9 respectively.

If file address checks do not occur on all the reads, it is assumed that the CE Pack is not installed and the message "Disk Pack on 1311 is not CE Disk Pack--Don't use Program" is typed out. The program halts after typing this message, and if the START key is depressed, the Control Routine is repeated.

The Seek Cylinder Routine positions the access mechanism at cylinder 97 by executing a seek instruction and then attemtping to read a sector on cylinder 97. If no file address check occurs, the access mechanism is assumed to be at cylinder 97. If a file address check occurs, the complete track is read, the cylinder number is calculated from the data read, and an error message is typed out indicating the cylinder at which the access mechanism is positioned and that it should be 97. This routine will be repeated until the access mechanism is positioned at cylinder 97.

The Generate Test Data Routine is executed after the access mechanism has been positioned at cylinder 97. Two thousand characters of data are generated in the write area (labeled A1) of core. The format is:

X00000000011111111112222222222...99999999990000000000

1111111111...9999999999

X is the head number of the particular track on which the data will be written; therfore, all tracks will contain the same information except for the first character of the track. This routine also insures that all of the VRC indicators are OFF or are turned OFF.

The Write Test Data Routine writes the test data on cylinder 97. A group mark is set in the proper location so that the data can be written using the wrong length record mode. After the data has been written, the ANY DATA CHECK is interrogated. If it is ON, the Error Routine is entered in order that a message can be typed out indicating which indicators are ON. After the error messages have been typed out, another attempt is made to write the test data. A read back check is executed after the test data has been written without turning on the ANY DATA CHECK. After the read back check, the ANY DATA CHECK is interrogated again. If it is on, the Error Routine is entered to type out a message indicating which indicators are on. The read back check instruction is attempted again after the error message is typed out. If no VRC indicator was turned on during the execution of the read back check instruction, the Check Test Data Written Routine is entered. This routine consists of instructions to read the track previously written into a read area (labeled A2) and to make a program compare against the write data. If the read and write data compare, a check is made to see if all ten tracks in the cylinder have been written. If not, updating instructions are executed and the Write Test Data Routine is reentered. If the read and write data do not compare, an error message is typed out, and then the check to see if all tracks have been written is made. The Write Test Data and the Check Test Data Written Routines are executed in order until all tracks in cylinder 97 have been written.

The Test Complete Routine is entered after all tracks have been written. In the Test Complete Routine a Check is made of Program Switch 4. If it is on, the entire Test is repeated until switch 4 is turned OFF. With switch 4 OFF, switch 1 is interrogated. If it is OFF, the test completed message is typed out and the program halts. If switch 1 is on, a check is made of the error map to determine if any errors occurred while running the test. If any errors occurred, a message that the error type outs were suppressed procedes the test complete message.

The Error Routine contains the instructions to type out the error messages, log the fact that an error occurred, and return the program to the proper place after the error message has been typed out.

D. ERROR ANALYSIS:

ERROR OCCURRED BUT SW 1 WAS ON THUS NO ETO. ER 30 01914

This error typeout will occur in the test complete routine if the user has switch 1 ON and an error occurred during the running of the test. ETO = error typeout.

ACCESS AREM AT XX SHD BE 97. ER22 01014

This typeout will occur if the access arm fails to seek cylinder 97 in order that the test data can be written on it. XX is the cylinder at which

the access arm was positioned. It should have been 97.

All other error typeouts follow the following format:

AAAAAAAAAABBBBBBB (XX) CYL ZZ HD Y

AAAAAAAAA, is the program disk operation that the error occurred on. The disk operation are all WITH WRONG LENGTH RECORD CHECK.

The messages that can be typed are:

WRITE 20 SCT ER3 01554

The program is writing 20 sectors (1 track) of test data from area A1 in memory onto a track on the Disk Pack.

READ BACK COMP ER4 01614

The program is read back track check of the data written onto the Disk Pack out of area A1 in memory.

READ 20 SCTR ER5 01674

The program is reading the 20 sectors written, back into area A2 in memory.

PROG COMPARE ER6 01758

The program is doing a compare of the 20 sectors of data written from area A1 and read back into area A2.

SEEK ER8 00942

The program has performed a seek operation.

BBBBBBBB(XX), is the error that occurred and turned on Any Data Check. Where XX is the indicator.

The messages that can be typed are:

ADS CK (36)	ER10	02058
WLR CK (37)	ER11	02130
OVFO CK (38)	ER12	02154
RD CK (06)	ER14	02190
WR CK (07)	ER15	02214
MBR-E (16)	ER16	02238
MBR-0 (17)	ER17	02262
FILE NO IND (39)	ER13	02154

The program found any file indicator on, but all the indicators which turn it on are off.

DATA NOT EQUAL ER7 01782

The 20 sectors of test data written onto the Disk Pack does not compare with the data that was read back into memory.

SELECT LOCK ER19 02058

Self-explanatory

CYL ZZ HY Y ER 20 02370

This is the rest of the error typeout that tells the user which cylinder (CYL) the error occurred on, where ZZ will be from 00 to 99. And also which head (HD) or track was

in error on that cylinder, where Y will be from 0 to 9.

E. SERVICE HINTS:

This test is not intended to be a diagnostic; however, all the test data that is written on the file is read back into memory and compared. If the program runs successfully, the assumption may be properly made that the computer can write to and read from the Disk Storage Drive.

DT 0021 - 1311 TEST DATA PROGRAM

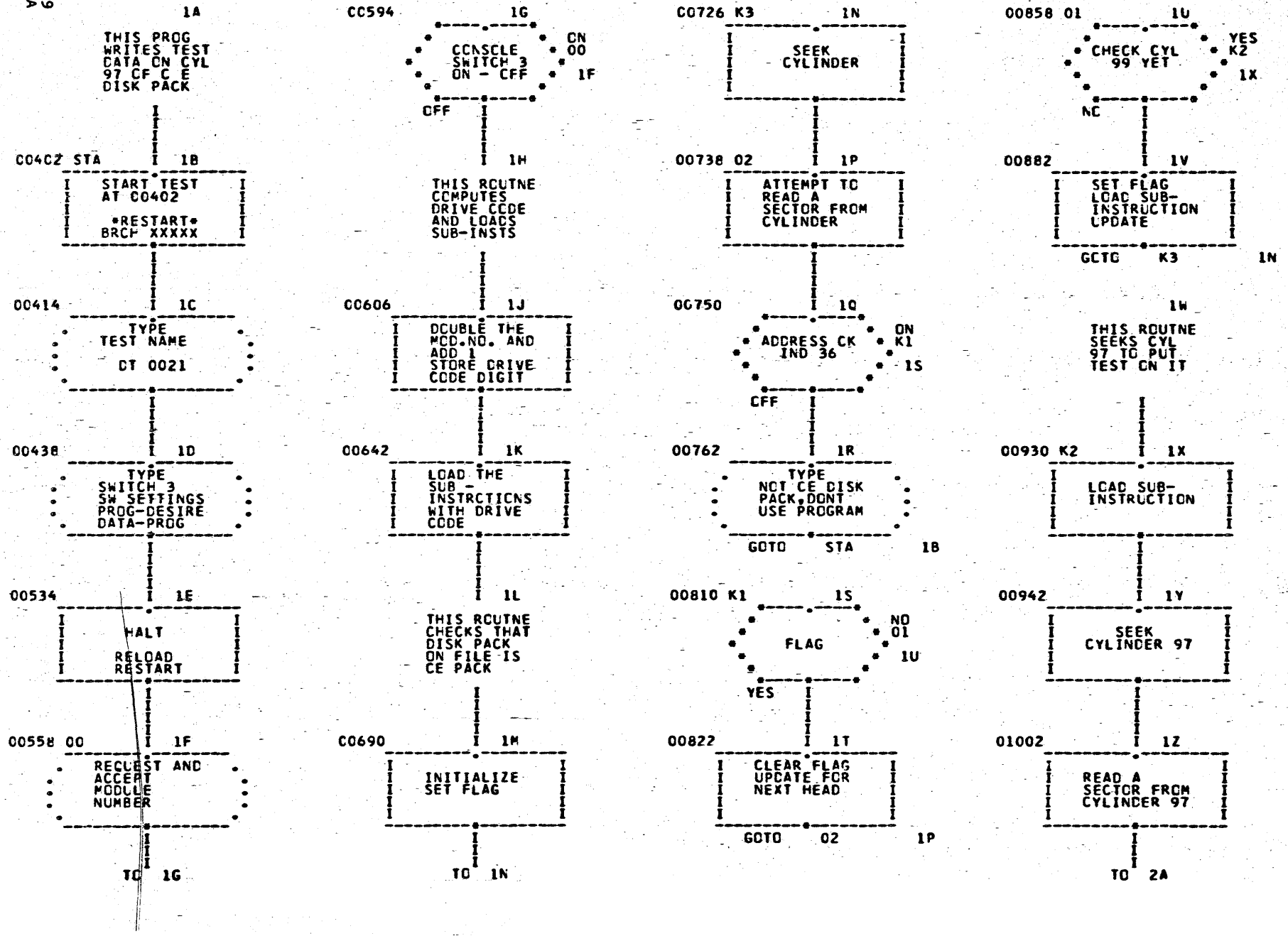

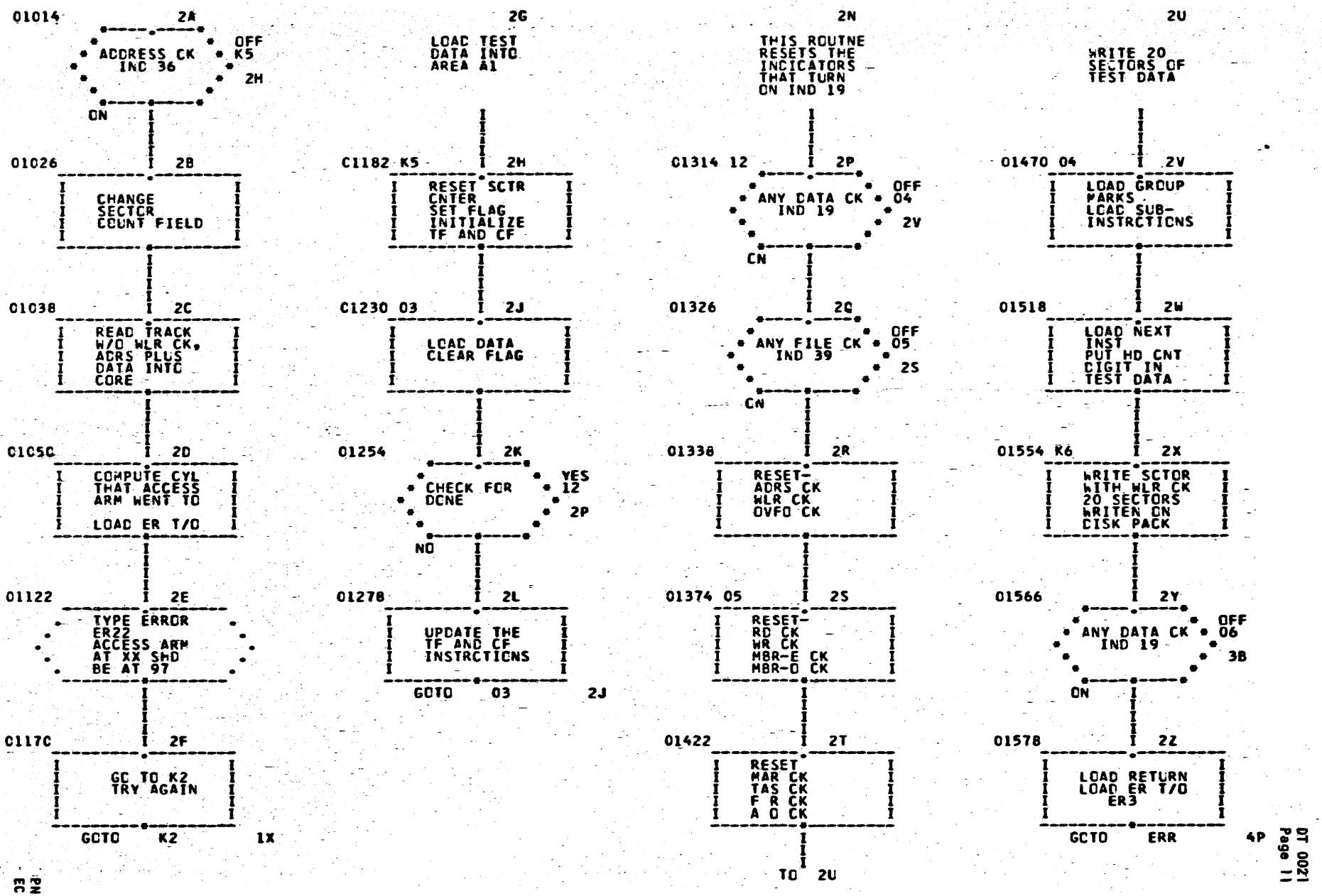

PN 2161819
EC 404860A

DT 0021 - 1311 TEST DATA PROGRAM

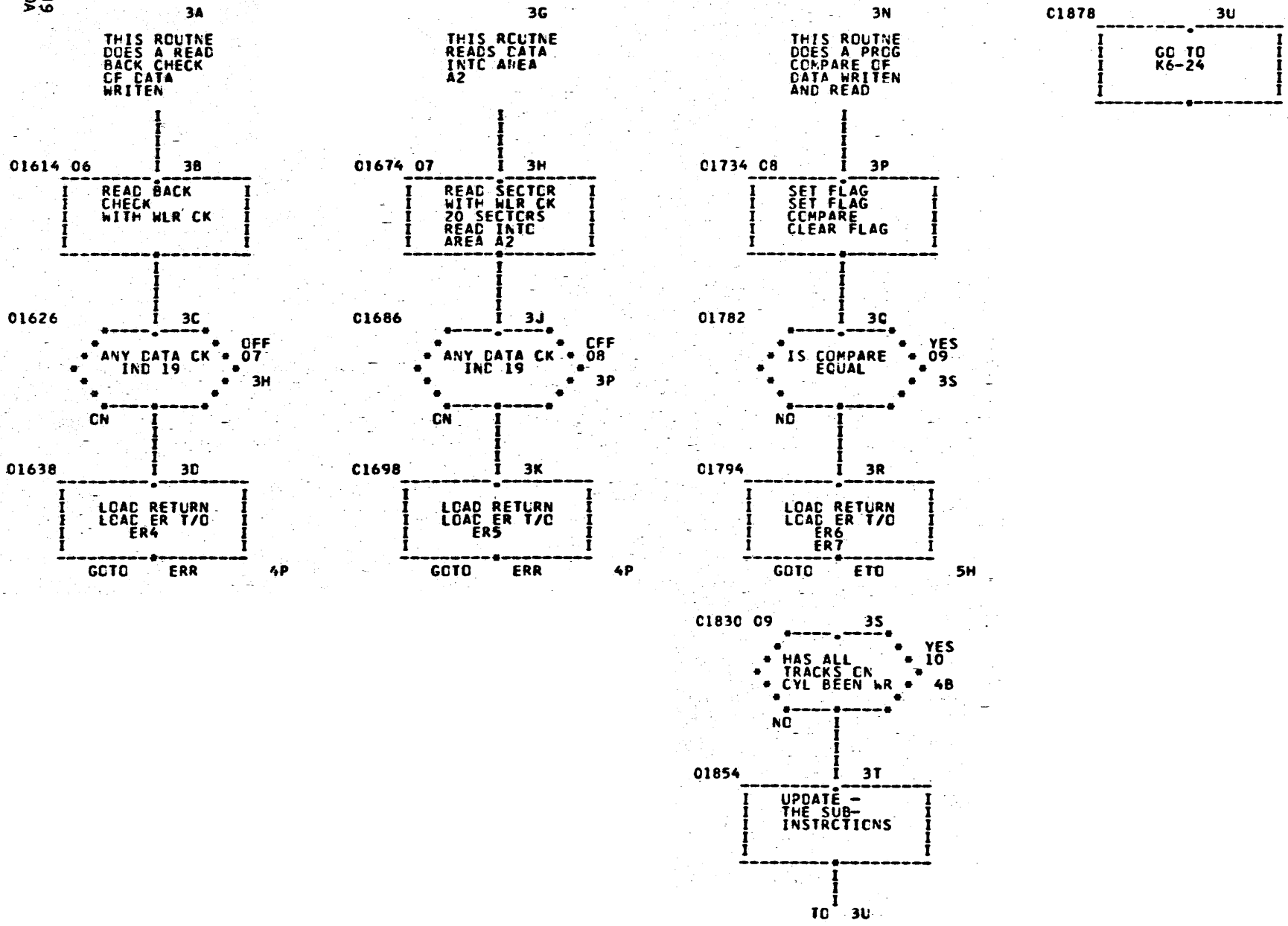

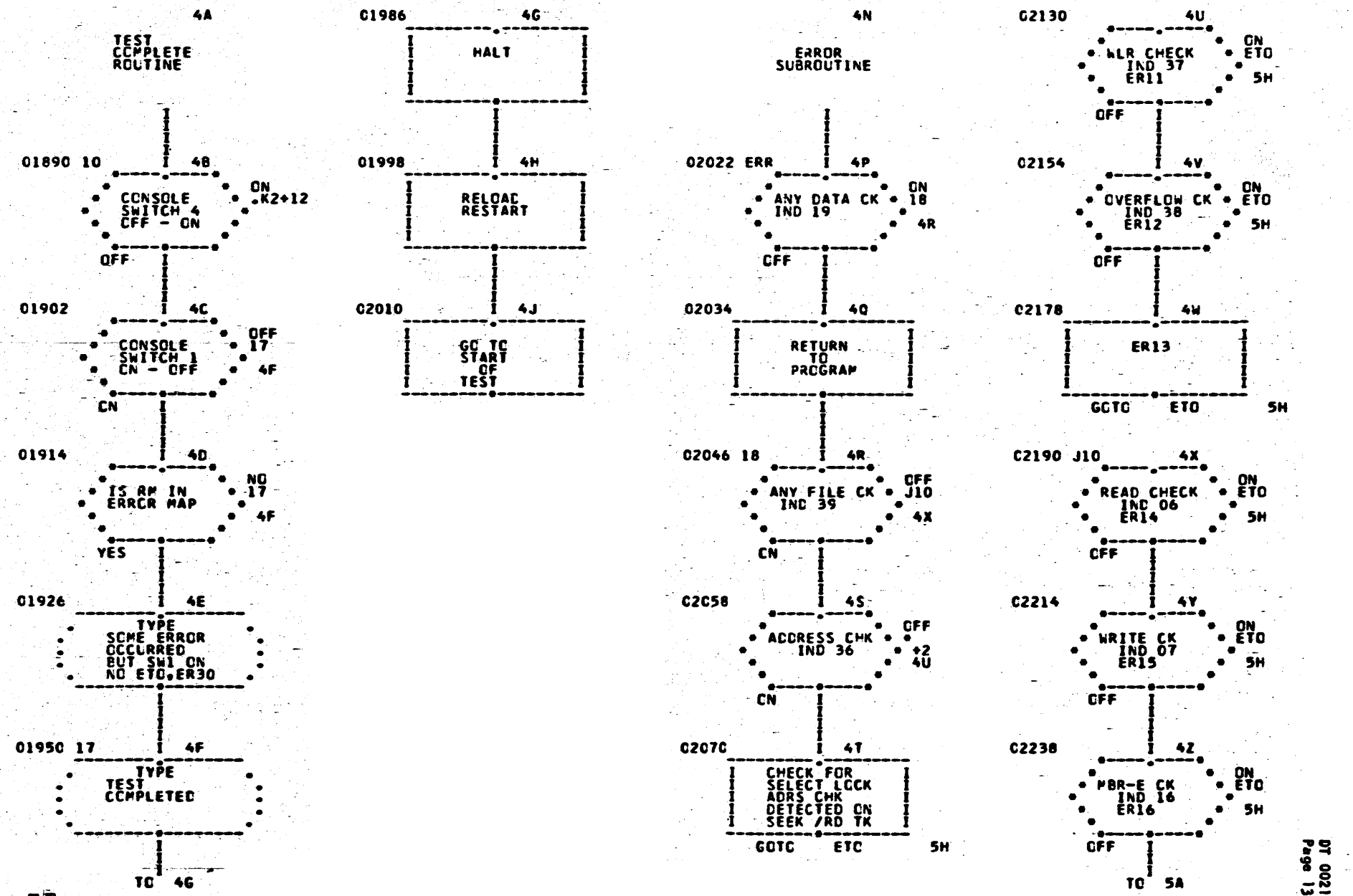
4A
TEST COMPLETE ROUTINE
01890 10 4B
CONSOLE SWITCH 4 OFF - ON
ON K2+12
OFF
01902 4C
CONSOLE SWITCH 1 ON - OFF
OFF 17 4F
ON
01914 4D
IS RM IN ERROR MAP
NO 17 4F
YES
01926 4E
TYPE SOME ERROR OCCURRED BUT SW1 ON NO ETO, ER30
01950 17 4F
TYPE TEST COMPLETED
TO 4G
01986 4G
HALT
01998 4H
RELOAD RESTART
02010 4J
GO TO START OF TEST
4N
ERROR SUBROUTINE
02022 ERR 4P
ANY DATA CK IND 19
ON 18 4R
OFF
02034 4Q
RETURN TO PROGRAM
02046 18 4R
ANY FILE CK IND 39
OFF J10 4X
ON
02058 4S
ADDRESS CHK IND 36
OFF +2 4U
ON
0207C 4T
CHECK FOR SELECT LOCK ADRS CHK DETECTED ON SEEK /RD TK
GOTO ETO 5H
02130 4U
WLR CHECK IND 37 ER11
ON ETO 5H
OFF
02154 4V
OVERFLOW CK IND 38 ER12
ON ETO 5H
OFF
02178 4W
ER13
GOTO ETO 5H
02190 J10 4X
READ CHECK IND 06 ER14
ON ETO 5H
OFF
02214 4Y
WRITE CK IND 07 ER15
ON ETO 5H
OFF
02238 4Z
PBR-E CK IND 16 ER16
ON ETO 5H
OFF
TO 5A

DT CC21 - 1311 TEST DATA PROGRAM

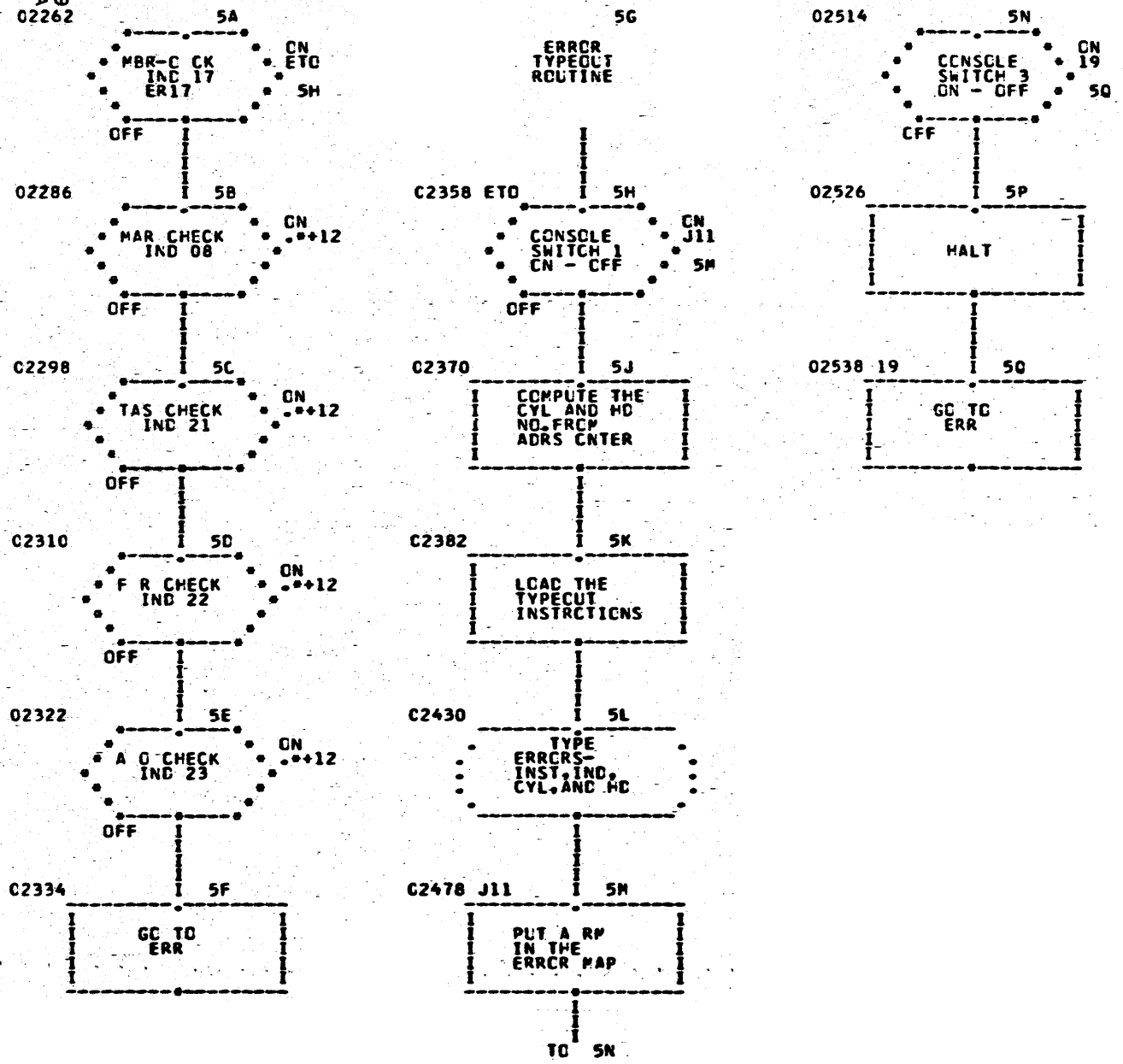

SAMPLE OUTPUT FOR DT 0021

```
DT 0021 - TEST DATA PROGRAM
SW 3 ON FOR CORRECTING KEY IN
SWITCH SETTINGS
PROGRAM - AS DESIRED
DATA--PROG
KEY IN 1 DIGIT MODULE NUMBER 0
TEST COMPLETED
```

```
00010*
00020*          DT 0021 - TEST DATA PROGRAM
00030*
00040*
00050*          THIS PROGRAM WRITES TEST
00060*          DATA ON CYLINDER 97 OF THE
00070*          CE DISK PACK FOR 1311
00080*          DISK STORGE DRIVE
00090*
00100*
00110*          CONTROL ROUTINES
00120*
                DORG 00402                                          00402
00140 STA       B    *+12,,,        RESTART                         00402 49 00414 00000
00150           RCTY ,,,            RETURN CARRIAGE                 00414 34 00000 00102
00160           WATY T1,,,          TYPE TEST NAME                  00426 39 02551 00100
00170*
00180*          TYPE OUT SWITCH SETTINGS
00190*
00200           RCTY ,,,            RET CARR                        00438 34 00000 00102
00210           WATY T30,,,         TYPE SW3 ON                     00450 39 02907 00100
00220           RCTY ,,,            RETURN CARRIAGE                 00462 34 00000 00102
00230           WATY T4,,,          TYPE SW SETTING                 00474 39 02607 00100
00240           RCTY ,,,            RETURN CARRIAGE                 00486 34 00000 00102
00250           WATY T5,,,          TYPE SENSE--OFF                 00498 39 02639 00100
00260           RCTY ,,,            RETURN CARRIAGE                 00510 34 00000 00102
00270           WATY T6,,,          TYPE DATA-PROG                  00522 39 02681 00100
00280           H    ,,,            HALT                            00534 48 00000 00000
00290           TFM  STA+6,*+12,,   LOAD RESTART                    00546 16 00408 -0558
00300*
00310*          REQUEST AND ACCEPT MODULE NO.
00320*
00330           RCTY ,,,            RETURN CARRIAGE                 00558 34 00000 00102
00340           WATY T7,,,          RQT MOD NO.                     00570 39 02703 00100
00350           RNTY N,,,           KEY IN NUMBER                   00582 36 03949 00100
00360           BC3  *-12,,,        SW3 ON TYP AGAIN                00594 46 00582 00300
00370*
00380*          THIS ROUTINE COMPUTES DRIVE
00390*          CODE DIGIT FROM MODULE NO.
00400*          AND LOADS SUB-INST WITH
00410*          DRIVE CODE DIGIT
00420*          AND STORE MATH TABLES
00430*
00440           MM   N,02,10,       MULTIPLY                        00606 13 03949 000-2
00450           AM   99,01,8,       ADD 1                           00618 11 00099 0-001
00460           TD   M,99,,         RELOAD MOD NO.                  00630 25 03953 00099
00470           TD   S1,M,,         LOAD MOD NO.                    00642 25 03966 03953
00480           TD   S2,M,,         LOAD MOD NO.                    00654 25 03980 03953
00490           TD   S3,M,,         LOAD MOD NO.                    00666 25 03994 03953
00500           TR   TAB,00100,,    STORE MATH TABLES               00678 31 03646 00100
00510*
00520*          THIS ROUTINE CHECKS THAT
00530*          THE DISK PACK ON STORAGE
00540*          UNIT IS THE CE DISK PACK
00550*
00570           TFM  S3+5,00000,,   LOAD SUB-INST                   00690 16 03999 -0000
00580           TFM  K4+11,CC,,     LOAD INST                       00702 16 00905 -4012
00590 K3        K    S3,00701,,     SEEK CYLINDER                   00714 34 03994 00701
```

```
00600          RN    S3,00702,,      READ A SECTOR          00726 36 03994 00702
00610          BI    K1,03600,,      ADDRESS CHECK          00738 46 00798 03600
00620          RCTY  ,,,             RET CARR               00750 34 00000 00102
00630          WATY  T20,,,          TYPE DO NOT USE        00762 39 02793 00100
00640          H     ,,,             HALT                   00774 48 00000 00000
00650          B     STA,,11,        START OVER             00786 49 00402 0000-
00660 K1       BNF   *+48,K1-1,,     CK FOR FLAG            00798 44 00846 00797
00670          CF    K1-1,,,         CLEAR FLAG             00810 33 00797 00000
00680          AM    S3+5,20,,       UPDATE NEXT HD         00822 11 03999 -0020
00690          B     K3+12,,,        LOOP BACK              00834 49 00726 00000
00694          SF    K1-1,,,         SET FLAG               00846 32 00797 00000
00696          BI    *+12,0600,,     TURN OFF RD CK         00858 46 00870 00600
00700          CM    S3+3,199,9,     IS LAST CYL            00870 14 03997 00J99
00710          BE    K2,,,           BRCH EQUAL             00882 46 00930 01200
00730 K4       TF    S3+5,99999,,    LOAD SUB-INST          00894 26 03999 99999
00740          AM    K4+11,05,,      UPDATE INST            00906 11 00905 -0005
00750          B     K3,,,           LOOP BACK              00918 49 00714 00000
00760*
00770*           THE NEXT ROUTINE SEEKS CYL 97
00780*           IN ORDER TO PUT TEST DATA ON IT
00790*
00800 K2       TFM   S3+5,19400,,    LOAD SUB-INST          00930 16 03999 J9400
00810          K     S3,00701,,      SEEK CYLINDER 97       00942 34 03994 00701
00820          BNI   *+48,01900,,    ANY DATA CHECK         00954 47 01002 01900
00830          TFM   ERR+18,*-24,,   LOAD RETURN            00966 16 02040 -0942
00840          TFM   E1+6,ER8,,      LOAD OPERATION         00978 16 02448 -3109
00850          B     ERR,,,          BRCH TO ER ROUT        00990 49 02022 00000
00860          RN    S3,00702,,      RD SECTOR              01002 36 03994 00702
00870          BNI   K5,03600,,      ADDRESS CHECK          01014 47 01182 03600
00880          TFM   S3+8,020,9,     CHANGE SECTOR NO.      01026 16 04002 00-20
00890          RN    S3,00706,,      READ TRACK             01038 36 03994 00706
00900          SF    A3+1,,,         SET FLAG               01050 32 08036 00000
00910          MM    A3+3,05,10,     COMPUTE CYL            01062 13 08038 000-5
00920          TD    ER22+28,97,,    LOAD ER T/O            01074 25 03521 00097
00930          TD    ER22+30,98,,    LOAD ER T/O            01086 25 03523 00098
00940          CF    A3+1,,,         CLEAR FLAG             01098 33 08036 00000
00950          BC1   *+36,,,         SW 1 ON BYPASS         01110 46 01146 00100
00960          RCTY  ,,,             RET CARR               01122 34 00000 00102
00970          WATY  ER22,,,         TYPE ERROR             01134 39 03493 00100
00980          BNC3  *+24,,,         SW 3 ON HALT           01146 47 01170 00300
00990          H     ,,,             HALT                   01158 48 00000 00000
01000          B     K2,,,           TRY AGAIN              01170 49 00930 00000
01010*
01020*           LOAD TEST DATA INTO AREA A1
01030*
01040 K5       TFM   S3+8,001,9,     RESET SCTR CNT         01182 16 04002 00-01
01050          SF    TD,,,           SET FLAG               01194 32 03546 00000
01060          TFM   *+30,A1+100,,   INITIALIZE             01206 16 01236 -4131
01070          TFM   *+30,A1+1,,     INITIALIZE             01218 16 01248 -4032
01080          TF    99999,TD+99,,   LOAD DATA IN A1        01230 26 99999 03645
01090          CF    99999,,,        CLEAR FLAG             01242 33 99999 00000
01100          CM    *-18,A1+2000,,  SEE IF DONE            01254 14 01236 -6031
01110          BE    *+48,,,         BRCH IF DONE           01266 46 01314 01200
01120          AM    *-42,100,,      UPDATE                 01278 11 01236 -0100
01130          AM    *-42,100,,      UPDATE                 01290 11 01248 -0100
01140          B     *-72,,,         LOOP BACK              01302 49 01230 00000
01150*
01160*           RESET INDICATORS
```

```
01170*
01180          BNI   *+156,01900,,   ANY DATA CHECK          01314 47 01470 01900
01190          BNI   *+48,03900,,    ANY FILE                01326 47 01374 03900
01200          BI    *+12,03600,,    ADRS CK                 01338 46 01350 03600
01210          BI    *+12,03700,,    RL CK                   01350 46 01362 03700
01220          BI    *+12,03800,,    OVFO CK                 01362 46 01374 03800
01230          BI    *+12,00600,,    RD CK                   01374 46 01386 00600
01240          BI    *+12,00700,,    WR CK                   01386 46 01398 00700
01250          BI    *+12,01600,,    MBR-E CK                01398 46 01410 01600
01260          BI    *+12,01700,,    MBR-O CK                01410 46 01422 01700
01270          BI    *+12,00800,,    MAR CK                  01422 46 01434 00800
01280          BI    *+12,02100,,    TAS CK                  01434 46 01446 02100
01290          BI    *+12,02200,,    F R CK                  01446 46 01458 02200
01300          BI    *+12,02300,,    A O CK                  01458 46 01470 02300
01310*
01320*           WRITE TRACK OF TEST DATA
01330*
01340          TD    A2-1,GM,,       PUT IN GM               01470 25 06032 03962
01350          TD    A3-1,GM,,       PUT IN GM               01482 25 08034 03962
01360          TFM   S1+5,19400,,    LOAD SUB-INS.           01494 16 03971 J9400
01370          TFM   S2+5,19400,,    LOAD SUB-INST           01506 16 03985 J9400
01380          TFM   *+23,TD+1,,     LOAD NEXT INST          01518 16 01541 -3547
01390          TD    A1+1,99999,,    SET UP HD CNTR          01530 25 04032 99999
01400          AM    *-1,10,,        UPDATE                  01542 11 01541 -0010
01410 K6       WN    S1,00700,,      WR TK WITH RLC          01554 38 03966 00700
01420          BNI   *+48,01900,,    ANY DATA CHECK          01566 47 01614 01900
01430          TFM   ERR+18,*-24,,   LOAD RETURN             01578 16 02040 -1554
01440          TFM   E1+6,ER3,,      LOAD ERROR T/O          01590 16 02448 -2967
01450          B     ERR,,,          CK FOR ERROR            01602 49 02022 00000
01460*
01470*           READ BACK CHECK
01480*
01490          RN    S1,00701,,      RD BK CK RLC            01614 36 03966 00701
01500          BNI   *+48,01900,,    ANY DATA CHECK          01626 47 01674 01900
01510          TFM   ERR+18,*-24,,   LOAD RETURN             01638 16 02040 -1614
01520          TFM   E1+6,ER4,,      LOAD ERROR T/O          01650 16 02448 -2995
01530          B     ERR,,,          BRCH TO ERROR           01662 49 02022 00000
01540*
01550*           READ DATA INTO AREA A2
01560*
01570          RN    S2,00700,,      RD DISK RLC             01674 36 03980 00700
01580          BNI   *+48,01900,,    ANY DATA CHECK          01686 47 01734 01900
01590          TFM   ERR+18,*-24,,   LOAD RETURN             01698 16 02040 -1674
01600          TFM   E1+6,ER5,,      LOAD ERROR T/O          01710 16 02448 -3023
01610          B     ERR,,,          BRCH TO ERROR           01722 49 02022 00000
01620*
01630*           THIS ROUTINE DOES A PROGRAM
01640*           COMPARE OF DATA READ WITH
01650*           THE DATA THAT WAS WRITTEN
01660*
01670          SF    A1+1,,,         SET FLAG                01734 32 04032 00000
01680          SF    A2+1,,,         SET FLAG                01746 32 06034 00000
01690          C     A1+2000,A2+2000,,COMPARE DATA           01758 24 06031 08033
01700          CF    A1+1,,,         CLEAR FLAG              01770 33 04032 00000
01710          BE    *+48,,,         BRCH IF EQUAL           01782 46 01830 01200
01720          TFM   ERR+18,K6,,     LOAD RETURN             01794 16 02040 -1554
01730          TFM   E1+6,ER6,,      LOAD ERROR T/O          01806 16 02448 -3051
01740          BTM   ETO,ER7,,       BRCH LOAD ER T/O        01818 17 02358 -3079
```

```
01750          CM   S1+5,19580,,   COMPARE TO DONE      01830 14 03971 J9580
01760          BE   *+48,,,        BRCH IF              01842 46 01890 01200
01770          AM   S1+5,20,,      UPDATE               01854 11 03971 -0020
01780          AM   S2+5,20,,      UPDATE               01866 11 03985 -0020
01790          B    K6-24,,,       LOOP BACK            01878 49 01530 00000
01800*
01810*           TEST COMPLETE ROUTINES
01820*
01830          BC4  K2+12,,,       SW 4 ON LOOP BK      01890 46 00942 00400
01840          BNC1 *+48,,,        SW 1 OFF BYPASS      01902 47 01950 00100
01850          BNR  *+36,ERM,,     CK FOR RM IN MAP     01914 45 01950 03961
01860          RCTY ,,,            RETURN CARRIAGE      01926 34 00000 00102
01870          WATY ER30,,,        TYPE ER OCCURRED     01938 39 03405 00100
01880          RCTY ,,,            RETURN CARRIAGE      01950 34 00000 00102
01890          WATY T10,,,         TEST COMPLETED       01962 39 02763 00100
01900          RCTY ,,,            RETURNCARRIAGE       01974 34 00000 00102
01910          H    ,,,            HALT                 01986 48 00000 00000
01920          TFM  STA+6,STA+12,, LOAD RESTART         01998 16 00408 -0414
01930          B    STA,,,         RESTART TEST         02010 49 00402 00000
01940*
01950*           ERROR SUBROUTINE
01960*
01970 ERR      BI   *+24,01900,,   ANY DATA CHECK       02022 46 02046 01900
01980          B    99999,,,       RETURN TO PROG       02034 49 99999 00000
01990          BNI  J10,03900,,    ANY FILE CHECK       02046 47 02190 03900
02000          BNI  BYSL,03600,,   ADDRESS CHECK        02058 47 02130 03600
02010          CM   E1+6,ER8,,     WAS OP A SEEK        02070 14 02448 -3109
02020          BNE  *+36,,,        BRCH - NO            02082 47 02118 01200
02030          TFM  E1+1,41,10,    CHANG WATY TO NOP    02094 16 02443 000M1
02040          BTM  ETO,ER19,,     BRCH LOAD ER T/O     02106 17 02358 -3349
02050          BTM  ETO,ER10,,     BRCH LOAD ER T/O     02118 17 02358 -3121
02060 BYSL     BNI  *+24,03700,,   RECORD LENGTH CK     02130 47 02154 03700
02070          BTM  ETO,ER11,,     BRCH,LOAD ER T/O     02142 17 02358 -3149
02080          BNI  *+24,03800,,   OVERFLOW CHECK       02154 47 02178 03800
02090          BTM  ETO,ER12,,     BRCH,LOAD ER T/O     02166 17 02358 -3177
02100          BTM  ETO,ER13,,     BRCH,LOAD ER T/O     02178 17 02358 -3207
02110 J10      BNI  *+24,00600,,   READ CHECK           02190 47 02214 00600
02120          BTM  ETO,ER14,,     BRCH,LOAD ER T/O     02202 17 02358 -3245
02130          BNI  *+24,00700,,   WRITE CHECK          02214 47 02238 00700
02140          BTM  ETO,ER15,,     BRCH,LOAD ER T/O     02226 17 02358 -3271
02150          BNI  *+24,01600,,   MBR-E CHECK          02238 47 02262 01600
02160          BTM  ETO,ER16,,     BRCH,LOAD ER T/O     02250 17 02358 -3297
02170          BNI  *+24,01700,,   MBR-O CHECK          02262 47 02286 01700
02180          BTM  ETO,ER17,,     BRCH,LOAD ER T/O     02274 17 02358 -3323
02190          BI   *+12,0800,,    MAR CHECK            02286 46 02298 00800
02200          BI   *+12,02100,,   TAS CHECK            02298 46 02310 02100
02210          BI   *+12,02200,,   F R CHECK            02310 46 02322 02200
02220          BI   *+12,02300,,   A O CHECK            02322 46 02334 02300
02230          B    ERR,,,         LOOP BACK            02334 49 02022 00000
02240*
02250*           ERROR TYPE OUT ROUTINE
02260*
02270          NOP  ,,,            NO OPERATION         02346 41 00000 00000
02280 ETO      BC1  J11,,,         SW 1 ON BYPASS       02358 46 02478 00100
02290          MM   S1+5,05,10,    MULTIPLY             02370 13 03971 000-5
02300          TD   ER20+10,95,,   CYL. NUMBER          02382 25 03387 00095
02310          TD   ER20+12,96,,   CYL. NUMBER          02394 25 03389 00096
02320          TD   ER20+24,97,,   HD NUMBER            02406 25 03401 00097
```

```
02330          TF   E1+18,ETO-1,,   LOAD ER T/O              02418 26 02460 02357
02340          RCTY ,,,             RETURN CARRIAGE          02430 34 00000 00102
02350 E1       WATY 99999,,,        TYPE ERRCR               02442 39 99999 00100
02360          WATY 99999,,,        TYPE ERROR               02454 39 99999 00100
02370          WATY EP20,,,         TYPE ERROR               02466 39 03377 00100
02380 J11      TD   ERM,RM,,        PUT RM IN MAP            02478 25 03961 03957
02390          TR   00100,TAB,,     REPLACE MATH TAB         02490 31 00100 03646
02400          TFM  E1+1,39,10,     CHNG NOP TO WATY         02502 16 02443 000L9
02410          BNC3 *+24,,,         SW 3 ON HALT             02514 47 02538 00300
02420          H    ,,,             HALT                     02526 48 00000 00000
02430          B    ERR,,,          SEE IF MORE ERS          02538 49 02022 00000
02440*
02450*           DATA,TYPE OUTS,ERROR
02460*           MESSAGES AND CONSTANTS
02470*
02480 T1       DAC  28,DT 0021 - TEST DATA PROGRAM'          02551 00056
02490 T4       DAC  16,SWITCH SETTINGS'                      02607 00032
02500 T5       DAC  21,PROGRAM - AS DESIRED'                 02639 00042
02510 T6       DAC  11,DATA--PROG'                           02681 00022
02520 T7       DAC  25,KEY IN 1 DIGIT MODULE NUM             02703 00050
02530          DAC  05,BER '                                 02753 00010
02540 T10      DAC  15,TEST COMPLETED'                       02763 00030
02550 T20      DAC  24,DISK PACK ON 1311 IS NOT              02793 00048
02560          DAC  23, C E DISK PACK DONT USE               02841 00046
02570          DAC  10, PROGRAM.'                            02887 00020
02580 T30      DAC  22,SW 3 ON FOR CORRECTING                02907 00044
02590          DAC  08, KEY IN'                              02951 00016
02600*
02610*           ERROR MESSAGES
02620*
02630 ER3      DAC  14,WRITE 20 SCT '                        02967 00028
02640 ER4      DAC  14,READ BK COMP '                        02995 00028
02650 ER5      DAC  14,READ 20 SCTR '                        03023 00028
02660 ER6      DAC  14,PROG COMPARE '                        03051 00028
02670 ER7      DAC  15,DATA NOT EQUAL'                       03079 00030
02680 ER8      DAC  06,SEEK '                                03109 00012
02690 ER10     DAC  14, ADS CK (36) '                        03121 00028
02700 ER11     DAC  14, WLR CK (37) '                        03149 00028
02710 ER12     DAC  15, OVFO CK (38) '                       03177 00030
02720 ER13     DAC  19, FILE NO IND (39) '                   03207 00038
02730 ER14     DAC  13, RD CK (06) '                         03245 00026
02740 ER15     DAC  13, WR CK (07) '                         03271 00026
02750 ER16     DAC  13, MBR-E (16) '                         03297 00026
02760 ER17     DAC  13, MBR-O (17) '                         03323 00026
02770 ER19     DAC  14,SELECT LOCK  '                        03349 00028
02780 ER20     DAC  14, CYL 99  HD 9'                        03377 00028
02790 ER30     DAC  23,ERROR OCCURRED BUT SW 1               03405 00046
02800          DAC  21, WAS ON THUS NO ETO.'                 03451 00042
02810 ER22     DAC  27,ACCESS ARM AT 99 SHD BE 97'           03493 00054
02820*
02830*           DATA,CONSTANTS,WORKING
02840*           AREA AND SUB-INSTRUCTIONS
02850*
02860 TD       DSC  20,00000000001111111111                  03546 00020
02870          DSC  20,22222222223333333333                  03566 00020
02880          DSC  20,44444444445555555555                  03586 00020
02890          DSC  20,66666666667777777777                  03606 00020
02900          DSC  20,88888888889999999999                  03626 00020
```

```
02910 TAB     DSC  2,0                                          03646 00002
02920         DSB  100,3,,          MATH TABLES                 03747 00300
02930 N       DC   2,00,,           MODULE                      03949 00002
02940         DC   2,00,,           BUFFER                      03951 00002
02950 M       DC   2,00,,           MODULE NO.                  03953 00002
02960         DC   2,00,,           BUFFER                      03955 00002
02970 RM      DC   2,0',,           RECORD MARK                 03957 00002
02980 CEM     DC   2,00,,           C E MAP                     03959 00002
02990 ERM     DC   2,00,,           ERROR MAP                   03961 00002
03000 GM      DGM  ,,,              GROUP MARK                  03962 00001
03010         DAC  1,0                                          03965 00002
03020 S1      DSC  9,000000020,,    SUB-INST                    03966 00009
03030         DSA  A1+1                                         03979 00005 -4032
03040 S2      DSC  9,000000020,,    SUB-INST                    03980 00009
03050         DSA  A2+1                                         03993 00005 -6034
03060 S3      DSC  9,000000001,,    SUB-INST                    03994 00009
03070         DSA  A3+1                                         04007 00005 -8036
03080 CC      DC   5,06840,,        CK CYL                      04012 00005
03090         DC   5,07080,,        CK CYL                      04017 00005
03100         DC   5,07320,,        CK CYL                      04022 00005
03110         DC   5,19960,,        CK CYL                      04027 00005
03120         DAC  1,0                                          04029 00002
03130 A1      DC   2,00,,           LABEL                       04031 00002
03140         DSB  20,100,,         DATA AREA                   04051 02000
03150 A2      DC   2,00,,           LABEL                       06033 00002
03160         DSB  20,100,,         DATA AREA                   06053 02000
03170 A3      DC   2,00,,           LABEL                       08035 00002
03180         DSB  20,100,,         DATA AREA                   08055 02000
      MON     DS   ,18117                                       18117 00000
      MONIT   DS   ,18000                                       18000 00000
12345         DAC  04,DT21                                      10037 00008
12345         DSA  LAST                                         10048 00005 J0218
      DIPAL   BNR  DIPAL6       ,MON                            10050 45 10194 18117
              B    *+48                                         10062 49 10110 00000
12345         NOP  K2+12,,,                                     10074 41 00942 00000
12345         TDM  *-11,9,,                                     10086 15 10075 00009
              B    STA                                          10098 49 00402 00000
              TF   ERR-12*10+6,DIPAL1+6                         10110 26 01908 10140
              B    MONIT                                        10122 49 18000 00000
      DIPAL1  B    DIPAL2,,0                                    10134 M9 10146 00000
      DIPAL2  BNR  *+24,MON                                     10146 45 10170 18117
              B    MONIT                                        10158 49 18000 00000
              BNC1 ERR-12*6                                     10170 47 01950 00100
              B    ERR-12*9                                     10182 49 01914 00000
      DIPAL6  H                                                 10194 48 00000 00000
              B    STA                                          10206 49 00402 00000
12345 LAST    DC   01,0,,                                       10218 00001
07970         DEND DIPAL                                        10050
```

PN 2161819
EC 412549

```
3600320005002600035003932500011999992600054003873199999003202  Z  00000 00060 00000
26000780039325999990001149000002                                 Z  00060 00092 00001
000000000001020304000204060800030609021004080216100500Z0000Z   00100 00155000002
151020060218142007041128200806142230090817263000000000002      Z  00155 00210 00003
506070809001214161815181124272024282236352035304540363 2Z      Z  00210 00265 00004
484455324946536048465462754453627180123456789123456789 0Z      Z  00265 00320 00005
490041400000340000000102390255100100340000000102390290700100Z  00402 00462 00006
340000000102390260700100340000000102390263900100340000000102Z  00462 00522 00007
390268100100480000000000160040800558340000000102390270300100Z  00522 00582 00008
360394900100460058200300130394900002110009900001250395300099Z  00582 00642 00009
250396603953250398003953250399403953310364600100160399900000Z  00642 00702 00010
160090504012340399400701360399400702460079803600340000000102Z  00702 00762 00011
390279300100480000000000490040200000440084600797330079700000Z  00762 00822 00012
110399900020490072600000320079700000460087000600140399700J99Z  00822 00882 00013
460093001200260399999999110090500005490071400000160399 9J9400Z  00882 00942 00014
340399400701470100201900160204000942160244803109490202200000Z  00942 01002 00015
360399400702470118203600160400200020360399400706320803600000Z  01002 01062 00016
130803800005250352100097250352300098330803600000046011460010 0Z  01062 01122 00017
340000000102390349300100470117000300480000000000490093000000Z  01122 01182 00018
160400200001320354600000160123604131160124804032269999903645Z  01182 01242 00019
339999900000140123606031460131401200110123600100110124800100Z  01242 01302 00020
490123000000470147001900470137403900460135003600460136203700Z  01302 01362 00021
460137403800460138600600460139300700460141001600460142201700Z  01362 01422 00022
460143400800460144602100460145802200460147002300250603203962Z  01422 01482 00023
250803403962160397 1J9400160398 5J9400160154103547250403299999Z  01482 01542 00024
110154100010380396600700470161401900160204001554160244802967Z  01542 01602 00025
490202200000360396600701470167401900160204001614160244802995Z  01602 01662 00026
490202200000360398000700470173401900160204001674160244803023Z  01662 01722 00027
490202200000320403200000320603400000240603108033330403200000Z  01722 01782 00028
460183001200160204001554160244803051170235803079140397 1J9580Z  01782 01842 00029
460189001200110397100020110398500020490153000000460094200400Z  01842 01902 00030
470195000100450195003961340000000102390340500100340000000102Z  01902 01962 00031
390276300100340000000102480000000000160040800414490040200000Z  01962 02022 00032
460204601900499999900000470219003900470213003600140244803109Z  02022 02082 00033
470211801200160244300 0M11702358033491702358031214702154037 0Z  02082 02142 00034
170235803149470217803800170235803177170235803207470221400600Z  02142 02202 00035
170235803245470223800700170235803271470226201600170235803297Z  02202 02262 00036
470228601700170235803323460229800800460231002100460232202200Z  02262 02322 00037
460233402300490202200000410000000000460247800100130397100005Z  02322 02382 00038
250338700095250338900096250340100097260246002357340C000001 2Z  02382 02442 00039
399999900100399999900100390337700100250396103957310010003646Z  02442 02502 00040
1602443000L947025380030048000000000490202200000M46300707072Z  02502 02562 00041
710020006345626300444163410057595647594154 0Z                   Z  02562 02606 00042
026649634348006245636349554762 0Z                               Z  02606 02638 00043
N759564759415400200041620044456249594544 0Z                     Z  02638 02680 00044
M4416341202057595647 0Z                                          Z  02680 02702 00045
N24568004955007100444947496300545644645345005564 54M2455900 ZZ  02702 02762 00046
034562630043565457534563454 40Z                                 Z  02762 02792 00047
M44962520057414352005655007173717100496200555663004300450 644Z 02792 02852 00048
496252005741435200445655630064624500575956475941540 30Z        Z  02852 02906 00049
026600730056550046565900435659594543634955470052456800495502Z  02906 02966 00050
065949634500727000624363000Z                                    Z  02966 02994 00051
N945414400425200435654570 0Z                                    Z  02994 03022 00052
N9454144007270006243635900 0Z                                   Z  03022 03050 00053
N759564700435654574159450 0Z                                    Z  03050 03078 00054
M44163410055566300455864415 30Z                                 Z  03078 03108 00055
02454552000Z                                                    Z  03108 03120 00056
004144620043520024737604000Z                                    Z  03120 03148 00057
```

PN 2161819
EC 412549

```
06653590043520024737704000Z                                    Z  03148 03176 00058
00566546560043520024737804000Z                                 Z  03176 03206 00059
0046495345005556004955440024737904000Z                         Z  03206 03244 00060
59440043520024707604000Z                                       Z  03244 03270 00061
66590043520024707704000Z                                       Z  03270 03296 00062
0054425920450024717604000Z                                     Z  03296 03322 00063
0054425920560024717704000Z                                     Z  03322 03348 00064
4553454363005356435200000Z                                     Z  03348 03376 00065
4368530079790000484400790Z                                     Z  03376 03404 00066
M55959565900564343645959454400426463006266007100664162005655Z  03404 03464 00067
006348646200555600456356030Z                                   Z  03464 03492 00068
434345626200415954004163007979006248440042450079770Z          Z  03492 03546 00069
0000000011111111112222222222333333333344444444445555555555Z  03546 03606 00070
6666666666777777777788888888889999999999900Z                   Z  03606 03648 00071
000000000Z                                                     Z  03948 03958 00072
00(                                                            Z  03958 03963 00073
0000000020040320000000200603400000000108036068400708007320JZ  03964 04024 00074
9960P000Z                                                      Z  04024 04032 00075
00Z                                                            Z  06032 06034 00076
Z                                                              Z  08034 08036 00077
37271J0218Z                                                    Z  J0036 J0049 00078
4510194181174Z                                                 Z  J0050 J0063 00079
910110000004100942000001510075000094900402000002601908101404Z  J0063 J0123 00080
800000000M910146000004510170181174918000000004701950001004Z  J0123 J0183 00081
1914000004800000000004900402000000Z                            Z  J0183 J0219 00082
31003200035236000000005004900000Z234567890J34567890JK4567890JZ  00060 00348 00083
3100348000243600000000500KL567890JKLM67890JKLMN7890JKLMNO890JZ  00348 00384 00084
000000000049J0050000003100384000444900000ZKLMNOP90JKLMNOPQZ  00384 00401 00085
```