File No. 1410/7010-36
Form C28-0352-5

IBM Systems Reference Library

IBM 1410/7010 Operating System (1410-PR-155)

System Generation–1410-MI-965

System Generation provides the facilities for the creation and maintenance of a monitored system of IBM and user-supplied programs. The end product of System Generation is a System Operating File, including a System Monitor, that is tailored to provide an efficient Operating System for a specific machine environment.

This publication provides systems programmers and systems analysts with detailed information on the System Generation function. The publication describes the System Generation function, the programs used, and — primarily by means of examples — the procedures required for both tape-oriented and disk-oriented systems. Also included are machine requirements, core-storage requirements, and timing information for the elements of the IBM 1410/7010 Operating System. The use of customer options such as the History file and System Maintenance programs is also explained.

NOTE: The IBM 1302 Disk Storage Unit is now designated the IBM 2302 Disk Storage Unit; there has been no change in the unit itself, in the applications for which the unit may be used, or in the programming parameters used to specify those applications. The IBM 2302 Disk Storage Unit designation has been used in the text of this publication; programming parameters remain unchanged and refer to 1302.

MAJOR REVISION (October 1965)

This publication is a major revision of, and obsoletes, the publication *IBM 1410/7010 Operating System; System Generation,* Form C28-0352-4. The revision includes expanded discussions of Tele-processing System Requirements, Control Cards, Monitor Definitions, Symbolic Unit Definitions, and IOCS Definitions. Changes to the text are indicated by a vertical line at the left of the affected text.

Copies of this and other IBM publications can be obtained through IBM Branch Offices.
Address comments concerning the contents of this publication to:
IBM Corporation, Programming Systems Publications, Department 637, Neighborhood Road, Kingston, New York, 12401.

Contents

Introduction 5
Purpose of this Publication 5
Purpose of System Generation 5
Prerequisite and Related Literature 5
Prerequisite Literature 5
Related Literature 5
Minimum Machine Requirements 5
For the Tape-Oriented System 5
For the Disk-Oriented System 5
General Concepts 6
Definitions 6
Tape- and Disk-Oriented Systems 6

Operating System Machine Requirements 8
System Generation 8
Data Processing 8

Basic Concepts—Tape-Oriented System 10
How the System is Built 10
Functions to be Performed 10
Programs Required 10
Defining the System 10
Building an SGF 10
Construction of the File 10
Organization of the Control Deck for the SGF 11
Building an SOF 12
Organization of the File 12
Organization of the Control Deck for the SOF 12
Addition of a User-Written Program 13
Organization of SOF to be Updated 13
Organization of the Control Deck 13
General Maintenance Considerations 14
Check List for System Generation (Tape-Oriented) 14

Basic Concepts—Disk-Oriented System 16
How the System is Built 16
Functions to be Performed 16
Programs Required 16
Defining the System 16
Preparing to Build an SGF 16
Building an SGF 16
Construction of the File 17
Organization of the Control Deck for the SGF 17
Building an SOF 18
Organization of the File 19
Organization of the Control Deck for the SOF 19
Shared Disk Files 20
Four IOCS Generations 20
Permissible Combinations of Generations 20
Specifying Generation Desired 20
General Maintenance Considerations 21
Check List for System Generation (Disk-Oriented) 21

System Generation Considerations 23
Organization of Data Files on IBM 1301 or 2302 Disk Storage 23
Relocatable Libraries 24
Building a New Library as Part of a Tape SOF 24
Building a Library External to a Tape SOF 24
Disk Relocatable Library Considerations 25
Sort Definition Program 27
File Organization System 27
Requirements for System Description Control Cards 28
Relocation and Execution of the System Definition Program 28
Building Monitors with Tele-processing Capabilities 28
Random-Processing Scheduler 29
Macro Print and Punch Program 29
System Requirements 30
EXEQ Card 30
PRINT Card 30

Data Flow During System Generation Runs 32
Tape Layout 32
Over-all Data Flow—Tape System 32
Over-all Data Flow—Disk System 34

System Description Control Cards 36
SPOOL Definitions (SPLDF) 36
Physical Unit Definitions 37
Unit-Record Devices (GEN01) 37
Tape Units (GEN02) 37
Disk Areas (GEN03-GEN06) 38
1311 Disk (GEN07) 38
Monitor Definitions (GEN08) 39
Symbolic Unit Definitions 40
Reserve Units (GEN09) 40
Work Units (GEN10) 41
Tele-processing System Units (GEN11) 41
Tele-processing Directory Definitions (TPDIR) 41
Device Definitions for Resident IOCS (DEVDF) 41
IBM 1301/2302 Disk Definitions for Resident IOCS (DSKDF) 42
IOCS Definitions (IOKDF) 42
Random-Processing Disk Module Definitions (GENRM) 43

System Generation Control Cards 44
Monitor Control Cards 44
Linkage Loader Control Cards 44
SG Control Cards 45
Class I—The INCLD Card 45
Class II Control Cards—Macro Library 45
LOCAT Control Card (Class II) 45
INSER Control Card (Class II) 45
REPLC Control Card (Class II) 45
The DELET Control Card (Class II) 46
Class III Control Cards—Create Library 46
LOCAT Control Card (Class III) 46
INSER Control Card (Class III) 46
GENER Control Card (Class III) 46
REPLC Control Card (Class III) 46
DELET Control Card (Class III) 46
CREAT Control Card (Class III) 47
Class IV Control Cards—Relocatable Library 47
LOCAT Control Card (Class IV) 47
ALTLB Control Card (Class IV) 47
ADD Control Card (Class IV) 47
INSER Control Card (Class IV) 47
REPLC Control Card (Class IV) 48
DELET Control Card (Class IV) 48
Groups of Control Card Classes 48

IBM Master File—Tape-Oriented System 49
Assigned Symbols for Initial Run 49
Programs Available 49
Basic Resident Monitor 49

IBM Master File—Disk-Oriented System 50
Assignment Symbols for Initial Run 50
Programs Available 50
Basic Resident Monitor 51

Contents of the Libraries 52
Macro Library Contents 52
Relocatable Library Contents 52
Create Library Contents 55

Creation Charts 57
Use of Creation Charts 57
Linkage Loader 57
Monitor Modules in Relocatable Library 58
System Monitor 58
Restart Program 58
Monitor (for Tele-processing System) 59
Auxiliary Linkage Loader 59
COBOL 60
COBOL: Relocatable Library Modules for Object Programs 61
Autocoder 61
FORTRAN 62
FORTRAN: Relocatable Library Modules for Object Programs 62
Tape Sort Definition Program 63
Generalized Tape Sorting Program: Relocatable Library Modules 63
Disk Sort Definition Program 63
Generalized Sorting Program Using IBM 1301/2302 Disk Storage: Relocatable Library Modules 63
Utility Programs 63
SG1 Program 64
SG2 Program 64
SG3 Program 64
SG4 Program 64
SG5 Program 64
System Definition Program, File Organization System 64
Macro Print and Punch Program 64
Disk Library Loader 64
1311 Label Program 64
Master Tape Load Program 64
Complete Systems 64

Examples of System Generation for a Tape System 65
Example 1 65
Example 2 66
Example 3 67

Disk Load Programs 68
Disk Load Program 68
Program Description 68
Program Restrictions 68
Console Messages 69
Disk Library Loader (DSKLIBLDR) 69
Program Description 69
Setup Instruction and Use of Program 69
Console Messages 70

SG1 and SG2 Diagnostic Messages 71
Tape-Oriented System 71
Disk-Oriented System 72

System Maintenance 73
Modification Tape 73
The SG4 Program 74
Machine Requirements 74
Input Format 75
Messages 75
The SG5 Program 76
Machine Requirements 76
Control Cards 76
Control Card Sequence 78
Examples of Control Card Decks 78
Messages 78

Appendixes 81
A: Maintaining the History File with the SG3 Program 81
Program Input and Output Requirements 81
Machine Configuration Requirements 81
Control Cards 81
SG3 Execute Record 84
Trailer Label for History File 85
Heading for Listing Page 85
SG3 Diagnostic Messages 86
B: Operating System Core-Storage Requirements 87
Resident Monitor Requirements 87
Optional Resident Monitor Requirements for TP 88
Optional Resident Monitor Requirements for SPOOL 88
Basic Resident Monitor Requirements for 1311 Disk 88
Optional 1311 Label Routines 88
Nonresident Requirements 88
C: IOCS Timing Estimates 89

Index 90

Purpose of this Publication

This publication provides systems programmers and systems analysts with detailed information on the System Generation function provided for the 1410/7010 Operating System. The use of a History file (a customer option) is discussed, and maintenance of the file by use of the SG3 program is explained.

Purpose of System Generation

System Generation provides facilities for the generation and maintenance of the IBM 1410/7010 Operating System, adapted to both the computer and the data processing requirements of an installation.

System Generation is a function performed within and for the Operating System, using various Operating System programs, under Monitor control.

Prerequisite and Related Literature

Prerequisite Literature

For an understanding of the basic concepts of the Operating System, the reader is directed to:

IBM 1410/7010 Operating System; Basic Concepts, Form C28-0318.

For details on features, functions, and capabilities of the Operating System, the reader is directed to:

IBM 1410/7010 Operating System; System Monitor, Form C28-0319.

Related Literature

The following IBM 1410/7010 Operating System publications are not prerequisite in their entirety to the System Generation function, but are recommended reading for a general knowledge of the appropriate program or programming system to be generated and maintained.

Basic Input/Output Control System, Form C28-0322
Random-Processing Scheduler, Form C28-0323
Tele-processing Supervisor, Form C28-0321
Utility Programs, Form C28-0353
Generalized Tape Sorting Program, Form C28-0354
Autocoder, Form C28-0326
COBOL, Form C28-0327
FORTRAN, Form C28-0328
File Organization System for IBM 1301/2302 Disk Storage, Form C28-0405
Generalized Sorting Program Using IBM 1301/2302 Disk Storage, Form C28-0404
Support of IBM 1311 Disk Storage Drives, Form C28-0402

Operating instructions for the Operating System, including instructions for System Generation, are contained in:

Operator's Guide, Form C28-0351.

A knowledge of material contained in some of the above publications is required for System Generation. Specific reference to the pertinent information is made in this publication.

Minimum Machine Requirements

Two versions of the IBM Master file are provided: one for a tape-oriented installation, the other for a disk-oriented installation. Each is designed to enable the user to perform his *initial* System Generation (the creation of a System Generator file). The following machine requirements are the minimum configuration needed for System Generation. The Master file runs on the minimum machine configuration, as well as any configuration that exceeds the minimum. (Processing Overlap and Priority special features, which are standard with the IBM 7010, are required.)

For the Tape-Oriented System

40,000 positions of core storage
5 magnetic tape units
1 card reader (or an additional tape unit)

NOTE 1: A printer or an additional tape unit for the Standard Print Unit is recommended in addition to the above machine requirements.

NOTE 2: If 1311 Disk Storage is used for data files, 60,000 positions of core storage are required.

For the Disk-Oriented System

60,000 positions of core storage
1 module of IBM 1301 or 2302 Disk Storage
2 magnetic tape units
1 card reader (or one of the above tape units)

NOTE: It is recommended that a printer or additional tape unit for the Standard Print Unit be supplied in addition to the above machine requirements.

General Concepts

As distributed to the user, the Master file contains all the components of the 1410/7010 Operating System. From the Master file, the user generates a System Generator file (SGF). From the SGF, the user creates one or more System Operating Files (SOF) designed to perform specific data processing functions.

Definitions

Frequently used basic terms are defined below in relation to their use in this publication.

Monitor: The System Monitor without the Linkage Loader; that is, the combination of Bootstrap, Resident Monitor (including the Resident IOCS), and Transitional Monitor.

Operating Section: All operating programs in absolute format (ready to execute). Monitor is part of the operating section.

Library: An organized collection of subprograms or data to be used as input for System Generation. There are three types of libraries:

1. Relocatable Library: Compiled subprograms in relocatable format.
2. Macro Library: All the macro routines available to the Autocoder processor.
3. Create Library: Prewritten packets of Linkage Loader control cards used to conveniently process standard programs into absolute format.

Directory: A record, built during System Generation, that contains the names and relative locations of the items of an associated file.

Header: An identifying record at the beginning of every program phase or library.

Largest Possible Records: An option offered for tape-oriented System Generation (specifically, the SG2 program). If this option is exercised, a phase of a program will be written in records of as many characters as possible. The last record of the phase may be short to contain any remaining characters.

Macro Generation: An Autocoder function whereby symbolic statements are extracted from the Macro Library and become a portion of the subprogram being assembled.

Disk: Refers to IBM 1301 or 2302 Disk Storage.

Geometric Record Address: A disk record address whose four high-order digits are identical to the track number on which the record resides.

Simultaneous Peripheral Operations On Line (SPOOL): This programming feature allows card-to-tape, tape-to-card, and tape-to-print operations to be performed concurrently with batched program (see *System Monitor*).

Master File: An IBM-supplied source file consisting of:

1. A *minimum* Monitor capable of operating on any acceptable machine configuration;
2. A *basic* operating section capable of System Generation; and,
3. The Relocatable, Macro, and Create Libraries.

System Generator File (SGF): A system file consisting of:

1. A Monitor designed to operate efficiently in a particular installation environment;
2. An operating section capable of System Generation; and,
3. The library subprograms required for System Generation.

System Operating File (SOF): A system file consisting of:

1. A Monitor designed to operate efficiently in a particular installation environment;
2. An operating section designed to efficiently process the user's programs and data; and,
3. The library subprograms required for user processing.

The primary difference between the IBM Master file and an SGF is the Monitor. On the Master file, the Monitor is designed to operate in the minimum machine environment. To gain full advantage of the Operating System, the user constructs his Monitor to utilize the facilities of his installation, and also selects any IOCS or system function options (e.g., tape-label checking and unusual-end-of-program memory print) that would be useful to him. After an SGF is created, the Master file need not be used again, since the SGF effectively becomes the installation's "Master file."

The distinction between an SGF and an SOF is based entirely on operating efficiency. The primary difference between them is that the SGF *must* contain those elements required for System Generation, but an SOF need not contain them. An SGF is designed for System Generation; an SOF for production work.

Tape- and Disk-Oriented Systems

Orientation toward tape or disk is determined by the device (tape or disk) from which the Resident Monitor is loaded into core storage. Both systems are distributed by IBM as single reels of tape — the Master

file. The Master file for disk must be loaded onto disk storage before it can be used for System Generation. A tape-oriented Master file cannot be used for generation of a disk-oriented system; similarly, a disk-oriented Master file cannot be used for generation of a tape-oriented system.

Tape System

The operating programs on the Master file for tape are designed for tape usage. The user can, after the initial System Generation, design his system to use disk storage files within the tape system (e.g., a disk file can be used for data files).

Disk System

The operating programs on the Master file for disk are designed for disk usage. Two tape units are mandatory for System Generation. The Disk Load program is supplied in order to copy the system onto disk. The user can, after initial System Generation, design his programs to use tape files within the disk system (e.g., a tape file can be used for data files).

Operating System Machine Requirements

The Processing Overlap and Priority special features are required to use the 1410/7010 Operating System.

System Generation

The machine requirements for generation of the SGF from the Master file are described in the Introduction to this publication.

Data Processing

Unit-Record Requirements

All configurations of the Operating System require:

1 IBM 1402 Card Read Punch, Model 2, for use as the Standard Input Unit (SIU) and/or the Standard Punch Unit (SPU); or 1 IBM 1442 Card Reader, Model 3, for the SIU

1 IBM 1403 Printer, Model 2, for use as the Standard Print Unit (SPR)

NOTE 1: Tape units may be substituted for each of the functions of card reading, card punching, and printing.

NOTE 2: At the option of the user, punch and printer output may be intermixed on one tape unit for subsequent off-line punching and printing on an IBM 1401 Data Processing System. If the variable print and punch modules are selected, the Core Image file (MDM) and/or the Temporary Storage file (MDT) can also share this same tape unit.

NOTE 3: At the option of the user, the standard print and/or standard punch capability may be eliminated from the Resident Monitor. If no print unit is specified, (a) no diagnostic messages or memory map are provided by the Linkage Loader and (b) no compiler printed output is possible even though the compilers will operate. If no punch unit is specified, the compilers will operate, but no program cards will be produced.

Tape-Oriented Systems

In addition to the unit-record requirements, tape-oriented systems require:

1 tape unit for a System Operating File (SOF)

1 tape unit for a Job file (MJB)

1 tape unit for a System Library file if this file is not on the same reel of tape as the SOF

NOTE 1: If a Core Image file (MDM) is desired, an additional tape unit must be provided. This unit is not available for any other use unless the variable print and punch modules are selected. Selection of the variable print and punch modules allows the user to include the MDM on the same tape unit containing the SPR and SPU. The MDM may be used for dumping error records.

NOTE 2: The tape unit designated as the Job file is available as a work file if the program is loaded from the SOF.

Compiler Requirements: The three compilers (COBOL, FORTRAN, and Autocoder) share work files. The user may include any or all three compilers in his system.

In addition to the requirements listed for a tape-oriented system, the compilers require:

3 tape units used as work files for the Autocoder and COBOL compilers, but 2 tape units for the FORTRAN compiler

1 additional tape unit if the compile-and-go capability is used

NOTE: The tape designated as the Job file may be used as a work file during compilation.

1301 Disk-Oriented Systems

In addition to the unit-record requirements, 1301 disk-oriented systems require a series of contiguous cylinders formatted in the Load mode, one record per track, consisting of:

1. Six cylinders for basic programs on the SOF.
2. Additional cylinders to accommodate:
   COBOL—3 cylinders
   FORTRAN—2 cylinders
   Autocoder—7 cylinders
   Utilities and Sort Definition Program—1 cylinder
   Job file—Each cylinder can store approximately 60,000 positions of core storage; e.g., 6 cylinders are required for disk-oriented System Generation
   Working storage used by the compilers—No less than 2 cylinders per file and a greater number according to the size of the program being compiled (should not exceed 10 cylinders per file)
   User-supplied programs—Each cylinder can store approximately 60,000 positions of core storage.
3. Five additional cylinders if the compile-and-go capability is used. These five cylinders can accommodate approximately 4,400 subprogram card-image records that are the output from the compilers. (To increase this capacity, additional cylinders may be provided. Each additional cylinder can store approximately 880 card-image records.)
4. Cylinders to accommodate the System Library file of relocatable programs as follows:
   The IBMLIBR requires 40 cylinders containing, in part, 1 cylinder for COBOL subprograms and 4 cylinders for FORTRAN subprograms.
   Additional cylinders for user-supplied subprograms (each cylinder can store approximately 880 card-image records.)

NOTE: If a Core Image file (MDM) is desired, and the variable print and punch modules have not been selected, a tape unit must be provided for the MDM. This unit is not available for other use. However, if the variable print and punch modules *have* been specified, the MDM may share a tape unit with any combination of the following system files: Standard Print Unit, Standard Punch Unit, and Temporary Storage file (MDT).

2302 Disk-Oriented Systems

The differences between 1301 and 2302 disk-oriented systems are a result of the increased track capacity of the 2302 disk file. In addition to the unit record requirements, 2302 disk-oriented systems require a series of contiguous cylinders formatted in Load mode, two records per track. Each of these records forms a distinct symbolic file. While the 2302 requires the same number of cylinders as the 1301 for system residence, proper balancing of files in disk storage (e.g., assignment of the System Library file to the second record per track, etc.) can reduce by half the number of tracks required by the 2302 disk file.

Generalized Tape Sorting Program Requirements

In addition to the requirements listed for tape- and disk-oriented systems, the Generalized Tape Sorting program requires a minimum of three tape units. For a tape-oriented system, these may be the same units used as work files by the compilers. Additional tape units may be used to increase the program's efficiency. (See the publication, *Generalized Tape Sorting Program.*)

NOTE: The tape unit designated as the Job file for the tape-oriented system may be used as one of the four tape units for the sorting program, if the sorting program is loaded from the SOF.

Generalized Sorting Program Requirements

In addition to the requirements listed for a tape-oriented system, the Generalized Disk Sorting program requires 20,000 more positions of core storage and at least one module of IBM 1301/2302 Disk Storage.

There are no additional machine requirements for using the generalized disk sorting program with a disk-oriented system.

For both tape- and disk-oriented systems, optimum efficiency is provided by: (1) use of two modules of IBM 1301 Disk Storage; or (2) use of one module of IBM 2302 Disk Storage in which each access arm services a different work area.

Requirements for File Organization System (FOS)

An executable File Organization System requires the following minimum machine configuration:

60,000 positions of core storage.

One module of IBM 1301 or IBM 2302 Disk Storage.

One magnetic tape unit (additional units are desirable).

An IBM 1402 Card Read-Punch and an IBM 1403 Printer; or one or two magnetic tape units for the corresponding input/output functions.

Tele-processing System Requirements

Tape-Oriented Tele-processing Supervisor: 1 tape unit for storage of the TP Library file.

1301 Disk-Oriented Tele-processing Supervisor: 1 cylinder of disk storage, formatted in the Load mode, for storage of the Tele-processing Supervisor.

If Tele-processing and batch processing occur concurrently, a tape-oriented system will require 60,000 positions of core storage and a disk-oriented system will require 80,000 positions. Each system requires 20,000 more positions of core storage than the minimum machine configuration needed for System Generation.

Additional cylinders of disk storage, formatted in the Load mode, for storage of TP programs. The effective capacity of each cylinder is dependent upon the format used (i.e., relocatable or absolute) and the average size of the TP programs.

To unload and reload the main-line program, the user must provide a tape unit or disk area for the Temporary Storage file (MDT). If the MDT is to be on tape, and the variable print and punch modules *have* been selected, the MDT may share the tape unit with any combination of the following system files: Standard Print Unit, Standard Punch Unit, and Core Image file.

Requirements for Systems Including the SPOOL Feature

Use of the SPOOL (Simultaneous Peripheral Operations On Line) feature, which enables the user to perform such operations as card-to-tape and tape-to-card on line concurrently with regular processing, requires that the system contain a minimum of 60,000 positions of core storage. In addition, the Unit Record Priority Interrupt feature on the channel(s) used for SPOOL must also be included. Other Operating System requirements are the same as those described above for the user's particular configuration.

Requirements for the Execution of Object Programs

The machine requirements for the execution of object programs produced by the three compilers (COBOL, FORTRAN, and Autocoder) vary according to the nature of the program. COBOL and FORTRAN programs can refer to magnetic tape units and unit-record equipment. Autocoder programs can refer to disk storage and Tele-processing units as well as to magnetic tape units and unit-record equipment.

This section applies only to a tape-oriented system and need not be read by persons interested only in a disk-oriented system.

How the System is Built

Functions to be Performed

The Master file contains an operating section capable of building an SGF. The SGF incorporates those options desired by the user. To build the SGF, several programs from the operating section, which are in absolute format, are executed. These programs perform the following functions:

1. Accept input data that describes the environment under which the new system is to operate, and incorporate the optional items defined by each user.
2. Preserve, for later use, any or all of the library elements supplied on the Master file.
3. Build the absolute programs that the user specifies.
4. Place these absolute programs on the output file. At the time this operation is being performed, the library material preserved in step 2 can be merged onto the output file. At the same time, directories are merged onto the output file.

Programs Required

To perform the above functions, the following four programs are executed:

AUTOCODER: The user describes the machine configuration and selects the various options from those available in the form of Autocoder source statements. Autocoder processes this input by means of macro routines and generates the nucleus of the new Monitor.

SG1: This program performs two main functions.

1. SG1 locates and copies the library material that the user desires to include in the new system.
2. SG1 prepares a tape that contains input *control* information for the Linkage Loader (LINKLOAD program.)

LINKLOAD: This program performs its standard function of converting relocatable routines into absolute format. It reads control information from the work tape produced by SG1. The *relocatable input* that it processes comes from:

1. The output of the Autocoder run; and
2. The Relocatable Library supplied on the Master file. The output, in absolute form, is placed onto the Job file, MJB.

SG2: This program produces the directories required and merges the programs, directories, and libraries into the new file.

Defining the System

Each user must define, through control cards, the Operating System that he desires. A detailed description of the control cards is presented in "System Description Control Cards" and "System Generation Control Cards." Briefly, the user specifies the following:

1. The number and types of input/output devices. A two-character assignment symbol is specified by the user to be used in all references to each device.
2. The variable and optional features desired within the Resident Monitor.
3. The number and types of symbolic units required.
4. The variable and optional features desired within the Resident IOCS.

Building an SGF

This operation is the first step in System Generation. This section describes the steps leading to this initial SGF run.

The user must give careful consideration to the various options available within the system. By choosing those options best suited to his needs, in addition to being aware of his installation's machine configuration, the user can prepare the control cards described in the section, "Organization of the Control Deck for the SGF."

Construction of the File

Each user must analyze his requirements for programs supplied to him on the Master file. The operating section of the Master file consists of the programs required to do the initial run, Master to SGF. The operat-

ing section is used in conjunction with the Relocatable, Macro, and Create Libraries to construct the SGF.

A user may choose to utilize one of the Create Library packets that will generate a "standard set" of programs on the SGF. These programs are those that a typical user might require.

If a specified requirement must be met which is not covered by a Create Library packet, the user must provide the appropriate Linkage Loader control cards. The packet, or the use of individual create capabilities, determines the ultimate sequence of programs on the SGF.

Organization of the Control Deck for the SGF

The control deck for this operation is composed of the following sections:

1. Initialization, including the DATE card. The Monitor places the date from this card in a Resident Monitor field called /DAT/.
2. JOB.
3. ASGN cards assign symbolic unit entries to physical input/output devices.
4. MODE card describes the program operation wanted for the job.
5. EXEQ AUTOCODER card causes the Monitor to locate and load the Autocoder processor. The card is followed by Autocoder source statements. These are macro statements that define the system.
6. EXEQ SG1 card causes the system to locate and load SG1. The cards which follow this EXEQ card are divided into two categories. SG control cards, Classes II, III, and IV, instruct SG1 to locate and copy libraries. CREAT control cards direct SG1 to build a work file for the Linkage Loader.

NOTE: CREAT control cards may be interspersed with (or replaced by) Linkage Loader control cards.

7. EXEQ LINKLOAD card causes the Linkage Loader to be located and loaded. The Linkage Loader is directed to obtain its control information from the file just created by SG1. Output is placed on the Job file.
8. EXEQ SG2 card causes SG2 to be located and loaded. The SG2 program has no control input. It can only be executed following one or more of the above programs that have prepared input data on predetermined symbolic units.
9. END.

Additional information is given in the publication *System Monitor.*

Example 1

Figure 1 illustrates the control cards needed to build a typical SGF.

```
6        16   21
MON$$     DATE YRDAY
MON$$     JOB  GENERATE TAPE ORIENTED SGF
MON$$     ASGN MW1,B4
MON$$     ASGN MW2,A5
MON$$     ASGN MW3,B5
MON$$     ASGN MJB,A1
MON$$     ASGN MR0,A3
MON$$     ASGN MGO,B2
MON$$     MODE GO,SG
MON$$     EXEQ AUTOCODER,,,NOFLG,NOPCH
          HEADRGENERATE SGF
          GEN01P1,R1,X1
          GEN02/MDM/,1,A0,A1,A2,A3,A4,A5,A6,A7,A8,A9
          GEN02/MDM/,2,B0,B1,B2,B3,B4,B5,B6,B7,B8,B9
          GEN0817000901l9,,55,5,099,A0,R1,,,P1,X1,,,B6,SNAP
          GEN0910
          GEN1010,A4,B4,A5,B5,A6
          GEN11
          DEVDF1,729,1402,1403
          DEVDF2,7330
          IOKDF1410,,A,4,5,,,,,70000
          END
MON$$     EXEQ SG1                                          7
          LOCATC,CREATLIB
          INSERC
          LOCATR,IBMLIBR
          INSERR
          LOCATM,AUTOCODER
          INSERM
          END
          CREATTSYSTEM
          END
MON$$     EXEQ LINKLOAD
          INPUTMW2
MON$$     EXEQ SG2                                         L7
MON$$     END
```

Figure 1. Control Cards Required for a Typical SGF for a Tape-Oriented System

The sample deck begins with the initialization information. This is followed by the JOB card. ASGN cards assign symbolic units to specific input/output devices through their assignment symbols.

The MODE card indicates that the output from any compiler is to be written on the Go file, MGO. This same card indicates that the operations that follow are to be executed in SG mode. This sets internal indicators that are tested by dependent programs and condition or alter their mode of operation.

The EXEQ Autocoder card contains the fourth operand (NOFLG) and the fifth operand (NOPCH.) The NOFLG operand is a signal to Autocoder that the source statements that follow will knowingly violate the rules governing use of index registers, hence flags that would normally be a diagnostic warning should be suppressed. The NOPCH parameter suppresses the punch output from this compilation.

The first source card to Autocoder is a HEADR card, which serves to identify the run.

By comparing the sample cards with the detailed description of the input control cards given later in this publication, the input to Autocoder can be seen to indicate the following:

Unit record equipment will be available on channel 1. The Core Image file will always be available on the new system.
Magnetic tape units will be available on two channels, ten tape units per channel.
The system will be a 1410 Data Processing System.
Core-storage size will be 80,000 positions.
The system will be tape oriented.
The system files will contain no tape labels.
There will be no Tele-processing devices.
The Core Image file (MDM) will be available.
The POW program will not be included.

The Standard Print Unit will be a 1403 Printer.
The Standard Punch Unit will be a unit-record punch.
An Alternate Input Unit (AIU) will be included.
The number of lines per page will be 55.
The size of the console inquiry message area will consist of five core-storage positions.
JOB cards will not be punched.
All Monitor control cards will be typed and printed.
The new system tape normally will be mounted on a tape unit whose assignment symbol is A0.
The SIU will refer to R1.
The SPR will refer to P1.
The SPU will refer to X1.
The Core Image file (MDM) will refer to B6.
The Resident Monitor will include the Snapshot utility routine.
Ten reserve units will be established.
Ten work units will be established.
The IOCS will provide routines for unit-record equipment and 729 tape units on channel 1.
The IOCS will provide routines for 7330 (and 729) tape units on channel 2.
The IOCS will have routines to check 120-character tape labels (no exits provided.)
Error statistics are to be accumulated.
User-written service routines will be provided for.
The third record written on the Core Image file (MDM) will be written from location 70000.
The last source statement to Autocoder is the END card.

The EXEQ SG1 card contains a 7 in column 59 to indicate the actual machine size.

The control cards that follow the EXEQ SG1 card request SG1 to copy the Create Library (CREATLIB), the Relocatable Library (IBMLIBR), and the Macro Library (which is a part of Autocoder.) These requests are terminated by the first END card.

The second section of SG1 control cards begins with the CREAT TSYSTEM card. This card requests SG1 to locate the Create package specified and to produce control information for the Linkage Loader (LINKLOAD). The control information will be in the form of Linkage Loader control cards (e.g., PHASE, CALL, CALLN).

This section is also terminated with an END card.

The EXEQ LINKLOAD card is followed by the INPUT MW2 card. The INPUT card directs LINKLOAD to obtain its control information from the tape file MW2 prepared by SG1.

The EXEQ SG2 card contains additional control punches:

COLUMN	CONTENTS	
58	L	Any character in this column indicates that the output should be constructed with "largest possible records."
59	7	Character indicates the actual machine size.

SG2 now merges the information processed above onto the new SGF. The sequence of the SGF is determined by the sequence of information on the Job file, MJB.

SG2 also processes requests contained on the Job file for directories and libraries.

The final output, the SGF, appears on tape file MW2.

Building an SOF

This function is essentially a copy operation. Each item to be copied must be specifically requested. Any item(s) not specifically requested will not appear on the output file.

Organization of the File

In Example 1, the programs required for the SOF run were converted into absolute format records. Hence, for this example, the most efficient way to produce the SOF is to request that this file be constructed in the same sequence as the SGF. However, it is possible to resequence any or all of the operating section programs to produce a system that is most efficient from an operating viewpoint. In any case, the following programs *must* appear first on the SOF in the following order listed:

IBBOOT
IBRESMON
IBTRANSIT

Organization of the Control Deck for the SOF

The control deck for this operation is composed of the following sections:

1. Initialization, including the DATE card.
2. JOB.
3. ASGN cards.
4. EXEQ SG1. SG1 control cards, Classes II, III, and IV, direct SG1 to locate and copy libraries. SG1 control cards, Class I, give the names of the specific items to be copied. Note that the sequence of these requests determines the sequence of the new file.
5. EXEQ SG2. This card causes SG2 to build the final output tape.
6. END.

Example 2

Figure 2 illustrates the control cards needed to build a typical SOF. There is no card in the figure to declare mode SG; the SG mode is required only if the Linkage Loader is executed during system generation functions.

The sample deck begins with standard initialization information, a JOB card, and ASGN cards.

The EXEQ SG1 card used for this run does not require machine size indication in column 59; it is assumed that the SGF reflects the actual machine size.

The EXEQ card is followed by requests to locate and copy the desired libraries. This section of control cards terminates with an END card.

The next group of control cards contains specific requests to copy individual items from the input file. These requests determine the sequence of the final

```
MON$$     DATE YYDDD
MON$$     JOB  COPY SOF WITH MULTIPLE TRANSITIONAL MONITORS
MON$$     ASGN MW1,B1
MON$$     ASGN MW2,B2
MON$$     ASGN MJB,A1
MON$$     ASGN MRO,A3
MON$$     EXEQ SG1
          LOCATR,IBMLIBR
          INSERR
          LOCATC,CREATLIB
          INSERC
          LOCATM,AUTOCODER
          INSERM
          END
          INCLDIBBOOT
          INCLDIBRESMON
          INCLDIBTRANSIT
          INCLDAUTOCODER
          INCLDIBTRANSIT
          INCLDLINKLOAD
          INCLDIBMLIBR
          INCLDIBTRANSIT
          INCLDUTILITIES
          INCLDSG1
          INCLDCREATLIB
          INCLDSG2
          INCLDIBTRANSIT
          INCLDFORTRAN
          INCLDIBTRANSIT
          INCLDSORTDEFINE
          INCLDIBTRANSIT
          END
MON$$     EXEQ SG2
MON$$     END
```

Figure 2. Control Cards Required for a Typical SOF for a Tape-Oriented System

output file (SOF). Contained in this group are specific requests to include (INCLD) the IBMLIBR and the CREATLIB. These cards are required to establish the relative location of these items. SG1 will prepare a request (for SG2) to show the location desired. Note that several copies of IBTRANSIT have been requested. The group of control cards also terminates with an END card.

The EXEQ SG2 card causes SG2 to build the final output tape. The functions performed by this program are the same as those outlined in Example 1.

Addition of a User-Written Program

An operation that is frequently carried out is the addition of a user-written program to the operating section of an SOF. This function, like the previous illustrations, involves the building of a new system tape.

Organization of SOF to be Updated

To accomplish the updating of a system, the full capabilities of SG1 can be employed. Therefore, the user may choose to resequence the operating section of the new SOF. The only restriction on sequencing is that IBBOOT, IBRESMON, and IBTRANSIT must be the first items on the output file.

Organization of the Control Deck

Control cards follow the pattern established in Example 2 when adding additional programs to the SOF. However, additional cards are required to:

1. Establish MODE SG; and
2. Add the additional program, and resume the normal SG1 functions.

The sequence of the final output is determined from the sequence of the Job file. Because of this, the location of the additional cards is important.

The first EXEQ SG1 card begins requests that preserve the library elements that are to be retained. This section terminates with an END card.

The INCLD cards direct SG1 to build a Job file in the sequence specified. At the point where the new program(s) are to be inserted, SG1 functions are terminated (temporarily) by an END card.

The card EXEQ LINKLOAD, followed by the necessary control information and input deck(s), build the new program(s) onto the Job file.

At the completion of LINKLOAD, the EXEQ SG1 card appears again to cause the resumption of normal processing. This causes the remaining programs to be placed on the Job file.

Example 3

Figure 3 illustrates the addition of a user-written program to the operating section of an SOF.

The sample deck begins with the DATE, JOB, and ASGN cards.

The MODE SG card establishes the mode for the programs that follow. This alters the normal operation of LINKLOAD so as to cause it to record information on a work file for SG2.

EXEQ SG1 is followed by requests to preserve library material. This section terminates with an END card.

The next cards are SG1 Class I requests to copy programs from the operating section on the Job file. This section is also terminated with an END card.

The EXEQ LINKLOAD card is followed by Linkage Loader control and input cards. In this example, the user's program has been previously compiled, and the relocatable deck from the compilation is placed immediately after the PHASE card. The user-written program resides on the LIB or Go file as well as on the SIU.

The EXEQ SG1 card is required only if it is necessary to resume the SG1 function. In this example, SG1 is required because the new program to be inserted was *not* to be at the end of the Job file.

Additional SG1 Class I cards follow, specifying the programs to be copied onto the Job file. This section terminates with an END card.

NOTE: At this point, the Job file is in the sequence desired for the output file.

The EXEQ SG2 card causes SG2 to build the new tape in the same sequence as the Job file. At this time, library information and directories are merged onto the new tape wherever they have been requested.

```
MON$$     DATE YYDDD
MON$$     JOB  UPDATE DECK
MON$$     ASGN MJB,A1
MON$$     ASGN MR0,A3
MON$$     ASGN MW1,B4
MON$$     ASGN MW2,A5
MON$$     MODE SG
MON$$     EXEQ SG1
          LOCATR,IBMLIBR
          INSERR
          LOCATM,AUTOCODER
          INSERM
          END
          INCLDIBBOOT
          INCLDIBRESMON
          INCLDIBTRANSIT
          INCLDAUTOCODER
          INCLDLINKLOAD
          INCLDIBMLIBR
          END
MON$$     EXEQ LINKLOAD
          PHASEUSERPROG
**********RELOCATABLE DECK**********
MON$$     EXEQ SG1
          INCLDSORTDEFINE
          INCLDIBTRANSIT
          END
MON$$     EXEQ SG2
MON$$     END
```

Figure 3. Control Cards Required to Add a User-Written Program to the SOF of a Tape-Oriented System

General Maintenance Considerations

Maintenance of the operating system covers many possible variations. Listed below are some of the important aspects:

Change to Monitor: Requires complete regeneration of the SGF, SOF, all Job files that have been saved, and all TP Library files.

Change to a Dependent Program in the Operating Section: Requires recompilation of affected modules, copying (INCLD) any unaffected programs, and regeneration of affected programs.

Change to Library (other than Monitor library elements): Requires updating of library, plus regeneration of any programs in the operating sections which were affected. As in item 2, any unaffected programs can be copied by use of the INCLD card. By careful planning, the user should be able to make changes to an existing relocatable library and also incorporate those changes into a new operating section as part of one job. For this type of operation, the reader should review the control card descriptions concerning the operation of the Go file during maintenance of the Relocatable Library. Refer to Class IV control cards INSER and REPLC, under "System Generation Control Cards."

Instead of the above method, the SG4 and SG5 programs can be used to update the libraries as described in the section "System Maintenance." Each time the library modules are to be updated, IBM supplies a tape containing the changes to be made. This tape is used with the SG5 program to prepare an input tape for updating the libraries. If the user must make his own changes to IBM program modules, he can use the SG4 program for making the changes to the modules and for maintaining the modules.

A careful study of the control card descriptions is required to utilize the maintenance capabilities efficiently.

Check List for System Generation (Tape-Oriented)

1. The programs in System Generation use the last (highest) core-storage position as a starting point from which certain elements are built.
2. The absolute records size option (EXEQ SG2 card) for systems that include Tele-processing devices should not specify largest possible records.
3. The Sort Definition program should be generated by the initial generation if sort or merge programs are desired on an SOF.
4. Multiple copies of the Transitional Monitor should be placed on the SOF to minimize the search time required for this element during operation. The Resident Monitor always makes a forward search for the Transitional Monitor. Multiple copies of any program can be placed on the SOF to minimize search time. If multiple copies are included, they must be identical. For example, if one copy of Linkage Loader includes COUPLE, all copies must include COUPLE. Also, the user can create multiple copies of Transitional Monitor in the same run that Resident Monitor is generated. This is done by inserting CREATTRANSIT cards at the desired insertion points.
5. The user can modify the Macro Library and the Create Library, but cannot create additional libraries with records of the same format as these libraries. A Relocatable Library can also be modified and the user can create as many relocatable libraries as desired, with the one restriction that only one of these can be named IBMLIBR (or any other name.) IBMLIBR is the name used by the Linkage Loader to find the System Library file if the user does not specify a different one. For relocatable libraries on separate reels, any name, including IBMLIBR, can be assigned.
6. COBOL and Autocoder use symbolic units MW1, MW2, and MW3 for work files during compilation; FORTRAN uses MW1 and MW2. MW1 and MW3 should be assigned to a different channel from MW2 for balanced and efficient usage. One additional tape unit is required if the compile-and-go capability is used.
7. The Create Library must be named CREATLIB.
8. If the COBOL "ENTER" verb is used in conjunction

with FORTRAN subprograms, the relocatable modules required to run with COBOL and FORTRAN object programs must be in the *same* Relocatable Library.

9. Every system must have the Bootstrap, the Resident Monitor, and the Transitional Monitor (in that order) at the beginning of the tape.

10. The maximum number of items that may appear on an SOF is 154. An item is defined as a program or a library. (Examples: COBOL is one item and IBMLIBR is one item.)

11. Table 1 indicates the ASGN cards that are required during System Generation.

12. The Generalized Tape Sorting program requires a minimum of four tape units (including the SOF). These may be the same tape units as those used as work files by compilers. Additional tape units increase the program's efficiency. See the publication *Generalized Tape Sorting Program.*

13. The Generalized Disk Sorting Program requires two disk work areas, preferably on separate modules. Any tape units used must be in addition to the basic requirements for the system. See the publication *Generalized Sorting Program Using IBM 1301/2302 Disk Storage.*

14. Programs that require the Autocoder "No-Clear" option for DA statements must *not* be placed on the SOF.

Table 1. Tape System Input/Output Requirements

Physical Unit		1	2	3	4	5 *	6	7 *	8	9
Symbolic Unit		SOF	SIU	MW1	MW2	MW3	MJB	MGO	MR0	SPR
Program used in System Generation	Autocoder	Required	Required	Work File	Work File	Work File		Output		Optional
	SG1			Library Directory Work File	Linkage Loader Input File		Output	From Autocoder		
	SORT-DEFINE				Linkage Loader Input File			Not Used		
	LINKLOAD			Library Directory Work File	Linkage Loader Input File		Output	From Autocoder		
	SG2			Library Directory Work File	New SOF (Final Output File)		Input		Directory Work File	

* For the minimum configuration, MW3 and MJB, and MGO and MR0 share the same physical units.

This section applies only to a disk-oriented system and need not be read by persons interested only in a tape-oriented system.

How the System is Built

Functions to be Performed

The Master file contains a bootstrap disk load program that loads the Master file on the disk in preparation for System Generation. The absolute portion that is loaded on the disk is capable of building an SGF. The SGF incorporates those options desired by the user. To build the SGF, several programs from the operating section, which are in absolute format, are executed. These programs perform the following functions:

1. Accept input data that describes the environment within which the new system is to operate, and incorporate the optional items defined by each user.
2. Build absolute programs that the user specifies.
3. Place these absolute programs on the output file.
4. Place the library elements on the output file.

Programs Required

To perform the above functions, the following four programs are executed:

AUTOCODER: The user describes the machine configuration and the various options available in the form of Autocoder source statements. Autocoder processes this input by means of macro routines and generates the nucleus of the new system.

SG1: This program performs one function. It prepares a tape which contains input *control* information for the Linkage Loader (LINKLOAD program).

LINKLOAD: This program performs its standard function of converting relocatable routines into absolute format. It reads control information from the work tape produced by SG1 and/or control cards from the SIU. The *relocatable input* that it processes comes from:

1. The output of the Autocoder run (item 1 above); and
2. The Relocatable Library supplied on the Master file. (This library must have been loaded onto the disk.)

The output, in absolute form, is placed onto the Job file, MJB.

SG2: This program locates and copies the library elements that the user desires in the new system. Its output is a new tape that is capable of being loaded onto the disk. This tape contains all items generated.

Defining the System

The user must describe the Operating System that he desires through control cards. A detailed description of the control cards appears in "System Description Control Cards" and "System Generation Control Cards."

Briefly, the user supplies the following:

1. The number and types of input/output devices. A two-character assignment symbol is specified by the user to be used in all references to each device.
2. The variable and optional features desired within the Resident Monitor.
3. The number and types of symbolic unit entries required.
4. The variable and optional features desired within the Resident IOCS.

Preparing to Build an SGF

Before building an SGF or SOF, it is necessary for the user to load the Master file or the source SGF onto disk storage. Instructions for performing this transfer to disk storage are given in "Disk Load Program."

After the Master file is loaded onto the disk, it is necessary to format the disk areas required for the files (MJB, MGO, MW1, MW2, and MW3) used during System Generation. This is accomplished by using the 1301 or 2302 Format/Address Generator utility programs. See the publication *IBM 1410/7010 Operating System; Utility Programs*, Form C28-0353, for instructions in the use of these programs.

Building an SGF

This operation is the first step in System Generation. This section describes the steps leading to this initial SGF run.

The user must give careful consideration to the various options available within the system. By choosing those options best suited to his needs, besides being aware of his installation's machine configuration, the user can prepare the control cards discussed in the section, "Organization of the Control Deck for the SGF."

Construction of the File

Each user must analyze his requirements for programs supplied to him on the Master file. The operating section of the Master file consists of the programs required to do the initial run, Master to SGF. The operating section is used in conjunction with the Relocatable, Macro, and Create Libraries to construct the SGF.

A user may choose to utilize one of the Create Library packets that will generate a "standard set" of programs on the SGF. These programs are those that a typical user might require.

If a specific requirement must be met which is not covered by a Create Library packet, the user must provide the appropriate Linkage Loader control cards.

Organization of the Control Deck for the SGF

The control deck for this operation is composed of the following sections:

1. Initialization, including BOOT1 card and the DATE card. The Monitor places the date from the DATE card in a Resident Monitor field called /DAT/. Figure 4 shows a 1410 bootstrap card for channel 2.
2. JOB.
3. ASGN cards assign symbolic unit entries to physical input/output devices.
4. MODE card describes the program operation wanted for the job.
5. EXEQ AUTOCODER card causes Monitor to locate and load Autocoder. The card is followed by Autocoder source statements. These cards define the system.
6. EXEQ SG1 card causes the system to locate and load SG1. The cards that follow this EXEQ card must be Class III SG control cards. CREAT control cards direct SG1 to create a work file for the Linkage Loader.

NOTE: SG control cards, Class III, may be interspersed with (or replaced by) Linkage Loader control cards.

7. EXEQ LINKLOAD card causes the Linkage Loader to be located and loaded. The Linkage Loader is directed to obtain its control information from the file just created by SG1.
8. EXEQ SG2 card causes SG2 to be located and loaded. The cards that follow this EXEQ card are divided into two distinct groups. The first group consists of Class I SG control cards only. The Class I control cards direct SG2 to locate the named elements and to copy them onto the new output file.

The second group is made up of Class II, III, and IV control cards. (Class IV control cards must be last.) This group directs SG2 to perform some operations on the libraries and to copy those libraries onto the new output file after the operations requested are complete.

9. END.

Additional information is given in the publication *System Monitor.*

The newly created output file is a tape. To use this new system it is necessary to load this tape onto disk. See "Disk Load Program" for instructions.

Example 1

Figure 4 illustrates the control cards needed to build a typical SGF.

The sample deck begins with the normal initialization information. The first card contains the bootstrap that loads the first record of the system into core storage. This is followed by the JOB card. ASGN cards assign symbolic units to specific input/output devices through their assignment symbols.

The MODE card indicates that the output from any compiler is to be written on the Go file, MGO. This same card indicates that the operations that follow are to be executed in SG mode. This sets internal indicators which are tested by dependent programs and which condition or alter their mode of operation.

The EXEQ AUTOCODER card contains the fourth operand (NOFLG) and the fifth operand (NOPCH). The NOFLG operand is a signal to Autocoder that the source statements that follow will knowingly violate the rules governing use of index registers; hence flags that would normally be a diagnostic warning should be suppressed. The NOPCH parameter will suppress the punch output from this compilation.

The first source card to Autocoder is a HEADR card, which serves to identify the run.

By comparing the sample cards with the detailed descriptions of the control cards that appear later in this publication, the input to Autocoder will be seen to indicate the following:

Unit record equipment will be available on channel 1.
Magnetic tape units will be available on two channels, two tapes per channel.
Nine disk files are defined on both channel 1 and channel 2.
The system will be a 1410 Data Processing System.
The core-storage size will be 80,000 positions.
The system will be disk oriented.
The system files will contain no tape labels.
There will be no Tele-processing devices.

```
      6         16   21
*** INSERT BOOTSTRAP CARD ***
     MON$$      DATE YRDAY
     MON$$      JOB  GENERATE DISK SGF
     MON$$      ASGN LIB,E2
     MON$$      ASGN MJB,E3
     MON$$      ASGN MGO,E4
     MON$$      ASGN MW1,E5
     MON$$      ASGN MW2,E6
     MON$$      ASGN MW3,E7
     MON$$      MODE GO,SG
     MON$$      EXEQ AUTOCODER,,,NOFLG,NOPCH
                HEADRGENERATE DISK SGF
                GEN01P1,R1,X1
                GEN02,1,A0,A1
                GEN02,2,B0,B1
                GEN03E1,00000000,2199,E2,00220000,2599,E3,00260000,2999,
                     E4,00300000,3399,E5,00340000,3799,E6,00380000,4199,
                     E7,00420000,4599,E8,00460000,4999,E9,00500000,5399
                GEN04G1,00000000,2199,G2,00220000,2599,G3,00260000,2999,
                     G4,00300000,3399,G5,00340000,3799,G6,00380000,4199,
                     G7,00420000,4599,G8,00460000,4999,G9,00500000,5399
                GEN081790000110,,55,20,099,E1,R1,,,P1,X1
                GEN0910
                GEN1010,E4,G1,E6,E5,G2
                GEN11
                DEVDF1,729,1402,1403
                DEVDF2,7330
                DSKDF1,00
                DSKDF2,00
                IOKDF1410,,,,,,,8
                END
     MON$$      ASGN MW2,A2
     MON$$      EXEQ SG1
                CREATDSYSTEM
                END
     MON$$      EXEQ LINKLOAD
                INPUTMW2
     MON$$      EXEQ SG2
                LOCATM,MACROLIB
                INSERM
                LOCATC,CREATLIB
                INSERC
                LOCATR,IBMLIBR
                INSERR
                END
     MON$$      END
```

Figure 4. Control Cards Required for a Typical SGF for a Disk-Oriented System

The Core Image file will not be available.
The POW program will not be included.
The Standard Print Unit will be a 1403 Printer.
The Standard Punch Unit will be a unit-record punch.
AIU capability will not be included.
The number of lines per page will be 55.
The console inquiry message area will consist of 20 positions of core storage.
JOB cards will not be punched.
All Monitor control cards are to be typed and printed.
The new system will normally be available in the disk area whose assignment symbol is E1.
The SIU will normally refer to R1.
The SPR will refer to P1.
The SPU will refer to X1.
Ten reserve units will be established.
Ten work units will be established.
The IOCS will provide routines for unit-record equipment and 729 tape units on channel 1.
The IOCS will provide routines for 7330 (and 729) tape units on channel 2.
The IOCS will provide for one module of disk on both channel 1 and channel 2.
Write disk checks will be performed.
The last source statement to Autocoder is the END card.

The EXEQ SG1 card contains a 7 in column 59 to indicate the actual machine size.

The SG1 control cards begin with the CREAT DSYSTEM card. This card requests Create Library package DSYSTEM and produces control information for the Linkage Loader. The control information will be in the form of Linkage Loader control cards.

The SG1 control cards terminate with an END card.

The EXEQ LINKLOAD card is followed by the INPUT MW2 card. The INPUT card directs LINKLOAD to obtain its control information from the tape file MW2 prepared by SG1.

The EXEQ SG2 card contains an additional control punch:

COLUMN	CONTENTS	
59	7	Character indicates the actual machine size.

SG2 now produces a new output tape on tape file MW2. The order of the disk file, except for the position of the relocatable library, is not important in a disk-oriented system because of the random access capability of disk storage. The newly created output file is on tape unit MW2. To use this new system, it is necessary to load this tape onto the disk. (See "Disk Load Program" for instructions.)

Building an SOF

This operation is essentially a "copy" function. Each item to be copied must be specifically requested. Any item(s) not specifically requested will not appear on the output file.

Organization of the File

In Example 1, the programs required for the SOF run were converted into absolute format.

A consideration for constructing a disk SOF is to eliminate elements from the system so that less disk storage is required. Less disk area occupied by the system means that there will be more data area space available for production jobs.

Organization of the Control Deck for the SOF

The control deck for this operation is composed of the following sections:

1. Initialization, including the DATE card.
2. JOB.
3. ASGN cards assign symbolic units to physical input/output devices.
4. MODE card describes the program operation wanted for the job.
5. EXEQ SG1 card causes the system to locate and load SG1. The cards that follow this EXEQ card must be Class III SG control cards. These control cards instruct SG1 to create a work file for the Linkage Loader.

NOTE: SG control cards, Class III, may be interspersed with (or replaced by) Linkage Loader control cards.

6. EXEQ LINKLOAD card causes the Linkage Loader to be located and loaded. This EXEQ card is followed by a control card which instructs the Linkage Loader to obtain its control information from the file just created by SG1. In a disk-oriented system, only one EXEQ LINKLOAD card may appear in the control card deck for each generation.
7. EXEQ SG2 card causes SG2 to be located and loaded. The cards that follow this EXEQ card are divided into two distinct groups. The first group consists of Class I SG control cards only. The Class I control cards direct SG2 to locate the named elements and to copy them onto the new output file. The second group is made up of Class II, III, and IV SG control cards. (Class IV control cards must be last.) This group directs SG2 to perform some functions with the libraries and to copy those libraries onto the new output file after the function requested is complete.
8. END.

The newly created output file is a tape. In order to use this system it will be necessary to load this tape onto disk storage. (See "Disk Load Program" for instructions.)

Example 2

Figure 5 is an example that illustrates the control cards needed to build a typical SOF. Inclusion of a user-written program in the SOF is shown.

The sample decks begin with standard initialization information. This is followed by the JOB card. The MODE card sets an internal indicator that is tested by the dependent programs that must alter their method of operation for System Generation mode.

The group of ASGN cards assigns the required files that are to be used for this job.

The EXEQ card for this run does not require machine size indication in column 59; it is assumed that the SGF reflects the actual machine size.

The control cards that follow the EXEQ SG1 card request SG1 to extract the control information from the Create Library packet named DFORTRAN, and to pass this information to the Linkage Loader via tape file MW2.

The EXEQ LINKLOAD is followed by the INPUT MW2 card. The INPUT card directs the Linkage Loader to obtain its control information from tape file MW2, as prepared by SG1. At the end of file on MW2, the Link-

```
      6         16   21
*** INSERT BOOTSTRAP CARD ***
      MON$$     DATE YRDAT
      MON$$     JOB  CREATE DISK SOF ORIENTED TO USER PROGRAM AND FORTRAN
      MON$$     MODE SG
      MON$$     ASGN LIB,E2
      MON$$     ASGN MJB,E3
      MON$$     ASGN MW2,A1
      MON$$     EXEQ SG1
                CREATDFORTRAN
                END
      MON$$     EXEQ LINKLOAD
                INPUTMW2
                PHASEUSERNAME
      **** RELOCATABLE DECK FOR USER PROGRAM ***
      MON$$     EXEQ SG2
                INCLDIBSGDL
                INCLDIBBOOT
                INCLDLINKLOAD
                END
      FORTRANLIBLOCATR,IBMLIBR
      IBSRTCOMANDELETR,IBCBLDVZER
      IBRANDOM  DELETR,TPRDLIBGEN
                END
      MON$$     END
```

Figure 5. Control Cards Required for a Typical SOF for a Disk-Oriented System

age Loader returns to the SIU and gets the control information to process the user-written program.

The first group of cards presented to SG2 are Class I control cards. They indicate to SG2 that the programs named are to be copied from the SGF to the new master tape file. After the three named programs are copied, SG2 will copy the FORTRAN and the user-written programs that were just placed on the Job file by the Linkage Loader.

The next group of cards directs SG2 to locate IBMLIBR, change its name to FORTRANLIB, and to delete from this library the named routines and those that exist between the given names. The new FORTRANLIB is then copied onto the new master tape.

When the END card is read, the new file is produced by SG2 and a message is typed stating the unit on which the output file, MW2, is located. See "Disk Load Program" for a description of how to load this new file onto the disk.

Shared Disk Files

Four basic IOCS generations are available (on a per channel basis) for a shared disk file environment. The basic generations may be used in many combinations in the sharing systems (see "Permissible Combinations of Generations" in this section).

Four IOCS Generations

The four types of generations available, and their arbitrary designations (Type A, Type B, etc.), are as follows:

1. *No Arm Sharing (Type A):* Type A generation is suited to applications where the systems share the same IBM 7631 File Control unit, but do not compete for the same disk arm(s). A system using Type A generation should not share the file control unit with a system using any other type of shared-file generation.

2. *Arm Sharing (Type B):* Type B generation is suited to applications where the systems share the same IBM 7631 File Control unit and compete for the same disk arm(s). Under Type B generation, one system gains control of the file control unit and uses the shared disk file; the other system may perform other input/output operations and/or other processing until the first system has released control of the file control unit.

3. *Arm Stealing—Priority (Type C):* Type C generation is similar to Type B generation in that both systems share the same IBM 7631 File Control unit and compete for the same disk arm(s). In Type C generation, however, input/output requests to a shared disk temporarily controlled by the other system that shares the disk are issued repeatedly until the requests can be serviced; no other input/output operations or other processing can be performed. Type C generation is suitable for high-priority operations that must be serviced at the possible expense of other input/output operations or other processing.

4. *Arm Stealing—No Priority (Type D):* Type D generation is a logical counterpart of Type C generation. In Type D generation, control of the file control unit is relinquished whenever possible to enable servicing of higher priority requests (e.g., those initiated from a Type C generation).

Permissible Combinations of Generations

The permissible combinations of IOCS generations for two IBM 1410/7010 Data Processing Systems sharing an IBM 7631 (Model V) File Control unit are indicated in the following list.

NOTE: "System not using disk" means that a Prevent Seek Complete instruction (or its equivalent) has been executed and that either (1) the system has an IOCS with disk capabilities, but does not issue disk commands, or (2) the system's IOCS has no disk capabilities.

IBM 1410/7010 SYSTEM 1	IBM 1410/7010 SYSTEM 2
Normal (not shared) disk IOCS	System not using disk
Type A	System not using disk
Type A	Type A
Type B	System not using disk
Type B	Type B
Type B	Type C
Type B	Type D
Type C	System not using disk
Type C	Type C
Type C	Type D
Type D	System not using disk
Type D	Type D

For an IBM 1410/7010 Data Processing System and some other IBM 7000 Series Data Processing System sharing an IBM 7631 (Model III) File Control unit, one combination of IOCS generations is permitted: a Type A generation for the IBM 1410/7010 system and an equivalent generation for the other system sharing the file. If the latter system is not using the disk, the IBM 1410/7010 can use any IOCS generation (e.g., Types B or C).

Specifying Generation Desired

Specification of the type of IOCS generation desired in a shared disk environment is made in the DSKDF macroinstruction described under "Disk Definitions for Resident IOCS (DSKDF)." In this specification, the channel number is prefixed with the type designation (A, B, etc.) of the generation desired.

General Maintenance Considerations

Maintenance of the Operating System covers many possible variations. Listed below are some of the important aspects:

Change to Monitor: Requires complete regeneration of the SGF, SOF, all Job files that have been saved, and all TP Library files.

Change to a Dependent Program in the Operating Section: Requires recompilation of affected modules, copying (INCLD) any unaffected programs, and regeneration of affected programs.

Change to Library (other than Monitor library elements): Requires updating of library, plus regeneration of any programs in the operating section which were affected. As in above item, any unaffected programs can be copied by use of the INCLD card. By careful planning, the user should be able to make changes to an existing relocatable library and also incorporate those changes into a new operating section as part of one job. For this type of operation, the reader should review the control card descriptions of the operation of the Go file during maintenance of the Relocatable Library. Refer to Class IV control cards INSER and REPLC, under "System Generation Control Cards."

Instead of the above method, the SG4 and SG5 programs can be used to update the libraries, as described in the section "System Maintenance." Each time the library modules are to be updated, IBM supplies a tape containing the changes to be made. This tape is used with the SG5 program to prepare an input tape for updating the libraries. The program has an option that permits it to be used with a minimum disk system having only one tape unit available to the Operating System program. If the user must make his own changes to IBM program modules, he can use the SG4 program for making the changes to the modules and for maintaining the modules.

A careful study of the control card descriptions is required to utilize the maintenance capabilities efficiently.

Check List for System Generation (Disk-Oriented)

1. The programs in System Generation use the last (highest) core-storage position as a starting point from which certain elements are built.

2. The Sort Definition program should be generated by the initial generation if sort or merge programs are to be created on an SOF.

3. The user can modify the Macro Library and the Create Library, but cannot create additional libraries with records of the same format as these libraries. A Relocatable Library can also be modified. The library must be loaded onto the LIB file when the system is loaded on the disk.

4. COBOL and Autocoder use symbolic units MW1, MW2, and MW3 for work files during compilation; FORTRAN uses MW1 and MW2. MW1 and MW3 should be assigned to a different channel and/or module from MW2 for balanced and efficient usage of the 1301 disk.

5. The Create Library must be named CREATLIB, and the Macro Library must be named MACROLIB.

6. If the COBOL "ENTER" verb is used in conjunction with FORTRAN subprograms, the relocatable subprograms required to run with COBOL and FORTRAN object programs (refer to "Relocatable Library Contents") must be in the *same* relocatable library.

7. The order of elements on the disk is of little importance because of the random access nature of the device. *However, the placement of some of the elements on the output tape, which contains the system, can be critical, and the following points should be observed:*

   a. The first program on the tape must be IBSGDL. This is the Disk Load program.
   b. The second program must be IBBOOT. IBBOOT, for a disk-oriented system, comprises a bootstrap program (IBBOOT2D), the Resident Monitor, and the Transitional Monitor.
   c. The remaining programs may be in any order if they have been included from an existing SGF. If the system that is being built is to be capable of generating another system, IBSGDL must be included again.
   d. If an entire system is being generated, IBSGDL must be generated as the first program. Also, if the entire system being generated is to be capable of generating another system, then the IBSGDL program must also be generated last.

8. Table 2 indicates the ASGN cards that are required during System Generation.

9. The Generalized Tape Sorting program requires a minimum of four tape units (including the SOF). Additional tape units increase the program's efficiency. See the publication *Generalized Tape Sorting Program.*

10. Each initialization of a disk system requires that the BOOT1 card be first in the SIU. The contents of this card are typed on the console printer during system loading. The operator key punches the card and places it in the SIU.

11. The Generalized Disk Sorting Program requires two disk work areas, preferably on separate modules. Any tape units used must be in addition to the basic

requirements for the system. See the publication *Generalized Sorting Program Using IBM 1301/2302 Disk Storage.*

12. Programs that require the Autocoder "No-Clear" option for DA statements should *not* be placed on the SOF.

Table 2. Disk System Input/Output Requirements

Physical Unit		1	2	3	4	5	6	7	8	9
Symbolic Unit		SOF	SIU	MW1	MW2	MW3	MJB	MGO	LIB	SPR
Program used in System Generation	Autocoder	Required	Required	Work File	Work File	Work File		Output		Optional
	SG1				*Linkage Loader Input File			Not Used		
	SORT-DEFINE				*Linkage Loader Input File			Not Used		
	LINKLOAD				*Linkage Loader Input File		Output	From Autocoder	Input	
	SG2				*New SOF		Input	Possible Input	Input	

* Must be a tape unit.

Organization of Data Files on IBM 1301 or 2302 Disk Storage

Prior to System Generation, organization of disk storage must be determined; assignment symbols for the physical units into which each disk storage module is divided must be selected, and the disk must be formatted. The Input/Output Control System for the IBM 1410/7010 Operating System provides for a number of methods of organizing a disk file.

Since almost all uses of the disk by system files require Form G (Partitioned Sequential-Geometric) disk files, this form is discussed here. For example, the SOF, compiler work files, the library, and the Go and Job files are Form G files.

Form G (Partitioned Sequential-Geometric) makes it possible for more than one logical file to share the storage area available on one or more cylinders; the record sizes of the different files need not be the same. This can appreciably reduce seek time.

Figure 6 depicts a use of Form G. The outside cylinder, cylinder 000, is assigned to work files MW7, MW8, and MW9 by the control cards shown below.

```
6         16   21
MON$$     ASGN MW7,A1,A2
MON$$     ASGN MW8,A3
MON$$     ASGN MW9,A4,A5
```

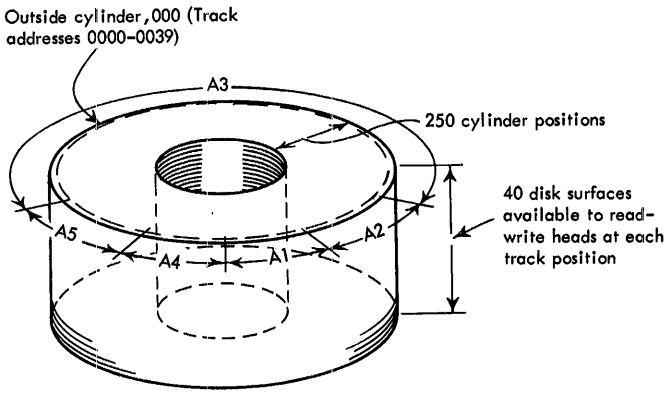

Figure 6. Example of a Disk Module Organized for Form G Files

The relation between the assignment symbols A1 through A5 and the physical units must have been established during System Generation (see the section, "System Description Control Card"). During System Generation:

A1 was specified as 00000000 to 00003900
A2 was specified as 00000001 to 00003901
A3 was specified as 00000002 to 00003902
A4 was specified as 00000003 to 00003903
A5 was specified as 00000004 to 00003904

The Form G address format of these disk areas is:

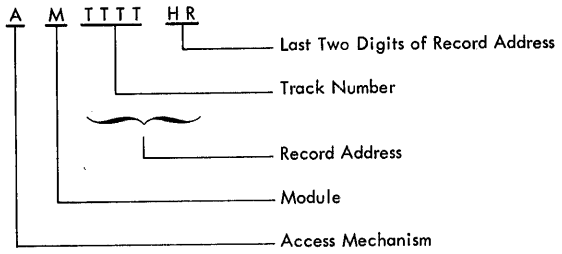

For the example discussed here, access and module (AM) are assumed to be 00. In the Form G address format, as for all geometric disk addresses, the first four digits of the record address correspond to the track number. The only difference between these assignments is the last two characters, the HR identifier.

Each time the user issues a GET or PUT in his source program, the IOCS increments the TTTT section of the address. When end of physical unit is reached, the file is switched to the alternate unit, if one is assigned. (In the example, A2 and A5 are the alternate units for MW7 and MW9, respectively.)

Before this form of record addressing can be used to execute an object program:

1. The cylinder must be formatted to the desired scheme; and
2. During System Generation, the System Monitor must be informed of the addresses by use of macro-instructions GEN03, GEN04, GEN05, and GEN06 — discussed later in this manual.

To use this form of record addressing in a source program, the user must write the proper DTF and DA statements in his source program.

NOTE: Data files can also be placed on IBM 1311 Disk Storage. The organization of the 1311 disk is discussed in *Support of IBM 1311 Disk Storage Drives Under the Operating System.*

Relocatable Libraries

Control cards needed to build and maintain relocatable libraries for a tape-oriented system are discussed first; control cards needed to build and maintain relocatable libraries for a disk-oriented system are then discussed.

Building a New Library as Part of a Tape SOF

During a System Generation run, the user may build additional relocatable libraries on the SOF.

For example, a new relocatable library can be added with the following cards subsequent to the EXEQ SG1 card:

```
          16      21
          ADD     R,newname
```

(Follow ADD card with the relocatable subprograms of the library, *newname*. These cards must appear prior to the first END card.)

In addition, the user must specify the insertion point of the new library. (All relocatable libraries and the create packets of the Create Library require that the insertion point be specified.) The insertion point is specified by a PHASE card during an SGF run. During a maintenance run, the insertion point is specified by an INCLD card.

Figure 7 shows the *creation* of an additional library on the SGF; Figure 8 shows the *addition* of a library to the SOF; and Figure 9 shows the *maintenance* of an additional library on the SOF. Control cards related to creation or maintenance of the additional library are indicated by ***.

NOTE: In Figure 7, CREATTRANSIT card(s) may be added to give additional copy(ies) of Transitional Monitor.

Building a Library External to a Tape SOF

Instructions for creating and maintaining external relocatable tape libraries that are not a part of the SOF are given below. During this type of run, no other functions of System Generation may be used.

```
      6         16   21
      MON$$      DATE  YRDAT
      MON$$      JOB   ILLUSTRATE LIBRARY CREATION, GENERATE RUN
      MON$$      ASGN  MJB,A1
      MON$$      ASGN  MR0,A3
      MON$$      ASGN  MW2,A5
      MON$$      ASGN  MG0,B2
      MON$$      ASGN  MW1,B4
      MON$$      ASGN  MW3,B5
      MON$$      MODE  G0,SG
      MON$$      EXEQ  AUTOCODER,,,NOFLG,NOPCH
                 HEADRGENERATE SGF
                 GEN01P1,R1,X1
                 GEN02/MDM/,1,A0,A1,A2,A3,A4,A5,A6,A7,A8,A9,
                 GEN02/MDM/,2,B0,B1,B2,B3,B4,B5,B6,B7,B8,B9,
                 GEN081700090119,,55,5,099,A0,R1,,,P1,X1,,,B6,SNAP
                 GEN0910
                 GEN1010,A4,B4,A5,B5,A6
                 GEN11
                 DEVDF1,729,1402,1403
                 DEVDF2,729
                 IOKDF1410,,,,,,,,,70000
                 END
      MON$$      EXEQ  SG1                                    7
                 LOCATC,CREATLIB
                 INSERC
                 LOCATR,IBMLIBR
                 INSERR
***               ADD   R,NEWNAME
*** RELOCATABLE MODULES ***
                 LOCATM,AUTOCODER
                 INSERM
                 END
                 CREATTMONITOR
                 CREATRESTART
                 CREATSYSGEN3
                 CREATTAUTOCODE
                 CREATTLINKLOAD
                 PHASEIBMLIBR                                 R
***              PHASENEWNAME                                 R
                 CREATTSYSGEN1
                 PHASECREATLIB                                C
                 CREATTSYSGEN2
                 CREATUTILITIES
                 CREATTMACROPRT
                 CREATTFORTRAN
                 CREATTCOBOL
                 END
      MON$$      EXEQ  LINKLOAD
                 INPUTMW2
      MON$$      EXEQ  SG2                                 L7
      MON$$      END
```

Figure 7. Control Cards for the Addition of a User's Relocatable Library to the SGF of a Tape-Oriented System

```
6          16   21
MON$$      DATE YYYDD
MON$$      JOB  ILLUSTRATE ADDING LIBRARY DURING PROC
MON$$      ASGN MW1,B4
MON$$      ASGN MW2,A5
MON$$      ASGN MJB,A1
MON$$      ASGN MRO,A3
MON$$      MODE SG
MON$$      EXEQ SG1                                  7
           LOCATC,CREATLIB
           INSERC
           LOCATR,IBMLIBR
           INSERR
***        ADD  R,NEWNAME
*** RELOCATABLE MODULES
           LOCATM,AUTOCODER
           INSERM
           END
           INCLDIBBOOT
           INCLDIBRESMON
           INCLDRESTART
           INCLDIBTRANSIT
           INCLDSG3
           INCLDAUTOCODER
           INCLDIBTRANSIT
           INCLDIBMLIBR
           END
   MON$$   EXEQ LINKLOAD
***        PHASENEWNAME
   MON$$   EXEQ SG1
           INCLDSG1
           INCLDCREATLIB
           INCLDSG2
           INCLDUTILITIES
           INCLDMACROPRT
           INCLDIBTRANSIT
           INCLDFORTRAN
           INCLDCOBOL
           INCLDIBTRANSIT
           END
   MON$$   EXEQ SG2
   MON$$   END
```

Figure 8. Control Cards for Addition of a User's Relocatable Library to an SOF of a Tape-Oriented System

Building an Independent Tape Library

Control cards used to build an independent library are shown below. (Assignment symbols used in this example are those appearing under "IBM Master File — Tape-Oriented System.")

```
6          16   21
MON$$      JOB  BUILD LIBRARY
MON$$      ASGN MW1,B4                    BUILDING AN INDEP
MON$$      ASGN MW2,A5                    ENDENT TAPE LIB
MON$$      ASGN MRO,A3
MON$$      ASGN MJB,A1
MON$$      EXEQ SG1
           ADD  R,LIBNAME*
    (RELOCATABLE SUBPROGRAMS TO BE INCLUDED IN
    RELOCATABLE LIBRARY)
           END
MON$$      EXEQ SG2                                    S**
MON$$      END
```

*LIBNAME can be any name not exceeding ten characters.
**Column 57 contains any character.

Execution of SG1 and SG2 produces a library file on symbolic unit MW1 and a list of library subprogram names on the SPR. (Date of compilation of each subprogram is also shown.)

This library file can be used by:

1. Assigning symbolic unit LIB to an assignment symbol other than the one assigned to the SOF; and
2. Referencing the library name as the fourth parameter of the execute card for LINKLOAD.

Every reference to a library in the operation of Linkage Loader accesses the library file. The library name must be the same as the name specified in the EXEQ LINKLOAD card (fourth parameter).

Maintaining a Tape Library

Control cards used to update a library are shown in the following example.

```
6          16   21
MON$$      JOB  MAINTAIN LIBRARY
MON$$      ASGN MW1,B4
MON$$      ASGN MRO,A3
MON$$      ASGN MJB,A1
MON$$      ASGN MW2,A5
MON$$      ASGN LIB,B0
MON$$      EXEQ SG1
           ALTLBTAPE
*MODULEC   REPLCR
```

(New relocatable subprogram, MODULEC, that replaces old MODULEC)

```
*MODULEN   DELETR
 MODULEX   INSERR
```

(Relocatable subprogram, MODULEX)

```
           END
MON$$      EXEQ SG2                    **X
MON$$      END
```

*Subprograms must be referenced in the sequence in which they appear on the tape library.
**Column 57 contains any character.

The execution of SG1 provides an updated library (LIB) on MW1, and the execution of SG2 provides a list of library subprogram names on the SPR. MODULEC is replaced with a new MODULEC; MODULEN is deleted; and MODULEX is inserted at the end of the library. Refer to "System Generation Control Cards" for the method of inserting a subprogram between existing subprograms of the library.

Additional information will be found under "System Maintenance."

Disk Relocatable Library Considerations

All relocatable libraries are "external" libraries in the disk system. During the loading of a disk system (tape-to-disk), the relocatable library on the input

```
     MON$$     DATE YYDDD
     MON$$     JOB  ILLUSTRATE LIBRARY MAINTENANCE, INCLD RUN
     MON$$     ASGN MW1,B4
     MON$$     ASGN MW2,A5
     MON$$     ASGN MJB,A1
     MON$$     ASGN MR0,A3
     MON$$     EXEQ SG1                                    7
               LOCATC,CREATLIB
               INSERC
               LOCATR,IBMLIBR
               INSERR
***            LOCATR,NEWNAME
*** INSER, REPLC, AND DELET CARDS FOLLOWED BY RELOCATABLE MODULES ***
               LOCATM,AUTOCODER
               INSERM
               END
               INCLDIBBOOT
               INCLDIBRESMON
               INCLDRESTART
               INCLDIBTRANSIT
               INCLDSG3
               INCLDAUTOCODER
               INCLDIBTRANSIT
               INCLDLINKLOAD
               INCLDIBTRANSIT
               INCLDIBMLIBR
***            INCLDNEWNAME
               INCLDSG1
               INCLDCREATLIB
               INCLDSG2
               INCLDUTILITIES
               INCLDMACROPRT
               INCLDIBTRANSIT
               INCLDFORTRAN
               INCLDCOBOL
               INCLDIBTRANSIT
               END
     MON$$     EXEQ SG2                                    7
     MON$$     END
```

Figure 9. Control Cards for Maintenance of a User's Relocatable Library of the SOF of a Tape-Oriented System

tape must be loaded into the disk area to be assigned as LIB (instead of the SOF).

During a standard System Generation run, the one library (LIB) can be copied onto the tape that contains the new system. If complete regeneration capabilities are to be preserved, this library must contain all library subprograms supplied on the Master file.

Instructions for creating and maintaining a disk library are given below.

Building a Disk Library

Control cards used to build a new disk library are shown below. (Assignment symbols used in this example are those appearing under "IBM Master File — Disk-Oriented System.")

```
     6         16   21
     MON$$     JOB  BUILD D LIBRARY
     MON$$     ASGN MW2,A1*
     MON$$     EXEQ SG2                **X
               ADD  R,LIBNAME***
```

(Relocatable subprograms to be included in Relocatable Library)

```
               END
     MON$$     END
```

*A1 must be a tape unit.
**Column 57 contains any character.
***LIBNAME can be any name not exceeding ten characters.

The new library is produced on tape unit MW2. To use this new library, it must be loaded onto the disk in the area assigned as LIB. The program DSKLIBLDR is used to perform this function, as described under "Disk Load Programs."

Maintaining a Disk Library

The four general situations for which a disk relocatable library can be maintained are:

1. The library on disk (LIB) to be updated and written onto tape unit MW2; MW2 to contain only the library material.
2. The library-only tape (created by a previous run) to be updated and written onto tape unit MW2; MW2 to contain only the library material.
3. The library on disk (LIB) to be updated and written onto tape unit MW2 following the disk system SOF or SGF.
4. The library-only tape (created by a previous run) to be updated and written onto tape unit MW2 following the disk system SOF or SFG.

All maintenance of relocatable libraries produces tape output. This tape must be loaded onto the disk in the area assigned to LIB to make the library available to dependent programs. (Refer to "Disk Load Programs.")

Figures 10A and 10B, respectively, illustrate the control cards required to provide maintenance for the first two situations listed above.

The third situation is illustrated in Figure 5.

For the fourth situation listed above, two changes must be made in the control cards shown in Figure 5: the LOCAT card is replaced with an ALTLB TAPE card; and an ASGN card is added, immediately preceding the EXEQ SG2 card, to assign LIB to a tape unit.

NOTE: For further information, see "System Maintenance."

```
6          16   21
MON$$      JOB  NO.1, UPDATE LIB ONLY, DISK TO TAPE
MON$$      ASGN LIB,E4
MON$$      ASGN MW2,A1          TO A TAPE UNIT
               (NOTE PUNCH IN COL. 57 OF NEXT CARD)
MON$$      EXEQ SG2                                X
           LOCATR,LIBNAME
***INSER,  REPLC, DELET CARDS AND RELOCATABLE MODULES***
           END
MON$$      END
```

Figure 10A. Control Cards to Update a Disk Library onto a Library-Only Tape

```
MON$$      JOB  NO. 2, UPDATE LIB ONLY, TAPE TO TAPE
MON$$      ASGN LIB,B1              TO A TAPE UNIT
MON$$      ASGN MW2,A1
               (NOTE PUNCH IN COL. 57 OF NEXT CARD)
MON$$      EXEQ SG2                                X
           ALTLBTAPE
***INSER,  REPLC, DELET CARDS AND RELOCATABLE MODULES***
           END
MON$$      END
```

Figure 10B. Control Cards to Update a Library-Only Tape onto a New Library-Only Tape

Sort Definition Program

The Sort Definition program (SORTDEFINE for tape, or DSRTDEFINE for disk) must be an absolute program on the SOF or SGF if sort programs are to be incorporated onto an SOF. The Sort Definition program is incorporated onto an SGF automatically when the CREAT cards TSYSTEM or DSYSTEM are used to create the SGF. An alternative to this is the use of the CREAT card TSRTDEFIN (for tape), or the CREAT card DSRTDEFIN (for disk). Details appear under "Contents of the Libraries," and "Creation Charts."

The absolute Sort Definition program is copied from an SGF to an SOF by inserting the card INCLD SORTDEFINE (or DSRTDEFINE) into the deck, which is illustrated in the section "Building an SOF" under "Basic Concepts." The INCLD card copies the Sort Definition program during the maintenance of an SOF.

Sort programs are incorporated onto an SOF using an operation similar to that discussed under "General Maintenance Considerations" of "Basic Concepts—Tape-Oriented System," or "Basic Concepts—Disk-Oriented System." The control cards for execution of the Sort Definition program are explained in the publications *Generalized Tape Sorting Program* and *Generalized Sorting Program Using IBM 1301/2302 Disk Storage*. Any set of sort definition control cards described in the above publications is acceptable, including those required for a modified sort program.

Figure 11 illustrates the incorporation of a single tape sort program onto an SOF. To incorporate a single disk sort program, the user must change references to SORTDEFINE to refer to DSRTDEFINE.

```
MON$$      DATE YYDDD
MON$$      JOB  ILLUSTRATE SORTDEFINE
MON$$      ASGN MJB,A1
MON$$      ASGN MR0,A3
MON$$      ASGN MW2,A5
MON$$      ASGN MW1,B4
MON$$      ASGN MW3,B5
MON$$      MODE SG
MON$$      EXEQ SG1
           LOCATC,CREATLIB
           INSERC
           LOCATR,IBMLIBR
           INSERR
           LOCATM,AUTOCODER
           INSERM
           END
           INCLDIBBOOT
           INCLDIBRESMON
           INCLDIBTRANSIT
           INCLDAUTOCODER
           INCLDSORTDEFINE
           INCLDLINKLOAD
           INCLDIBMLIBR
           END
MON$$      EXEQ SORTDEFINE
SORTEXMPLEDSORTSORT,FIXED,MULTIPLE,UNMODIF
           DUNITMW1,MW2,MW3
MON$$      EXEQ LINKLOAD
           INPUTMW2
MON$$      EXEQ SG1
           INCLDSG1
           INCLDCREATLIB
           INCLDSG2
           END
MON$$      EXEQ SG2
MON$$      END
```

Figure 11. Control Cards to Incorporate a Single Sort Program onto an SOF

The File Organization System

The File Organization System (FOS) is a set of IBM 1410/7010 Operating System programs designed to store and maintain data files in IBM 1301 or 2302 Disk Storage. FOS permits object programs to address records in disk storage through record identifiers, without using disk addresses, or to retrieve data files in record sequence without the use of outside lists or "finder files."

The File Organization System is created by the System Definition program of the Master file. In both the tape-oriented and disk-oriented Master files, the System Definition program and File Organization System control and operating modules (e.g., IBFOSADD) are included in relocatable form in the Relocatable Library. The System Definition program is also included in absolute form in the operating sections of the Master files. System Generation options provide a variety of ways in which the appropriate SOF may be built from the Master file, and used.

Requirements for System Description Control Cards

The File Organization System requires that specific parameters be included in the control cards defining the type of operating system desired by the user (see "System Description Control Cards"). For purposes of this discussion, it is assumed that the appropriate Disk Definition (DSKDF) control cards are part of the SG deck. The File Organization System imposes no requirements on the DSKDF macro statement except that it must be present. Specific FOS requirements for the System Description control cards are:

1. Parameter 4 of the GEN08 macro statement must be 20 because FOS requires a 20-position console Input Area in Resident Monitor.
2. Parameter 18 of the GEN08 control card must be the address of the first track of the disk storage area reserved as File Directory and Index area for FOS use (see "Monitor Definitions GEN08").
3. Parameter 7 of the IOKDF macro statement must be present if any organized file contains Form 1 records.
4. Parameter 8 must be present if any FOS program is to use the Write Disk Check option.

Relocation and Execution of the System Definition Program

The major methods of relocating and/or executing the System Definition program are outlined below:

If the Master file is used, or if the source SGF contains the System Definition program in absolute form, the definition program can be executed during System Generation to produce user-defined FOS programs. Required control cards for the execution of the System Definition program are:

```
MON$$  EXEQ   DEFINE
userlabel SYSDF  parameters*
```

These control cards, and the subsequent action of the Linkage Loader and SG2 programs, cause the defined FOS program, *userlabel*, to appear on the SOF in absolute form.

The IBLOOKM module is required in the Relocatable Library for the creation of the File Organization System.

If it is desired to copy the absolute-form System Definition program from one SOF to another, or from an SGF to an SOF, the control card INCLD DEFINE should be used. (The INCLD card, if present, must follow the EXEQ SG1 card for a tape-oriented system, or the EXEQ SG2 card for a disk-oriented system.)

* For a description of these parameters see the publication, *"File Organization System for IBM 1301/2302 Disk Storage."*

If an SOF being produced is to contain the System Definition program, in absolute form, and the source file (Master file or SGF) contains the program in relocatable form only, the SG1 control card should be followed by a CREAT DEFINE card, or the Linkage Loader control cards:

```
PHASE  DEFINE
CALL   IBFOSYSDEF
```

Subsequent execution of the Linkage Loader and SG2 programs brings in the System Definition program from the Relocatable Library, relocates the program, and places it on the SOF in absolute form.

The FOS control and operating modules in the Relocatable Library include two forms of the Add function module: IBFOSADD and IBFOSADD2. IBFOSADD is used with IBM 1301 Disk Storage only; IBFOSADD2 must be used with IBM 2302 Disk Storage and may also be used with 1301 Disk. During System Generation, either of these modules may be deleted from the SOF by replacing the INSER R card, which ordinarily follows the LOCAT R,IBMLIBR card, with the following card:

```
IBFOSADDn  DELET  R
```

where n is blank to delete IBFOSADD or 2 to delete IBFOSADD2. The Relocatable Library (except the named module) will be copied.

Building Monitors with Tele-processing Capabilities

The Tele-processing Supervisor becomes a part of the Resident Monitor through System Generation. To permit inclusion of the Supervisor at the proper point in the Resident Monitor, special Create Library packets can be used. These packets aid in building a tape- or disk-oriented Monitor for either a standard configuration or a TP Only configuration.

Basically, there is a create packet that precedes the Supervisor call cards, and another create packet that follows them. The pairs of packets are:

TMONTP1 TMONTP2	These packets create a standard tape Monitor with Tele-processing capabilities.
DMONTP1 DMONTP2	These packets create a standard disk Monitor with Tele-processing capabilities.

The rules governing the calling of the various modules to make up a TP complex, as well as the names and functions of each module, appear in the publication, *Tele-processing Supervisor.*

Figure 12 is an example for building a standard tape Monitor for a Tele-processing system using the IBM 1014.

Figure 13 is an example for building a standard disk Monitor for a Tele-processing system with Programmed Transmission Control (PTC).

```
6         12   21
MON$$      DATE YRDAY
MON$$      JOB GENERATE TP TAPE SYSTEM
MON$$      ASGN MRO,A3
MON$$      ASGN MJB,B3
MON$$      ASGN MGO,B2
MON$$      ASGN MW1,A4
MON$$      ASGN MW2,A5
MON$$      ASGN MW3,B4
MON$$      MODE GO,SG
MON$$      EXEQ AUTOCODER,,,NOFLG,NOPCH
           HEADRGENERATE TP TAPE SYSTEM
           GEN01P1,R1,X1
           GEN02/MDM/,1,A0,A1,A2,A3,A4,A5,A6,A7
           GEN02/MDM/,2,B0,B1,B2,B3,B4,B5,B6,B7
           GEN08170099O110,4000,55,20,099,A0,R1,,,P1,X1,,,B6,SNAP
           GEN0910
           GEN1010,A4,B4,A5,B5,A6
           GEN115
           DEVDF1,729,1402,1403,,TP
           DEVDF2,729
           IOKDF1410,,,,,,,,,70000
           TPDIR30,10
           END
MON$$      EXEQ SG1
           LOCATR,IBMLIBR
           INSERR
           LOCATM,AUTOCODER
           INSERM
           END
           CREATTMONTP1
           CALLNTPSTARTCH1
           CALLNTP1014CH10
           CALLNTPENDCH1
           CALLNTPTAPELDRA
           CALLNTPSUPER
                          USER INSERTS THE EXECUTIVE HERE
           CREATTMONTP2
           PHASETPATLIBGEN
           CALL TPATLIBGEN
           CREATTLINKLOAD
           CREATTAUTOCODE
           CREATTSYSGEN1
           CREATTSYSGEN2
           PHASEIBMLIBR                                  R
           END
MON$$      EXEQ LINKLOAD
           INPUTMW2
MON$$      EXEQ SG2
MON$$      END
```

Figure 12. Control Cards for a Tape-Oriented Monitor for a Tele-processing System with IBM 1014

Each example indicates where the user is to insert his Tele-processing Executive. This can be done in one of three ways:

1. The user can insert the relocatable object deck at the place indicated in the examples.
2. The user may have included the Executive in the relocatable library and can call it with a CALLN card.
3. The user may insert his Autocoder source deck after the TPDIR macro and have the object deck placed on the Go file. This module can then be called with a CALLN card at the appropriate time.

Random-Processing Scheduler

One of the relocatable subprograms (IBRANDOM1) required by the Random-Processing Scheduler must be compiled by each user. The following steps indicate the method of generating the subprogram and incorporating it into IBMLIBR:

1. The user includes the GENRM macro (see "System Description Control Cards") in his deck when generating the SGF. This produces IBRANDOM1, the relocatable subprogram, written on the Go file.
2. The user then requests that IBRANDOM1 be incorporated into the Relocatable Library by placing the following card into the deck following the LOCATR,IBMLIBR card:

```
6             16      21
IBRANDOM1  INSER  R,IBRANDOM2
```

If no other maintenance is to be performed on the library, this is the only card required. Refer to Class IV control cards (under "System Generation Control Cards") if other maintenance is to be done.

Macro Print and Punch Program

The Macro Print and Punch program can write information selected from the Macro Library onto the Standard Print Unit and onto either the Standard Punch Unit or any MRX or MWX symbolic unit previously assigned to a tape unit. The output on the SPR is printed output, and the output on the SPU or tape unit is punched output of MACROPRT. The printed output can consist of any or all of the following items:

1. The identifier (GET, GEN01, etc.) of each macro routine.
2. The contents of a macro routine.
3. The page and line number of every reference to *L characters* in model statements. L characters are the one-character labels appearing in column 6 of the Library Coding Form. This information is referred to as "cross-reference" information.

The punched output consists of 80-character records in standard Macro Library format (see the publication *Autocoder*, Form C28-0326). The following SYSGEN control card will appear on the punched output file before the first statement of each macro punched:

```
     6         16   21
*** INSERT BOOTSTRAP CARD ***
     MON$$     DATE YRDAY
     MON$$     JOB  GENERATE DISK SYSTEM WITH TP
     MON$$     ASGN LIB,E2
     MON$$     ASGN MJB,E3
     MON$$     ASGN MGO,E4
     MON$$     ASGN MW1,E5
     MON$$     ASGN MW2,E6
     MON$$     ASGN MW3,E7
     MON$$     MODE GO,SG
     MON$$     EXEQ AUTOCODER,,,NOFLG,NOPCH
               HEADRGENERATE DISK SOF WITH TP
               GEN01P1,R1,X1
               GEN02,1,A0,A1
               GEN02,2,B0,B1
               GEN03E1,00000006,2199,E2,00220000,2599,E3,00260000,2999,
                    E4,00300000,3399,E5,00340000,3799,E6,00380000,4199,
                    E7,00420000,4599,E8,00460000,4999,E9,00500000,5399
               GEN04G1,00000000,2199,G2,00220000,2599,G3,00260000,2999,
                    G4,00300000,3399,G5,00340000,3799,G6,00380000,4199,
                    G7,00420000,4599,G8,00460000,4999,G9,00500000,5399
               GEN08179099O110,4000,55,20,099,E1,R1,,,P1,X1,,,,SNAP
               GEN0910
               GEN1010,E4,G1,E6,E5,G2
               GEN115
               DEVDF1,729,1402,1403,,,PTC
               DEVDF2,729
               DSKDF1,00
               DSKDF2,00
               IOKDF1410,,,,,,,8
               TPDIR30,10
               END
     MON$$     ASGN MW2,A2
     MON$$     EXEQ SG1
               CREATDMONTP1
               CALLNTPPTCCH1
               CALLNTPSUPER
               CALLNTPDISKLDRA
                                 USER INSERTS THE EXECUTIVE HERE
               CREATDMONTP2
               PHASETPADLIBGEN
               CALL TPADLIBGEN
               CREATDLINKLOAD
               CREATDAUTOCODE
               CREATDSYSGEN1
               CREATDSYSGEN2
               END
     MON$$     EXEQ LINKLOAD
               INPUTMW2
     MON$$     EXEQ SG2
               LOCATR,IBMLIBR
               INSERR
               END
     MON$$     END
```

Figure 13. Control Cards for a Disk-Oriented Monitor with Programmed Transmission Control TP Capability

```
6              16     21
NAME1          REPLCM
```

where NAME1 is the macro name. In addition, every macro statement will have the ID field punched in positions 75 through 80 as follows:

```
                                   75     80
                                   bNAME1
```

where NAME1 is the macro name. The last record of the punched output file is the following SYSGEN control card:

```
               16
               END
```

The Create Library packets needed to build this program for a tape- or disk-oriented system appear under "Creation Charts."

System Requirements

MACROPRT is not run during System Generation; it requires a standard job run. The running of the program requires that MACROPRT must have been placed on the SOF during System Generation.

EXEQ Card

The EXEQ card is a standard Monitor control card and is used to call in the MACROPRT program. It also serves to select the printing or punching options (or both).

The printing of macros is always assumed; the following EXEQ card will cause printing only:

```
6              16       21
MON$$          EXEQ     MACROPRT
```

The following EXEQ card will cause printing and punching:

```
6              16       21
MON$$          EXEQ     MACROPRT , , , xyz
```

where xyz is SPU, MRX, or MWX and indicates where to put the macro statements.

To inhibit printing while punching, the following EXEQ card is used:

```
6              16       21
MON$$          EXEQ     MACROPRT, , , xyz, NOPRT
```

PRINT Card

Only the PRINT control card, other than the EXEQ card, is needed to run MACROPRT. The PRINT card may be repeated and has the following format:

CARD COLUMN	CONTENTS	EXPLANATION
1-5	blank	Not used.
6-11	HEADER	Make entry if the program is to list the name of each macro routine; otherwise, entry is blank. (This entry should appear only on the first card of the control package.) This parameter applies only to printed output.

CARD COLUMN	CONTENTS	EXPLANATION
12-15	blank	Not used.
16-20	PRINT	Identifies this card type.
21-72		The information in this field defines which macro routines are to be completely printed or punched, and whether or not cross referencing is to be made. The field may be left blank only if the name of each macro routine is to be printed. The first parameter to be entered is left-justified in column 21. If more than one parameter is placed in this field, the parameters must be separated by commas. No blanks may appear in or between parameters.
	CROSS	CROSS, if entered, must be the first parameter. It directs the program to cross reference L characters in model statements on the printed output only.
	ALL	ALL must be either the first or second (if CROSS is used) parameter if *all* macro routines in the Macro Library are to be printed or punched. NOTE: When this entry is used, the program will assume that there are no other entries in the operand. If the ALL entry is not used, macro routines for which information is desired *must* be specified in the sequence in which they reside on the library. Refer to "Macro Library Contents" for the sequence of the Macro Library. Examples of the specification of the macro routines to be included are given below.
	START *name8*	All macro routines from the beginning of the library up to and including *name8* will be printed or punched.
	name7	Only *name7* will be printed or punched.
	name4	All macro routines starting with *name4* and up to and including *name6* will be printed or punched. (*name6* must physically follow *name4* in the library.)
	END *name3*	All macro routines starting with *name3* and continuing through the end of the library will be printed or punched.

NOTE: Because of the above parameter definitions, no macro instruction can have the names CROSS, ALL, START, or END.

Example 1: Print the name of each macro routine.

```
6               16
HEADER          PRINT
```

Example 2: Print or punch the name and contents of each macro routine.

```
6               16      21
HEADER          PRINT   ALL
```

Example 3: Print or punch the name, contents, and cross reference of each macro routine.

```
6               16      21
HEADER          PRINT   CROSS, ALL
```

Example 4: Print or punch the contents of selected macro routines, from the beginning of the library through MACRA; skipping to and printing or punching MACRC; skipping to MACRF; printing or punching from MACRF to MACRH; skipping to MACRN; and printing or punching from MACRN to the end of the library, cross referencing each macro routine selected on the printed output.

```
                16      21
                PRINT   CROSS, START-MACRA, MACRC,
                        MACRF-MACRH, MACRN-END
```

Data Flow During System Generation Runs

This section is optional (but recommended) background reading that provides an over-all correlation between the files operated upon and the data flow required to generate a system.

This section graphically depicts the tape layout for the Master file, a typical SGF, and a typical SOF. Most of the section summarizes over-all data flow for the System Generation of a tape- or disk-oriented system.

Tape Layout

Figure 14(A) depicts the Master file. It shows the operating section and the three libraries.

Figure 14(B) is a typical SGF layout. This reel of tape serves as the "Master file" for a particular installation. The operating section of the SGF consists of a System Monitor tailored to the specific machine environment of the installation, and those programs required for System Generation.

The three types of libraries on the Master file may be transferred to the SGF. During this process the user may add to, delete from, and modify the libraries.

Figure 14(C) is a typical SOF layout. The System Monitor of the SOF may be copied from the SGF or generated for specific features. The rest of the SOF consists of programs in absolute format and any library subprograms that the user has transferred from the SGF or has constructed.

Over-all Data Flow — Tape System

Figure 15 shows over-all potential data flow for the System Generation of a tape-oriented system. All of the capabilities are not necessarily used in a typical System Generation. The source file shown in the figure

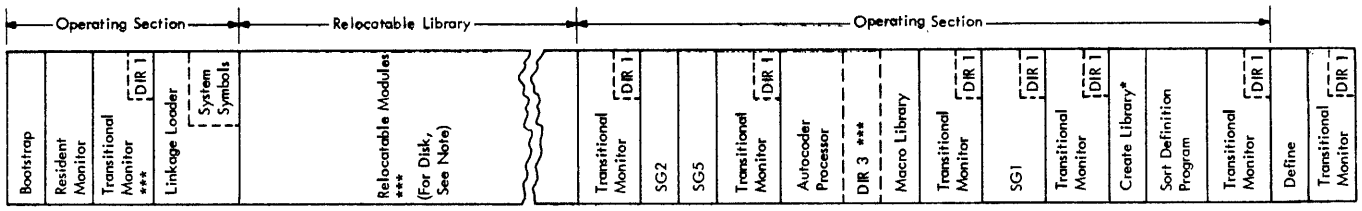

A. The Tape Master File as Supplied by IBM

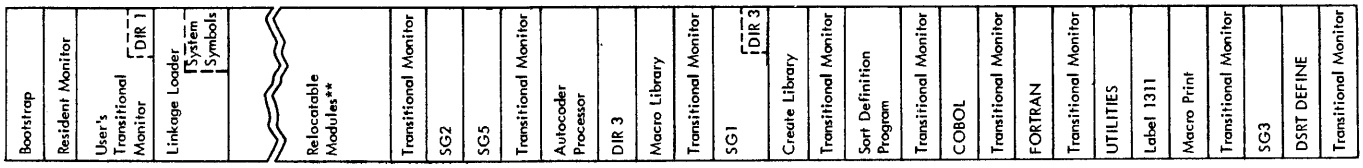

B. The SGF Generated by the TSYSTEM Create Packet

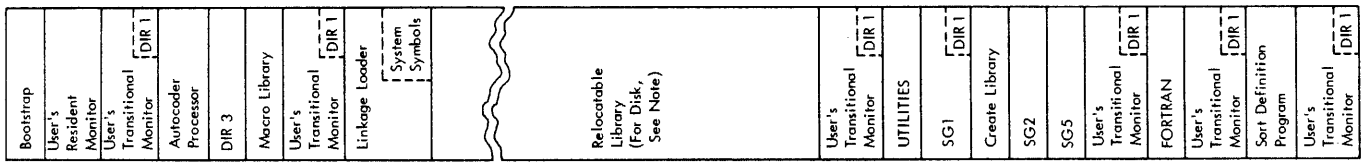

C. A Typical SOF Copied from the SGF, with Insertion of Multiple Transitional Monitors for Tape Systems Only

* Refer to "Creation Charts."
** Refer to "Relocatable Library Contents."
*** DIR1 is the directory of phase names.
DIR3 is the Macro Library directory.

Figure 14. The System Files

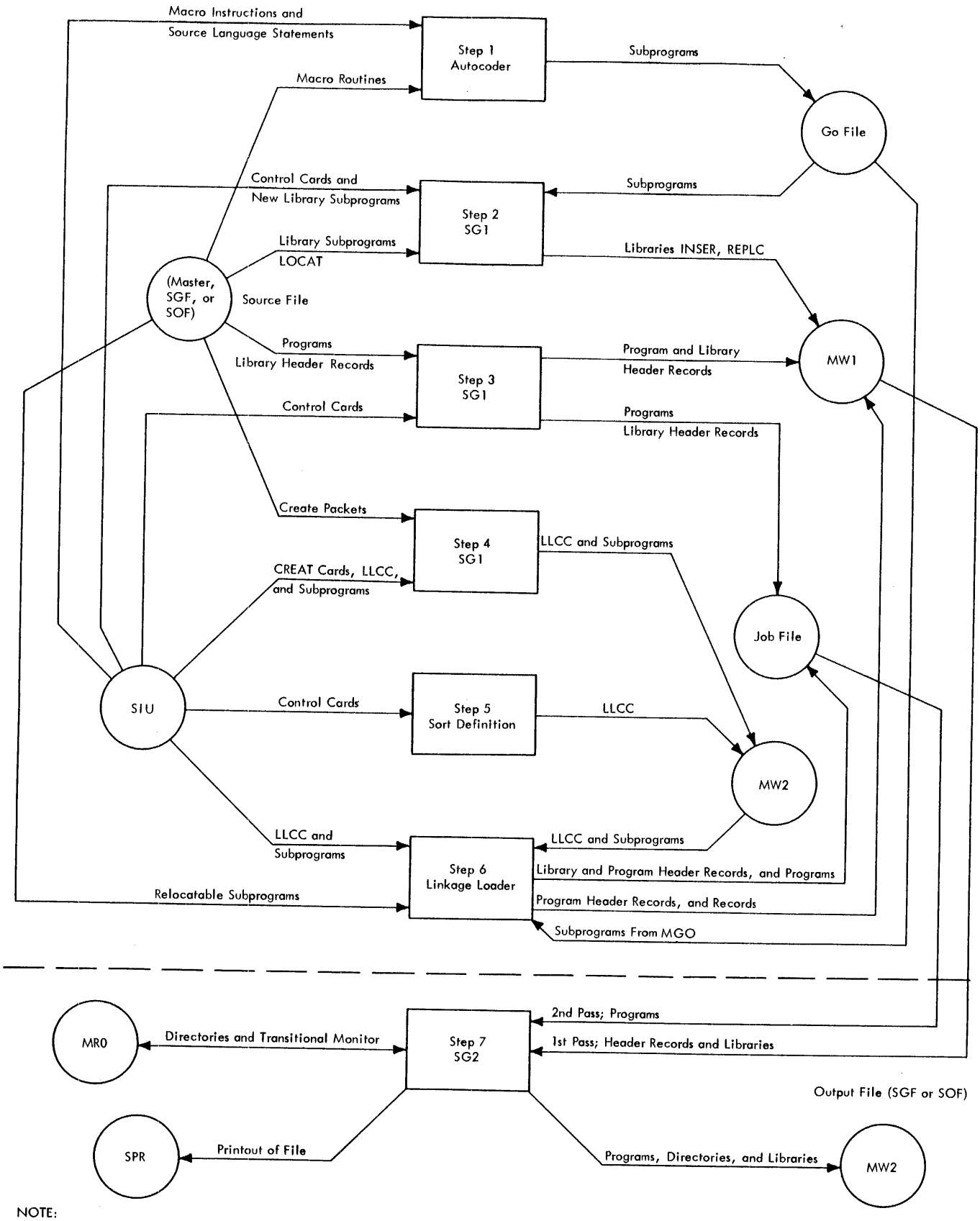

Figure 15. Steps in the Generation of a Tape System

may be a Master file, SGF, or SOF. Each major step in the figure is explained below.

STEP	PROGRAM BEING EXECUTED	ACTION PERFORMED
1	AUTOCODER	Autocoder produces relocatable subprograms on the Go file.
2	SG1	SG1 copies and/or updates libraries from the source file. New libraries also may be created. Input is from the SIU or, in the case of relocatable libraries, may also come from the Go file. Output consists of libraries on MW1.
3	SG1	SG1 copies existing programs from the source file onto the Job file. A header for each program copied is written on MW1. If any library is to be placed onto the output tape, only a header indicating the location for the library is written on the Job file and MW1.
4	SG1	SG1 transfers Linkage Loader control cards from the Create Library onto MW2. SG1 also places on MW2 any Linkage Loader control cards or subprograms encountered in the SIU.
5	SORTDEFINE	This program generates Linkage Loader control cards, from its input parameters, onto MW2.
6	LINKLOAD	Linkage Loader converts relocatable subprograms into absolute programs and places them on the Job file. Control card input may come from the SIU or MW2. Relocatable input may come from a relocatable library on the source file, the Go file, the SIU, and/or MW2. Linkage Loader also produces a header on MW1 for each phase it produces on the Job file.
	NOTE: Step 2, if used, must be performed only once during a System Generation run. Steps 3, 4, 5, and 6 may be performed any number of times, and in any sequence desired. The order of the new SGF or SOF (see step 7) is determined solely by the order of the elements on the Job file.	
7	SG2	SG2 must be the last program executed in any System Generation run. It performs two major functions. It first scans MW1. MW1 contains all libraries and a header for every phase of each program on the Job file. From this information, it produces two directories and writes them on MR0. If the Standard Print Unit is available in the system, this step also lists the names and order of the subprograms of each library, and the names and order of each program of the SGF or the new SOF. The second function is to copy the Job file to MW2, which contains the SGF or the new SOF. As it copies, it inserts directories from MR0 and libraries from MW1 when there are requesting headers. It also provides blocked, absolute-format records.

Over-all Data Flow — Disk System

Figure 16 shows over-all potential data flow for the System Generation of a disk-oriented system. All of the capabilities are not necessarily used in a typical System Generation. The source file shown in the figure may be a Master file, SGF, or SOF that has been loaded onto disk storage. Each major step in the figure is explained below.

STEP	PROGRAM BEING EXECUTED	ACTION PERFORMED
1	AUTOCODER	Autocoder produces relocatable subprograms on the Go file. NOTE: MW2 *must* be assigned to an area on the disk.
2	SG1	SG1 transfers Linkage Loader control cards from the Create Library onto MW2. SG1 also places on MW2 any Linkage Loader control cards or subprograms encountered in the SIU. NOTE: MW2 *must* be a tape file during this and remaining operations.
3	DSRTDEFINE	This program generates Linkage Loader control cards, from its input parameters, onto MW2.
	NOTE: Steps 2 and 3 may be performed any number of times and in any sequence desired.	
4	LINKLOAD	The Linkage Loader converts relocatable subprograms into absolute programs and places them on the Job file. Control card input may come from the SIU or MW2. Relocatable input may come from a relocatable library (LIB), the Go file, the SIU, and/or MW2.
5	SG2	SG2 copies existing programs from the source file and the Job file onto the new output tape.
6	SG2	SG2 copies and/or updates libraries. New libraries may also be created. Input is from the SIU or, in the case of relocatable libraries, may also come from the Go file. If the Standard Print Unit is available in the system, this step also lists the names and order of the subprograms of each library and the names and order of each program of the new SGF or the new SOF.

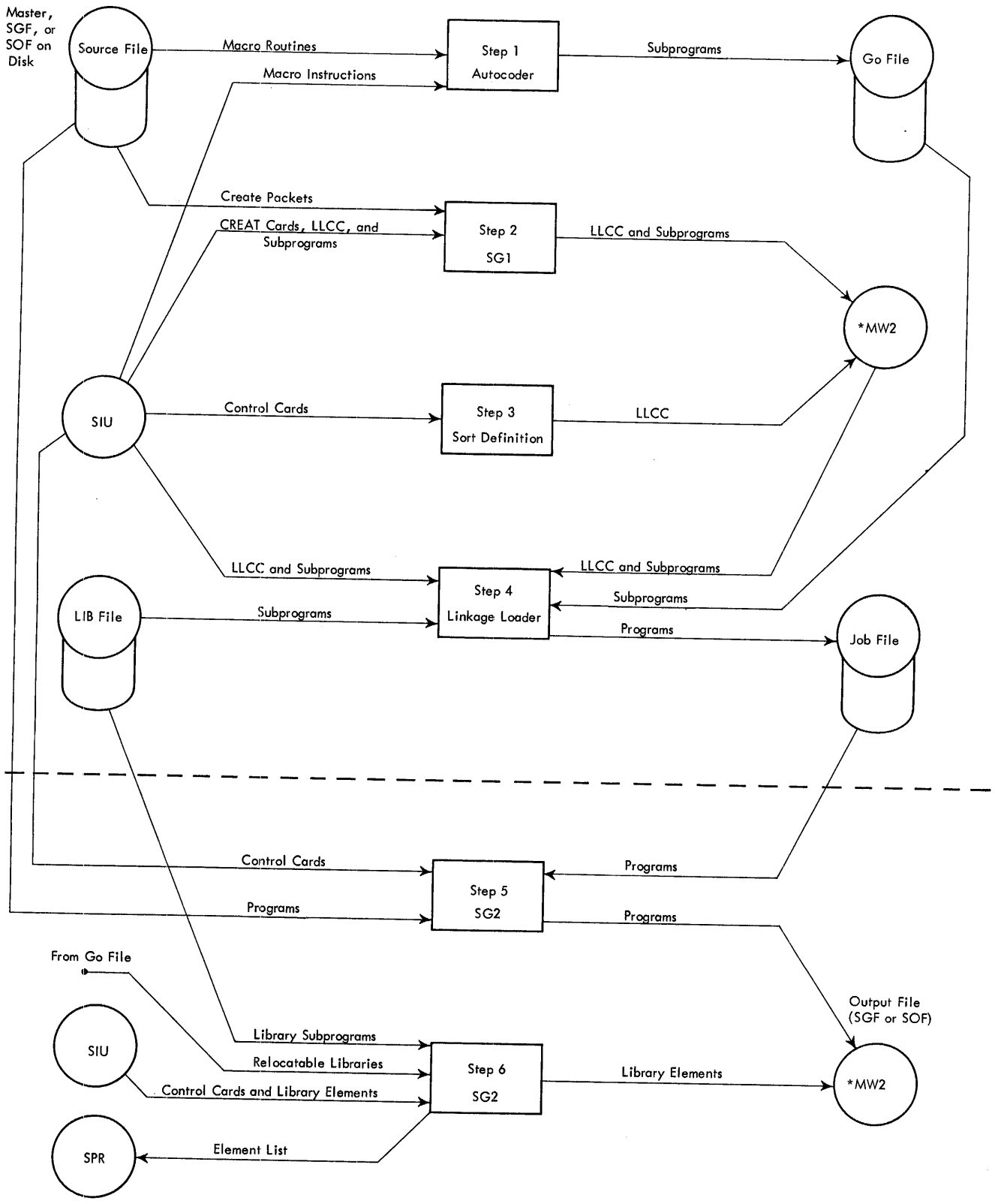

NOTES: *Must be a tape file
LLCC = Linkage Loader Control Cards

Figure 16. Steps in the Generation of a Disk System

This section contains the control cards that define the type of system desired by the user. The cards are source statements to the Autocoder processor. Autocoder, through its macro-instruction facilities, uses the statements to select the modules required to create the desired Monitor and Resident IOCS.

The following Autocoder rules apply to the format of these macro statements:

1. The macro name is written in columns 16-20 (left-justified).
2. The parameters (operands) are written beginning in column 21.
3. The parameters are separated by commas.
4. Blanks are not permissible within a parameter.
5. Omitted parameters must be indicated by writing the comma that would have followed the parameter. (This rule does not apply if the omitted parameter would have been the last on the card.)

The macro statements should be sequenced by the user in the order in which they are described in this section. The GEN11 macro is required whether or not Tele-processing capabilities are desired with the system.

SPOOL Definitions (SPLDF)

The SPLDF macro statement is used to specify the inclusion of routines in the IOCS to handle the SPOOL (Simultaneous Peripheral Operation On Line) feature. This macro statement must be the first macro statement in the generation deck. A separate SPLDF macro statement must be made for each channel for which SPOOL operations are desired. If no SPLDF macro statement is included, SPOOL capabilities will not be available.

NOTE: General information on the SPOOL feature is contained in the publication *System Monitor*, Form C28-0319.

PARAMETER	CONTENTS	EXPLANATION
1	1 or 2	Channel number to which the Unit Record device(s) used for SPOOL are attached.
2	CRD	SPOOL operations will use only IBM 1402 Card Read Punch.
	ALL	SPOOL operations will use IBM 1402 Card Read Punch and IBM 1403 Printer.
3	nnnnn	Size of reserved area in Resident Monitor for user-written editing routine.
4	I/O	The user-written editing routine requests input/output operations. (Inclusion of this parameter causes generation of the Extension of IOCS.)
	blank	The user-written editing routine requests no input/output operations.

Three types of SPOOL operations are available. The type selected determines which parameters of the SPLDF macro statement are to be used. The three types are:

Type I: This type of SPOOL implements normal operation with no blocking, deblocking, or editing of records. Parameters 1 and 2 of the SPLDF macro statement *must* be used; parameters 3 and 4 *cannot* be used. The statement below could be used to specify a Type I SPOOL operation:

```
      16      21
      SPLDF   1, CRD
```

This statement specifies that SPOOL operations on channel 1 will use only the IBM 1402 Card Read Punch for unit record equipment.

Type II: This type of SPOOL permits operations that include user-written editing routines (for blocking, deblocking, etc.); these user-written routines *cannot* request input/output operations. Parameters 1, 2, and 3 of the SPLDF macro statement *must* be used; parameter 4 *cannot* be used. The statement below could be used to specify a Type II SPOOL operation:

```
      16      21
      SPLDF   2, ALL, 05678
```

The statement specifies that SPOOL operations on channel 2 will use the IBM 1402 Card Read Punch and the IBM 1403 printer; a user-written editing routine (not to exceed 5,678 core locations) may be used.

Type III: This type of SPOOL permits including user-written editing routines (for blocking, deblocking, etc.). The user-written editing routines can request input/output operations. All parameters of the SPLDF macro statement must be used; no parameter may be omitted. The following statement could be used to specify a Type III SPOOL operation:

```
      16      21
      SPLDF   1, CRD, 08000, I/O
```

The statement specifies that SPOOL operations on channel 1 will use only the IBM 1402 Card Read Punch; a user-written editing routine (not to exceed 8,000 core locations in size) may be used; the editing routine can request input/output operations.

NOTE: The Extension of IOCS must be generated in the Resident IOCS if a user-written editing routine is to request input/output operations. Use of the fourth (I/O) parameter of the SPLDF macro statement causes generation of this extension. The Extension of IOCS is also generated for any system including Tele-processing programs. Thus, if the user intends to generate a Tele-processing system and has specified Type II SPOOL operation, he can request input/output operations in his user-written editing routines.

For Types II and III SPOOL, the Autocoder source program for the editing routine can be assembled after the generation macro statements by including an EXEQ AUTOCODER card (with columns 6-15 blank) and the source deck comprising the user-written editing routine after the END card for the macro statements. The relocatable user-written editing routine will be placed onto the Go file for subsequent access by the Linkage Loader. In calling the routine, the user must include a PRTCT 00000 card immediately following the first PHASE card for the routine, and a PRTCT card (with blank operand field) after the last END card for the routine. The control cards needed to generate a system including Type II and/or Type III SPOOL are shown in Figure 17. (See "Use of Linkage Loader" in the publication *IBM 1410/7010 Operating System; System Monitor,* Form C28-0319.)

To include a user-written editing routine that is in relocatable form in the Library, the additional EXEQ AUTOCODER card and the edit routine source deck are omitted.

If the edit routine is to be made available on the SIU in relocatable form, the above procedure must be followed. In addition, the CALLN card is removed and replaced with the relocatable module.

```
6          16   21
MON$$       DATE YRDAY
MON$$       JOB  GENERATE TAPE ORIENTED SGF INCLUDING SPOOL TYPE 3
MON$$       ASGN MW1,B4
MON$$       ASGN MW2,A5
MON$$       ASGN MW3,B5
MON$$       ASGN MJB,A1
MON$$       ASGN MR0,A3
MON$$       ASGN MG0,B2
MON$$       MODE GO,SG
MON$$       EXEQ AUTOCODER,,,NOFLG,NOPCH
            HEADRGENERATE SGF
            SPLDF1,ALL,07000,I/O
            GEN01P1,R1,X1
            GEN02/MDM/,1,A0,A1,A2,A3,A4,A5,A6,A7,A8,A9
            GEN02/MDM,2,B0,B1,B2,B3,B4,B5,B6,B7,B8,B9
            GEN081700090119,,55,5,099,A0,R1,,,P1,X1,,,B6,SNAP
            GEN0910
            GEN1010,A4,B4,A5,B5,A6
            GEN11
            DEVDF1,729,1402,1403
            DEVDF2,7330
            IOKDF1410,,A,4,5,,,,,,70000
            END
            EXEQ AUTOCODER
            TITLEUSERPROG
  *      USER PROGRAM SYMBOLIC CARDS      *
            END
MON$$       EXEQ SG1
            LOCATC,CREATLIB                                    7
            INSERC
            LOCATR,IBMLIBR
            INSERR
            LOCATM,AUTOCODER
            INSERM
            END
            CREATTSYSTEM
            PHASEUSEREDIT
            CONGO
            PRTCT00000
            CALLNUSERPROG
            PRTCT
            END
MON$$       EXEQ LINKLOAD
            INPUTMW2
MON$$       EXEQ SG2
MON$$       END                                                L7
```

Figure 17. Control Cards for a Tape-Oriented SGF Including Type III SPOOL

PARAMETER	CONTENTS	EXPLANATION
		Channel 1 Assignment Symbols (ss)
1	ss	1403 Printer
2	ss	Card Reader
3	ss	Card Punch
		Channel 2 Assignment Symbols
4	ss	1403 Printer
5	ss	Card Reader
6	ss	Card Punch
		Channel 1 Paper Tape Reader Assignment Symbol
7	ss	Paper Tape Reader
		Channel 2 Paper Tape Reader Assignment Symbol
8	ss	Paper Tape Reader

The following statement could be used to describe a system with a 1403 Printer and 1402 Card Read Punch on channel 1, and an 1101 Paper Tape Reader on channel 2:

```
16      21
GEN01   P1, R1, X1 , , , , , PT
```

Tape Units (GEN02)

The GEN02 macro statement is used to declare the tape units available to the system. A separate GEN02 statement must be made for each channel.

PARAMETER	CONTENTS	EXPLANATION
1	/MDM/	Use this parameter if the system will include the Core Image file (see GEN08). If included, this parameter must be used in the GEN02 statement for each channel. This parameter must be specified if Checkpoint and/or the Storage Print utility program are desired.

Physical Unit Definitions

Unit-Record Devices (GEN01)

The GEN01 macro statement is used to declare the unit-record devices available to the system and to give each of them an assignment symbol. An assignment symbol (ss) can be any two alphameric characters unique (within the system) to the device it is identifying.

PARAMETER	CONTENTS	EXPLANATION
2	c	Channel number for the units declared in this statement.
3	ss	Assignment symbol for unit 0 in the channel specified in parameter 2 of this statement.
4-12	ss, (etc.)	Assignment symbols for units 1 through 9 on the channel specified in parameter 2 of this statement. (No skipping of unit numbers is permitted – that is, "ss,,ss" is an invalid entry.)

The following statements could be used to declare a Core Image file, five tape units on channel 1, five on channel 2, and three on channel 3:

```
16      21
GEN02   /MDM/,1,A0,A1,A2,A3,A4
GEN02   /MDM/,2,B0,B1,B2,B3,B4
GEN02   /MDM/,3,C0,C1,C2
```

Disk Areas (GEN03-GEN06)

The macro statements GEN03 through GEN06 are used to define physical units in disk storage. The four macros apply, respectively, to disk modules on channels 1 through 4. The information given below is applicable to all four macros; the only distinction between them is the channel identification established by the macro name.

PARAMETER	CONTENTS	EXPLANATION
1	ss	Assignment symbol for the area defined by the next two parameters.
2	amttttthr	a – access mechanism. m – module number. tttt – starting track address. hr – two-digit identifier of the track (HA2) or of the appropriate record area on the track.
3	eeee	Ending track address.
4-45	ss, amttttthr, eeee, (etc.)	The pattern of parameters 1-3 is repeated for each disk area defined within the module(s) on this channel. Three areas can be defined *per card;* fifteen areas can be defined *per macro statement* (see below).

Special Considerations

1. Each of these macro statements (GEN03-GEN06) can consist of one card containing the macro name in columns 16-21, immediately followed by one through four *continuation cards.* (Continuation cards differ only in that columns 16-21 are left blank.) Since three areas can be defined *per card,* fifteen areas can be defined *per macro statement.* If more than fifteen areas are to be defined in the modules on a particular channel, then the macro statement for that channel must be repeated. For example, if twenty areas are to be defined in modules 0 and 1 on channel 2, two GEN04 macro statements are required. (The first would consist of five cards defining fifteen areas, and the second would consist of two cards defining the other five areas.)

2. Although each area defined must be entirely contained within one module, there is no restriction against defining, by one macro statement, areas within different modules.

3. Autocoder can process a maximum of ninety-nine GEN01 through GEN07 macro statements. This factor should be considered in determining whether to begin a new macro statement or to use continuation cards for definition of disk areas. (Only cards with a macro name in columns 16-21 count toward the limit of ninety-nine.)

Example

The following statements could be used to define four areas in module 0 on channel 1, two areas in module 1 on channel 1, and two areas in module 0 on channel 4:

```
16      21
GEN03   EA,001543AA,1943,EB,002700BA,3150,
        EC,003543AA,3943,ED,004700BA,5150,
        GA,010000AA,5000,GB,010000BB,5000
GEN06   KA,005000AA,7500,KB,005000BB,7500
```

1311 Disk (GEN07)

The GEN07 macro statement is used to define physical units on 1311 disk drives. This macro statement performs the same functions for 1311 Disk Storage units that the GEN03-GEN06 statements perform for 1301 and 2302 Disk Storage units.

The GEN07 macro statement defines physical units in two ways:

1. It defines a physical unit in terms of a disk drive number, a beginning sector address, and an ending sector address. The beginning sector address is known as the lower limit, and the ending sector address is known as the upper limit. In this case, the physical unit consists of the sectors starting at the lower limit and continuing through the upper limit. This type of physical unit is called an unlabeled physical unit. It is analogous to a 1301 physical unit.

2. It defines a physical unit in terms of the disk drive number and the label for a specified portion of the disk pack. In this case, the beginning and ending sector addresses of the physical unit are taken from the header label. This type of physical unit is called a labeled physical unit.

Either a labeled or an unlabeled physical unit can be associated with a file that is to be processed either sequentially or nonsequentially. However, for a non-

sequentially processed file, the definition of the physical unit is used only to determine the channel number. Sector limits and labels serve no useful purpose with a nonsequential file, since the disk address of each record to be processed must be provided by the programmer.

Parameters 1 and 2 in the operand field of the statement must be entered as the first two operands in each GEN07 macro statement. The first two parameters are followed by groups of three parameters, with each group defining a physical unit. The contents of parameters 3, 4, and 5 differ when defining an unlabeled or a labeled physical unit, as indicated in the following listing:

PARAMETER	CONTENTS	EXPLANATION
1	1311	This entry specifies that the physical unit is being defined on a 1311 disk drive.
2	c	This number specifies the channel to which the disk drive bearing the disk pack is attached. The entry can be either 1 or 2, since 1311 disk drives can be attached to only channel 1 or channel 2.
For an unlabeled unit:		
3	ss	The two-character assignment symbol that is to be associated with the disk area defined in the next two parameters.
4	dmmmmmm	d—the alternate drive-code digit for the disk drive on which the disk pack is located. The digit is either 0, 2, 4, 6, or 8. mmmmmm—the six-digit starting sector address.
5	nnnnn	The low-order five digits of the ending sector address. This five-digit address is interpreted as though it were preceded by a zero.
For a labeled unit:		
3	ss	The two-character assignment symbol that is to be associated with the disk area defined by the next two parameters.
4	d	The alternate drive-code digit for the disk drive on which the disk pack is located. The digit is either 0, 2, 4, 6, or 8.
5	nn	The two-digit label number (00-18) that indicates the position of the label in the label track on the disk pack. The label must contain the sector address limits for the physical unit.

The pattern of operands 3, 4, and 5 is repeated throughout the remainder of the macro statement. Groups defining labeled and unlabeled physical units can be intermixed on the same card.

The coding in the example below defines the entire disk pack on drive 0 of channel 1 as an unlabeled physical unit. In addition, the macro statement defines six labeled physical units on the disk pack.

```
16      21
GEN07   1311,1,DA,0000000,19999,DB,0,00,
        DC,0,01,DD,0,02,DE,0,03,DF,0,04,
        DG,0,05
```

Monitor Definitions (GEN08)

The GEN08 macro statement is used to specify system information that affects the construction of the Monitor.

PARAMETER	CONTENTS	EXPLANATION
1	dcfltmwpra	d — *Data Processing System* 1 1410 7 7010 c — *Core-Storage Size* (highest address of the machine) 3 39999 5 59999 7 79999 9 99999 f — *SOF Residence* 0 Tape 9 Disk l — *System File Tape Labels* 0 No labels 1 Standard 80-character labels 2 Standard 120-character labels

NOTE: During System Generation for a tape-oriented system, a labeled source System Generator file cannot be used to produce an unlabeled output System Generator file.

t — *Tele-processing Supervisor*
- 0 Monitor does not include the Tele-processing Supervisor.
- 9 Monitor does include the Tele-processing Supervisor.

m — *Core Image File*
- 0 System does not include Core Image File.
- 9 System does include Core Image File.

w — *POW Program*
- 0 Not included
- 9 POW program included for Standard Print and/or Standard Punch Units, if those units are tape or if Variable Print and Variable Punch are chosen. If both units are Unit Record, or both units are omitted (specified as "none"), or either combination of Unit Record and "none" is specified the POW program cannot be included. (A description of the POW program is in *Operator's Guide,* Form C28-0351.)

p — *Standard Print Unit*
- 0 None
- 1 1403 Printer
- 2 Tape unit
- 3 Variable unit

NOTE: If Variable Print is chosen, then Variable Punch must also be chosen. (See "System File Sharing and Device Switching Feature" in the publication *System Monitor.*)

PARAMETER	CONTENTS	EXPLANATION
		r — *Standard Punch Unit* 0 None 1 Unit-record punch 2 Tape unit 3 Variable unit
		NOTE: If Variable Punch is chosen, then Variable Print must also be chosen. (See "System File Sharing and Device Switching Feature" in the publication *System Monitor.*)
		a — *Alternate Input Unit* 0 None 9 AIU capability is included.
2	nnnnn	*Tele-processing System; Area Reserved* nnnnn — Number of core-storage positions to be reserved permanently for TP programs. (If no area is reserved, this parameter is omitted.)
3	nn	*Lines-Per-Page* Number to be stored in Resident Monitor's Communication Region at /LIN/. A two-digit entry must be made whether or not the Standard Print Unit is specified. (00 is a valid entry.)
4	n or nn	*Console Input Area* This parameter specifies the number of core-storage positions to be reserved in the Resident Monitor as the console input area: 5-20. For Teleprocessing systems, the parameter 20 will be assigned automatically. If the File Organization System is used, a 20 must be specified.
5	jmt	*Control Card Recording* j — *JOB Card Punching* 0 JOB cards are *not* to be recorded on the Standard Punch Unit. 9 JOB cards *are* to be recorded on the Standard Punch Unit. m — *Monitor Control Cards — Standard Print Unit* 0 Monitor control cards, excluding the JOB card, are *not* to be recorded on the Standard Print Unit. 9 All Monitor control cards *are* to be recorded on the Standard Print Unit. t — *Monitor Control Cards-Console* 0 Monitor control cards are *not* to be recorded on the console printer. 9 All Monitor control cards *are* to be recorded on the console printer. NOTE: It is recommended that all Monitor control cards be recorded on the console printer so that diagnostic messages can be readily associated with the error conditions.
6-14		*Assignment Symbols (See Note)*
6	ss	System Operating file (required)
7	ss	Standard Input Unit (required)
8	ss	Alternate Input Unit (optional)
9	ss	System Library file (optional)
10	ss	Standard Print Unit (optional)
11	ss	Standard Punch Unit (optional)
12	ss	TP Library file (optional)
13	ss	Temporary Storage file (optional)
14	ss	Core Image file (optional)

NOTE: Parameters 10, 11, and 14 are classified as optional; however, if these system files are included, and if they are not assigned by this macro statement, ASGN cards for these files must precede the first JOB card during initialization of the system.

Parameters 8, 9, 12, and 13 are also classified as optional; these files, if included at the installation, may be assigned during initialization or any time prior to their use by the system. Furthermore, 12 and 13 must be assigned before the TP complex is opened.

PARAMETER	CONTENTS	EXPLANATION
15	SNAP	Use this parameter if the Snapshot capability is to be included in the Resident Monitor for unusual end of program. (Dependent program unusual-end-of-program situations will cause a Snapshot of all of core storage.) Otherwise, omit the parameter.
16	,	This parameter is reserved for system expansion. Currently it is to be omitted.
17	HALT	Use this parameter to cause a halt in the Resident Monitor Wait-Loop (/WAT/) routine.
18	camtttthh	This parameter is specified only if the File Organization System will be used. The parameter indicates the beginning track address of the File Organization System File Directory and Index area. "c" is the channel, "a" is access mechanism, "m" is the module, "tttt" is the track number, and "hh" is the home address.

If a continuation card for GEN08 is needed, columns 16-21 should be left blank.

Symbolic Unit Definitions

The number of reserve units, work units, and Teleprocessing units to be included in the Monitor's assignment tables are specified in three macro statements (GEN09, GEN10, and GEN11). Selection of these symbolic units depends, in part, upon the nature of the object programs to be executed. Autocoder programs can refer to all three types of symbolic units. COBOL programs can refer to work or reserve units. FORTRAN programs can refer to only work units. Thus, the user must ensure that symbolic units are provided for both general system functions and object-program functions. For example, if a FORTRAN object program is to address FORTRAN unit 4, MW1 (the equivalent symbolic work file — see *FORTRAN* publication) must be specified in the GEN10 macro statement.

Reserve Units (GEN09)

The GEN09 macro statement specifies the *number* of reserve units whose names are to be included in the Monitor's assignment tables. The names will be assigned to the reserve units sequentially, first numerically and then alphabetically. (That is MR0, MR1, . . . MR9, MRA, MRB, . . . MRZ.)

PARAMETER	CONTENTS	EXPLANATION
1	n or nn	*Number* of reserve units: 1-36. (Note that the number "7" makes available symbolic units and names MR0 through MR6, *not* MR7.)

NOTE: At least one reserve unit must be defined for subsequent use by System Generation.

Work Units (GEN10)

The GEN10 macro statement specifies the *number* of work units whose names are to be included in the Monitor's assignment tables. The names will be assigned to the work units sequentially, first numerically and then alphabetically. (That is, MW0, MW1, . . . MW9, MWA, MWB, . . . MWZ.)

PARAMETER	CONTENTS	EXPLANATION
1	n or nn	*Number* of work units: 1-36
2-37	ss, (etc.)	*Assignment Symbols:* Entries in parameters 2-37 are optional. If made, they serve the same functions as an ASGN card. Assignment symbols will be supplied to work units as follows: MW0 parameter 2 MW1 parameter 3 MW2 parameter 4 etc.

NOTE: At least one unit should be left unassigned for subsequent use by System Generation.

Tele-processing System Units (GEN11)

The GEN11 macro statement is used to specify the *number* of Tele-processing system units to be included in the Monitor's assignment tables. The names of these units will be assigned sequentially, first numerically and then alphabetically. (That is, MT0, MT1, . . . MT9, MTA, MTB, . . . MTZ.)

NOTE: This macro statement must always be made. For installations not including a TP system, the operand field must be blank.

PARAMETER	CONTENTS	EXPLANATION
1	n or nn	*Number* of Tele-processing system units: 1-36
2-37	ss, (etc.)	*Assignment Symbols:* Entries in parameters 2-37 are optional. If made, they serve the same functions as an ASGN card. Assignment symbols will be applied to the Tele-processing system units as follows: MT0 parameter 2 MT1 parameter 3 MT2 parameter 4 etc.

Tele-processing Directory Definitions (TPDIR)

The TPDIR macro statement is used by the TP Supervisor to reserve the appropriate amount of core storage for the TP Directory. This macro must be issued by the user at System Generation and is usually placed at the end of the macro packet. This statement is used only by installations including a TP system.

PARAMETER	CONTENTS	EXPLANATION
1	xxx	The total number of user programs resident in the TP Library.
2	yyy	The maximum number of TP programs the user will have in TP core storage at any one time.

Device Definitions for Resident IOCS (DEVDF)

The DEVDF macro statement defines the channel orientation of all input/output devices (except IBM 1301 and IBM 2302 Disk Storage units) included in the system. One macro statement must be included for each channel containing any of the devices indicated by parameters 2 through 8, below. The DSKDF macro statement must be used to indicate the channel orientation of IBM 1301 and 2302 Disk Storage units.

PARAMETER	CONTENTS	EXPLANATION
1	1, 2, 3, or 4	*Channel number* of devices described in this card (one macro per card). A separate macro statement is used for each channel.
2	729	*Tape Unit Type* If 729 magnetic tape units are the *only* type of tape unit attached to this channel.
	7330	If one or more of the tape units attached to this channel is an IBM 7330.
3	1402 or 1442	*Card Reader/Punch* If an IBM 1402 Card Read Punch or 1442 Card Reader is attached to this channel.
4	1403	*Printer* If an IBM 1403 Printer is attached to this channel.
5	1011	*Paper Tape Reader* If an IBM 1011 Paper Tape Reader is attached to this channel.
6	TP	*Tele-processing Devices* If an IBM 1009, IBM 1014, IBM 1050, IBM 7770, or a telegraph device is attached to this channel.
7	PTC	If a PTC unit is attached to this channel.
8	1, 2, 3, 4, or 5 (IO)	If present, this parameter indicates the number of IBM 1311 Disk Storage Drives attached to the channel. This parameter must not be used to provide information on IBM 1301 or IBM 2302 Disk Storage units.
	S1, S2, S3, S4, or S5	The letter S is used as a prefix to the number of drives to indicate that the scan disk special feature is being used.

The following statements would be used to describe a system that has 729 tape units, a 1402 Card Read Punch, and a 1403 Printer on channel 1, telegraph

devices and 7330 tape units on channel 2, and a mixture of 729 and 7330 tape units on channel 3:

```
          16      21
DEVDF 1,729,1402,1403
DEVDF 2,7330,,,,TP
DEVDF 3,7330
```

IBM 1301/2302 Disk Definitions for Resident IOCS (DSKDF)

The DSKDF macro statement is used to specify the number and channel orientation of the disk modules available to the system. (Another function of this macro is discussed under the explanation of parameters 3-21.) One statement is to be made for each channel to which disk modules are attached.

PARAMETER	CONTENTS	EXPLANATION
1	1, 2, 3, or 4	*Channel number* for modules on this card. NOTE: To obtain a shared-file IOCS generation, the channel number must have a prefix of the type of the generation desired (A, B, C, or D, explained under "Shared Disk Files"). For example, the channel entry for a channel 1 IOCS generation with no arm-sharing abilities would be A1.
2	00	*Access-Mechanism/Module* The entry in parameter must be for access mechanism 0, module 0.
3-21	am	The entries in parameters 3-21 may be in any order. The following should be considered in determining the order: during the execution of object programs, the IOCS will, for each channel, determine the availability of an access-mechanism/module combination before issuing a Seek Disk or any other disk input/output instruction. The order in which the availability is tested is the order in which the parameters appear in parameters 2-21. Thus, "00" is always tested first, next the combination in parameter 3, and so on.,

The following statements could be used for a system with four modules of disk storage on channel 2, and two modules on channel 3:

```
          16      21
DSKDF 2,00,01,02,03
DSKDF 3,00,01
```

IOCS Definitions (IOKDF)

The IOKDF macro statement is used to specify the inclusion of certain IOCS routines to meet the requirements of the system's dependent programs. This macro statement must immediately follow the DEVDF and DSKDF macro statements.

PARAMETER	CONTENTS	EXPLANATION
1	1410 or 7010	*Machine type*
2		*80-Character Tape Label Routines*
	A	No exits will be used by dependent programs.
	B	Exits A, D, G, and N, and return points /LRC/, /LRF/, /LRM/, and /LRR/ will be used by dependent programs. Reading, writing, and checking functions are not to be provided by the IOCS.
	C	All exits *except* C, F, J, L, and Q, and all return points *except* /LRB/, /LRE/, /LRH/, /LRK/, and /LRP/, will be used by dependent programs. Reading and writing, but *not* checking, functions are to be provided by the IOCS.
	D	All 80-character label routines are to be provided by the IOCS. If the Data File Generator is to produce a labeled file, the "D" parameter must be specified.
3	n	*120-Character Tape Label Routines* n is the letter A, B, C, or D, as specified for parameter 2. If operand of C is given, 120-character label is read – but the following tape mark is not spaced over. NOTE: If both 80-character and 120-character label routines are to be included in the IOCS, then parameters 2 and 3 must specify the same code letter.
	mn	m is omitted if only those label routines for 120-character tape labels are to be included in the IOCS. m is the number 1 if only those label routines for 100-character 1311 labels are to be included. m is the number 2 if label routines for both 120-character tape labels and 100-character 1311 disk labels are to be included. n is the letter A, B, C, or D, as specified for parameter 2.
4	4	*Error statistics* are to be accumulated by the IOCS.
5	5	*Service routines* will be included in dependent programs. That is, the DTF INTADDR entry will be used.
6	NSEQ	This parameter applies only to a system with IOCS defined for 1311 Disk Storage. It is used if *all* DTF entries in the programs being used have NSEQ as the first operand of FILEFORM. Use of this operand will result in a smaller Resident Monitor.
7	7	*Disk files* requiring specification of operands 2 and/or 3 of the DTF FILEFORM entry will be used by dependent programs.
8	8	*Write Disk Checks* are to be taken. That is the WDC operand will be used in the DTF ERRCHECK entry.
9	,	(This parameter is available for system expansion; currently, it is to be omitted.)

PARAMETER	CONTENTS	EXPLANATION
10	xxxxx	*Checkpoint functions* will be required by dependent programs. The third record of each checkpoint triplet is to begin at location xxxxx. (This address will be stored in the Resident Monitor's Communication Region at IOGR.) This address must be provided if the IOCS checkpoint facilities and/or the Storage Print utility program are to be used. (Refer to GEN02 and GEN08 macros.) It is recommended that location xxxxx be about 8,000 positions below the top of core storage.

Special Considerations for System File Labels

If the user specifies in the GEN08 macro statement that system files are to have tape labels, then parameter 2 or 3 must be specified in the IOKDF macro to provide the IOCS routines for those labels. Furthermore, only "A" or "D" may be used in those parameters.

NOTE: The Linkage Loader expects that the first eight characters of the phase name will be "LINKLOAD." Any two characters may follow, making the format "LINKLOADXX." If this format is not followed, the Linkage Loader will not build any symbol tables.

Random-Processing Disk Module Definitions (GENRM)

The GENRM macro statement defines the disk modules that are to be made available for random processing. (Continuation cards may be used for this macro statement, if necessary.)

PARAMETER	CONTENTS	EXPLANATION
1-40	ccm, ccm, (etc.)	"c" is the channel character of the appropriate x-control fields. (As shown, this must appear twice.) "m" is the identifying module number (0-9). NOTE: The GENRM macro may be compiled by a separate Autocoder run. The resultant relocatable module must be combined as part of a program and loaded through the SIU. It is recommended that IBRANDOM1, which results from GENRM, be placed in the Relocatable Library between the modules IBRANDOM and IBRANDOM2; however, it *may* be located wherever the user wishes.

System Generation Control Cards

This section contains descriptions of the control cards that are used to direct the System Generation process. The control cards for programs that are unique to the System Generation function are described completely. The control cards for programs that are used for data processing as well as for System Generation and that are, therefore, documented in other publications, are described in this publication solely from the viewpoint of System Generation.

Monitor Control Cards

In addition to the functions and entries described in the publication, *System Monitor,* the Monitor EXEQ card can have the following entries that are unique for System Generation:

1. In the EXEQ card for SG1 (MON$$ EXEQ SG1):

CARD COLUMN	CONTENTS	EXPLANATION
59	3, 5, 7, or 9	Indicates that the actual machine size being used for System Generation is other than that specified in the Monitor (at /AMS/) of the source file. This is intended primarily to specify, *for the initial System Generation,* that the machine has more than 40,000 positions. 3 – 40K 5 – 60K 7 – 80K 9 – 100K

2. In the EXEQ card for SG2 (MON$$ EXEQ SG2):

CARD COLUMN	CONTENTS	EXPLANATION
57	any character	Any character, except blank, indicates to SG2 *that* SG1 *only updated an alternate relocatable library* and that the printed output of SG2 is to consist solely of names of the relocatable library modules. If this column is blank, the SG2 printout will be a full listing of the SOF (or SGF) generated. (Italicized words above apply only to a tape-oriented system.)
58	any character	Largest possible records are to be built. If this column is blank, the blocking factor for absolute-format programs is 2,165. Note that any entry in this field, except blank, will override any specification given in the first PHASE card of a program. See the following description of the additional entries that can be made in the Linkage Loader PHASE card. This column is not used for a disk-oriented system.
59	3, 5, 7, or 9	This must be the same as that punched in column 59 of the EXEQ SG1 card described above.
60		Tape labels on the new SOF (applicable only to tape-oriented systems):
	blank	No labels
	1	80-character labels
	2	120-character labels
		NOTE: If tape labels are used, this EXEQ card must be immediately followed by a card specifying the information to be used in writing those labels: 1 6 80 1HDR (label information) The label information must conform to the IOCS standard label format. The field "File Identification" must contain IBMSYSTEMb. Refer to the publication, *Basic Input/Output Control System.* (For 120-character labels, SG2 adds a 40-position blank field to the 80 characters taken from the card.) This card is used only once: when changing to system file labels from a system that does not use file labels.

NOTE: The MODE SG Monitor control card must be included on the SIU if the Linkage Loader is to be executed during a System Generation run.

Linkage Loader Control Cards

In addition to the functions and entries described in the publication, *System Monitor,* the Linkage Loader PHASE card may have the following entries that are unique to System Generation:

CARD COLUMN	CONTENTS	EXPLANATION
61	1 or 3	This entry indicates that a directory is to be inserted at this point. If the entry is "1", the Major Phase Directory (Directory 1) is inserted. If the entry is "3", the Macro Library Directory (Directory 3) is inserted. NOTE: The one Directory 1 request permitted for a disk system is reserved for the Transitional Monitor.
62	M, R, or C	This entry indicates that the macro Library, a Relocatable Library, or the Create Library is to be inserted at this point. ("R" applies only to a tape-oriented system.)
63	any character	If this column is not blank, the absolute format records are "largest possible." If the column is blank, then the size is 2,165 characters per record. ("Largest possible" refers to tape-oriented systems only.)

SG Control Cards

The remainder of this section describes the control cards used to perform library maintenance functions with the SG1 and SG2 programs. These cards (hereafter termed *SG control cards*) are divided into four classes, in accordance with the type of library for which they are used. (Class I is an exception, in that the one card in this class applies to all three library types.)

In the following material the term SGFX refers to the file from which the System Generation is being performed — which can be the Master file, an SGF, or an SOF. The term SGFY refers to the new file being created by the System Generation — which can be either an SGF or an SOF.

Tables are provided at the end of this section to show the grouping of the SG control cards for presentation to SG1 and SG2, and to summarize the library maintenance functions and control card formats.

NOTE: *No SG control card may contain any punches in columns 1-5.*

Class I — The INCLD Card

This card directs the System Generation programs to copy an entire program or library from SGFX to SGFY.

```
16      21
INCLD   name
```

The INCLD card has two functions. The specific function performed is determined by the nature of the element named in the operand.

If *name* is the identifier of an *absolute format program* on the System Generation source file (SGFX), the INCLD card directs the System Generator to copy the program onto either the Job file for a tape system or the output unit for a disk system.

If *name* is the identifier of a Create or Relocatable Library on the SGFX, the INCLD card directs the System Generator to insert the library at this point on the SGFY. The library must have been previously referenced by a LOCAT card, and updated or copied. The placement of the Macro Library on the SGFY is contingent on the placement of the Autocoder processor. If the SGFY is disk-oriented, the Macro Library will be placed at the end of the absolute section.

For example, to simply copy Autocoder from the SGFX to the SGFY, the following card would be used:

```
16      21
INCLD   AUTOCODER
```

Class II Control Cards — Macro Library

Class II control cards pertain to all functions concerning the Macro Library.

LOCAT Control Card (Class II)

A LOCAT control card must be used to locate the Macro Library before a library maintenance function may be performed. This card must appear before any group of INSER, REPLC, or DELET control cards that pertain to the Macro Library.

Columns 1 through 5 of the macro cards must be punched and these cards must be in ascending order.

There are two forms of this card that pertain to the Macro Library:

```
16      21
LOCAT   M,AUTOCODER
16      21
LOCAT   M,MACROLIB
```

The first card is used to locate the Macro Library on a tape-oriented SGFX. The second card is used to locate the Macro Library on a disk-oriented SGFX.

INSER Control Card (Class II)

The INSER card directs the System Generator to perform maintenance on the total Macro Library or on some given macro.

Format 1

```
16      21
INSER   M
```

This format of the INSER card directs the System Generator to copy the entire Macro Library onto either MW1 for a tape system or the output unit for a disk system. This card must be preceded by the LOCAT card.

Format 2

```
6           16      21
alpha       INSER   M
```

This format of the INSER card directs the System Generator to copy to the end of the Macro Library and to insert the library element *alpha* at the end of the library. The new element must follow the INSER card in the SIU.

Format 3

```
6           16      21
name        INSER   M,aaaaa
```

This format of the INSER card directs the System Generator to insert new statements after the statement with sequence number *aaaaa* in macro *name*.

The new statements must follow the INSER card in the SIU. The statements of macro *name* are not resequenced.

REPLC Control Card (Class II)

Format 1

```
6           16      21
name        REPLC   M
```

This format of the REPLC card directs the System Generator to replace macro *name* with a new element

of the same name. The element must follow the REPLC card in the SIU.

Format 2

```
6           16      21
name        REPLC   M,aaaaa,bbbbb
```

This format of the REPLC card directs the System Generator to delete from macro *name* the statements with sequence numbers *aaaaa* through *bbbbb*, and to replace these with new statements. The new statements must follow the REPLC card in the SIU. The statements of macro *name* are not resequenced by the System Generator. To replace a single statement, *aaaaa* is equal to *bbbbb*.

The DELET Control Card (Class II)

Format 1

```
6           16      21
name        DELET   M
```

This format of the DELET card directs the System Generator to delete the element *name* from the Macro Library.

Format 2

```
6           16      21
name        DELET   M,aaaaa,bbbbb
```

This format of the DELET card directs the System Generator to delete statements *aaaaa* through *bbbbb* from macro *name*. To delete a single statement, *aaaaa* must equal *bbbbb*. No resequencing is performed by the System Generator.

Class III Control Cards — Create Library

The Class III control cards direct the System Generator to perform operations on the Create Library.

The Create Library is a collection of Linkage Loader control card packets. Each packet has a name by which it can be *called*. When it is called, normally through the CREAT control card, the System Generator extracts the named packet from the library and places its contents on MW2. MW2 must always be a tape unit, and the Linkage Loader must be informed that a Create packet has been selected. The user gives this information to the Linkage Loader via the INPUT control card.

LOCAT Control Card (Class III)

A LOCAT card must be used to locate the Create Library before the library maintenance functions may be performed. This card must appear before any group of INSER, REPLC, DELET, or GENER packets that pertain to the Create Library.

There is one form of the LOCAT control card as it pertains to the Create Library:

```
16      21
LOCAT   C,CREATLIB
```

INSER Control Card (Class III)

The INSER card directs the System Generator to perform maintenance functions on the total Create Library, or on some given Create packet.

Format 1

```
16      21
INSER   C
```

This format of the INSER card directs the System Generator to copy the entire Create Library onto either MW1 for a tape system or the output unit for a disk system. The Create Library must be located by a LOCAT card immediately preceding the INSER card.

Format 2

```
6           16      21
name        INSER   C
```

This format of the INSER card directs the System Generator to copy to the end of the Create Library, and to insert the library element identified by *name* at the end of the library.

GENER Control Card (Class III)

Each packet in the Create Library is identified by a header label of the format shown below:

```
16      21
GENER   name
```

name is the identifying name of the packet (maximum of 10 characters).

When format 2 of the INSER card or format 1 of the REPLC card is used, it must be followed by a GENER control card.

The GENER control card must, in turn, be followed by the packet of Linkage Loader control cards.

To use this packet as Linkage Loader input during a generation run, the user must use a CREAT card with the same name as was given on the GENER card.

REPLC Control Card (Class III)

Format 1

```
6           16      21
name        REPLC   C
```

This format of the REPLC card directs the System Generator to replace the Create packet *name* with a new packet having the same name. The REPLC card must be followed, in the SIU, by a GENER card, and then the packet.

DELET Control Card (Class III)

Format 1

```
6           16      21
name        DELET   C
```

This format of the DELET card directs the System Generator to delete the packet *name* from the Create Library.

CREAT Control Card (Class III)

The CREAT card directs SG1 to access the Create Library (CREATLIB) for Create packet *name*, to deblock the records of this packet into card-image records, and to transfer these card-image records to work file MW2, for later input to the Linkage Loader. The format is as follows:

```
16      21
CREAT   name
```

NOTE 1: MW2 must be a tape unit.

NOTE 2: Linkage Loader must be presented with an INPUT MW2 control card.

NOTE 3: See section, "Creation Charts," for a detailed list of all Create packets supplied by IBM.

NOTE 4: Linkage Loader control cards or object decks may be intermixed with CREAT control cards and will be placed on MW2 in the order in which they are received. This allows the user to merge his own programs into sequence with IBM programs. Other means are also provided for reordering an SGF once the programs have been placed on the file in absolute format. See "INCLD Control Card (Class I)."

Class IV Control Cards — Relocatable Library

Class IV control cards direct the System Generator to perform operations on a Relocatable Library.

LOCAT Control Card (Class IV)

The LOCAT card must be used to locate a particular library on the system file (SGF or SOF) before the library maintenance functions can be performed.

Format 1

```
16      21
LOCAT   R,name1
```

Referring to format 1, *name* identifies the library. *name* must be left-justified in the operand field, and can consist of a maximum of ten characters.

Format 2: The LOCAT card can also be used to change the name of a relocatable library:

```
6           16      21
name2       LOCAT   R,name1
```

name1 is the original name; *name2* is the new name.

ALTLB Control Card (Class IV)

The ALTLB card is used to locate the Relocatable Library currently assigned as the System Library file (LIB). This card performs the same functions for such Relocatable Libraries as does the LOCAT card for any type of library residing on the system file (SGF or SOF).

NOTE: If any Relocatable Library, except those residing on the SOF (or SGF), is to be maintained, that library must be assigned to symbolic unit LIB. *Furthermore, maintenance of this library is the only function that can be performed during this System Generation run.* Also, see discussion of column 57, EXEQ SG2 control card, under "Monitor Control Cards."

Format 1

```
16      21
ALTLB   xxxx
```

Referring to format 1, the operand *xxxx* specifies the type of physical unit assigned to LIB; this operand can be TAPE, 1301, or 2302.

ADD Control Card (Class IV)

The ADD card directs the System Generator to create header information for a new library. The ADD card must immediately precede, in the SIU, the records that constitute the new library.

```
16      21
ADD     R,name
```

name is the identifying name that the new library is to have (maximum of ten characters).

INSER Control Card (Class IV)

Format 1

```
16      21
INSER   R
```

This format of the INSER card directs the System Generator to copy an entire Relocatable Library onto either MW1 for a tape system or the output unit for a disk system. The library that is copied must be located by a LOCAT (or ALTLB) card immediately preceding the INSER card.

Format 2

```
6           16      21
name        INSER   R
```

This format of the INSER card directs the System Generator to copy to the end of the Relocatable Library being processed, and to insert the module (subprogram) *name* at the end of the library. The module can either follow the INSER card in the SIU or be on the Go file. If this format INSER card is not followed by the module (that is, if the next card in the SIU is another control card), the System Generator automatically searches the Go file for module *name*.

Format 3

```
6           16      21
name1       INSER   R,name2
```

This format of the INSER card directs the System Generator to insert module *name1* in front of module *name2*. If module *name1* does not follow the INSER card in the SIU, the Go file is searched. If more than one module (*from the* SIU) is to be inserted at this point, they may follow the module packet for *name1*, without additional INSER cards.

REPLC Control Card (Class IV)

Format 1

```
6               16      21
name            REPLC   R
```

This format of the REPLC card directs the System Generator to replace library module *name* with a new module having the same name. The module can either follow the REPLC card in the SIU or be on the Go file. If this format REPLC card is not followed by the module (that is, if the next card in the SIU is another control card), the System Generator automatically searches the Go file for the module.

Format 2

```
6               16      21
name1           REPLC   R,name2
```

This format of the REPLC card directs the System Generator to delete modules *name1* through *name2*, and to replace the deleted modules with a single module whose identifier is *name1*. Note that one or more modules can be deleted but only one new module with *name1* can be added. If the new module *name1* does not follow the INSER card in the SIU, the Go file is automatically searched.

DELET Control Card (Class IV)

Format 1

```
6               16      21
name            DELET   R
```

This format of the DELET card directs the System Generator to delete module *name* from the Relocatable Library.

Format 2

```
6               16      21
name1           DELET   R,name2
```

This format of the DELET card directs the System Generator to delete modules *name1* through *name2*.

Groups of Control Card Classes

The four classes of SG control cards must be presented to SG1 and/or SG2 in certain groups. The order and contents of these groups are determined, in part, by the orientation of the system file being used – whether it is tape- or disk-oriented. The table below defines the groups into which the various classes of SG control cards must be divided for proper control of the SG1 and SG2 programs.

	TAPE	DISK
SG1	Group 1 Classes II, III, IV	Group 1 Class III*
	Group 2 Classes I, III*	Group 2 None
SG2	Group 1 None	Group 1 Class I
	Group 2 None	Group 2 Classes II, III, IV**

* Of Class III cards, only the CREAT card may be used in this group. Linkage Loader control cards may be intermixed with the CREAT cards.

** The Class IV cards must be last in this group.

Each group must have the following card as its last card:

```
16
END
```

SUMMARY OF LIBRARY MAINTENANCE: FUNCTIONS AND CONTROL CARDS

Library Maintenance Function	Operation 16-20 LOCAT			Operation 16-20 ADD			Operation 16-20 INSER			Operation 16-20 REPLC			Operation 16-20 DELET			
	6-15 Label	21-72 Operand		6-15 Label	21-72 Operand		6-15 Label	21-72 Operand		6-15 Label	21-72 Operand		6-15 Label	21-72 Operand		
Add an entire library					1	4										
Delete an entire library	(Omission of control-card reference to a library causes its deletion.)															
Change name of a Relocatable Library	13	2	12													
Copy of a library (no change)		1	4					1								
Add an element to end of a library		1	4				5	1								
Add a module to middle of a library		2	4				5	2	6							
Replace element from SIU		1	4							5	1					
Replace module from Go File		2	4							5	2					
Delete a library element		1	4										5	1		
Delete consecutive modules		2	4										7	2	8	
Replace several modules with one from SIU		2	4							10	2	11				
Maintain external Relocatable Library	(Locate with ALTLB card. Maintain with SG cards as for library on System File.)															
Add statements to a macro		3	4				5	3	9							
Delete statement from a macro		3	4										5	3	10	11
Replace macro statements		3	4							5	3	10 11				

Key
1. M,R, or C (library type)
2. R only
3. M only
4. Library name
5. Element name
6. Name of module before which new module will be inserted
7. First module to be deleted
8. Last module to be deleted
9. Number of statement behind which new statements will be inserted
10. First element to be deleted or replaced
11. Last element to be deleted or replaced
12. Original name
13. New name

This section lists: (1) the assignment symbols that must be used by each user for his initial System Generation run, (2) the programs available on the Master file, and (3) the construction of the basic Resident Monitor. This section applies only to a tape-oriented system and need not be read by persons interested in a disk-oriented system.

Assignment Symbols for Initial Run

Arbitrary assignment symbols have been chosen for use in the Master file. Therefore, the first run made by each user *must* be made on the basis of these assignment symbols. For the initial run, MON$$ ASGN cards must be prepared. These cards assign physical units to those duties specified under "Basic Concepts — Tape-Oriented System."

The symbols available for assignment to the physical units for the initial System Generation run are listed as follows:

PHYSICAL UNIT	CHANNEL 1 ASSIGNMENT SYMBOLS	CHANNEL 2 ASSIGNMENT SYMBOLS
Card Reader	*R1	R2
Printer**	**P1	**P2
Punch	**X1	**X2
Tape (729 or 7330)	A0	B0
	A1	B1
	A2	B2
	A3	B3
	A4	B4
	A5	B5
	A6	B6

*R1 is assigned as the SIU, but the unit assigned as SIU can be changed from the console. A0 is assigned as the SOF, but the unit assigned as SOF can be changed from the console.

**The Variable Print and Punch routines are included but are not preassigned. They can be assigned to either unit-record or tape devices.

Programs Available

The programs available on the Master file for a tape-oriented system are:

IBBOOT	Bootstrap
IBRESMON	Resident Monitor, including IOCS
IBTRANSIT	Transitional Monitor
LINKLOAD	Linkage Loader
IBMLIBR	Relocatable Library
IBTRANSIT	Additional Copy
SG2	System Generation Program, Part 2
SG5	System Library Update
IBTRANSIT	Additional Copy
AUTOCODER	Processor and Macro Library
IBTRANSIT	Additional Copy
SG1	System Generation Program, Part 1
CREATLIB	Create Library
IBTRANSIT	Additional Copy
SORTDEFINE	Sort Definition
IBTRANSIT	Additional Copy
DEFINE	File Organization System Definition

Basic Resident Monitor

The basic Resident Monitor on the Master file has the following design.

System: 1410 System with 40,000 positions of core storage

With:
1. Five-position console input area
2. Console printing of all Monitor control cards
3. Two channel, tape and unit-record IOCS
4. Error statistics
5. Variable Print routine
6. Variable Punch routine
7. POW

Without:
1. Labeling
2. Tele-processing
3. Restart
4. Core Image file (MDM)
5. AIU routine
6. User-written service routines
7. Snapshot at unusual end of program

Symbolic units requiring assignment are:
MGO, MJB, MW1, MW2, MW3, and MR0.

SPR and SPU require assignment only if Print and Punch are wanted.

Control cards that could be used to generate a Master file are shown in Figure 18.

```
6         16   21
MON$$      DATE YRDAY
MON$$      ASGN SPR,A1
MON$$      JOB  CREATE TAPE MASTER FILE
MON$$      ASGN MW1,B1
MON$$      ASGN MW2,A2
MON$$      ASGN MW3,B3
MON$$      ASGN MJB,B3
MON$$      ASGN MGO,A6
MON$$      ASGN MRO,A6
MON$$      MODE GO,SG
MON$$      EXEQ AUTOCODER,,,NOFLG,NOPCH
           PST
           HEADRTAPE MASTER FILE
           GEN01P1,R1,X1,P2,R2,X2
           GEN02,1,A0,A1,A2,A3,A4,A5,A6
           GEN02,2,B0,B1,B2,B3,B4,B5,B6
           GEN081300009330,,55,5,099,A0,R1
           GEN091
           GEN104
           GEN11
           DEVDF1,7330,1402,1403
           DEVDF2,7330,1402,1403
           IOKDF1410,,,4
           END
MON$$      EXEQ SG1                                          9
           LOCATM,AUTOCODER
           INSERM
           LOCATC,CREATLIB
           INSERC
           LOCATR,IBMLIBR
           INSERR
           END
           CREATTMONITOR
           CREATTLINKLOAD
           PHASEIBMLIBR                                      R
           CREATTTRANSIT
           CREATTSYSGEN2
           CREATSG5TD
           CREATTTRANSIT
           CREATTAUTOCODE
           CREATTTRANSIT
           CREATTSYSGEN1
           PHASECREATLIB                                     C
           CREATTTRANSIT
           CREATTSRTDEFIN
           CREATTTRANSIT
           CREATDEFINE
           CREATTTRANSIT
           END
MON$$      EXEQ LINKLOAD
           INPUTMW2
MON$$      EXEQ SG2                                          9
MON$$      END  TAPE MASTER GENERATION
```

Figure 18. Control Cards Used to Generate a Master File for a Tape-Oriented System

This section lists: (1) the assignment symbols and disk addresses that must be used by each user for his initial System Generation run, (2) the programs available on the Master file, and (3) the construction of the basic Resident Monitor. This section applies only to a disk-oriented system and need not be read by persons interested in a tape-oriented system.

Assignment Symbols for Initial Run

Arbitrary assignment symbols have been chosen for use in the Master file. Therefore, the first run made by each user *must* be made on the basis of these assignment symbols. For the initial run, MON$$ ASGN cards must be prepared. These cards assign physical units to those duties specified under "Basic Concepts — Disk-Oriented System."

The symbols available for assignment to the physical units for the initial System Generation run are listed in Table 3.

Programs Available

The programs available on the Master file for a disk-oriented system are:

IBSGDL	System Generation Disk Load Program
IBBOOT	Bootstrap, Resident Monitor, and Transitional Monitor
LINKLOAD	Linkage Loader
AUTOCODER	Autocoder Language Processor
SG1	System Generation Program, Part 1
SG2	System Generation Program, Part 2
SG5	System Library Update Program
DSRTDEFINE	Disk Sort Definition Program
UTILITIES	Storage Print, Tape Print, Disk Print, 1301 Format/Address Generator, 2302 Format/Address Generator, 1311 Format/Address Generator, File Save, File Restore, and Data File Generator programs
DEFINE	File Organization System Definition Program
IBSGDL	Additional copy of System Generation Disk Load Program
MACROLIB	Macro Library
CREATLIB	Create Library
IBMLIBR	Relocatable Library

Table 3. Assignment Symbols and Addresses, Disk System

Physical Unit	Channel 1 Assignment Symbols	Channel 2 Assignment Symbols	Cylinders	AM	Start Track	End Track	HR	Note
Card Reader	*R1	R2						
Printer	**P1	**P2						
Punch	**X1	**X2						
Tape (729 or 7330)	A0	B0						
	A1	B1						
	A2	B2						
	A3	B3						
Disk (see Note 1)	*E1	G1	20	00	0000	0799	00	2, 7
	E2	G2	40	00	0800	2399	00	3, 7
	E3	G3	25	00	2400	3399	00	4
	E4	G4	20	00	3400	4199	00	5
	E5	G5	15	00	4200	4799	00	6
	E6	G6	15	00	4800	5399	00	6
	E7	G7	10	00	5400	5799	00	6

* R1 is assigned on the SIU, but the unit assigned as SIU can be changed from the console.
E1 is assigned on the SOF, but the unit assigned as SOF can be changed from the console.

** The Standard Print and Punch variable routines are included but are not preassigned. They can be assigned to either unit-record or tape devices.

NOTES:

1. Disk must be formatted for 150 cylinders. Format is Load mode with the record address equal to the track address and an HA identifier of 00. Address format: AMTTTTHA, as explained under "Organization of Data Files on Disk Storage."
2. Assign area to Master file by means of console if channel 2 is used.
3. Assign area E2 or G2 to Relocatable Library (LIB) by means of ASGN card.
4. Assign area to Job file by means of ASGN card.
5. Assign area to Go file by means of ASGN card.
6. Assign Work files MW1, MW2, and MW3 by means of ASGN cards.
7. When loading the operating section of the Master file onto disk, begin loading at module 0, track 0000. The Relocatable Library begins on module 0, track 0800. These areas correspond to E1 or G1 and E2 or G2.

Basic Resident Monitor

The basic Resident Monitor on the Master file has the following design.

System: 1410 Data Processing System with 60,000 positions of core storage

With:
1. Five-position console input area
2. Console printing of all Monitor control cards
3. Two channel, tape, disk, and unit-record IOCS
4. Error statistics
5. Write disk check
6. Variable Print routine
7. Variable Punch routine
8. POW

Without:
1. Labeling
2. Tele-processing
3. Restart
4. Core Image file (MDM)
5. AIU routine
6. User-written service routines
7. Snapshot at unusual end of program

Symbolic units requiring assignment are:
MGO, MJB, MW1, MW2, and MW3.
SPR and SPU require assignment only if Print and Punch are wanted.

Control cards used to generate the Master file are shown in Figure 19.

```
     6         16   21
*** INSERT BOOTSTRAP CARD ***
     MON$$      DATE YRDAY
     MON$$      ASGN SPR,A1
     MON$$      JOB  CREATE DISK MASTER FILE
     MON$$      ASGN LIB,E2
     MON$$      ASGN MJB,E3
     MON$$      ASGN MGO,E4
     MON$$      ASGN MW1,E5
     MON$$      ASGN MW2,E6
     MON$$      ASGN MW3,E3
     MON$$      MODE GO,SG
     MON$$      EXEQ AUTOCODER,,,NOFLG,NOPCH
                HEADR DISK MASTER FILE VER. 4
                GEN01P1,R1,X1,P2,R2,X2
                GEN02,1,A0,A1,A2,A3
                GEN02,2,B0,B1,B2,B3
                GEN03E1,00000000,0799,E2,00080000,2399,E3,00240000,3399,
                     E4,00340000,4199,E5,00420000,4799,E6,00480000,5399,
                     E7,00540000,5799
                GEN04G1,00000000,0799,G2,00080000,2399,G3,00240000,3399,
                     G4,00340000,4199,G5,00420000,4799,G6,00480000,5399,
                     G7,00540000,5799
                GEN081590009330,,55,5,009,E1,R1
                GEN09
                GEN104
                GEN11
                DEVDF1,7330,1402,1403
                DEVDF2,7330,1402,1403
                DSKDF1,00
                DSKDF2,00
                IOKDF1410,,,4,,,,8
                END
     MON$$      ASGN MW2,A2
     MON$$      EXEQ SG1                                        9
                CREATDMONITOR
                CREATDLINKLOAD
                CREATDAUTOCODE
                CREATDSYSGEN1
                CREATDSYSGEN2
                CREATSG5TD
                CREATDSRTDEFIN
                CREATUTILITIES
                CREATDEFINE
                CREATIBSGDL
                END
     MON$$      EXEQ LINKLOAD
                INPUTMW2
     MON$$      EXEQ SG2                                        9
                LOCATM,MACROLIB
                INSERM
                LOCATC,CREATLIB
                INSERC
                LOCATR,IBMLIBR
                INSERR
                END
     MON$$      END
```

Figure 19. Control Cards Used to Generate a Master File for a Disk-Oriented System

Contents of the Libraries

This section lists the contents of the three libraries — Macro, Relocatable, and Create — as they are distributed on the Master file.

Macro Library Contents

The following Macro Library is contained on both the tape- and disk-oriented Master files. On a tape-oriented Master, its name is AUTOCODER. On a disk-oriented Master, its name is MACROLIB.

SEQUENCE	NAME	SEQUENCE	NAME
1	GET	15	GEN08
2	IOCTL	16	GEN09
3	UNCTL	17	GEN10
4	DTF	18	GEN11
5	STDIO	19	DEVDF
6	MONOP	20	DSKDF
7	SYSIO	21	IOKDF
8	GEN01	22	GENRM
9	GEN02	23	DUMP
10	GEN03	24	ENDLD
11	GEN04	25	LDPTC
12	GEN05	26	TPDIR
13	GEN06	27	SPLDF
14	GEN07		

The user should refer to the section, "System Generation Control Cards," before attempting to perform any maintenance function on this library. The Class II control cards describe the operations that may be performed.

It is also recommended that if the user is not going to use an SGF or SOF for regeneration functions, he should delete the following macros from this library:

GEN01	GEN06	GEN11
GEN02	GEN07	DEVDF
GEN03	GEN08	DSKDF
GEN04	GEN09	IOKDF
GEN05	GEN10	GENRM
		SPLDF

For information concerning the use of the above macros in generating a system, the reader should refer to the section, "System Description Control Cards."

Relocatable Library Contents

The following is a list of all the relocatable subprograms (modules) contained in the Relocatable Library (IBMLIBR) of both the tape- and disk-oriented Master files. The modules are listed below in the order in which they are sequenced in the Relocatable Library. Refer to the section, "System Generation Control Cards," for information concerning operations on this library.

File Organization System Modules

IBFOSCTL1
IBFOSCTL2
IBFOSLOAD0
IBFOSLOAD1
IBFOSLOAD2
IBFOSADD
IBFOSADD2
IBFOSUNLOD
IBFOSOOF
IBFOSCOF
IBFOSDG
IBFOSSG

File Organization System Definition Module

IBFOSYSDEF

Utility Program Module

SNAPSHOT (If specified, generated as a part of the System Monitor or as part of a dependent program.)

Tape Sort Program Modules

IBSRTCOMAN
IBSRTPRIME
IBSRTCTLCD
IBSRTGASSR
IBSRTGASM3
IBSRTDUM00
IBSRTEQUAL
IBSRTIO101
IBSRTIO102
IBSRTIO104
IBSRTIO105
IBSRTREPLT
IBSRTREPLQ
IBSRTIO103
IBSRTIO106
IBSRTP1ASN
IBSRTDUM01
IBSRTEQASN (Duplicate)
IBSRTIO109
IBSRTIO110
IBSRTIO107
IBSRTIO108
IBSRTIO203
IBSRTIO201
IBSRTMNTS2
IBSRTMNTM2
IBSRTRPPH2
IBSRTIO205
IBSRTIO206
IBSRTDUM02
IBSRTAMRG2
IBSRTIO204
IBSRTIO202
IBSRTIO314
IBSRTIO301
IBSRTIO302
IBSRTIO305
IBSRTIO306
IBSRTIO399

IBSRTMNTM3
IBSRTMNTS3
IBSRTRMRG3
IBSRTLKAD3
IBSRTIO303
IBSRTIO304
IBSRTSQTG3
IBSRTDUM03
IBSRTEQASN (Duplicate)
IBSRTSUPH3
IBSRTAMRG3
IBSRTIO307
IBSRTIO308
IBSRTIO310
IBSRTIO311
IBSRTIO312
IBSRTIO309

Disk Sort Program Modules

IBDSRTCOMN
IBDSRTPTTP
IBDSRTPRIM
IBDSRTGA01
IBDSRTGA02
IBDSRTGADM
IBDSRTEQAL
IBDSRTRPP1
IBDSRTOCF1
IBDSRTMCF1
IBDSRTIOJ1
IBDSRTIOK1
IBDSRTIOL1
IBDSRTIOM1
IBDSRTAP21
IBDSRTDUM1
IBDSRTEQAS
IBDSRTAP11
IBDSRTIOA1
IBDSRTIOC1
IBDSRTIOE1
IBDSRTIOB1
IBDSRTIOD1
IBDSRTIOF1
IBDSRTOCF2
IBDSRTMCF2
IBDSRTRPP2
IBDSRTAP12
IBDSRTOCF3
IBDSRTMCF3
IBDSRTRP13
IBDSRTRP23
IBDSRTRP33
IBDSRTRP43
IBDSRTRP53
IBDSRTRP63
IBDSRTRP73
IBDSRTRP83
IBDSRTRP93
IBDSRTIOR1
IBDSRTHS13
IBDSRTDUM3
IBDSRTAP13
IBDSRTAP23
IBDSRTAP33
IBDSRTAP43
IBDSRTAP53

CHAIN Object-Time Modules

CHAIN
RETURN

COBOL Object-Time Modules

IBCOBOL
IBCBLADOVR
IBCBLDSPLY
IBCBLCMPAR
IBCBLFLDMP
IBCBLALTST
IBCBLSUBSC
IBCBLACCPT
IBCBLEXPON
IBCBLRDINT
IBCBLDVZER
IBCBLCLEAR

FORTRAN Object-Time Modules

IBINTRP (Programmed interpretations, floating-point)
OVERFL, DVCHK, IBINTRP } (Machine interpretations, floating-point)
IBCOMMON
IBLABEL
IBFOERR
IBINDX1
IBINDX2
IBINDX3
IBEXPF1
IBEXPFF
ALOG
EXP
EXIT
AMAX0
AMIN0
FLOAT
MAX1
MIN1
INT
IFIX
IBEXPII
IBBACKSP
IBREWIND
IBENDFILE
SQRT
ABS
IABS
AMAX1
MAX0
AMIN1
MIN0
COS
SIN
AMOD
AINT
SIGN
ISIGN
MOD
DIM
IDIM
ATAN
SLITE
SLITET

Random-Processing Scheduler Modules

IBRANDOM
IBRANDOM1 (Should be generated and placed here)
IBRANDOM2
IBRANDOM3
IBRANDOM4
IBRANDOM5
IBRANDOM6

Miscellaneous

IBLOOKM

1311 IOCS Modules

IBCYLOFLO
IBSCAN1311

Resident Monitor Modules

IBMVERSION
IBZRRTP
IBBSPTP
IBSIMTP
IBABTPM
IBABDKM
IBRDSIU
IBPRTUR
IBPRTTP
IBPRTVAR
IBPRTNONE
IBPCHUR
IBPCHTP
IBPCHVAR
IBPCHNONE
IBPPCOMMON
IBREADAIU
IBIOARM
IBAINQUIRY
IBZRRDK
IBSIMDK

Tele-processing Supervisor Modules

TPPTCCH1
TPPTCCH2
TPSTARTCH1
TP1050CH10
TP1050CH11
TP7770CH1
TP1009CH1
TP1014CH10
TP1014CH11
TPTELCH10
TPTELCH11
TPTELCH12
TPENDCH1
TPSTARTCH2
TP1050CH20
TP1050CH21
TP7770CH2
TP1009CH2
TP1014CH20
TP1014CH21
TPTELCH20
TPTELCH21
TPTELCH22
TPENDCH2
TPSUPER
TPSUPERDR
TPSUPERTPO
TPSUPERDDR
TPBASSUPER
TPTAPEDUMP
TPDISKDUMP
TPONLY
TPTAPELDRA
TPTAPELDRR
TPDISKLDRA
TPDISKLDRR
TPLDRRPROC
TPLDRDEP

Transitional Monitor Modules

IBREADMOCC
IBSCANM
IBEXEQM
IBIOATM
IBIOATMVAR
IBSEARCHT
IBACCOUNT
IBPOWTRAN
IBSEARCHD
IBSPLNITER

Sort Definition Program Module

IBSRTDEFIN
IBDSRTDEF

Linkage Loader Modules

IBLNKPROC
IBLNKGOTAP
IBLNKINTAP
IBLNKOUTAP
IBLNKGODSK
IBLNKINDSK
IBLNKOUDSK
IBCOUPLE

Miscellaneous

IBUPPER

Autocoder Compiler Modules

IBAU10COMM
IBAU10INPT
IBAU10TPE1
IBAU10TPE2
IBAU10IOTB
IBAU20GENR
IBAU20TPE1
IBAU20TPE2
IBAU30ASGN
IBAU30SCAN
IBAU30TPE1
IBAU30SUBR
IBAU33SUBR
IBAU33TPE1
IBAU33RCUR
IBAU40OTPT

Go Modules for Compilers

IBTOCGM
IBTPCGM
IBTCCGM
IBTNCGM
IBDOCGM
IBDPCGM
IBDCCGM
IBDNCGM

Autocoder Compiler Modules (continued)

IBAU40TPE1
IBAU50TPE1
IBAU50CREF
IBAU10DSK1
IBAU10DSK2
IBAU10DSK3
IBAU20DSK1
IBAU20DSK2
IBAU20DSK3
IBAU30DSK1
IBAU33DSK1
IBAU40DSK1
IBAU50DSK1

COBOL Compiler Modules

IBCBLCSP01
IBCBLCSP09
IBCBLCSP02
IBCBLCSP03
IBCBLP0MF1
IBCBLCST04
IBCBLCST05
IBCBLP1MF1
IBCBLP1MF2
IBCBLCST06
IBCBLP1MF3
IBCBLCST07
IBCBLP2MF1
IBCBLCSP08
IBCBLP2MF2
IBCBLP2MF3
IBCBLP2MF4
IBCBLP3MF1
IBCBLP3T01
IBCBLP4MF1
IBCBLP5MF1
IBCBLCSD04
IBCBLCSD05
IBCBLCSD06
IBCBLCSD07
IBCBLP3D01

FORTRAN Compiler Modules

IBFTNCMN
IBFTN05TO
IBFTN05
IBFTN10TO
IBFTN10TI
IBFTN10
IBFTN20TO
IBFTN20TI
IBFTN20
IBFTN25TI
IBFTN25
IBFTN05DO
IBFTN10DO
IBFTN10DI
IBFTN20DO
IBFTN20DI
IBFTN25DI

Utility Program Modules

IBUTILITY
IBUTILSCAN
IBTAPEDUMP
IBDISKDUMP
IBCOREDCTL
IBCOREDUMP
IB01FAGEN
IB11ADRGEN
IB1311LBL1
IB1311LBL2
IBADDRESR
IBFILESAVE
IBFILEREST
IB02FAGEN
IBFILEGEN

Loader Modules for PTC Programs

TPLDDCP1
TPLDDCP2

System Generator Modules

IBSYSGEN1
IBSYSGEN2
IBDSYSGEN1
IBDSYSGEN2
IBDSYSGEN3
IBSGLDLDR

Tape-to-Disk SOF Load Modules

SGDLBOOT
IBDLIO
IBDLIOA
IBDLIOB
IBDLIOC
IBDLIOD
IBSGDLDR

SG4 and SG5 Program Modules

IBSG4
IBSG5
IBSG5D
IBSG5T
IBSG5E

Macro Print and Punch Modules

IBPRINTMT
IBPRINTMD
IBPRINTM

TP Library Generator Modules

TPATLIBGEN
TPADLIBGEN
TPLIBGENXT
TPLIBGENXD
TPLIBGENXP

Create Library Contents

The following Create Library is contained on both the tape- and disk-oriented Master files. Additional Create packets are documented in the following section of tables, but they are not provided as part of the Create Library. The name of the library is CREATLIB.

A "T" or "D" prefix on the name of a Create packet refers to an exclusively tape-oriented or disk-oriented packet. Where there is no prefix, the same package applies for both tape and disk.

TMONITOR
Includes IBBOOT, IBRESMON, and IBTRANSIT for tape system.
(No provision made for Tele-processing Supervisor.)

RESTART
The CREATRESTART card, if used, must immediately follow the CREATTMONITOR or CREATDMONITOR card.

TSRTDEFIN

TLINKLOAD

SYSGEN3

TAUTOCODE

TCOBOL

TFORTRAN

UTILITIES
Includes Storage Print, Tape Print, Disk Print (1301, 2302, 1311), 1301 Format/Address Generator, 2302 Format/Address Generator, 1311 Format/Address Generator, File Save (1301/2302), File Restore (1301/2302), and Data File Generator (Tape, 1301, 2302) Utility Programs.

TSYSGEN1
TSYSGEN2
TMACROPRT
DMONITOR
Includes IBSGDL and IBBOOT for a disk system. (Resident and Transitional Monitor are part of IBBOOT. No provision made for Tele-processing Supervisor.)
DLINKLOAD
DAUTOCODE
DCOBOL
DFORTRAN
DSYSGEN1
DSYSGEN2
DMACROPRT
DSKLIBLDR
To place a Relocatable Library on disk.
TSYSTEM
DSYSTEM
LINKLOADTD
LINKLOADDT
TMONTP1
TMONTP2
DMONTP1
DMONTP2
IBSGDL
TTRANSIT
LINKLOADRD
LINKLOADRT
TCLINKLOAD
DCLINKLOAD
DSRTDEFIN
LABEL1311
SG4TD
SG5TD
DEFINE

NOTE: The Linkage Loader expects that the first eight characters of the phase name will be "LINKLOAD." Any two characters may follow, making the format "LINKLOADXX." If this format is not followed, the Linkage Loader will not build any symbol tables.

The following charts show the Linkage Loader control cards that can be used to construct the IBM programs available within the system.

These charts show some of the permissible configurations of the programs. They also indicate those configurations that will be constructed by specific Create packets.

NOTE: Many of the modules contain imbedded calls. Because of this, a specific program may require modules not listed on the creation charts.

Use of Creation Charts

The following example illustrates the use of these charts. Refer to the Linkage Loader chart, which shows that a total of eight possible configurations of the Linkage Loader can be generated. The Go file, the SOF (or SGF, during System Generation) and the library can each be on either tape or disk, giving a total of eight combinations. The user makes his selection from the possibilities given at the top of the table. For example, if all files are to be on tape, the first column is the appropriate one. The user then has the choice of calling Create packet TLINKLOAD or punching the appropriate cards as indicated at the lower portion of the table.

Where a Create packet name is given for a selected configuration, the lower half of the table shows the exact contents of this package. If there is no name entered and if the appropriate configuration is desired, the user must supply the cards indicated (in the order shown).

LINKAGE LOADER											
Go File on	Tape	X	X	X	X						
	Disk					X	X	X	X		
SOF on	Tape	X	X			X	X				
	Disk			X	X			X	X		
LIB on	Tape	X		X		X		X			
	Disk		X		X		X		X		
Create Packet Name		TLINKLOAD							DLINKLOAD	TCLINKLOAD	DCLINKLOAD
16	21										
PHASE	LINKLOAD	X	X	X	X	X	X	X	X	X	X
CALL	IBLNKPROC	X	X	X	X	X	X	X	X	X	X
CALL	IBLNKGOTAP	X	X	X	X					X	
CALL	IBLNKGODSK					X	X	X	X		X
CALL	IBLNKINTAP	X		X		X		X		X	
CALL	IBLNKINDSK		X		X		X		X		X
CALLN	IBLNKOUTAP	X	X			X	X			X	
CALLN	IBLNKOUDSK			X	X			X	X		X
CALL	IBCOUPLE									X	X

NOTE: Create packets TCLINKLOAD and DCLINKLOAD are for chained programs.

Monitor Modules in Relocatable Library

REQUIRED	REQUIRED: TAPE ONLY	REQUIRED: DISK ONLY
IBACCOUNT	IBBSPTP	IBDCCGM
IBAINQUIRY	IBSEARCHT	IBDNCGM
IBEXEQM	IBSIMTP	IBDOCGM
IBIOARM	IBTCCGM	IBDPCGM
IBPPCOMMON	IBTNCGM	IBSEARCHD
IBRDSIU	IBTOCGM	IBSIMDK
IBREADMOCC	IBTPCGM	IBZRRDK
IBSCANM	IBZRRTP	IBABDKM
IBMVERSION	IBABTPM	

CONDITIONAL	
IBIOATM	(Transitional Monitor Input/Output Assignment)
IBIOATMVAR	(Transitional Monitor Input/Output Assignment Variable)
IBPCHNONE	(No Standard Punch Unit)
IBPCHTP	(SPU is tape)
IBPCHUR	(SPU is 1402 Card Read Punch)
IBPCHVAR	(Variable Punch)
IBPRTNONE	(No Standard Print Unit)
IBPRTTP	(SPR is tape)
IBPRTUR	(SPR is 1403 Printer)
IBPRTVAR	(Variable Print)
IBLOOKM	(Required by Utility programs)
IBREADAIU	(System includes Alternate Input Unit)
IBPOWTRAN	(POW required for tape SPR and/or SPU)
SNAPSHOT	(Required for Snapshot capability)
IBSPLNITER	(Required for SPOOL capability)

SYSTEM MONITOR					
SOF on	Tape		X		
	Disk			X	
Create Packet Name			TMONITOR	DMONITOR	TTRANSIT
	16	21			
	PHASE	IBSGDL		X	
**	CALL	SGDLBOOT		X	
	PHASE			X	
**	CALL	IBDLIO		X	
**	CALLN	IBSGDLDR		X	
	PHASE	IBBOOT	X	X	
*	CALL	IBBOOT1T	X		
*	CALL	IBBOOT2D		X	
	PHASE		X	X	
*	CALL	IBBOOT2T	X		
	PHASE	IBRESMON	X		
	PRTCT	00000	X	X	
*	CALLN	IBRESIOCS	X	X	
*	CALLN	IBRESIDENT	X	X	
*	CALLN	IBMENDM	X	X	
	PHASE			X	
	PHASE	IBTRANSIT	X		X
*	CALLN	IBTRANSIT	X	X	
		61			
***	PHASE	1	X	X	X
	DISGO		X	X	
	PRTCT		X	X	

* These modules are produced by the System Generation macros.
** This module is contained in the Relocatable Library.
*** To insert Directory 1.

RESTART PROGRAM *			
Create Packet Name			RESTART
	16	21	
	CONGO		X
	PRTCT	00000	X
	PHASE	RESTART	X
**	CALL	IBRSTMOD1	X
	PHASE		X
**	CALL	IBRSTMOD2	X
	PHASE		X
**	CALLN	IBRSTMOD3	X
	DISGO		X
	PRTCT		X

* If used, the CREATRESTART card must immediately follow the CREATTMONITOR or CREATDMONITOR card.
** This module is generated with the Resident IOCS.

MONITOR (For Tele-Processing System)					
SOF On	Tape	X	X		
	Disk			X	X
Create Packet Name		TMONTP1	TMONTP2	DMONTP1	DMONTP2
16 21					
PHASE	IBSGDL			X	
CALL	SGDLBOOT			X	
PHASE				X	
CALL	IBDLIO			X	
CALLN	IBSGDLDR			X	
PHASE	IBBOOT	X		X	
CALL	IBBOOT1T	X			
CALL	IBBOOT2D			X	
PHASE		X		X	
CALL	IBBOOT2T	X			
PHASE	IBRESMON	X			
PRTCT	00000	X		X	
CALLN	IBRESIOCS	X		X	
CALLN	IBRESIDENT		X		X
CALLN	IBRESIDEN2		X		X
CALLN	IBMENDM		X		X
PHASE					X
PHASE	IBTRANSIT		X		
CALLN	IBTRANSIT		X		X
61					
PHASE	1		X		X
DISGO			X		X
PRTCT			X		X

AUXILIARY LINKAGE LOADERS*							
		DISK TP LIBRARY			TAPE TP DISK		
SOF on Tape		X		X		X	
SOF on Disk			X		X		X
Relocatable Library and Go File on Tape		X		X		X	
Relocatable Library and Go File on Disk			X		X		X
Output on Tape					X	X	X
Output on Disk		X	X	X			
Create Packet Name		LINKLOADTD	LINKLOADRD		LINKLOADDT	LINKLOADRT	
16	21						
PHASE	LINKLOADTD	X					
PHASE	LINKLOADDT				X		
PHASE	LINKLOADRT					X	X
PHASE	LINKLOADRD		X	X			
CALL	IBLNKPROC	X	X	X	X	X	X
CALL	IBLNKGOTAP	X		X		X	
CALL	IBLNKGODSK		X		X		X
CALL	IBLNKINTAP	X		X		X	
CALL	IBLNKINDSK		X		X		X
CALLN	IBLNKOUTAP				X		
CALLN	IBLNKOUDSK	X					
CALLN	TPLIBGENXT					X	X
CALLN	TPLIBGENXD		X	X			

*LINKLOADTD and LINKLOADDT are for use in Tele-processing systems that store the TP Library file in a storage medium different from that used for the SOF and Job file (disk TP library in a tape-oriented system, or tape TP library in a disk-oriented system). The remaining four configurations are the one-pass TP Relocatable Library generators.

COBOL						
Go File on	Tape		X	X		
	Disk				X	X
Work Files on	Tape		X		X	
	Disk			X		X
Create Packet Name			TCOBOL			DCOBOL
6	16	21				
001	PHASE	COBOL	X	X	X	X
	CALL	IBTNCGM	X	X		
	CALL	IBDNCGM			X	X
	CALLN	IBCBLCSP01	X	X	X	X
	CALL	IBCBLCSP09	X	X	X	X
	CALLN	IBCBLCSP02	X	X	X	X
	CALL	IBCBLCSP03	X	X	X	X
	CALLN	IBTOCGM	X	X		
	CALLN	IBDOCGM			X	X
	CALL	IBCBLP0MF1	X	X	X	X
010	PHASE		X	X	X	X
	BASE1	IBTOCGM	X	X		
	BASE1	IBDOCGM			X	X
	CALL	IBTPCGM	X	X		
	CALL	IBDPCGM			X	X
	CALLN	IBCBLCST04	X		X	
	CALLN	IBCBLCSD04		X		X
	CALL	IBCBLCST05	X		X	
	CALL	IBCBLCSD05		X		X
	CALLN	IBCBLP1MF1	X	X	X	X
015	PHASE		X	X	X	X
	PRTCT	IBCBLP1MF1	X	X	X	X
	BASE1	IBCBLP1MF1	X	X	X	X
	CALL	IBCBLP1MF2	X	X	X	X
020	PHASE		X	X	X	X
	BASE1	IBCBLP1MF2	X	X	X	X
	CALL	IBCBLCST06	X		X	
	CALL	IBCBLCSD06		X		X
	CALLN	IBCBLP1MF3	X	X	X	X
025	PHASE		X	X	X	X
	PRTCT		X	X	X	X
	BASE1	IBCBLCST04	X		X	
	BASE1	IBCBLCSD04		X		X
	CALL	IBCBLCST07	X		X	
	CALL	IBCBLCSD07		X		X
	CALLN	IBCBLP2MF1	X	X	X	X
030	PHASE		X	X	X	X
	BASE1	IBCBLCSP02	X	X	X	X
	CALL	IBCBLCST04	X		X	
	CALL	IBCBLCSD04		X		X
	CALLN	IBCBLCST06	X		X	
	CALLN	IBCBLCSD06		X		X
	CALL	IBCBLCST07	X		X	
	CALL	IBCBLCSD07		X		X
	CALLN	IBCBLCSP08	X	X	X	X
035	PHASE		X	X	X	X
	CALL	IBCBLP2MF2	X	X	X	X
040	PHASE		X	X	X	X
	BASE1	IBCBLP2MF2	X	X	X	X
	CALL	IBCBLP2MF3	X	X	X	X
045	PHASE		X	X	X	X
	BASE1	IBCBLP2MF3	X	X	X	X
	CALL	IBCBLP2MF4	X	X	X	X
050	PHASE		X	X	X	X
	BASE1	OLEE/	X	X	X	X
	CALL	IBTPCGM	X	X		
	CALL	IBDPCGM			X	X
	CALLN	IBCBLP3MF1	X	X	X	X
	CALL	IBCBLP3T01	X		X	
	CALL	IBCBLP3D01		X		X
055	PHASE		X	X	X	X
	BASE1	IBCBLP3MF1	X	X	X	X
	CALL	IBCBLCSP03	X	X	X	X
	CALLN	IBCBLCST07	X		X	
	CALLN	IBCBLCSD07		X		X
	CALL	IBCBLCSP08	X	X	X	X
	CALLN	IBTCCGM	X	X		
	CALLN	IBDCCGM			X	X
	CALL	IBCBLP4MF1	X	X	X	X
060	PHASE		X	X	X	X
	CALL	IBCBLP5MF1	X	X	X	X

AUTOCODER						
Work Files and Go Files on	Tape		X	X		
	Disk				X	X
Processor Resides on	Tape		X		X	
	Disk			X		X
Create Packet Name			TAUTOCODE			DAUTOCODE
6	16	21				
001	PHASE	AUTOCODER	X	X	X	X
	CALL	IBAU10COMM	X	X	X	X
	CALLN	IBAU10INPT	X	X	X	X
	CALL	IBAU10TPE1	X	X		
	CALL	IBAU10TPE2	X			
	CALL	IBAU10DSK1			X	X
	CALL	IBAU10DSK2		X		X
	CALL	IBAU10DSK3			X	
	CALL	IBAU10IOTB	X	X	X	X
		61				
* 010	PHASE	3	X	X	X	X
		62				
** 015	PHASE	M	X		X	
020	PHASE		X	X	X	X
	CALLN	IBAU20GENR	X	X	X	X
	CALL	IBAU20TPE1	X	X		
	CALL	IBAU20TPE2	X			
	CALL	IBAU20DSK1			X	X
	CALL	IBAU20DSK2		X		X
	CALL	IBAU20DSK3			X	
030	PHASE		X	X	X	X
	CALLN	IBAU30ASGN	X	X	X	X
	CALL	IBAU30SCAN	X	X	X	X
	CALL	IBAU30TPE1	X	X		
	CALL	IBAU30DSK1			X	X
	CALLN	IBAU30SUBR	X	X	X	X
033	PHASE		X	X	X	X
	CALLN	IBAU33SUBR	X	X	X	X
	CALL	IBAU33TPE1	X	X		
	CALL	IBAU33DSK1			X	X
	CALLN	IBAU33RCUR	X	X	X	X
040	PHASE		X	X	X	X
	CALLN	IBAU40OTPT	X	X	X	X
	CALL	IBTOCGM	X	X		
	CALL	IBDOCGM			X	X
	CALL	IBTPCGM	X	X		
	CALL	IBDPCGM			X	X
	CALL	IBTCCGM	X	X		
	CALL	IBDCCGM			X	X
	CALL	IBTNCGM	X	X		
	CALL	IBDNCGM			X	X
	CALLN	IBAU40TPE1	X	X		
	CALLN	IBAU40DSK1			X	X
050	PHASE		X	X	X	X
	CALL	IBAU50TPE1	X	X		
	CALL	IBAU50DSK1			X	X
	CALLN	IBAU50CREF	X	X	X	X

* To insert Directory 3
** To insert the Macro Library

COBOL: Relocatable Library Modules for Object Programs

The following modules are required by COBOL object programs:

IBCOBOL
IBCBLADOVR
IBCBLDSPLY
IBCBLCMPAR
IBCBLFLDMP
IBCBLALTST
IBCBLSUBSC
IBCBLACCPT
IBCBLEXPON
IBCBLRDINT
IBCBLDVZER
IBCBLCLEAR

FORTRAN: Relocatable Library Modules for Object Programs

Required Modules

The following modules are required to run with any FORTRAN object program:

IBCOMMON	IBINDX2	IBBACKSP	EXP
IBLABEL	IBINDX3	IBENDFILE	ALOG
IBFOERR	IBEXPFF	IBREWIND	
IBINTRP	IBEXPFI	FLOAT	
IBINDX1	IBEXPII	IFIX	

Optional Modules

The following modules are not required by a FORTRAN program unless they are called by name in the source program. Inclusion of these modules is therefore an installation option, except (as noted) the selection of one optional module may require another.

ABS	DIM
AINT	DVCHK
AMAX0	EXIT
AMAX1	IABS
AMIN0	IDIM
AMIN1	INT
AMOD (requires AINT)	ISIGN
ATAN	MAX0
COS (requires SIN)	MAX1
MIN0	SIN
MIN1	SLITE (requires SLITET)
MOD	SLITET
OVERFL	SQRT
SIGN	

Floating-Point Arithmetic Modules

The four modules supporting floating-point arithmetic are on the Relocatable Library of the Master file in the following order:

POSITION	NAME	REMARKS
1	IBINTRP	For *programmed interpretation* of floating-point instructions.
2	OVERFL	For *machine interpretation* of floating-point instructions (on an IBM 7010 with the Floating-Point Arithmetic feature).
3	DVCHK	
4	IBINTRP	

To obtain the modules supporting the 7010 Floating-Point Arithmetic feature, the following card should be used:

```
6               16      21
IBINTRP         DELET   R
```

To obtain the modules that provide programmed interpretation for floating-point instructions, use this card:

```
6               16      21
OVERFL          DELET   R,IBINTRP
```

FORTRAN						
Work Files on	Tape		X	X		
	Disk				X	X
Go File on	Tape		X		X	
	Disk			X		X
Create Packet Name			TFORTRAN			DFORTRAN
	16	21				
	PHASE	FORTRAN	X	X	X	X
	CALLN	IBFTNCMN	X	X	X	X
	CALL	IBFTN05TO	X	X		
	CALL	IBFTN05DO			X	X
	CALLN	IBFTN05	X	X	X	X
	PHASE		X	X	X	X
	BASE1	FCMN/	X	X	X	X
	CALL	IBTPCGM	X		X	
	CALL	IBDPCGM		X		X
	CALL	IBTCCGM	X		X	
	CALL	IBDCCGM		X		X
	CALL	IBTNCGM	X		X	
	CALL	IBDNCGM		X		X
	CALLN	IBTOCGM	X		X	
	CALLN	IBDOCGM		X		X
	CALL	IBFTN10TO	X	X		
	CALL	IBFTN10DO			X	X
	CALL	IBFTN10TI	X	X		
	CALL	IBFTN10DI			X	X
	CALLN	IBFTN10	X	X	X	X
	PHASE		X	X	X	X
	BASE1	MOCG/	X	X	X	X
	CALL	IBFTN20TO	X	X		
	CALL	IBFTN20DO			X	X
	CALL	IBFTN20TI	X	X		
	CALL	IBFTN20DI			X	X
	CALLN	IBFTN20	X	X	X	X
	PHASE		X	X	X	X
	BASE1	MOCG/	X	X	X	X
	CALL	IBFTN25TI	X	X		
	CALL	IBFTN25DI			X	X
	CALLN	IBFTN25	X	X	X	X

Generalized Tape Sorting Program: Relocatable Library Modules

To create any tape sort program, all of the following modules must appear in a Relocatable Library and should be in the order given. Module IBSRTEQASN must be included twice, as shown.

IBSRTCOMAN
IBSRTPRIME
IBSRTCTLCD
IBSRTGASSR
IBSRTGASM3
IBSRTDUM00
IBSRTEQUAL
IBSRTIO101
IBSRTIO102
IBSRTIO104
IBSRTIO105
IBSRTREPLT
IBSRTREPLQ
IBSRTIO103
IBSRTIO106
IBSRTP1ASN
IBSRTDUM01
IBSRTEQASN
IBSRTIO109
IBSRTIO110
IBSRTIO107
IBSRTIO108
IBSRTIO203
IBSRTIO201
IBSRTMNTS2
IBSRTMNTM2
IBSRTRPPH2
IBSRTIO205
IBSRTIO206
IBSRTDUM02
IBSRTAMRG2
IBSRTIO204
IBSRTIO202
IBSRTIO314
IBSRTIO301
IBSRTIO302
IBSRTIO305
IBSRTIO306
IBSRTIO399
IBSRTMNTM3
IBSRTMNTS3
IBSRTRMRG3
IBSRTLKAD3
IBSRTIO303
IBSRTIO304
IBSRTSQTG3
IBSRTDUM03
IBSRTEQASN
IBSRTSUPH3
IBSRTAMRG3
IBSRTIO307
IBSRTIO308
IBSRTIO310
IBSRTIO311
IBSRTIO312
IBSRTIO309

TAPE SORT DEFINITION PROGRAM	
Create Packet Name	TSRTDEFIN
16 21	
PHASE SORTDEFINE	X
CALL IBSRTDEFIN	X

Generalized Sorting Program Using IBM 1301/2302 Disk Storage: Relocatable Library Modules

To create any disk sort program, all of the following modules must appear in a Relocatable Library and should be in the order given.

IBDSRTCOMN
IBDSRTPTTP
IBDSRTPRIM
IBDSRTGA01
IBDSRTGA02
IBDSRTGADM
IBDSRTEQAL
IBDSRTRPP1
IBDSRTOCF1
IBDSRTMCF1
IBDSRTIOJ1
IBDSRTIOK1
IBDSRTIOL1
IBDSRTIOM1
IBDSRTAP21
IBDSRTDUM1
IBDSRTEQAS
IBDSRTAP11
IBDSRTIOA1
IBDSRTIOC1
IBDSRTIOE1
IBDSRTIOB1
IBDSRTIOD1
IBDSRTIOF1
IBDSRTOCF2
IBDSRTMCF2
IBDSRTRPP2
IBDSRTAP12
IBDSRTOCF3
IBDSRTMCF3
IBDSRTRP13
IBDSRTRP23
IBDSRTRP33
IBDSRTRP43
IBDSRTRP53
IBDSRTRP63
IBDSRTRP73
IBDSRTRP83
IBDSRTRP93
IBDSRTIOR1
IBDSRTHS13
IBDSRTDUM3
IBDSRTAP13
IBDSRTAP23
IBDSRTAP33
IBDSRTAP43
IBDSRTAP53

DISK SORT DEFINITION PROGRAM	
Create Packet Name	DSRTDEFIN
16 21	
PHASE DSRTDEFINE	X
CALLN IBDSRTDEF	X

UTILITY PROGRAMS*								
Storage Print		X	X	X	X	X		
Tape Print			X	X		X	X	
Disk Print (1301, 2302, 1311)		X	X	X	X		X	X
1301 Disk Format/Address Generator				X	X			X
2302 Disk Format/Address Generator				X	X			X
1311 Format/Address Generator		X	X	X				
File Save				X	X			X
File Restore				X	X			X
Data File Generator				X	X			
Create Packet Name				UTILITIES				
001 PHASE	UTILITIES	X	X	X	X	X	X	X
CALLN	IBLOOKM	X	X	X	X	X	X	X
CALL	IBUTILITY	X	X	X	X	X	X	X
002 PHASE		X	X	X	X	X	X	X
CALL	IBUTILSCAN	X	X	X	X	X	X	X
003 PHASE			X	X		X	X	
CALL	IBTAPEDUMP		X	X		X	X	
004 PHASE		X	X	X	X		X	X
CALL	IBDISKDUMP	X	X	X	X		X	X
005 PHASE		X	X	X	X	X		
CALLN	IBCOREDCTL	X	X	X	X	X		
CALL	IBCOREDUMP	X	X	X	X	X		
006 PHASE				X	X			X
CALLN	IB01FAGEN			X	X			X
CALL	IBADDRESR			X	X			X
007 PHASE		X	X	X				
CALL	IB11ADRGEN	X	X	X				
008 PHASE				X	X			X
CALL	IBFILESAVE			X	X			X
009 PHASE				X	X			X
CALL	IBFILEREST			X	X			X
010 PHASE				X	X			X
CALLN	IB02FAGEN			X	X			X
CALL	IBADDRESR			X	X			X
016 PHASE				X	X			
CALL	IBFILEGEN			X	X			

*The Snapshot Program, if selected, is generated as part of the System Monitor or part of a dependent program.

SG1 PROGRAM			
SGF or SOF on	Tape	X	
	Disk		X
Create Packet Name		TSYSGEN1	DSYSGEN1
16 21			
PHASE SG1		X	X
CALL IBSYSGEN1		X	
CALL IBDSYSGEN1			X
	61		
* PHASE	1	X	

* To insert Directory 1.

SG2 PROGRAM			
SGF or SOF on	Tape	X	
	Disk		X
Create Packet Name		TSYSGEN2	DSYSGEN2
16 21			
PHASE SG2		X	X
CALL IBSYSGEN2		X	
CALL IBDSYSGEN2			X
PHASE			X
CALL IBDSYSGEN3			X

SG3 PROGRAM	
Create Packet Name	SYSGEN3
16 21	
PHASE SG3	X
CALL IBUPPER	X

MACRO PRINT and PUNCH PROGRAM			
Macro Library on	Tape	X	
	Disk		X
Create Packet Name		TMACROPRT	DMACROPRT
16 21			
PHASE MACROPRT		X	X
* CALL IBPRINTMT		X	
* CALL IBPRINTMD			X

*Contains an imbedded call for module IBPRINTM.

DISK LIBRARY LOADER	
Create Packet Name	DSKLIBLDR
16 21	
PHASE DSKLIBLDR	X
CALL IBSGLDLDR	X

1311 LABEL PROGRAM	
Create Packet Name	LABEL1311
16 21	
PHASE LABEL1311	X
CALL IB1311LBL1	X

SG4 PROGRAM	
Create Packet Name	SG4TD
16 21	
PHASE SG4	X
CALL IBSG4	X

SYSTEM DEFINITION PROGRAM (FILE ORGANIZATION SYSTEM)	
Create Packet Name	DEFINE
16 21	
PHASE DEFINE	X
CALL IBFOSYSDEF	X

MASTER TAPE LOAD PROGRAM*	
Create Packet Name	IBSGDL
16 21	
PHASE IBSGDL	X
CALL SGDLBOOT	X
PHASE	X
CALL IBDLIO	X
CALLN IBSGDLDR	X

*If a disk SOF (or SGF) is to have regenerative ability, this program must be the last program on the file.

COMPLETE SYSTEMS			
SOF is on	Tape	X	
	Disk		X
Create Packet Name		TSYSTEM	DSYSTEM
TMONITOR		X	
DMONITOR			X
TCLINKLOAD		X	
DCLINKLOAD	62		X
PHASE IBMLIBR	R	X	
TTRANSIT		X	
TSYSGEN2		X	
DSYSGEN2			X
SG5TD		X	X
TTRANSIT		X	
TAUTOCODE		X	
DAUTOCODE			X
TTRANSIT		X	
TSYSGEN1		X	
DSYSGEN1	62		X
PHASE CREATLIB	C	X	
TTRANSIT		X	
TSRTDEFIN		X	X
TTRANSIT		X	
TCOBOL		X	
DCOBOL			X
TTRANSIT		X	
TFORTRAN		X	
DFORTRAN			X
TTRANSIT		X	
UTILITIES		X	X
TMACROPRT		X	
LABEL1311			X
DMACROPRT			X
TTRANSIT		X	
SYSGEN3		X	X
DSRTDEFIN		X	X
TTRANSIT		X	
DSKLIBLDR			X
IBSGDL (must be last)			X

SG5 PROGRAM	
Create Packet Name	SG5TD
16 21	
PHASE SG5	X
CALL IBSG5	X
PHASE	X
CALL IBSG5D	X
PHASE	X
CALL IBSG5T	X
PHASE	X
CALL IBSG5E	X

This section illustrates a series of interrelated System Generation jobs for a tape-oriented system. Setup requirements for the tape units are given for each example. The setup information relates Table 1 ("Basic Concepts — Tape-Oriented System") of this publication and the ASGN cards required by the specific example.

Using the IBM-supplied Master file, the successive examples are:

Example 1 — Generation of SGF
Example 2 — Generation of modified SGF
Example 3 — Generation of Autocoder/FORTRAN SOF

Example 1

Figure 20 illustrates the generation of an SGF from the Master file. The user's installation is assumed to include a machine of the following configuration.

System:	IBM 1410 with two input/output channels and 80,000 positions of core storage. No Tele-processing No disk storage
Channel 1:	1402 Card Read Punch 1403 Printer Six 729 tape units
Channel 2:	Six 729 tape units

NOTE: CREATTTRANSIT card(s) may be added to give additional copy(ies) of Transitional Monitor at the time Monitor is generated.

Contents of New Resident Monitor

System description control cards define a new System Monitor as follows.

GEN01 defines:
  Printer, reader, and punch on channel 1
GEN02 defines:
  Core Image file
  Six tape units on channel 1 (A0-A5)
  Six tape units on channel 2 (B0-B5)
GEN08 defines:
  IBM 1410 System
  80,000 positions of core storage
  Core Image file
  Unit-record printer
  Unit-record punch
Alternate input routine (AIU)
  55 to be entered in Communication Region, /LIN/
  Ten-character console input area
  Type and print Monitor control cards
  SOF assigned to A0
  SIU assigned to R1
  SPR assigned to P1
  SPU assigned to X1
  MDM assigned to B4
  Memory print Snapshot at unusual end of program
GEN09 defines:
  5 Monitor Reserve files (MR0-MR4)
GEN10 defines:
  5 Monitor work files (MW0-MW4)
  MW1 assigned to B0
  MW2 assigned to A1
  MW3 assigned to B1
GEN11 defines:
  No TP files
DEVDF defines:
  729 tape units on channel 1
  1402 Card Read Punch on channel 1
  1403 Printer on channel 1
  729 tape units on channel 2
IOKDF defines:
  IBM 1410 System
  Error statistics to be taken
  /OGR/ at 70000

The following points are illustrated by this example.

1. The Sort Definition program and one configuration of the Utility program are generated in addition to those that were on the Master file. The Create Library packet for the Utility program is not used in order to show how the Linkage Loader control cards are placed. Also, since there is no disk storage, the Disk Print Utility is omitted.

2. The "L" in card column 58 of the EXEQ SG2 card indicates that the largest size records are to be built.

```
6         16   21
MON$$      DATE YRDAY
MON$$      JOB  SAMPLE NO.1 TO GENERATE AN INSTALLATION SGF
MON$$      ASGN MJB,A1
MON$$      ASGN MW3,A1
MON$$      ASGN MW1,A2
MON$$      ASGN MW2,B1
MON$$      ASGN MGO,B2
MON$$      ASGN MRO,B2
MON$$      MODE GO,SG
MON$$      EXEQ AUTOCODER,SOF,SIU,NOFLG,NOPCH
           HEADRSAMPLE NO.1
           GEN01P1,R1,X1
           GEN02/MDM/,1,A0,A1,A2,A3,A4,A5
           GEN02/MDM/,2,B0,B1,B2,B3,B4,B5
           GEN08170009011 9,,55,10,099,A0,R1,,,P1,X1,,,B4,SNAP
           GEN09S
           GEN10S,,B0,A1,B1
           GEN11
           DEVDF1,729,1402,1403
           DEVDF2,729
           IOKDF1410,,,4,,,,,,70000
           END
MON$$      EXEQ SG1                                          7
           LOCATC,CREATLIB
           INSERC
           LOCATR,IBMLIBR
           INSERR
           LOCATM,AUTOCODER
           INSERM
           END
           CREATTMONITOR
           CREATTAUTOCODE
           CREATTSYSGEN1
           PHASECREATLIB                                      C
           CREATTSRTDEFIN
           CREATTLINKLOAD
           PHASEIBMLIBR                                       R
           CREATTSYSGEN2
001        PHASEUTILITIES
           CALL IBUTILITY
002        PHASE
           CALL IBUTILSCAN
003        PHASE
           CALL IBTAPEDUMP
005        PHASE
           CALLNIBCOREDCTL
           CALL IBCOREDUMP
           END
MON$$      EXEQ LINKLOAD
           INPUTMW2
MON$$      EXEQ SG2                                         L7
MON$$      END
```

Figure 20. Control Cards to Generate an SGF from the Master File

Setup Instructions

Setup instructions for this example are:

1. Mount Master file on A0.
2. Mount scratch tapes on A1, A2, B1, B2.
3. The output tape will be on MW2.

Example 2

Figure 21 illustrates the modification of the SGF created in Example 1.

The following points are illustrated by this example.

1. The Monitor from Example 1 is copied onto the new file.

2. A two-phase user program (USERPROG) is added. The first phase comprises SUBPROG1 and SUBPROG2. The second phase consists of SUBPROG3. The relocatable subprograms are added to IBMLIBR after compilation. The appropriate Linkage Loader control cards have been combined into a package and added to CREATLIB. USERPROG is put into the operating section of the modified SGF.

3. SG1 and SG2 cards no longer require machine size indicators.

4. The "L" in card column 58 of the EXEQ SG2 card indicates that USERPROG is to be built in largest size records. The other programs are already in largest size.

5. Multiple copies of the Transitional Monitor (IBTRANSIT) are added to reduce search time during future operations.

6. MW1, MW2, and MW3 are assigned within Monitor; therefore, no ASGN cards are needed for them. See GEN10, in Example 1.

Setup Instructions

Setup instructions for this example are:

1. Mount the SGF on A0.
2. Mount scratch tapes on A1, B0, B1, B2.
3. The output tape will be on MW2.

```
6          16   21
MON$$      DATE YRDAY
MON$$      JOB  SAMPLE NO. 2 SGF WITH USER PROGRAM AND IBTRANSITS
MON$$      ASGN MJB.B1
MON$$      ASGN MGO.B2
MON$$      ASGN MRO.B2
MON$$      MODE GO.SG
MON$$      EXEQ AUTOCODER
                        SOURCE DECK FOR SUBPROGRAM NO.1
                        SOURCE DECK FOR SUBPROGRAM NO.2
                        SOURCE DECK FOR SUBPROGRAM NO.3
MON$$      EXEQ SG1
           LOCATC.CREATLIB
USERPROG   INSERC
           GENERUSERPROG
           PHASEUSERPROG
           CALL SUBPROG1
           CALL SUBPROG2
           PHASE
           BASE1SUBPROG2
           CALL SUBPROG3
           LOCATR.IBMLIBR
SUBPROG1   INSERR
SUBPROG2   INSERR
SUBPROG3   INSERR
           LOCATM.AUTOCODER
           INSERM
           END
           INCLDIBBOOT
           INCLDIBRESMON
           INCLDIBTRANSIT
           INCLDAUTOCODER
           INCLDIBTRANSIT
           END
MON$$      EXEQ LINKLOAD
           PHASEUSERPROG
           CALL SUBPROG1
           CALL SUBPROG2
           PHASE
           BASE1SUBPROG2
           CALL SUBPROG3
MON$$      EXEQ SG1
           INCLDIBTRANSIT
           INCLDSG1
           INCLDCREATLIB
           INCLDIBTRANSIT
           INCLDLINKLOAD
           INCLDIBMLIBR
           INCLDSG2
           INCLDIBTRANSIT
           END
MON$$      EXEQ SG2                                        L
MON$$      END
```

Figure 21. Control Cards to Modify the SGF Created by the Cards of the Preceding Figure

Example 3

Figure 22 illustrates the creation of an SOF, designed for efficient FORTRAN and Autocoder compile-and-go operation, from the file created in Example 2.

The following points are illustrated by this example.

1. The Go file (MGO) is not required in this job.
2. The IBMLIBR is stripped to retain only those subprograms required for FORTRAN and Snapshot.
3. The Macro Library is stripped to retain only those Autocoder macro routines used by dependent programs. The Monitor-generation macro routines are deleted.
4. The CREATLIB is not referenced; therefore, it is not included.
5. FORTRAN is generated from IBMLIBR.
6. USERPROG is included.
7. The file is sequenced for efficiency.

Setup Instructions

Setup instructions for this example are:

1. Mount the modified SGF (output from Example 2) on A0.
2. Mount scratch tapes on A1, B0, B2, B3.
3. The output tape will be on MW2.

```
6         16   21
MON$$      DATE YRDAY
MON$$      JOB  SAMPLE NO. 3 SOF WITH AUTOCODER AND FORTRAN
MON$$      ASGN MW1,B0
MON$$      ASGN MW2,B1
MON$$      ASGN MJB,B2
MON$$      ASGN MR0,B3
MON$$      MODE SG
MON$$      EXEQ SG1
           LOCATR,IBMLIBR
IBSRTCOMANDELETR,IBCBLCLEAR
IBRANDOM   DELETR,TPLIBGENXP
           LOCATM,AUTOCODER
GEN01      DELETM
GEN02      DELETM
GEN03      DELETM
GEN04      DELETM
GEN05      DELETM
GEN06      DELETM
GEN07      DELETM
GEN08      DELETM
GEN09      DELETM
GEN10      DELETM
GEN11      DELETM
DEVDF      DELETM
IOKDF      DELETM
GENRM      DELETM
DUMP       DELETM
ENDLD      DELETM
LDPTC      DELETM
TPDIR      DELETM
           END
           INCLDIBBOOT
           INCLDIBRESMON
           INCLDIBTRANSIT
           INCLDAUTOCODER
           CREATTFORTRAN
           END
MON$$      EXEQ LINKLOAD
           INPUTMW2
MON$$      EXEQ SG1
           INCLDIBTRANSIT
           INCLDLINKLOAD
           INCLDIBMLIBR
           INCLDIBTRANSIT
           INCLDUSERPROG
           INCLDIBTRANSIT
           END
MON$$      EXEQ SG2                                          L
MON$$      END
```

Figure 22. Control Cards to Create a FORTRAN/Autocoder SOF from the Output File of the Preceding Figure

Disk Load Programs

This section explains: (1) the use of Disk Load program for loading the entire system, and (2) the Disk Library Loader for loading separately produced relocatable libraries. The Disk Load program operates outside the system and requires separate setup and operating procedures. The Disk Library Loader (DSKLIBLDR) operates within the system as a normal job.

Disk Load Program

The Disk Load program loads the contents of the disk system source tape and library tape onto disk in the areas specified by the user. This is the first program that appears on the disk Master file. Three configurations can be loaded by the program:

1. System tape and library tape physically the same reel.
2. System tape only.
3. System tape and library tape physically different reels.

When both the system and a library are to be loaded onto disk, two logically separate files are created on the disk.

NOTE: If specified, the Disk Load program formats the areas of the disk required to contain the system and the library. Formatting is in Load mode, with geometric record addressing and with 2,165 character records. Only the specified cylinders are formatted. If the file being loaded exceeds the number of cylinders specified, a rerun is required. (See description of message 21551 under "Console Messages," below, for information on how to specify formatting.) Formatting of disk areas required for files (e.g., MGO and MJB) used during the System Generation process may be accomplished by using the 1301 or 2302 Format/Address Generator utility program.

Program Description

During the loading of the system tape, two directories are created. Directory 1 is the program directory; Directory 3 is the macro directory. Both directories are in a form suitable for use by table lookup instructions. The argument of each table is the program or macro name being sought and the function of each table is the corresponding track address of the first record of the program or macro. Both tables contain a short entry to terminate lookup. Should a program or macro contain more than one record, the additional records are found in the records that follow sequentially.

Multiphase programs are intraconnected by control data contained in the first 12 characters of the first record of each phase. The first four characters of this data are the track number of the previous phase of the program, if any. If there is no previous phase, this field contains blanks.

The next four characters of the control data are the track number of the next phase of the program, if any. If there is no subsequent phase, this field contains blanks. The next three characters of the data are the phase number of the phase located in that record. The last character of the field is for special use; it is the directory number if that record should be a directory.

Directory 1 may be more than one record. For this situation, the first record is linked to the next by a track number in the last four characters of the original record.

The macro directory, Directory 3, is limited in size. The maximum number of macro names that can be contained in the disk macro directory is 238, and any excess is lost. In this case, a diagnostic message is issued.

An additional directory is created as the first element of the Relocatable Library (a separate file). This directory is identical in format to Directory 1 and contains the names of the library subprograms.

Program Restrictions

The two program restrictions are:

1. No two successive directory requests are permitted.
2. The program is restricted to channels 1 and 2.

Setup Instructions

The system tape, or system tape with library if they are on the same physical reel, must always be placed on a channel 1 or channel 2 tape unit to run the program. (If the LOAD TAPE button of the IBM 7010 is to be used, the reel must be mounted on unit 10.)

If the system tape and library tape are physically different reels, the library tape must be mounted on unit 10 or 20 for the IBM 1410. The system tape can be placed on any other channel 1 or channel 2 tape unit.

For the IBM 7010, the system tape must be mounted on unit 10 and the library tape must be mounted on unit 20. Refer to the *Operator's Guide* for detailed operating instructions.

Console Messages

The console messages that follow are associated with the Disk Load program. Information should be provided to the operator so that those messages requiring operator action can be handled efficiently.

Disk Load Program Console Messages

21551 ENTER START RCD AND CYLS FOR FILE ACMTTTTH2zNN

Description and Action: Enter in the indicated format the address from which file is to be started* and number of cylinders to be used.

A	Access
C	Channel
M	Module
TTTTH2	Disk geometric record address. (H2 is identified as HR under "Organization of Data Files on Disk Storage.")
z	If z is 1 (for 1301) or 2 (for 2302), the Disk Load program will format the specified area, write H2 and record addresses, and load the specified area. If z is blank, the Disk Load program will load the specified area. If 1 is indicated in the format key, the specified area will be formatted in load mode with a two-character HA2, a six-character record address and a 2,165 character data record. If 2 is indicated in the format key, the specified area will be formatted in load mode with a two-character HA2, a six-character record address, a 2,165 character data record, a second record address (one higher than the first), and a second 2,165 character data record.
NN	Number of cylinders to be used by file.

*This address must agree with the start address indicated on the GEN03-GEN06 card when the system was created.

21552 FILE XCDS CYL LGTH, PRESS START TO CONT.
Description and Action: Cylinder length (NN) too small. If disk format permits, file can be continued by pressing START.

11551 FILE START RCD XXXXXX, LAST RCD XXXXXX.
Description and Action: Message informs operator of area that file occupies. Disk record addresses are of the form TTTTH2 as explained for message 21551.

11553 MAC LIB OVFLO
Description and Action: Macro library directory is full (238 elements) and succeeding macros are lost.

BOOTSTRAPS
. . . (card image) . . . 1410 BOOT
. . . (card image) . . . 7010 BOOT
Description and Action: Message shows card image of bootstrap required to load the first record from disk to core storage. Operator must keypunch appropriate card for his machine (IBM 1410 or 7010) and place card in SIU. See the publication *Operator's Guide* for complete procedure.

01551 END JOB
Description and Action: All operations are complete. System tape (and library tape, if any) has been loaded as specified by the character entered at location 00000 or by the contents of the system file being loaded.

21553 (Same as message 21551)
Description and Action: Same description and action as message 21551 except that this message pertains to the disk location desired for the Relocatable Library.

21554 (Same as message 21552)
Description and Action: Same as message 21552 except that this message 21554 pertains to the Relocatable Library.

11552 (Same as message 11551)
Description and Action: Same as message 11551 except that this message 11552 pertains to the Relocatable Library.

11554 INVALID FILE, NO DIR 1 REQUEST
Description and Action: System will not operate without Directory 1 which was not requested by Linkage Loader card.

11555 NO TAPE LABEL FOUND
Description and Action: Library tape was indicated to have a tape label by word mark entered in 00000, but no label was found.

11556 NO RLIB HEADER FOUND
Description and Action: Tape designated as Relocatable Library by character entered in 00000 does not contain the Relocatable Library header.

NOTE: The IOCS may generate other messages due to seek checks, no record found, etc. These may be caused by operator error in making console entries, incorrect formats, or disk unit malfunctions. The operator may cancel console inquiries in the event of error.

Disk Library Loader (DSKLIBLDR)

The Disk Library Loader loads the contents of a separate relocatable library tape onto the disk. This load program is a subprogram of the Master file. The library tape to be loaded must be on symbolic unit MW1, and the disk area loaded is that which is assigned as LIB.

Program Description

The first record of the file loaded on the disk is a directory of library subprograms that is built as the file is loaded. A brief description applicable to this directory is given earlier, under "Disk Load Program." The library tape is read in Move mode, and the disk is written in Load mode.

Setup Instruction and Use of Program

The relocatable library tape must be mounted on symbolic unit MW1.

The following example shows how the Disk Library

Loader is used to load a relocatable library tape into LIB on disk storage.

```
6           16      21
MON$$       JOB     LOAD SEPARATE RELOC
                                    LIBE
MON$$       ASGN    MW1,A5
MON$$       ASGN    LIB,D8
MON$$       EXEQ    DSKLIBLDR
MON$$       END
```

Console Messages

The console messages that follow are associated with the Disk Library Loader.

Disk Library Loader Console Messages

91558 NO RLIB HEADER FOUND
Description and Action: Neither of the first two tape records was a relocatable library header. Control is returned to Monitor with NOGO switch turned on.

91556 RLIB XCDS DISK AREA
Description and Action: The Relocatable Library is too large to be loaded in the disk area assigned as LIB. Control is returned to Monitor with the NOGO switch turned on.

11557 RLIB START RCD XXXXXX, LAST RCD XXXXXX
Description and Action: Informs operator of disk area which relocatable library occupies. Disk record addresses are of the form TTTTH2 as explained for message 21551, "Disk Load Program."

The SG1 and SG2 diagnostic messages are listed in this section with an explanation of the message and suggested corrective action for: (1) tape-oriented systems, and (2) disk-oriented systems.

Tape-Oriented System

Diagnostic messages that may be produced on the console printer during execution of SG1 and SG2 are listed in sequence by message number in the following section. When one of these messages appears, processing halts and special end of program occurs unless the "Corrective Action" comment states that processing will continue or that no corrective action is to be taken. After the correction is made, the job must be rerun. Full instructions appear in the publication, *Operator's Guide.*

SG1 and SG2 Diagnostic Messages for a Tape-Oriented System

11501 XXXXXXXXXX NOT ON TAPE
Explanation: Request has been made for the named item but it cannot be located on the SOF or on the Relocatable or Create Library.
Corrective Action: Check control deck for proper call and/or spelling, etc.

11502 SEQERR-XXXXX
Explanation: A macro statement sequence number with low-order blank or an out-of-order sequence number has been encountered in the SIU.
Corrective Action: Generation continues but the statement in question is omitted from the library and is printed on the SPR. Check the control deck.

11503 DIRECTORY X NOT AVAILABLE
Explanation: X can be "1" or "3."
Corrective Action: Check the control deck to make sure directory has been generated previous to this reference. If X is not 1 or 3, the PHASE card for the directory has been mispunched.

11504 XXXXXXXXXX LIBRARY NOT AVAILABLE
Explanation: Request has been made for the named library but that library cannot be located or does not exist.
Corrective Action: Check the control deck to make sure that a library of the name XXXXXXXXXX has been copied, updated, or added by SG1.

11505 NEW SOF ON XXX
Explanation: XXX is the x-control field for the unit on which the System Generation *output* file is located.
Corrective Action: None.

11507 LIB TYP UNKNOWN
Explanation: Request has been made for a library whose type is not M, R, or C.
Corrective Action: Check control deck. The PHASE card for the library header may have been punched incorrectly. The M, R, or C must be in column 62 of the PHASE card.

11508 BACKSPACE FAILURE – SOF
Corrective Action: Restart.

11509 BACKSPACE FAILURE – MJB
Corrective Action: Restart.

11510 NEW LIBRARY ON XXX
Explanation: XXX is the x-control field for the unit on which the new library is located.
Corrective Action: None.

11511 UNKNOWN HDR TYP
Explanation: Header record is not proper format.
Corrective Action: Check control deck. Check that all the libraries processed by SG1 were done in one block and were processed before absolute programs. Also check that no conflict exists in input/output assignments.

11512 NO TYPC COUNTS
Explanation: Specific cause has not been determined.
Corrective Action: Check control deck for extraneous PHASE cards, order of cards, etc.

11513 EXTRANEOUS HEADER
Explanation: Record descriptions contained on MW1 (header records) do not agree with contents of Job file.
Corrective Action: Ensure that *all* requests for SG1 to INSER, DELET, REPLC, and ADD library material were made prior to requests to process absolute format records. Also check that no conflict exists in input/output assignments.

11514 CHECK CONTROL DECK
Explanation: A System Generation control card is placed where none is expected, or a control card is not where it should be (example: LOCAT*M* followed by DELET*R*).
Corrective Action: Correct control card deck.

11515 MODULE XXXXXXXXXX NOT ON GO TAPE
Explanation: Occurs during library maintenance. The named subprogram was not immediately available on the SIU and was not found on the Go file.
Corrective Action: Check control deck. Subprogram name may be mispunched.

11516 SOF RECORD TOO LARGE TO COPY
Explanation: SG1, when working with largest possible records, cannot copy an SOF on a smaller machine than was used to generate the SOF.
Corrective Action: The records on the SOF cannot be copied on the size machine being used, with SG1 based where it is. Regeneration of the SOF is necessary.

11517 NO ALTERNATE LIBRARY HEADER
Explanation: SG1 has been directed to find an external library, but did not find an identifying header record on LIB.
Corrective Action: Tape is probably wrong reel. Mount proper reel and begin again.

11518 (No message)
Explanation: A macro routine or a model statement has been specified, but does not appear on the system file. The questionable reference is printed on the SPR.
Corrective Action: Check control deck. The input to SG1 may be out of sequence.

11519 MACRO DIR EXCEEDS 240
Explanation: The Macro Library can have only 240 entries, and this number has been exceeded.
Corrective Action: Reduce number of macro routines to specified limit.

11520 NO SYSGEN END CARD
Corrective Action: Check control deck. System Generation will process the last card read as if it were followed by an END card. No action is required if all other cards are in order.

11521 HDR CD INVALID
Explanation: Column 60 of the EXEQ card indicates a header is desired on the output tape. The card following on the SIU is not a valid header card.
Corrective Action: Correct deck.

11522 CC60 OF EXEQ INVALID
Explanation: Column 60 of the EXEQ card has a digit other than "1" or "2."
Corrective Action: Correct the EXEQ card for the type of header desired.

11523 SOF EXCEEDS 154 LIMIT
Explanation: Tape SOF may have no more than 154 items, and this number has been exceeded.
Corrective Action: Deck may be in error. Some items may have been copied several times.

Disk-Oriented System

Diagnostic messages that may be produced on the console printer during execution of SG1 and SG2 are listed in sequence by message number in the following section. When one of these messages appears, processing halts and special end of program occurs unless the "Corrective Action" comment states that processing will continue or that no corrective action is to be taken. After the correction is made, the job must be rerun. Full instructions appear in the *Operator's Guide.*

SG1 and SG2 Diagnostic Messages for a Disk-Oriented System

11521 HDR CD INVALID
Explanation: Column 60 of the EXEQ card indicates a header is desired on the output tape. The card following on the SIU is not a valid header card.
Corrective Action: Correct deck.

11522 CC60 OF EXEQ INVALID
Explanation: Column 60 of the EXEQ card has a digit other than "1" or "2".
Corrective Action: Correct the EXEQ card for the type of header desired.

11562 CREATLIB NOT ON SOF
Explanation: SG1 has been executed, but the Create Library is not on the system.
Corrective Action: An SOF that includes the Create Library must be generated and this SOF used to process the job that caused the message.

11563 PACKAGE XXXXXXXXXX NOT IN CREATLIB
Explanation: No packet of the name XXXXXXXXXX has been found in the Create Library by SG1.
Corrective Action: Check the control deck to be sure that spelling on CREAT card is correct.

11564 OUTPUT ON XXX
Explanation: XXX is the x-control field for the unit on which the new output file is located.
Corrective Action: None.

11565 DISK LOADER NOT PRESENT
Explanation: IBSGDL has not been included or generated as the first item.
Corrective Action: Rerun the job including IBSGDL.

11566 NO SYSGEN END CARD
Corrective Action: Check control deck. System Generation will process the last card read as if it were followed by an END card. No corrective action is necessary if all other cards are in order.

11567 CHECK CONTROL DECK
Explanation: A System Generation control card is placed where none is expected, or a control card is not where it should be (example: LOCAT*M* followed by DELET*R*).
Corrective Action: Correct control card deck.

11568 (No message)
Explanation: A macro routine or a model statement has been specified but does not appear on the system file. The questionable reference is printed on the SPR.
Corrective Action: Check control deck. The input to SG2 may be out of sequence.

11569 SEQERR-XXXXX
Explanation: A macro statement sequence number with low-order blank or an out-of-order sequence number has been encountered in the SIU.
Corrective Action: Generation continues but the statement in question is omitted from the library and is printed on the SPR. Check the control deck.

11570 ALTERNATE LIBRARY HEADER
Explanation: SG2 has been directed to find a library but did not find an identifying header record on LIB.
Corrective Action: Tape is probably wrong reel. Mount proper reel and begin again.

11571 MODULE XXXXXXXXXX NOT ON GO FILE
Explanation: Occurs during library maintenance. The named subprogram was not immediately available on the SIU and was not found on the Go file.
Corrective Action: Check control deck. Subprogram name may be mispunched.

11572 XXXXXXXXXX NOT AVAIL
Explanation: An INCLD card has specified the name of an item which is not in the system.
Corrective Action: Check control deck for proper spelling of item name.

11573 XXXXXXXXXX NOT VALID
Explanation: An INCLD card has specified the name of an item which does not contain valid program information. The area assigned to SOF (on the disk) has been accidentally altered or destroyed.
Corrective Action: Reload the SOF from the output tape from the previous System Generation run.

Additions and improvements to the Operating System require updating of the Relocatable, Create, and Macro libraries. The SG5 program provides a simplified method of updating these libraries with a minimum of card handling.

Input to the SG5 program is:

1. A modification tape (supplied by IBM)
2. The user's SOF, SGF, or Master file
3. The required System Monitor control cards (JOB, ASGN, EXEQ, etc.)

Execution of SG5 produces an output containing:

1. Change data
2. Control cards to effect these changes
3. Control cards required to perform functions associated with generation of an SOF (EXEQ, INSER, ASGN, INCLD, etc.)

The control data generated by SG5 becomes SIU input. This input directs execution of the operations required to make a normal System Generation update run. The final output is an SOF, SGF, or Master File identical to the original except that the Relocatable, Create, and Macro libraries have been updated and represent the latest version of the Operating System libraries.

The output of SG5 provides the control cards that the user normally would code, key punch, and verify prior to performing maintenance on his system files.

A second program, SG4, is also available. IBM uses this program to create the modification tape the user receives. Some users will not require this program, but those with system libraries other than the ones supplied by IBM will find that SG4 facilitates maintenance of these libraries. To generate his own modification tape, the user employs SG4 with the system file, the required control cards, and the change modules (see "The SG4 Program" in this section). Figure 23 is a summary of the use of the SG4 and SG5 programs and the modification tape.

If the operating section of the modified system file is affected by the library changes and the user wishes to incorporate them, another System Generation run must be made. The update run with the SIU prepared by SG5 can update only the Macro, Create, and Relocatable Libraries.

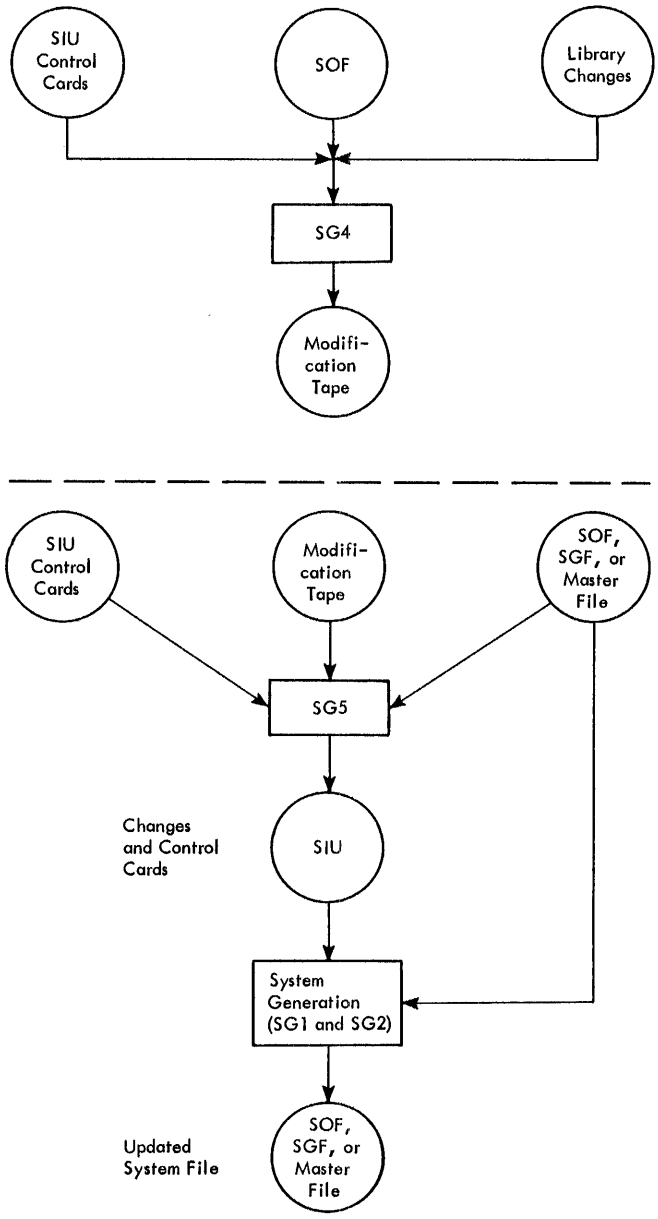

Figure 23. System Maintenance

Modification Tape

The modification tape contains the following data:

1. Two directory records of 2,500 characters each
2. Card-image data records blocked into 2,000-character physical records. These data records contain library changes preceded by their respective control cards
3. End of File (tape mark)
4. Standard 120-character trailer label
5. End of File (tape mark)

The Relocatable Library modules are blocked so that each module begins with a new record, but the module can be more than one record long. Padding with 9's is used if the module does not complete a record. The Macro and Create Library changes are continuously blocked (i.e., a new record is not begun for each new Macro or Create packet), and padding is added to the last record only, if required.

Both the directory of changes on the tape and a list of the control cards generated are printed automatically at the end of the SG4 run. IBM includes these listings when it supplies the modification tape.

The directory of changes is useful for checking that all desired modifications are included. It is printed with five entries per line, each line having the following format:

Progrname1bWbxxxxbbbbbProgrname2bWxxxx... etc.

Ten characters are allowed for the program name. W can be R, M, or C according to the type of library being changed; b indicates a blank; and xxxx is the four-character record count (see Figure 24).

The control cards are listed one card per line as follows:

xxxbbbProgrname1byyyyyW

The three-character sequence number (xxx), which is required by SG5, is followed by three blanks; ten characters are allowed for the program name; yyyyy is the type of card, either REPLC, INSER, or DELET; and W is R, M, or C according to the type of library being changed (see Figure 25).

```
001  IBINCX1    REPLCR
002  IBINCX2    REPLCR
003  IBINCX3    REPLCR
004  IBEXPFI    REPLCR
005  IBEXPFF    REPLCR
006  EXP        REPLCR
007  IBLOCKM    DELETR
008  IBREADMOCCREPLCR
009  IB1301DUMPREPLCR
010  IBFILESAVEINSERR,TPLDDCP1
```

Figure 25. Control Card List

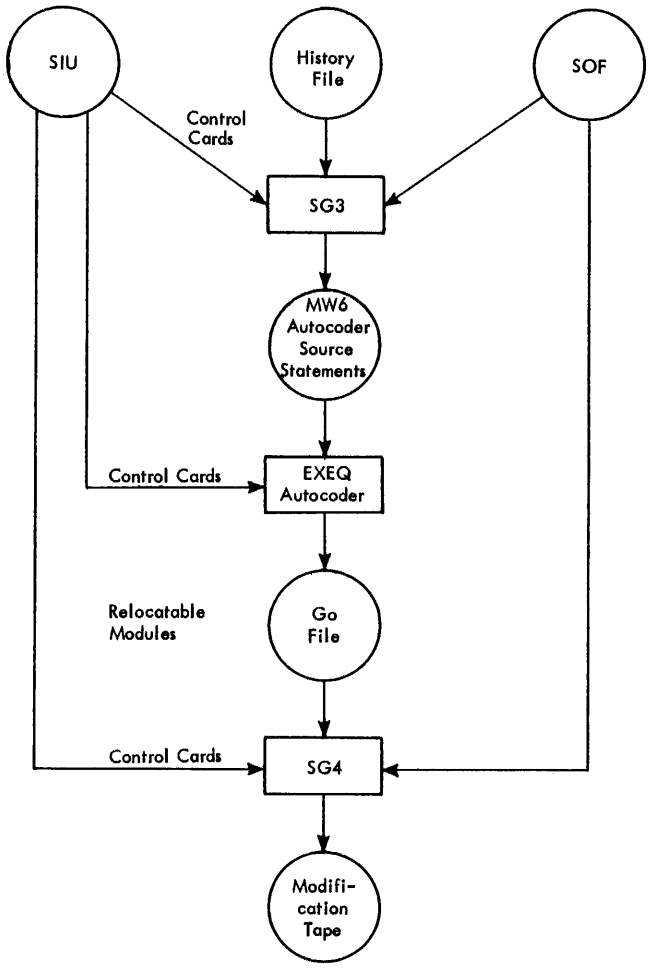

Figure 26. SG4 Update Data Flow

The SG4 Program

Usually, the user updates his History file just prior to using SG4. The SG3 program (see Appendix A in this publication) performs the update and, at the same time, places Autocoder source statements on MW6. These source statements are then processed by the Autocoder processor in the normal manner. SG4 generates the modification tape using control card information and Autocoder output. SG4 can process a maximum of 199 program modules in one run. A flowchart showing one use of SG4 is shown in Figure 26.

Machine Requirements

SG4 requires two tape units in addition to the SOF. MW1 must be assigned as a work file for the SG4 run, and MW2 must be assigned to the modification tape that SG4 is generating. MW1 and MW2 must be tape units; the SOF can be a tape or disk unit. If the modifications have been put on the Go file, MGO must also be assigned.

The tape files are in Move mode and odd parity.

```
GEN08      M 1012     IOKDF      M 0010     UTILITIES  C 0031     IBINDX1 R 0006     IBINDX2    R 0007
IBINDX3    R 1008     IBEXPF1    R 0021     IBEXPFF    R 0012     EXP     R 0039     IBLOCKM    R 0001
IBREADMCCC R 0114     IB1301DUMP R 0150     IBFILESAVE R 0203
```

Figure 24. SG4 Directory

SG4 can handle files with a maximum of 550 records of 2,000 characters each, or 14,000 records of 80 characters each.

Input Format

The input tape for SG4 can contain three types of elements: Macro patches, Create packets, and Relocatable Library modules. These elements must appear in the order given below. Each element that is an insertion or replacement must be preceded by its SG1/SG2 control card(s).

1. Macro patches, each patch preceded by a REPLCM or INSERM control card.
2. Create packets, each packet preceded by an INSERC or REPLCC card and a GENER card.
3. Relocatable Library modules, each module preceded by an INSERR or REPLCR card.

DELET cards can be used to remove any library element. The DELET card must not have library cards immediately following.

Within each type of element (Macro, Create, or Relocatable), the changes for the modules should be in the same order as the modules on the system file to be updated by SG5. If the programmer follows this practice, he can shorten the SG5 run by reducing the search time. If the order of the elements is not known, the only disadvantage is a longer execution of SG5.

If SG4 reads an INSERR or REPLCR control card and no Relocatable Library module follows it, SG4 searches the Go file for the name as it appears in columns 6 to 15 of the control card. SG4 finds and reads the module from the Go file and processes the module normally; if SG4 does not find the module, an error message is printed.

Figure 27 is an example of a typical SG4 deck.

```
6          16   21
MON$$       DATE 12345
MON$$       JOB  SG4
MON$$       ASGN MGO,A6
MON$$       ASGN MW1,B1
MON$$       ASGN MW2,A2
MON$$       ASGN MW3,B3
MON$$       ASGN MW4,A4
MON$$       ASGN MW5,A5
MON$$       ASGN MW6,B6
MON$$       MODE GO
MON$$       EXEQ SG3
*** CONTROL CARDS TO CALL SYMBOLIC DECKS FROM HISTORY FILE ***
MON$$       EXEQ AUTOCODER,,MW6,NOPCH
MON$$       EXEQ SG4
GET         INSERM,AAAAA
***        CHANGES       ***
GET         REPLCM,AAAAA,BBBBB
***        CHANGES       ***
GET         DELETM,AAAAA,BBBBB
GEN08       INSERM,AAAAA
***        CHANGES       ***
GEN10       DELETM,AAAAA,BBBBB
TSYSTEM     REPLCC
            GENERTSYSTEM
***   SYSTEM CREAT PACKET   ***
DSYSTEM     DELETC
TDLINKLOADINSERC
            GENERTDLINKLOAD
***   TDLINKLOAD CREAT PACKET   ***
SNAPSHOT    REPLCR                  RELOCATABLE
IBAU10IOTBREPLCR                    PROGRAMS ARE
FILESAVE    INSERR,FILEREST         TAKEN FROM
IBUPPER     DELETR                  GO FILE
MON$$       END
```

Figure 27. Typical SG4 Control Card Deck

Messages

The following messages indicate that the output of SG4 is invalid. The number of the message is printed on the console typewriter; the text, on the SPR. A condition producing any of these messages terminates the program.

11544 UNCORRECTABLE ERROR ON SIU
Explanation: The input tape has a read error that cannot be corrected.
Corrective Action: Rerun the job with a new input tape.

11545 UNCORRECTABLE ERROR ON MW1, MW2, or MGO
Explanation: The indicated tape file has a read or write error that cannot be corrected.
Corrective Action: If the error is on MW1, or MW2, rerun the job with a new tape. If the error is on MGO, rerun with a backup MGO file.

The following diagnostic messages indicate errors in the input to the program. When any of these errors occur, SG4 continues to edit the input for further errors but stops processing the input. The messages appear with the number on the typewriter console and the text on the SPR.

11546 FILE CAPACITY EXCEEDED
Explanation: The output file produced is larger than the maximum allowed.
Corrective Action: Shorten the input file and rerun the job.

11547 DIRECTORY CAPACITY EXCEEDED
Explanation: The capacity of SG4, which is 199 program modules, has been exceeded.
Corrective Action: Reduce the number of program modules and rerun the job.

11548 MW1 or MW2 NOT ASSIGNED TO TAPE
Explanation: The MW1 or MW2 has not been assigned as a tape file, as required by SG4.
Corrective Action: Reassign MW1 or MW2, as required, and rerun the job.

11549 n BAD INPUT CARD **** (contents of card)
Explanation: n indicates the type of error, as follows:

0	Format
1	Sequence
2	Title card
3	Duplicate entry
4	GENER card error
5	Control card missing
6	Module missing on Go file, or no Go file

Corrective Action: Correct the card in error or supply the proper card.

The SG5 Program

The SG5 program prepares the tape SIU that is used for incorporating the changes to the Macro, Create, and Relocatable libraries into the SOF, SGF, or Master File. This SIU includes the control cards required for the System Generation update run as well as the changes to be made to the system files.

Two options are available with the program, the OMIT option and the EDIT option. The OMIT option permits the user to incorporate changes to only as many modules as he chooses. However, he must be careful in choosing to omit any modification. *All IBM modification level changes are made on the assumption that all previous modification levels have been incorporated into the user's system files.* If the user omits any modification level change, he must make certain that later changes to his system files do not make his programs inoperable.

NOTE: SG5 automatically omits any attempt to make a change to a program not in the user's Macro, Create, or Relocatable Libraries; therefore, the user does not need to specify omission of a change to a module not on the system files.

The EDIT option gives the user a method of changing a Relocatable Library module on an SOF tape library other than IBMLIBR or to respecify the insertion point of a Relocatable Library module on the SOF.

In all cases, the input information supplied by the user is checked by the program to ensure a satisfactory run.

At the end of the SG5 run, the program prints a list of the element names that were put on the SIU for updating (see Figure 28). The elements are not necessarily listed in the order in which they were processed. The user can compare this list with the directory listing of the modification tape to check that the proper modifications were made.

Machine Requirements

The machine configuration required by SG5 depends upon the physical units on the user's system. A tape-oriented system requires at least three tape units. If the EDIT option is used, an additional tape unit is required. A disk-oriented system requires at least two tape units. If the EDIT option is used, an additional tape unit is required.

NOTE: The program can be run with a minimum disk system having only one tape unit available to the Operating System, but additional time is required for the SG5 run, and the tape reel must be changed during the run.

The modification tape for the SG5 run (supplied by IBM or prepared by the user with an SG4 run) must be mounted on the physical unit assigned to MW3. From the modification tape and the controlling SOF, SGF, or Master File, SG5 prepares a new tape SIU on MW1. The new SIU is the input tape for updating the user's system file. This SIU can be used only to update a system file that was used on the SG5 run or one that is exactly the same; therefore, a separate SIU should be prepared for updating each system file configuration.

SG5 opens the necessary system files as tape or disk, according to the physical equipment of the user's system. Figure 29 is a summary of the machine configuration and assignment requirements for SG5.

Control Cards

Several control cards define the operation of the SG5 program. Two types of control cards are required: a Monitor EXEQ control card and Pseudo Monitor control cards. Optional cards are also available to accommodate particular requirements of users.

The Monitor control card and the Pseudo Monitor control cards define the system to the program. They specify an SG5 execution and describe the job and the assignment of the physical units for the update run.

The optional cards are for those systems in which the configurations of the system files differ from those of the usual Operating System files. The control card for the OMIT option permits the user to omit updating of any of the program modules in the relocatable libraries. The cards used with the EDIT option permit the user to incorporate a change for a relocatable program on a system library other than that named IBMLIBR. In the case where the library has been rearranged, the change cards can be used to respecify the insertion point of a new module.

Insertions of new modules are made as specified by the SG1 or SG2 control cards. In the case of the Relocatable Library on a tape system, all insert statements with only one name are inserted at the end of IBMLIBR unless an EDIT pass has been performed to direct the insertion to another library.

```
GET        M 0014   GEN08      M 0011   IOKDF      M 0231   IBINDX1    R 0001   IBINDX2    R 0001
IBINDX3    R 0001   IBEXPFI    R 0001   IBEXPFF    R 0001   EXP        R 0001   IBCBLP2MF1 R 0520
IBFTN20    R 0328   IB1301DUMP R 0150   IBFILESAVE R 0176   IBFILEREST R 0158
```

Figure 28. Listing of Update Elements

USER'S PHYSICAL SYSTEM	FILE	SYMBOLIC UNIT	PHYSICAL UNIT TYPE
Normal Tape System	Modification Tape	MW3	Tape
	User's System File	SOF	Tape
	SIU Output File	MW1	Tape
(With EDIT option)	(Program Work File)	(MW4)	(Tape)
Normal Disk System	Modification Tape	MW3	Tape
	User's System Files	SOF	Disk
		LIB	Disk
	SIU Output File	MW1	Tape
(With EDIT option)	(Program Work File)	(MW4)	(Tape)
Minimum Disk System—with DMIN Parameter	Modification Tape	MW3	Tape
	Interim SIU	MW2	Disk
	User's System Files	SOF	Disk
		LIB	Disk
	SIU Output File	MW1	Tape—same unit as assigned to MW3
(With EDIT option)	(Program Work File)	(MW4)	(Tape—same unit as assigned to MW3 and MW1)

Figure 29. SG5 File Assignments

Monitor Control Cards

The following Monitor EXEQ control cards cause the execution of SG5. If the parameters specifying both the EDIT option and the minimum disk system are used, they can be in either order, but they must be the fourth and fifth parameters of the Monitor Execute card:

MON$$ EXEQ SG5
: This card directs SG5 to build a tape SIU to update the user's tape or disk system file. SG5 reads the modification tape on MW3, and writes the new tape SIU on MW1.

MON$$ EXEQ SG5,,,DMIN
: This card directs SG5 to build the tape SIU for updating a file on a minimum disk system and the user's Relocatable Library at LIB. The DMIN parameter indicates that the user's system has only one tape unit. SG5 reads the modification tape on MW3 and writes the SIU information on disk unit MW2. The program then enters a wait loop to permit a different tape reel to be mounted on the tape unit. (This unit must be assigned to MW1 as well as to MW3.) A message typed on the console typewriter indicates that the wait loop has been entered. When the tape reel is ready, the operator must enter a $50 message to break the wait loop and resume processing. SG5 then writes the tape SIU information on the tape unit.

MON$$ EXEQ SG5,,,EDIT
: This card permits the user to modify a Relocatable Library module on a system library other than IBMLIBR or to change any control card for the Relocatable Library. This Monitor control card tells SG5 that a special EDIT pass will change Relocatable Library control cards in the SG5 program supplied by IBM. The control cards that can be changed at the time of this EDIT pass are INSERR, DELETR, and REPLCR. *Every modification released by IBM is built to accommodate the Relocatable Library as it appeared on the last IBM Master file released.* When the customer receives the modification tape, he should check the enclosed list of Relocatable Library control cards. Every Class IV, Format 3 INSER card; Class IV, Format 2 DELET card; and Class IV, Format 2 REPLC card should be noted with care because the module identified by the second name on each of these statements must be located exactly where specified by the card. If any modules have been relocated, an EDIT pass must be performed to replace the control card supplied by IBM with cards describing the altered locations of the modules (see "Edit Control Cards" in this section). All Class IV, Format 2 insertions are made at the end of the Relocatable Library IBMLIBR unless the EDIT pass is made to direct the program to insert the module into another library.

Pseudo Monitor Control Cards

The Monitor EXEQ control card must be followed by Pseudo Monitor control cards. These control cards describe to SG5 the physical environment of the system for the update run. Note that, while the cards resemble Monitor control cards, the Pseudo Monitor *must not* contain MON$$ in columns 6 to 10. In the following card formats, xx represents tape physical units to be assigned by SG5, and yy represents disk physical units to be assigned by SG5.

```
16      21
ASGN    MDM,xx          (Optional, used for tape or
                         disk system)
JOB     Anyname
ASGN    MW1,xx          (Used for a tape system only)
ASGN    MW2,xx          (Used for tape or disk system)
ASGN    MR0,xx          (Used for a tape system only)
ASGN    MJB,xx or yy    (Used for tape or disk system)
ASGN    LIB,yy          (Used for a disk system only)
ASGN    SPR
EXEQ    SG1
EXEQ    SG2
```

Edit Control Cards

If the user must change the Relocatable Library control cards, he must specify an EDIT pass by using the EDIT parameter in the MON$$ EXEQ control card. He must also supply a card in the following format for each library control card being changed.

```
1     6        16      21
xxx   name1    yyyyy   R, name2
```

In the above control card format, *xxx* is the sequence number as it appears on the modification tape directory listing; *name1* is the name of the module affected by the change in the control card; *yyyyy* is the type

of card, either INSER, DELET, or REPLC; and *name2* is the second name on the system generation control card.

If a Class IV, Format 2 INSER card change is to be made to a library other than IBMLIBR, the EDIT card for that library must be preceded by the following card.

```
16      21
TLIB    libname
```

The name of the library in which the insertion is to be made is *libname*. No more than 50 TLIB cards can be included in any one deck.

Figure 30 is a summary of the EDIT control cards. If the EDIT parameter is used on the Monitor control card, at least one of the following cards (or set of cards) must appear in its proper place in the deck.

Col 1 Col 6	Col 16	Col 21	Comments
xxx namea	INSER	R,*newname1*	
xxx nameb	REPLC	R,*newname2*	
xxx namec	DELET	*R,newname3*	
	TLIB	*libname*	This set of cards directs *namen* to *libname* rather than to IBMLIB
xxx namen	INSER	R	

NOTE: Sequence numbers (*xxx*) must be in ascending sequence. They are obtained from the listing supplied with the modification tape.

Figure 30. Summary of EDIT Control Cards

OMIT Control Cards

The OMIT card specifies to SG5 which of the program modules residing on the user's system file are not to be updated. The OMIT card has the following format:

```
16      21
OMIT    ProgramA, ProgramB, ProgramC, . . . etc.
```

The operands starting in column 21 list the names of the Macro patches, Create packets, or Relocatable Library modules to be omitted in the updating.

Any replacement element included on the modification tape, but not on the user's SOF, is automatically omitted by SG5.

NOTE: If the user omits the updating of any IBM library modules on his system files, later changes to these libraries may make his programs inoperable unless a careful check is made at each succeeding modification level.

Control Card Sequence

The SG5 control cards must appear in the following sequence:

Monitor JOB card
Monitor ASGN cards
One Monitor EXEQ control card with all the necessary parameters
EDIT control cards (if any)
Pseudo Monitor cards describing the job and the physical system
OMIT cards (if any)

The Pseudo Monitor control cards that follow the Monitor Cards (and EDIT cards, if used) must be one of the following sets. The symbolic unit assignment must be as shown here; however, the physical unit assignment depends upon the user's system.

Tape System

```
16      21
ASGN    MDM,xx          (Tape unit, optional)
JOB     SG5 UPDATE
ASGN    MW1,A2          (Tape unit)
ASGN    MW2,B2          (Tape unit)
ASGN    MR0,A3          (Tape unit)
ASGN    MJB,B3          (Tape unit)
EXEQ    SG1
EXEQ    SG2
ASGN    SPR
```

Disk System

```
16      21
ASGN    MDM,xx          (Tape unit, optional)
JOB     SG5 UPDATE
ASGN    MW2,B2          (Tape unit)
ASGN    MJB,D3          (Disk unit)
ASGN    LIB,D2          (Disk unit)
EXEQ    SG2
ASGN    SPR
```

Examples of Control Card Decks

Figures 31, 32, 33, and 34, respectively, are examples of control card decks for a tape system, a tape system with EDIT modifications, a normal disk system, and a minimum disk system with EDIT modifications. The MON$$ JOB and MON$$ ASGN cards preceding the MON$$ EXEQ card are the normal control cards for the execution of any program (in this case, SG5). The Pseudo Monitor JOB and ASGN cards prepare assignments for the subsequent use of the SIU tape. The sequence numbers are obtained from the modification tape control card listing. No other sequence numbers should be used.

Messages

Both console and diagnostic messages are used in SG5. All diagnostic messages appear on the SPR; the message number, 11559, is printed on both the console typewriter and the SPR. Diagnostic messages indicate that there are one or more errors in the information supplied to the program by the user. The message on the SPR may indicate the corrective action to be taken. The following diagnostic messages are used:

```
6         16   21
MON$$      JOB  SG5 NORMAL TAPE SYSTEM
MON$$      ASGN MW1,A2              OUTPUT TAPE
MON$$      ASGN MW3,B5              MODIFICATION INPUT TAPE
MON$$      EXEQ SG5
           JOB  USER JOB NAME
           ASGN MW1,A2              ASSIGNMENTS FOR
           ASGN MW2,B2              SUBSEQUENT SYSTEM
           ASGN MJB,A3              GENERATION UPDATE
           ASGN MRO,B3              RUN
MON$$      END
```

Figure 31. Example for Tape System

```
1    6         16   21
     MON$$      JOB  SG5 TAPE UPDATE AND EDIT
     MON$$      ASGN MW1,A2              OUTPUT TAPE
     MON$$      ASGN MW3,B5              MODIFICATION INPUT TAPE
     MON$$      ASGN MW4,A3              WORK TAPE
     MON$$      EXEQ SG5,,,EDIT
003  PROGNAMEA REPLCR,PROGNAMEB          EDIT PHASE CONTROL CARD
017  PROGNAMEX DELETR,PROGNAMEY          EDIT PHASE CONTROL CARD
               TLIB USERLIB             EDIT PHASE CONTROL CARD
025  PROGNAMEZ INSERR                    EDIT PHASE CONTROL CARD
               JOB  USER JOB NAME
               ASGN MW1,A2              ASSIGNMENTS FOR
               ASGN MW2,B2              SUBSEQUENT SYSTEM
               ASGN MJB,B2              GENERATION UPDATE
               ASGN MRO,B3              RUN
               OMIT PROGNAME1,PROGNAME2
               OMIT PROGNAME4
     MON$$      END
```

Figure 32. Example for Tape System with EDIT

```
6         16   21
MON$$      JOB  SG5 DISK UPDATE
MON$$      ASGN MW1,A2              OUTPUT TAPE
MON$$      ASGN MW3,B5              MODIFICATION INPUT TAPE
MON$$      ASGN LIB,D5              DISK LIBRARY FILE
MON$$      EXEQ SG5
           JOB  USER JOB NAME
           ASGN MW2,B2              ASSIGNMENTS FOR
           ASGN LIB,D2              SUBSEQUENT SYSTEM
           ASGN MJB,D3              GENERATION UPDATE RUN
           OMIT PROGNAME1,PROGNAME2
MON$$      END
```

Figure 33. Example for Normal Disk System

```
1    6         16   21
     MON$$      JOB  SG5 DISK UPDATE
     MON$$      ASGN MW1,A2              OUTPUT TAPE
     MON$$      ASGN MW3,A2              MODIFICATION INPUT TAPE
     MON$$      ASGN MW4,A2              WORK TAPE
     MON$$      ASGN LIB,D1              SYSTEM LIBRARY FILE
     MON$$      ASGN MW2,D5              INTERIM SIU
     MON$$      EXEQ SG5,,,EDIT,DMIN
003  PROGNAMEA REPLCR,PROGNAMEB          EDIT PHASE CONTROL CARD
017  PROGNAMEX DELETR,PROGNAMEY          EDIT PHASE CONTROL CARD
025  PROGNAMEZ INSERR,PROGNAMEZ          EDIT PHASE CONTROL CARD
               JOB  USER JOB NAME
               ASGN MW2,A2              ASSIGNMENTS FOR
               ASGN LIB,D2              SUBSEQUENT SYSTEM
               ASGN MJB,D3              GENERATION UPDATE RUN
               OMIT PROGNAME1
     MON$$      END
```

Figure 34. Example for Minimum Disk System with EDIT

11559 UNCORRECTABLE I/O ERROR ON SYSTEM TAPE
Explanation: A read error occurred on the system tape.
Corrective Action: Run the job with a backup or with a new system tape.

11559 INCLD TABLE CAPACITY EXCEEDED
Explanation: The program attempted to make more than 300 entries in the table of program modules being modified (e.g. Autocoder, IBTRANSIT, etc.).
Corrective Action: Reduce the number of program modules on the SOF.

11559 TLIB DIRECTORY CAPACITY EXCEEDED
Explanation: The program has attempted to enter more than 50 EDIT operations in the TLIB Directory.
Corrective Action: Reduce the number of entries to the directory by reducing the number of TLIB card specifications and rerun the job.

11559 CONTROL CARD DECK IN ERROR – CORRECT AND RERUN
Explanation: There is an error in the card deck.
Corrective Action: Correct the deck and rerun the program.

11559 READ ERROR ON SIU
Explanation: A read error occurred on the SIU.
Corrective Action: See *Operator's Guide* for the standard procedure for SIU errors.

11559 ERRONEOUS EOF ON MW4
Explanation: No EOF should occur on MW4 during an EDIT run.
Corrective Action: Rerun after changing the tape on MW4.

11559 ERRONEOUS EOF ON MW3
Explanation: An erroneous EOF occurred on the modification tape during an EDIT run while SG5 was searching for a module.
Corrective Action: Check the EDIT control cards, correct, and rerun the job.

11559 CONTROL CARD ERROR
Explanation: A parameter on a control card has been entered incorrectly.
Corrective Action: Correct the card and rerun the job.

11559 ERRONEOUS EOF ON MW2
Explanation: During an EDIT pass or Disk SG5 run an EOF was sensed on MW2.
Corrective Action: Assign a larger portion of disk storage to MW2.

11559 TLIB CARD INVALID ON DISK SYSTEM
Explanation: No TLIB control card can be used for the Disk System.
Corrective Action: Correct the deck and rerun the job.

11559 UNCORRECTABLE I/O ERROR ON SYS DISK
Explanation: An uncorrectable I/O error occurred on a system file (SOF or LIB).
Corrective Action: Reload the system on disk and rerun the job.

11559 IMPROPER PARAMETER ON EXEQ CARD
Explanation: A parameter on an EXEQ card has been specified incorrectly.
Corrective Action: Correct the card and rerun the job.

11559 IMPROPER USE OF DMIN PARAMETER
Explanation: The DMIN parameter has been used incorrectly.
Corrective Action: Correct the card and rerun the job.

11559 INCOMPLETE ASSIGNMENTS CHECK DECK – RERUN
Explanation: One or more assignments have been omitted.
Corrective Action: Correct the deck and rerun the job.

11559 OMIT CARD IN ERROR – CORRECT AND RERUN
Explanation: There is an error in an OMIT card.
Corrective Action: Correct the card and rerun the job.

11559 OMIT MODULE NOT IN DIRECTORY
Explanation: SG5 did not find a module specified for omission.
Corrective Action: Check the deck against the modification tape listing, correct the card, and rerun the job.

11559 JOB CARD MISSING – CORRECT AND RERUN
Explanation: A JOB card has been omitted.
Corrective Action: Insert the correct JOB card into the deck and rerun the job.

11559 NO MDM IN SYSTEM – CORRECT AND RERUN
Explanation: An ASGN MDM card has been read; however, there are no MDM facilities in the system.
Corrective Action: Remove the ASGN MDM card and rerun the job.

11559 INVALID ASGN CARD – CORRECT AND RERUN
Explanation: An invalid ASGN card was included in the deck.
Corrective Action: Correct the card and rerun the job.

11559 NO ASGN CARDS – CORRECT AND RERUN
Explanation: The ASGN cards were omitted from the control deck.
Corrective Action: Insert the ASGN cards into the deck and rerun the job.

11559 UNCORRECTABLE ERROR ON INPUT TAPE
Explanation: The input tape has a read error.
Corrective Action: Rerun the job with a new modification tape.

In addition to the diagnostic messages, the following console typewriter messages may appear:

11558 REPLACE MW3 WITH SCRATCH TAPE – ENTER $50
Explanation: This message appears when the DMIN parameter is used on the Monitor EXEQ control card. It indicates that the program is ready for the scratch tape to be mounted.
Corrective Action: Replace the modification tape with a scratch tape and enter $50 to discontinue the wait loop.

11560 UPDATE SIU ON MW1
Explanation: This message indicates end of job and gives the location of the new SIU.

Appendix A: Maintaining the History File with the SG3 Program

The History file, supplied by IBM as an optional item, contains all of the Autocoder statements (in the form of blocked-record symbolic program decks) that make up the programs and modules contained on the Master file. The SG3 program is used to maintain the History file.

The SG3 program is executed in a standard job run. It cannot be run during System Generation.

A user can obtain a new History file with SG3 by:

1. Placing new subprograms (in the form of Autocoder, FORTRAN, or COBOL symbolic decks) onto the History file.
2. Updating an old History file by inserting and deleting individual symbolic statements.
3. Copying or merging information from one or more History files. The new History file is produced by a combination of copying and updating or by merging several old History files.

NOTE: A file of compiler input statements also can be produced when the new History file is being created. This file serves as input for the appropriate (Autocoder, FORTRAN, or COBOL) processor for an assembly or compilation of the updated file. Only one FORTRAN or COBOL source program can be placed on the compiler input file; any number (limited only by the physical capacity of the file) of Autocoder source programs may be placed on the file.

Additional features, such as the listing and/or punching of the new History file, are discussed under "Control Cards."

Program Input and Output Requirements

The input/output assignments and input/output formats associated with the SG3 program are indicated below.

Input Units

1. Control cards, cards for new subprograms to be added to the History file, and cards for updating subprograms already on the History file are placed on the SIU.
2. The old History file is assumed to be on work file MW4. If the user desires, the old History file may be placed on another work file (MWn), or on a reserve file (MRn), specified for his system at System Generation time. The optional file is specified on the control card for the subprogram being copied or updated.

NOTE: Work files MW5 and/or MW6 may be required for output as explained below.

Input Format

1. Monitor control cards are in the format standard for the Operating System. SG3 control cards are in the format described under "Control Cards." Cards for new subprograms, or updating cards for existing subprograms, are in the input format defined for the applicable symbolic language.
2. The old History file is blocked, 25 card images per physical record.

Output Units

1. A new History file, if specified, is always produced on work file MW5. No other work or reserve file may be substituted for MW5.
2. The compiler input file, if specified, is always produced on work file MW6. No other work or reserve file may be substituted for MW6.

Output Format

1. The new History file is blocked, 25 card images per physical record.
2. The compiler input file consists of (unblocked) card-image records.

Machine Configuration Requirements

SG3 requires: (1) the SOF plus a *minimum* of two additional tape units, a card reader, and the Standard Print Unit, or (2) the SOF plus a *minimum* of four additional tape units. The minimum configuration has the following restrictions:

1. Two runs are required if both a new History file and a compiler input file are desired. The first run updates the old History file. The second run creates the compiler input file. With an additional work file, these two functions may be performed in one run.
2. Merging of History files cannot be performed with the minimum configuration. An additional work file is required for each file to be merged with the old History file.

NOTE: The Standard Punch Unit is required if the user elects to punch his new History file.

Control Cards

Four types of control cards may be directed to the SG3 program:

1. COPY, to copy one or more subprograms from an old History file onto the new History file.

2. UPDATE, to add new subprograms to, or change subprograms already on, an old History file. In either case, a new History file is produced. To update a subprogram that appears on an old History file, the UPDAT card must be followed by groups of cards, each group consisting of an Insert/Delete control card followed by source cards (if any) that are to be inserted. The UPDAT card also contains the specifications for the several SG3 options, e.g., printing the new History file.

3. Insert/Delete, to insert symbolic cards into, or delete symbolic cards from, the subprogram specified by the immediately preceding UPDAT card.

NOTE: Insertion or deletion of symbolic cards in or from a FORTRAN source program is made on the basis of pseudo sequence numbers of the cards in the source program. Pseudo sequence numbers are necessary because there is no provision in the FORTRAN language to assign a sequence, page-and-line, or similar number to a source card. To enable updating a FORTRAN program, the user must first place the program on the History file by using the UPDAT card SIU option, and request a listing of that program by placing an L in column 10 of the UPDAT card. The listing thus obtained for the FORTRAN program placed on the History file will contain a pseudo sequence number for each card in the FORTRAN program; these numbers never appear in records on the History (or any other) file; they are printed only on the listing. When updating a FORTRAN program, SG3 maintains a count of cards read, thereby simulating the pseudo sequence numbers that appear on the listing. Because updating a FORTRAN program may alter the pseudo sequence numbers assigned, the user should specify that the updated FORTRAN program be listed so that he can have the new set of pseudo sequence numbers available for future updating.

4. Comment, to place descriptive information onto the SPR during execution of SG3.

The following control card discussions refer to *sequence numbers* and *revision letters.*

Sequence Number: This is a card sequence number of five characters from 0001A through 99989 that is placed in columns 1 through 5 of the output records produced by SG3. When the History file is updated, new sequence numbers are assigned unless the user elects otherwise (column 9, UPDAT card).

Revision Letter: This is a single-character code (A through Z) that indicates the level of modification of each subprogram on the History file. The code is carried in the header record produced by SG3 for each program on the History file. The code is placed in a comment card when the user specifies that the program be placed on the compiler input file. The code also appears in the table of contents produced by SG3 when a new History file is created. The revision letter may be used to ensure that updates are performed sequentially. The user may specify in columns 4 and 5 of the UPDAT card that the revision letter on the old History file be compared to the revision letter he provides in the UPDAT card, that the revision letter be reset to A, etc. The revision letter is usually advanced by one letter (e.g., A to B, B to C, Y to Z, Z to A, etc.) each time a program is updated. However, this alteration of the revision letter may be overridden by specifications in columns 4 and 5 of the UPDAT card.

NOTE: Version 3 and later versions of the Operating System contain a revised SG3 program. When using the new SG3 program to update for the first time any program placed onto the History file by the old SG3 program, the user must give careful attention to coding the sequence numbers on which updating is based. The sequence numbers coded for the first update must exactly match those contained on the old History file; these numbers must include the revision letter appended to the four-digit sequence numbers by the old SG3 program. During the first update run, the new SG3 program resequences the cards in the program and eliminates the revision letter. The new SG3 program allows a five-character sequence number that excludes the revision letter. In the new SG3 program, the revision letter is carried in the program header record instead of being appended to each sequence number.

Copy Card

CARD COLUMN	CONTENTS	EXPLANATION
1	$	Indicates SG3 control card.
2-5	Blank	Not used.
6-8	MWn or MRn	Location of the old History file; may be any unit specified for the system at System Generation time.
	Blank	If blank, SG3 assumes the old History file to be on MW4.
9	Blank	Not used.
10	L	The subprograms being copied from the old History file are to be printed on the Standard Print Unit.
	Blank	No printing.
11	P	The subprograms being copied from the old History file are to be punched on the Standard Punch Unit.
	Blank	No punching.
12	H	The subprograms are to be copied from the old History file (location specified in columns 6-8) onto the new History file on MW5.
	Blank	If there are any entries in columns 6-15, the old History file is not copied onto a new History file. If columns 6-15 are blank, the subprograms on the new

CARD COLUMN	CONTENTS	EXPLANATION
		History file on MW5 are automatically copied from the old History file on MW4. There is no printing or punching.
13-15	Blank	Not used.
16-20	COPY	Type of card.
21-75	*name*	This is the name of the subprogram being copied with the options specified in columns 6-12. In the case of subprograms previously added to the History file by means of the UPDAT card SIU option, *name* is the entry beginning in column 21 of that card.
	name1, name2	This entry (comma required) causes subprograms *name1* through and including *name2* to be copied from the old History file onto the new.
76-80	Blank	Not used.

Updat Card

CARD COLUMN	CONTENTS	EXPLANATION
1	$	Indicates SG3 control card.
2,3	Blank	Not used.
4,5	$$	If there is a $ in column 4 *and* in column 5, the revision letter for this program is set to A.
	Blank $	If column 4 is blank and column 5 contains a $, the revision letter is not checked, but is advanced by one letter.
	Blank X	X is any alphabetic character. If column 4 contains a blank and column 5 contains any alphabetic character, that alphabetic character is compared to the revision letter in the header record for this program. If the alphabetic character is equal to the revision letter, the updating proceeds normally, and the revision letter is advanced by one letter. If the alphabetic character is not equal to the revision letter, the job is terminated, and the revision letter is not altered.
	*$	If column 4 contains an * and column 5 contains a $, the revision letter is neither checked nor advanced.
	*X	X is any alphabetic character. If column 4 contains an * and column 5 contains any alphabetic character, the alphabetic character is compared to the revision letter in the header record for this program. If the alphabetic character is equal to the revision letter, the updating proceeds normally, but the revision letter is not advanced. If the alphabetic character is not equal to the revision letter, the job is terminated, and the revision letter is not altered.
6-8	MWn or MRn	Location of the old History file; may be any work or reserve unit specified for the system at System Generation time.
	Blank	If blank, SG3 assumes the old History file to be on MW4.
	SIU	This entry indicates that a new subprogram is to be added to the History file. The cards containing the source statements follow the UPDAT card in the SIU.
9	N	New sequence numbers are not assigned for statements on the new History file.
	Blank	New sequence numbers are to be assigned for statements on the new History file.
10	L	This subprogram on the new History file is to be printed on the Standard Print Unit.
	Blank	No printing.
11	P	This subprogram on the new History file is to be punched on the Standard Punch Unit.
	Blank	No punching.
12	H	The subprogram named beginning in column 21 of this card is to be written onto the new History file on symbolic unit MW5.
	Blank	No History file is to be written if there is any entry in columns 6-15. If columns 6-15 are all blank, the subprogram is to be written on both the compiler input file and the new History file.
13	A	Write card-image records to form Autocoder input file on MW6 for later assembly.
	F	Write card-image records to form FORTRAN input file for later compilation.
	C	Write card-image records to form COBOL input file for later compilation.
	Blank	No compiler input file is produced.
14	1-7	If column 13 contains an A, the SG3 program produces an EXEQ AUTOCODER card-image record for each UPDAT card processed. This card specifies the options for the Autocoder assembly of the subprogram named in columns 21-30. All options for this card, except the NOFLG option, are specified by the entry in column 14. The column 14 options for the (SG3-produced) EXEQ AUTOCODER card follow and are explained in the publication *IBM 1410/7010 Operating System; System Monitor,* Form C28-0319. 1-NOPRT 2-NOPCH 3-NOPRT,NOPCH 4-NOMAC 5-NOPRT,NOMAC 6-NOPCH,NOMAC 7-NOPRT,NOMAC,NOPCH NOTE: SG3 produces no EXEQ card for the first UPDAT card (and the updating cards associated with it) processed. Options for the assembly of a single subprogram, or the first of two or more subprograms, are specified on the MON$$ EXEQ AUTOCODER card provided by the user. This card must follow the last UPDAT card, with its related updating cards, in the SIU.
	Blank	No Autocoder options.
	F	Indicates to SG3 that a FORTRAN History file is being maintained.
	C	Indicates to SG3 that a COBOL History file is being maintained.

CARD COLUMN	CONTENTS	EXPLANATION
15	N	If an A is specified in column 13, an N in this column indicates the NOFLG option when this subprogram named beginning in column 21 is later assembled in accordance with the SG3-produced EXEQ card (refer to column 14 explanation).
	Blank	No option.
16-20	UPDAT	Type of card.
21-75	*name*	This is the name of the subprogram being updated with the options specified in columns 4 through 13. The *name* must be left-justified in column 21 and must not exceed ten alphameric characters. The first character of *name* must be an alphabetic character. If columns 6-8 contain "SIU," the *name* is placed on the History file to identify the subprogram that is being added. This *name* is used for all subsequent COPY and UPDAT cards to identify the subprogram.
73-80 or 76-80†	Not Blank	The contents of these columns are placed into the Identification field (columns 73-80 or 76-80) of the History file and/or compiler input file for each card in the subprogram.
	Blank	The Identification field of the subprogram is carried unchanged.

†Columns 73-80 for FORTRAN or COBOL; columns 76-80 for Autocoder.

Insert/Delete Card

Insert/Delete cards pertain to the subprogram designated on the last preceding UPDAT card. An Insert/Delete card directs SG3 to insert the immediately following symbolic cards into (or delete symbolic cards from) the subprogram specified on the UPDAT card. The point at which the insertion or deletion is to be made is specified on the Insert/Delete card. (A request to delete a nonexistent card causes the next symbolic card to be deleted.)

CARD COLUMN	CONTENTS	EXPLANATION
1	$	Indicates SG3 control card.
2-12	XXXXX	The symbolic cards that follow this control card are to be inserted into the subprogram named on the last preceding UPDAT card. Within the subprogram, the insertion is to be made immediately following the subprogram card identified by sequence number XXXXX. This sequence number is a one- to five-digit number, written free form, left-justified (e.g., 829 or 2932).
	XXXXX, YYYYY	The cards with sequence numbers from XXXXX through YYYYY are deleted from the subprogram named in the last preceding UPDAT card and replaced by the symbolic cards (if any) that follow this control card. The sequence number is a one- to five-digit number written free form, left-justified. The sequence numbers XXXXX and YYYYY must be separated by a comma.
13-80	Blank	Not used.

Example 1: $25 beginning in column 1 means: Insert the symbolic cards following this control card into the output file(s) behind the card with sequence number 00025.

Example 2: $4310A,43769 beginning in column 1 means: Delete cards with sequence numbers 4310A through 43769 and insert the symbolic cards following this control card in place of the deleted cards on the output file(s).

Comments Card

CARD COLUMN	CONTENTS	EXPLANATION
1	$	Indicates SG3 control card.
2-5	Blank	Not used.
6	*	Indicates Comments card.
7-80	*comments*	The contents of this field are printed on the Standard Print Unit when encountered during execution of the SG3 program.

SG3 Execute Record

The Monitor EXEQ control card required to execute SG3 is in the format that is standard for the Operating System:

```
6          16     21
MON$$      EXEQ   SG3,P2,P3
```

where the second and third parameters (P2 and P3) are described in the *System Monitor* publication. If this format of the EXEQ card is used, the user must include UPDAT, COPY, and Insert/Delete cards to direct the SG3 program, and Comments cards to place comments onto the SPR.

SG3 permits a fourth EXEQ card parameter, COPY. The format of an EXEQ card containing this fourth parameter (and omitting the second and third parameters) is:

```
6          16     21
MON$$      EXEQ   SG3,,,COPY
```

The COPY parameter on the EXEQ card may be used to cause copying of an entire History file when no updating is to be performed. If only the copy function is desired, no additional control cards are required. The History file to be copied is assumed to be on work file MW4; the new History file is written on work file MW5. Because of the absence of additional control cards, no SG3 options (e.g., writing a compiler input file) are available.

With certain restrictions, the COPY parameter may also be used on the EXEQ card which initiates SG3 proc-

essing for a run during which updating is to be performed. The appropriate UPDAT, Insert/Delete, and Comments control cards must follow the EXEQ card. No COPY control cards are required, because the COPY parameter in the EXEQ card causes copying of all subprograms not updated from the old History file to the new.

The following restrictions apply to the use of the COPY parameter on the EXEQ card for an SG3 run during which updating is to be performed.

1. Only a single History file may be updated and copied; that History file must be on work file MW4.
2. No UPDAT control card with the SIU parameter is permissible; i.e., no new subprograms may be added to the History file.
3. COPY control cards cannot be used.

Example

Figure 35 illustrates the use of SG3 control cards to include a new subprogram on the new History file, to update a subprogram on the old History file, and to copy a subprogram from the old History file to the new History file. Monitor and Linkage Loader control cards are also shown; they specify assembly (assuming Autocoder subprograms) of two of the subprograms handled by SG3, and execution of one of the two programs assembled. Following is a brief explanation of the control cards.

The first packet of control cards (JOB through EXEQ) assigns a name to the job, declares mode GO, assigns required input/output units, and causes execution of SG3. The first UPDAT card causes SG3 to:

1. Read a new subprogram, SAMPLE1, from the SIU.
2. Place SAMPLE1 on the new History file on MW5.
3. Place SAMPLE1, an Autocoder subprogram, on the compiler input file on MW6.
4. List SAMPLE1 on the SPR, and punch it on the SPU.

The second UPDAT card causes SG3 to:

1. Update SAMPLE2, a subprogram on the old History file on MW4, and place the updated version of SAMPLE2 on the new History file following SAMPLE1.
2. Place SAMPLE2, an Autocoder subprogram, on the compiler input file following SAMPLE1.

Insert/Delete cards $24 and $35,46 indicate where the modifications in SAMPLE2 are to be made. Updating symbolic cards are placed in the SIU as indicated by the comment cards in the example.

The COPY card causes SAMPLE3 to be copied from MW4 to MW5, the new History file.

The EXEQ AUTOCODER card causes SAMPLE1 and SAMPLE2 to be assembled from the compiler input file (MW6) and placed on the Go file.

The EXEQ LINKLOAD card and the following two cards cause SAMPLE2 to be placed onto the Job file.

The EXEQ PROGRAMA card causes SAMPLE2 to be executed from the Job file.

Trailer Label for History File

A standard 120-character trailer label is added to the end of each new History file created by SG3. The trailer is in the following format:

1EOR (positions 1 through 4 of the record)
nnnnnn (block count in position 67 through 72 of record)

Heading for Listing Page

The following header is placed on a listing of a new History file produced by SG3:

DATE . . . xxxxx *****SG3 LIST ***** PAGE ... nnn

where xxxxx is the date in year-day format, and nnn is the page number.

```
     MON$$      JOB  HISTFILE
*** MONITOR ASSIGNMENT CARDS ***
     MON$$      ASGN MJB,A1
     MON$$      ASGN MGO,B2
     MON$$      ASGN MW4,A6
     MON$$      ASGN MW5,A2
     MON$$      ASGN MW6,A3
     MON$$      MODE GO
     MON$$      COMT BUILD HISTORY FILE CONSISTING OF SAMPLE1 FROM SIU
     MON$$      COMT AND SAMPLE2 + SAMPLE3 FROM EXISTING HISTORY FILE.
     MON$$      EXEQ SG3
$  $$SIU LPHA   UPDATSAMPLE1
          (INSERT SYMBOLIC CARDS FOR HISTORY FILE.)
$    $           UPDATSAMPLE2                                    NEWID
$24
          (SYMBOLIC CARDS TO BE INSERTED FOLLOWING CARD 24
           OF SAMPLE2 ARE PLACED HERE.)
$35,46
          (DELETE CARDS 35 THROUGH 46.
           SYMBOLIC CARDS TO BE INSERTED BEFORE CARD 47
           OF SAMPLE2 ARE PLACED HERE.)
$           COPY SAMPLE3
     MON$$      COMT EXECUTE AUTOCODER TO COMPILE SAMPLE1 + SAMPLE2
     MON$$      EXEQ AUTOCODER,,MW6
     MON$$      COMT EXECUTE LINKLOAD TO BUILD A JOB FILE
     MON$$      EXEQ LINKLOAD
                PHASEPROGRAMA
                CALL SAMPLE2
     MON$$      COMT EXECUTE PROGRAMA
     MON$$      EXEQ PROGRAMA,MJB
*** DATA CARDS - OPTIONAL ***
     MON$$      END          OR
     MON$$      JOB  NEXT JOB
```

Figure 35. Control Cards for Sample Job Using SG3

SG3 Diagnostic Messages

SG3 may produce several diagnostic messages, which are placed on the console typewriter and/or the SPR. These messages, grouped according to the unit(s) on which they appear, are explained below.

Console Typewriter and SPR

The following messages appear on both the console typewriter and the SPR. Message text alone is typed on the console typewriter; both message text and the contents of the erroneous card are placed on the SPR. Actions to be taken are indicated at the end of the explanations of the messages. For details on the "Console Inquiry" action, see "On Console Typewriter Only."

11540 DIAGNOSTIC END 01
Explanation: Designation of work/reserve file for History file residence is invalid. Only Monitor work/reserve files incorporated into the system at System Generation time are valid.
Action: Correct card and rerun job.

11540 DIAGNOSTIC END 02
Explanation: Revision letter specified in control card does not match that in header for subprogram.
Action: Console Inquiry.

11540 DIAGNOSTIC END 03
Explanation: Subprogram requested is not on History file.
Action: Correct card and rerun job.

11540 DIAGNOSTIC END 04
Explanation: No $ in column 1 of control card.
Action: Correct card and rerun job.

11540 DIAGNOSTIC END 05
Explanation: Card should be COPY or UPDAT card.
Action: Console Inquiry.

11540 DIAGNOSTIC END 06
Explanation: Column 13 of UPDAT card contains invalid character. Valid characters are: F, C, A, and blank.
Action: Console Inquiry.

11540 DIAGNOSTIC END 07
Explanation: Column 12 of UPDAT card contains invalid character. Valid characters are: H and blank.
Action: Correct card and rerun job.

11540 DIAGNOSTIC END 08
Explanation: Column 11 of UPDAT card contains invalid character. Valid characters are: P and blank.
Action: Console Inquiry.

11540 DIAGNOSTIC END 09
Explanation: Column 10 of UPDAT card contains invalid character. Valid characters are L and blank.
Action: Console Inquiry.

11540 DIAGNOSTIC END 11
Explanation: Control card contains no subprogram name.
Action: Console Inquiry.

11540 DIAGNOSTIC END 12
Explanation: Sequence number in last card read is in error.
Action: Correct card and rerun job.

On Console Typewriter Only

One message, directed to the operator and requesting a console inquiry for a 11540 DIAGNOSTIC END nn message, is typed only on the console typewriter. That message is:

11541 ENTER $3P or $3S

The $3P response will cause the erroneous card to be ignored, and the run to proceed normally.

The $3S response will cause processing to be terminated, and the remaining control cards to be checked. Errors found in checking control cards after processing is terminated are indicated by diagnostic messages and discussed in the following section.

On SPR Only

The following messages are put onto the SPR only. Messages 11542 through 11545 may be produced during the normal processing of SG3. Message 11546 is produced only when checking control cards after termination of normal SG3 processing. The contents of the erroneous cards follow the 11546 messages.

MESSAGE	EXPLANATION
11542 UNCORRECTABLE I/O ERROR ON OLD HISTORY	SG3 is unable to read the old History file; the run is terminated.
11542 UNCORRECTABLE I/O ERROR ON NEW HISTORY	SG3 is unable to read the new History file; the run is terminated.
11542 UNCORRECTABLE I/O ERROR ON SIU INPUT RECORD	SG3 is unable to read the Standard Input Unit; the run is terminated.
11543 THIS RUN HAS BEEN DIAGNOSTICALLY TERMINATED. THE LAST FILE IS POSSIBLY ERRONEOUS.	The run has been terminated. The last subprogram on new History file may be invalid.
11544 400 PROGRAM CAPACITY OF FILE HEADER TABLE HAS BEEN EXCEEDED.	Capacity of History file (400 subprograms) exceeded; the run is terminated.
11545 UNEXPECTED END OF FILE ON MWx.	Unexpected end-of-file condition on MW5 or MW6. The capacity of the new History file or the compiler input file is exceeded; the run is terminated.
11546 **** ERROR 01 IN FORMAT OF CARD	Sequence field of last card read is in error.
11546 **** ERROR 02 IN FORMAT OF CARD	Column 13 of UPDAT card contains invalid character. Valid characters are: A, F, C, and blank.
11546 **** ERROR 03 IN FORMAT OF CARD	Column 12 of UPDAT card contains invalid character. Valid characters are: H and blank.
11546 **** ERROR 04 IN FORMAT OF CARD	Column 11 of UPDAT card contains invalid character. Valid characters are; P and blank.
11546 **** ERROR 05 IN FORMAT OF CARD	Column 10 of UPDAT card contains invalid character. Valid characters are: L and blank.

MESSAGE	EXPLANATION
11546 **** ERROR 06 IN FORMAT OF CARD	Designation of work/reserve file (in columns 6-8 of UPDAT or COPY card) for History file residence is invalid. Only those Monitor work/reserve files incorporated into the system at System Generation time are valid.

Appendix B: Operating System Core-Storage Requirements

The values below provide guidelines to estimate the core-storage requirements for an Operating System. The figures are subject to change as modifications are made to the system. (New figures will be published should a change of more than ten percent occur.)

Resident Monitor Requirements

	CORE-STORAGE LOCATIONS REQUIRED
Basic Resident Monitor	
NOTE: These figures include all index registers (and floating-point areas).	
Completely tape-oriented, 1-channel IOCS	7,825
Completely 1301/2302 disk-oriented, 1-channel IOCS	11,660
NOTE: The disk-oriented Monitor includes the 1301/2302 disk IOCS routines.	
Tape-oriented with 1301/2302 disk capabilities, 1-channel IOCS	9,340
Additional 1301/2302 disk IOCS channels	600 each
Additional 1301 disk IOCS channels	350 each
Optional System Functions	
Standard Print Unit	
Unit-record	280
NOTE: When the Standard Print Unit and/or Standard Punch Unit are specified as unit-record equipment, the IOCS unit-record routine must be included. If an IBM 1442 Card Reader is specified at System Generation, an additional 24 positions of core storage are needed.	
Tape Unit	260
NOTE: The following file assignment core-storage sizes must be added where applicable:	
Each symbolic unit—5	
Each unit-record device—9	
Each tape unit (MDM specified)—14	
Each tape unit (MDM not specified)—9	
Each disk area—20	
Variable unit	320
Standard Punch Unit	
Unit-record	240
NOTE: When the Standard Print Unit and/or Standard Punch Unit are specified as unit-record equipment, the IOCS unit-record routine must be included. If an IBM 1442 Card Reader is specified at System Generation, an additional 24 positions of core storage are needed.	
Tape unit	260
NOTE: The following file assignment core-storage sizes must be added where applicable:	
Each symbolic unit—5	
Each unit-record device—9	
Each tape unit (MDM specified)—14	
Each tape unit (MDM not specified)—9	
Each disk area—20	
Variable unit	270
Core-Image file capability	50
NOTE: The following file assignment core-storage sizes must be added where applicable:	
Each symbolic unit—5	
Each unit-record device—9	
Each tape unit (MDM specified)—14	
Each tape unit (MDM not specified)—9	
Each disk area—20	
NOTE: When MDM (Core Image file) is specified, IOCS Checkpoint routine must be included.	
Labeled system files (80 or 120 characters)	40
NOTE: When labeled system files are specified, the corresponding (80- or 120-character) IOCS label routine must be included.	
Alternate Input Unit (AIU) capability	150
Snapshot	2,000
NOTE: Because Snapshot begins at an even-hundred core-storage location, up to 99 additional core-storage positions may be required.	
Optional IOCS Routines	
Unit-record	250
NOTE: When the Standard Print and/or Standard Punch Unit are specified as unit-record equipment, the IOCS unit-record routine must be included. If an IBM 1442 Card Reader is specified at System Generation, an additional 24 positions of core storage are needed.	
80-character tape labels	1,225
NOTE: When labeled system files are specified, the corresponding (80- or 120-character) IOCS label routines must be included.	
120-character tape labels	1,445
NOTE: When labeled system files are specified, the corresponding (80- or 120-character) IOCS label routine must be included.	
Label exit routine	350
Tape error statistics	575

	CORE-STORAGE LOCATIONS REQUIRED
Implementation of user-written service routines	445
Checkpoint, IBM 7330 Tape Units not specified	410
NOTE: When MDM (Core Image file) is specified, IOCS Checkpoint routine must be included.	
Checkpoint, IBM 7330 Tape Units specified	460
NOTE: When MDM (Core Image file) is specified, IOCS Checkpoint routine must be included.	
Shared Disk	
Type A Generation	
First channel	300
Each additional channel	240
Type B Generation	
First channel	250
Each additional channel	190
Type C Generation	
First channel	90
Each additional channel	90
Type D Generation	
First channel	350
Each additional channel	270

Optional Resident Monitor Requirements for TP

Extension of IOCS	1,650
One of the following Supervisors:	
No dump and restore capability	3,400
Tape dump and restore capability (TPTAPEDUMP)	1,303
Disk dump and restore capability (TPDISKDUMP)	1,440
Tele-processing only	3,470
TPBASSUPER	4,400
"Start" and "end" modules, 1-channel TP	58
Additional "start" and "end" modules for the second TP channel	58
For device indicated:	
Programmed Transmission Control	2,770 per channel
IBM 1050 Data Communications System	1,400 per adapter
IBM 1414, Model IV or V with IBM 1009 Data Transmission Unit	2,090 per adapter
IBM 1414, Model IV or V with IBM 1014 Remote Inquiry Unit	1,250 per adapter
IBM 1414, Model IV or V with Telegraph Terminal Unit	1,170 per adapter
One of the following load programs:	
Absolute tape loader	4,400
Absolute 1301 disk loader	6,110
Relocatable tape loader	6,580
Relocatable 1301 disk loader	6,320

NOTE: TP Directory requires 20 positions of core storage for each memory map entry and 14 positions for each directory entry.

Optional Resident Monitor Requirements for SPOOL

	CORE-STORAGE LOCATIONS REQUIRED
Type I SPOOL	
Using IBM 1402 Card Read Punch only (CRD)	950 per channel
Using IBM 1402 Card Read Punch and IBM 1403 Printer (ALL)	1,225 per channel
Type II SPOOL	1,300 per channel
Type III SPOOL	3,200 for channel 1,250 for second channel

NOTE: The stated figures do not include the number of positions that are required for a user-written editing routine. The Type II SPOOL figure should be used for both Type II and Type III SPOOL in a TP system.

Basic Resident Monitor Requirements for 1311 Disk

	ADDITIONAL CORE-STORAGE LOCATIONS	
	SEQUENTIAL AND NONSEQUENTIAL (NO 6TH IOKDF OPERAND)	NONSEQUENTIAL ONLY (6TH IOKDF OPERAND)
First channel with 1311, Resident Monitor with tape-processing facilities only	2,800	1,600
First channel with 1311, Resident Monitor with tape and 1301/2302 processing facilities	2,350	1,300
Second channel with 1311	750	750

Optional 1311 Label Routines

100-character disk label routines, if 120-character tape label routines have not been included in Resident Monitor	900
100-character disk label routines, if 120-character tape label routines have been included in Resident Monitor	350
1311 label exit routines, if tape label exit routines have not been included in Resident Monitor	300
1311 label exit routines, if tape label exit routines have been included in Resident Monitor	50

Nonresident Requirements

	CORE-STORAGE LOCATIONS REQUIRED	
	TAPE ORIENTED	DISK ORIENTED
Compilers		
Autocoder	19,000	20,050
NOTE: All remaining available core storage is used by Autocoder as follows: 70% for label table; 30% for literal table.		
COBOL	28,500	38,950
NOTE: All remaining available core storage is used by COBOL for tables.		
FORTRAN	26,550	35,550
NOTE: All remaining available core storage is used by FORTRAN for tables.		
File Organization System		
System Definition	5,000	
File Organization	4,000 to 43,300 (min. UNLOAD) (max. ADD)	
Extended IOCS Modules	7,000 to 10,150	

NOTE: Each file table relating to an organized file includes a 270 position file table prefix in addition to the standard file table of 45 to 57 positions.

	CORE-STORAGE LOCATIONS REQUIRED
Utility Programs	
Snapshot	2,000
Storage Print	8,000
Tape Print	7,000
Disk Print (1301, 2302, 1311)	11,100
1301 Format/Address Generator	14,000
2302 Format/Address Generator	13,000
File Save program	20,000
File Restore program	18,500
Data File Generator	19,400
1311 Format/Address Generator	8,500
1311 Disk Label Program	7,500
Random-Processing Scheduler	
Basic	3,300
DEFSA macro	180
MVRSA macro	250
PUT macro	375
FSEQP macro	850
Output only	180
Each 1301 disk module	13
Additional Tele-processing Programs	
TPATLIBGEN	17,140
LINKLOADRT	20,500
TPADLIBGEN	14,840
LINKLOADRD	22,800
TPLDDCP1	500
TPLDDCP2	500
1311 Scan Feature	450
1311 Cylinder overflow routines	500
Linkage Loader	
Tape	25,600
1301/2302 Disk Storage	30,200
System Generation, Tape or 1301/2302	
Disk Storage	27,000
Transitional Monitor	
Tape-oriented system	13,340
Disk-oriented system	15,250
POWTRAN	1,500
Core Image file capability	670
Restart	
1-channel IOCS	3,500
NOTE: When Restart is desired, IOCS Checkpoint routine must be specified.	
Additional IOCS channels	600 each
Depending upon inclusion of some or all optional system functions (excluding Snapshot)	25 to 625

NOTE: The following file assignment core-storage sizes must be added where applicable:

Each symbolic unit—5
Each unit-record device—9
Each tape unit (MDM specified)—14
Each tape unit (MDM not specified)—9
Each disk area—20

Appendix C: IOCS Timing Estimates

Timing estimates for the IOCS can be made from the following information. These timings do not take into account exceptional conditions (e.g., busy and not ready conditions) on the I/O devices.

SCHEDULING FUNCTIONS (NOTE 1)	TIMING IN MICROSECONDS IBM 1410	IBM 7010
1. Blocking/unblocking of GET or PUT, time per record (NOTE 2):		
a. GET or PUT, Form 2 data records	370	130
b. GET, Form 4 data records	370	130
c. PUT, Form 4 data records	595	210
2. GET FILE:		
a. One IORW is sent to a read/write list; file consists of unblocked records; not preceded by a GET FILE, DEFER	2,747	879
b. GET FILE following a GET FILE,DEFER; file consists of unblocked records	1,274	408
c. *Additional* time for a GET FILE if file consists of blocked records	486	155
d. *Additional* time for a GET FILE if file is on IBM 1301 Disk	683	228
3. GET FILE,DEFER	2,322	743

INPUT/OUTPUT FUNCTIONS	TIMING IN MICROSECONDS IBM 1410	IBM 7010
1. Service an interrupt due to the completion of an overlapped operation; no error conditions; another IORW is added to a file list (NOTE 3 and NOTE 4)	2,075	648
2. Start a pending operation and return to an interrupted instruction (NOTE 3), where		
u — not overlapped	851 u	277 u
o — overlapped	549 o	173 o
3. To start SEEK operation, nonsequential	1,470+50M	560+16M
4. Additional time to start SEEK operation, full-track sequential	890	300
5. To start input/output operation after detecting SEEK complete interrupt	1,450+50M +50n	555+16M +16n
6. Additional time to start input/output operation if another module, having a higher priority, has a SEEK pending	820+50p	350+16p

In the module table:
M = Total number of modules on same channel.
n = Placement of object module in module table as determined by the DSKDF macro-instruction (for module 00, n = 1; for module 01, n = 2; etc.)
p = Placement of module with SEEK pending in module table as determined by the DSKDF macro-instruction (for module 00, p = 1; for module 01, p = 2; etc.)

SHARED DISK FILE CONSIDERATIONS	TIMING IN MICROSECONDS IBM 1410	IBM 7010
1. *Additional* time for any tape I/O operation if shared-file IOCS is generated.	270	104
2. *Additional* time for any disk I/O operation if shared-file IOCS is generated.	955	484

NOTE 1: The times listed for the scheduling functions are generally overlapped with respect to all channels.

NOTE 2: If a GET or PUT must move a data record, add the time required for the move to the times listed.

NOTE 3: These times are not overlapped with respect to the channel being serviced except for SEEK operations in process.

NOTE 4: *Additional* time required to service an interrupt if SPOOL was specified at System Generation time is 146 microseconds for IBM 1410 and 48 microseconds for IBM 7010.

Index

ADD card (Class IV) 47
ALTLB card (Class IV) 47
Assignment symbols for initial run
  Disk system 50
  Tape system 49
Autocoder compiler modules 54
Autocoder creation chart 60

Basic concepts
  Disk-oriented system 16-22
  Tape-oriented system 10-15
Basic Resident Monitor
  Disk system Master file 51
  Tape system Master file 50
Building a library
  Disk 26
  External to a tape SOF 24
  Part of a tape SOF 24

Check list for System Generation
  Disk-oriented 21
  Tape-oriented 14
Class I control card—The INCLD Card 45
Class II control cards—Macro Library 45
Class III control cards—Create Library 46
Class IV control cards—Relocatable Library 47
COBOL
  Compiler modules 55
  Creation chart 60
  Object-time modules 53
  Relocatable Library modules
    for object programs 59
Comments card for SG3 program 84
Complete system creation chart 64
Concepts of System Generation, general 6
Contents of the libraries 52
Control card classes 48
  Class I 45
  Class II 45
  Class III 46
  Class IV 47
Control cards
  Linkage Loader for System Generation 44
  Monitor for SG1 and SG2 44
  Pseudo Monitor 77, 76
  SG 45
  SG3 creation chart 63
  SG3 program 63, 81
  SG5 program 76-80
  System description 36
  System Generation 45
Copy card 82
Core-storage requirements
  Nonresident 88
  Operating system 87
  Optional Resident Monitor (for TP) 88
CREAT card (Class III) 47
Create Library 47
  Contents 55
  Control cards 46
  Maintenance 72
Creation charts
  Use of 57

Data files on disk storage, organization of 23
Data flow during System Generation runs 32
Definitions 6
DELET card
  Class II 46
  Class III 46
  Class IV 48
DEVDF macro 41
Device definitions for Resident IOCS (DEVDF) 41
Diagnostic messages
  for Disk Library Load program 71
  for Disk Load program 69
  for SG1 and SG2
    Disk-oriented system 72
    Tape-oriented system 71
  for SG3 86
  for SG4 75
  for SG5 78-80
Disk areas (GEN03-GEN06) 38
Disk definitions for Resident IOCS (DSKDF) 42
Disk library loader (DSKLIBLDR)
  Console messages 70
  Creation chart 64
Disk Load Program 68
  Console messages 69
Disk-oriented system 16-22
  Basic concepts 16
  Definition of 16
  Machine requirements 5, 8
  Maintenance considerations 21
  Over-all data flow 34
  SG1 and SG2 diagnostic messages 71
Disk Relocatable Library considerations 25, 73
Disk Sort Definition Program
  Creation chart 63
  Program modules 53, 63
Disk Sorting Program
  Machine requirements 9
  Relocatable Library modules 63
Disk storage, formatting 23
DSKDF macro 42
EDIT Control cards 77-78
EDIT Option 76
EXEQ card 30
File Organization System
  Creation chart for System Definition 63
  Monitor definitions for, (GEN08 statement) 39
  Optional Resident Monitor requirements for 88
  Relocatable library modules 52
  System Definition program 49, 50, 64
Form G files 23
FORTRAN
  Compiler modules 55
  Creation chart 62
  Object-time modules 53
  Relocatable Library modules for object programs 62
GEN01 macro 37
GEN02 macro 37
GEN03-GEN06 macros 38
GEN07 macro 38
GEN08 macro 39
GEN09 macro 40
GEN10 macro 41
GEN11 macro 41

GENER card (Class III) 46
GENRM macro 43
History file
  Maintaining with the SG3 program 84
  UPDAT optional procedure 82
HR identifier 23
IBM 1311 disk drives
  Basic Resident Monitor requirements for 88
  Nonresident requirements 89
IBM 1311 Disk Label Program, creation chart 64
INCLD card, Class I 45
INSER, card
  Class II 45
  Class III 46
  Class IV 47
Insert/Delete card 84
IOCS definitions (IOKDF) 42
IOCS timing estimates 89
IOKDF macro 42
Libraries, contents of 52
Library
  Building as part of tape SOF 24
  Building external to a tape SOF 24
  Building for disk 26
  Definition 6
  Disk 26
  Maintaining for disk 26, 72
  Maintaining for tape 25, 72
  Maintaining on tape SOF 24, 72
  Maintenance, functions and control cards 47, 73
Linkage Loader
  Auxiliary creation chart for TP 59
  Control cards for System Generation 44
  Creation chart 57
  Modules 54
Literature, prerequisite and related 5
Loader modules for PTC programs 55
LOCAT card 45
  Class II 45
  Class III 46
  Class IV 47
Machine requirements 5, 7-8
  Disk-oriented systems 5, 7
  Disk sorting program, generalized 9
  Operating system, tape-oriented 8
  Operating system, 1301 disk-oriented 8
  Operating system, 2302 disk-oriented 9
  SG4 74-75
  SG5 76
  SPOOL feature 9
  System Generation 5
  Tape-oriented systems 8
  Tape sorting program, generalized 9
  Tele-processing system 9
Macro Library
  Contents 52
  Control cards 45
  Maintenance of 73
Macro Print and Punch modules 55
Macro Print and Punch program 30
  Creation chart 64
Maintaining a disk library 26
Maintaining a tape library 25
Maintaining the History file with the SG3 program 81
Maintaining the System 73-80
Maintenance considerations
  Disk system 21
  Tape system 14
Master file
  Definition 6
  Disk-oriented system 7, 50
  Tape layout 32
  Tape-oriented system 7, 49
Master tape load program creation chart 64
Modification Tape 73-74
Monitor
  Control cards for SG1 and SG2 45
  Control cards for SG5 76-79
  Creation chart (for Tele-processing system) 59
  Definition 6
  Definitions (GEN08) 39
  Modules in Relocatable Library 58
Monitors with Tele-processing capabilities 29
Nonresident core-storage requirements 88
OMIT option 76
OMIT option control cards 78
Operating section 6
Operating System, 1410/7010
  Core-storage requirements 87
  Machine requirements 5, 8
Over-all data flow, tape system 32
Over-all data flow, disk system 34
Prerequisite and related literature 5
PRINT card 31
Programs available
  Disk system Master file 50
  Tape system Master file 49
Pseudo Monitor control cards 77
Purpose of System Generation 5
Purpose of this publication 5
Random-processing disk module definitions 43
Random-Processing Scheduler 29
  Modules 53
Record address (disk) 23
Relocatable libraries 24
Relocatable Library
  Contents 52
  Control cards 47
  Maintenance of 73
REPLC card 45
  Class II 45
  Class III 46
  Class IV 48
Reserve units (GEN09) 40
Resident Monitor 51, 53
  Core-storage requirements for TP (Optional) 88
  Modules 54
Restart program creation chart 58
Revision letter (History file) 82
Sequence number (History file) 82
Sequence number (SG4 and SG5) 74, 77
SG control card classes, group of 48
SG control cards 45
SG1 and SG2
  Diagnostic messages
    Disk-oriented system 72
    Tape-oriented system 71
  Program creation charts 63, 64
SG3 diagnostic messages 86
SG3 program
  Comments for 84
  Creation chart 64
  Maintaining History file with 85
SG4 Program
  Creation chart 64
  Maintaining Libraries with 74-75, 73
SG5 Program
  Creation chart 64
  Maintaining Libraries with 76-80, 73

SGF
Building for a disk-oriented system ... 16
Building for a tape-oriented system ... 10
Generation, example of ... 65
Modification, example of ... 66
Tape layout ... 32
Shared Disk Files ... 20
General information ... 20
Specification in DSKDF macro ... 41
SOF
Building for a disk-oriented system ... 19
Building for a tape-oriented system ... 12
Generation, example of ... 65
Tape layout ... 31
Sort Definition program, disk ... 27, 63
Sort Definition program, tape ... 27, 52, 63
SPLDF macro ... 36
SPOOL feature ... 36
Definition of ... 9
Machine requirements ... 9
Optional Resident Monitor requirements for ... 88
Specification of ... 36
System Definition, File Organization System ... 49, 50, 64
Creation chart ... 64
System description control cards ... 28, 36
System Generation
Check list for disk-oriented ... 21
Check list for tape-oriented ... 14
Concepts, general ... 5
Considerations ... 23
Control cards ... 44-48
Data flow during ... 32
Linkage Loader control cards ... 44
Machine requirements ... 5
Purpose of ... 5
Tape system, examples for a ... 63
System Generator File (SGF) ... 6
System Generator modules ... 55
System Maintenance ... 73-80
System Monitor creation chart ... 58
System Operating File (SOF) ... 12, 19
Tape layout, Master file, SGF and SOF ... 32
Tape-oriented system ... 7, 10-15
Basic concepts of ... 10-15
Definition of ... 6
Machine requirements ... 5, 8
Maintenance considerations ... 14
SG1 and SG2 diagnostic messages ... 71
Tape Sort Definition program ... 26
Creation chart ... 63
Program modules ... 52
Tape sorting program
Machine requirements ... 9
Relocatable Library modules ... 63
Tape system, over-all data flow ... 32
Tape-to-disk SOF load modules ... 55
Tape units (GEN02) ... 37
Tele-processing system
Library Generator modules ... 55
Machine requirements ... 9
Monitor creation chart ... 61
Monitors for ... 29
Supervisor modules ... 54
Units (GEN11) ... 41
Timing estimates for IOCS ... 89
TLIB card ... 78
Track number ... 23
Transitional Monitor modules ... 54
Unit-record devices (GEN01) ... 37
UPDAT card ... 83
UPDAT optional procedure for History file ... 83
Updating libraries ... 73
User-written program, addition of ... 13
Utility program
Creation chart ... 63
Modules ... 52, 55
Work units (GEN10) ... 41

IBM Technical Newsletter

File Number	1410/7010-36
Re: Form No.	C28-0352-5
This Newsletter No.	N27-1270
Date	December 30, 1966
Previous Newsletter Nos.	None

IBM 1410/7010 SYSTEM GENERATION

This Technical Newsletter amends the publication IBM 1410/7010 Operating System; System Generation, Form C28-0352-5, to include new information concerning SOF, and to make other necessary changes and additions.

The attached replacement pages (15-16, 21-22, 61-62, 71-72) should be substituted for the corresponding pages now in the publication. Text changes are indicated by a vertical line to the left of the affected text.

Please file this cover letter at the back of the publication. It provides a method of determining if all changes have been received and incorporated into the publication.

IBM Corporation, Programming Publications, Dept. 637, Neighborhood Road, Kingston, N.Y. 12401

PRINTED IN U.S.A.

with FORTRAN subprograms, the relocatable modules required to run with COBOL and FORTRAN object programs must be in the *same* Relocatable Library.

9. Every system must have the Bootstrap, the Resident Monitor, and the Transitional Monitor (in that order) at the beginning of the tape.

10. The maximum number of items that may appear on an SOF is 154. An item is defined as a program or a library. (Examples: COBOL is one item and IBMLIBR is one item.)

11. Table 1 indicates the ASGN cards that are required during System Generation.

12. The Generalized Tape Sorting Program requires a minimum of four tape units (including the SOF). These may be the same tape units as those used as work files by compilers. Additional tape units increase the program's efficiency. See the publication *Generalized Tape Sorting Program.*

13. The Generalized Disk Sorting Program requires two disk work areas, preferably on separate modules. Any tape units used must be in addition to the basic requirements for the system. See the publication *Generalized Sorting Program Using IBM 1301/2302 Disk Storage.*

14. Programs that require the Autocoder "No-Clear" option for DA statements must *not* be placed on the SOF.

15. Programs on the SOF cannot contain a phase intended to modify, through loading from the SOF, a previous phase.

Table 1. Tape System Input/Output Requirements

	Physical Unit	1	2	3	4	5 *	6	7 *	8	9
	Symbolic Unit	SOF	SIU	MW1	MW2	MW3	MJB	MGO	MR0	SPR
Program used in System Generation	Autocoder	Required	Required	Work File	Work File	Work File		Output		Optional
	SG1			Library Directory Work File	Linkage Loader Input File		Output	From Autocoder		
	SORT-DEFINE				Linkage Loader Input File			Not Used		
	LINKLOAD			Library Directory Work File	Linkage Loader Input File		Output	From Autocoder		
	SG2			Library Directory Work File	New SOF (Final Output File)		Input		Directory Work File	

* For the minimum configuration, MW3 and MJB, and MGO and MR0 share the same physical units.

Basic Concepts — Disk-Oriented System

This section applies only to a disk-oriented system and need not be read by persons interested only in a tape-oriented system.

How the System is Built

Functions to be Performed

The Master file contains a bootstrap disk load program that loads the Master file on the disk in preparation for System Generation. The absolute portion that is loaded on the disk is capable of building an SGF. The SGF incorporates those options desired by the user. To build the SGF, several programs from the operating section, which are in absolute format, are executed. These programs perform the following functions:

1. Accept input data that describes the environment within which the new system is to operate, and incorporate the optional items defined by each user.
2. Build absolute programs that the user specifies.
3. Place these absolute programs on the output file.
4. Place the library elements on the output file.

Programs Required

To perform the above functions, the following four programs are executed:

AUTOCODER: The user describes the machine configuration and the various options available in the form of Autocoder source statements. Autocoder processes this input by means of macro routines and generates the nucleus of the new system.

SG1: This program performs one function. It prepares a tape which contains input *control* information for the Linkage Loader (LINKLOAD program).

LINKLOAD: This program performs its standard function of converting relocatable routines into absolute format. It reads control information from the work tape produced by SG1 and/or control cards from the SIU. The *relocatable input* that it processes comes from:

1. The output of the Autocoder run (item 1 above); and
2. The Relocatable Library supplied on the Master file. (This library must have been loaded onto the disk.)

The output, in absolute form, is placed onto the Job file, MJB.

SG2: This program locates and copies the library elements that the user desires in the new system. Its output is a new tape that is capable of being loaded onto the disk. This tape contains all items generated.

Defining the System

The user must describe the Operating System that he desires through control cards. A detailed description of the control cards appears in "System Description Control Cards" and "System Generation Control Cards."

Briefly, the user supplies the following:

1. The number and types of input/output devices. A two-character assignment symbol is specified by the user to be used in all references to each device.
2. The variable and optional features desired within the Resident Monitor.
3. The number and types of symbolic unit entries required.
4. The variable and optional features desired within the Resident IOCS.

Preparing to Build an SGF

Before building an SGF or SOF, it is necessary for the user to load the Master file or the source SGF onto disk storage. Instructions for performing this transfer to disk storage are given in "Disk Load Program."

After the Master file is loaded onto the disk, it is necessary to format the disk areas required for the files (MJB, MGO, MW1, MW2, and MW3) used during System Generation. This is accomplished by using the 1301 or 2302 Format/Address Generator utility programs. See the publication *IBM 1410/7010 Operating System; Utility Programs,* Form C28-0353, for instructions in the use of these programs.

Building an SGF

This operation is the first step in System Generation. This section describes the steps leading to this initial SGF run.

General Maintenance Considerations

Maintenance of the Operating System covers many possible variations. Listed below are some of the important aspects:

Change to Monitor: Requires complete regeneration of the SGF, SOF, all Job files that have been saved, and all TP Library files.

Change to a Dependent Program in the Operating Section: Requires recompilation of affected modules, copying (INCLD) any unaffected programs, and regeneration of affected programs.

Change to Library (other than Monitor library elements): Requires updating of library, plus regeneration of any programs in the operating section which were affected. As in above item, any unaffected programs can be copied by use of the INCLD card. By careful planning, the user should be able to make changes to an existing relocatable library and also incorporate those changes into a new operating section as part of one job. For this type of operation, the reader should review the control card descriptions of the operation of the Go file during maintenance of the Relocatable Library. Refer to Class IV control cards INSER and REPLC, under "System Generation Control Cards."

Instead of the above method, the SG4 and SG5 programs can be used to update the libraries, as described in the section "System Maintenance." Each time the library modules are to be updated, IBM supplies a tape containing the changes to be made. This tape is used with the SG5 program to prepare an input tape for updating the libraries. The program has an option that permits it to be used with a minimum disk system having only one tape unit available to the Operating System program. If the user must make his own changes to IBM program modules, he can use the SG4 program for making the changes to the modules and for maintaining the modules.

A careful study of the control card descriptions is required to utilize the maintenance capabilities efficiently.

Check List for System Generation (Disk-Oriented)

1. The programs in System Generation use the last (highest) core-storage position as a starting point from which certain elements are built.

2. The Sort Definition program should be generated by the initial generation if sort or merge programs are to be created on an SOF.

3. The user can modify the Macro Library and the Create Library, but cannot create additional libraries with records of the same format as these libraries. A Relocatable Library can also be modified. The library must be loaded onto the LIB file when the system is loaded on the disk.

4. COBOL and Autocoder use symbolic units MW1, MW2, and MW3 for work files during compilation; FORTRAN uses MW1 and MW2. MW1 and MW3 should be assigned to a different channel and/or module from MW2 for balanced and efficient usage of the 1301 disk.

5. The Create Library must be named CREATLIB, and the Macro Library must be named MACROLIB.

6. If the COBOL "ENTER" verb is used in conjunction with FORTRAN subprograms, the relocatable subprograms required to run with COBOL and FORTRAN object programs (refer to "Relocatable Library Contents") must be in the *same* relocatable library.

7. The order of elements on the disk is of little importance because of the random access nature of the device. *However, the placement of some of the elements on the output tape, which contains the system, can be critical, and the following points should be observed:*

   a. The first program on the tape must be IBSGDL. This is the Disk Load program.
   b. The second program must be IBBOOT. IBBOOT, for a disk-oriented system, comprises a bootstrap program (IBBOOT2D), the Resident Monitor, and the Transitional Monitor.
   c. The remaining programs may be in any order if they have been included from an existing SGF. If the system that is being built is to be capable of generating another system, IBSGDL must be included again.
   d. If an entire system is being generated, IBSGDL must be generated as the first program. Also, if the entire system being generated is to be capable of generating another system, then the IBSGDL program must also be generated last.

8. Table 2 indicates the ASGN cards that are required during System Generation.

9. The Generalized Tape Sorting program requires a minimum of four tape units (including the SOF). Additional tape units increase the program's efficiency. See the publication *Generalized Tape Sorting Program.*

10. Each initialization of a disk system requires that the BOOT1 card be first in the SIU. The contents of this card are typed on the console printer during system loading. The operator key punches the card and places it in the SIU.

11. The Generalized Disk Sorting Program requires two disk work areas, preferably on separate modules. Any tape units used must be in addition to the basic

requirements for the system. See the publication *Generalized Sorting Program Using IBM 1301/2302 Disk Storage.*

12. Programs that require the Autocoder "No-Clear" option for DA statements should *not* be placed on the SOF.

13. Programs on the SOF cannot contain a phase intended to modify, through loading from the SOF, a previous phase.

Table 2. Disk System Input/Output Requirements

Physical Unit		1	2	3	4	5	6	7	8	9
Symbolic Unit		SOF	SIU	MW1	MW2	MW3	MJB	MGO	LIB	SPR
Program used in System Generation	Autocoder	Required	Required	Work File	Work File	Work File		Output		Optional
	SG1				*Linkage Loader Input File			Not Used		
	SORT-DEFINE				*Linkage Loader Input File			Not Used		
	LINKLOAD			*	*Linkage Loader Input File		Output	From Autocoder	Input	
	SG2				*New SOF		Input	Possible Input	Input	

* Must be a tape unit.

AUTOCODER						
Work Files and Go Files on	Tape		X	X		
	Disk				X	X
Processor Resides on	Tape		X		X	
	Disk			X		X
Create Packet Name			TAUTOCODE			DAUTOCODE
6	16	21				
001	PHASE	AUTOCODER	X	X	X	X
	CALL	IBAU10COMM	X	X	X	X
	CALLN	IBAU10INPT	X	X	X	X
	CALL	IBAU10TPE1	X	X		
	CALL	IBAU10TPE2	X			
	CALL	IBAU10DSK1			X	X
	CALL	IBAU10DSK2		X		X
	CALL	IBAU10DSK3			X	
	CALL	IBAU10IOTB	X	X	X	X
		61				
* 010	PHASE	3	X	X	X	X
		62				
** 015	PHASE	M	X		X	
020	PHASE		X	X	X	X
	CALLN	IBAU20GENR	X	X	X	X
	CALL	IBAU20TPE1	X	X		
	CALL	IBAU20TPE2	X			
	CALL	IBAU20DSK1			X	X
	CALL	IBAU20DSK2		X		X
	CALL	IBAU20DSK3			X	
030	PHASE		X	X	X	X
	CALLN	IBAU30ASGN	X	X	X	X
	CALL	IBAU30SCAN	X	X	X	X
	CALL	IBAU30TPE1	X	X		
	CALL	IBAU30DSK1			X	X
	CALLN	IBAU30SUBR	X	X	X	X
033	PHASE		X	X	X	X
	CALLN	IBAU33SUBR	X	X	X	X
	CALL	IBAU33TPE1	X	X		
	CALL	IBAU33DSK1			X	X
	CALLN	IBAU33RCUR	X	X	X	X
040	PHASE		X	X	X	X
	CALLN	IBAU40OTPT	X	X	X	X
	CALL	IBTOCGM	X	X		
	CALL	IBDOCGM			X	X
	CALL	IBTPCGM	X	X		
	CALL	IBDPCGM			X	X
	CALL	IBTCCGM	X	X		
	CALL	IBDCCGM			X	X
	CALL	IBTNCGM	X	X		
	CALL	IBDNCGM			X	X
	CALLN	IBAU40TPE1	X	X		
	CALLN	IBAU40DSK1			X	X
050	PHASE		X	X	X	X
	CALL	IBAU50TPE1	X	X		
	CALL	IBAU50DSK1			X	X
	CALLN	IBAU50CREF	X	X	X	X

* To insert Directory 3
** To insert the Macro Library

| NOTE: The Macro Library cannot be placed on a Job file.

COBOL: Relocatable Library Modules for Object Programs

The following modules are required by COBOL object programs:

IBCOBOL
IBCBLADOVR
IBCBLDSPLY
IBCBLCMPAR
IBCBLFLDMP
IBCBLALTST
IBCBLSUBSC
IBCBLACCPT
IBCBLEXPON
IBCBLRDINT
IBCBLDVZER
IBCBLCLEAR

FORTRAN: Relocatable Library Modules for Object Programs

Required Modules

The following modules are required to run with any FORTRAN object program:

IBCOMMON	IBINDX2	IBBACKSP	EXP
IBLABEL	IBINDX3	IBENDFILE	ALOG
IBFOERR	IBEXPFF	IBREWIND	
IBINTRP	IBEXPFI	FLOAT	
IBINDX1	IBEXPII	IFIX	

Optional Modules

The following modules are not required by a FORTRAN program unless they are called by name in the source program. Inclusion of these modules is therefore an installation option, except (as noted) the selection of one optional module may require another.

ABS	DIM
AINT	DVCHK
AMAX0	EXIT
AMAX1	IABS
AMIN0	IDIM
AMIN1	INT
AMOD (requires AINT)	ISIGN
ATAN	MAX0
COS (requires SIN)	MAX1
MIN0	SIN
MIN1	SLITE (requires SLITET)
MOD	SLITET
OVERFL	SQRT
SIGN	

Floating-Point Arithmetic Modules

The four modules supporting floating-point arithmetic are on the Relocatable Library of the Master file in the following order:

POSITION	NAME	REMARKS
1	IBINTRP	For *programmed interpretation* of floating-point instructions.
2	OVERFL	For *machine interpretation* of floating-point instructions (on an IBM 7010 with the Floating-Point Arithmetic feature).
3	DVCHK	
4	IBINTRP	

To obtain the modules supporting the 7010 Floating-Point Arithmetic feature, the following card should be used:

```
6          16      21
IBINTRP    DELET   R
```

To obtain the modules that provide programmed interpretation for floating-point instructions, use this card:

```
6          16      21
OVERFL     DELET   R,IBINTRP
```

FORTRAN						
Work Files on	Tape		X	X		
	Disk				X	X
Go File on	Tape		X		X	
	Disk			X		X
Create Packet Name			TFORTRAN			DFORTRAN
	16	21				
	PHASE	FORTRAN	X	X	X	X
	CALLN	IBFTNCMN	X	X	X	X
	CALL	IBFTN05TO	X	X		
	CALL	IBFTN05DO			X	X
	CALLN	IBFTN05	X	X	X	X
	PHASE		X	X	X	X
	BASE1	FCMN/	X	X	X	X
	CALL	IBTPCGM	X		X	
	CALL	IBDPCGM		X		X
	CALL	IBTCCGM	X		X	
	CALL	IBDCCGM		X		X
	CALL	IBTNCGM	X		X	
	CALL	IBDNCGM		X		X
	CALLN	IBTOCGM	X		X	
	CALLN	IBDOCGM		X		X
	CALL	IBFTN10TO	X	X		
	CALL	IBFTN10DO			X	X
	CALL	IBFTN10TI	X	X		
	CALL	IBFTN10DI			X	X
	CALLN	IBFTN10	X	X	X	X
	PHASE		X	X	X	X
	BASE1	MOCG/	X	X	X	X
	CALL	IBFTN20TO	X	X		
	CALL	IBFTN20DO			X	X
	CALL	IBFTN20TI	X	X		
	CALL	IBFTN20DI			X	X
	CALLN	IBFTN20	X	X	X	X
	PHASE		X	X	X	X
	BASE1	MOCG/	X	X	X	X
	CALL	IBFTN25TI	X	X		
	CALL	IBFTN25DI			X	X
	CALLN	IBFTN25	X	X	X	X

The SG1 and SG2 diagnostic messages are listed in this section with an explanation of the message and suggested corrective action for: (1) tape-oriented systems, and (2) disk-oriented systems.

Tape-Oriented System

Diagnostic messages that may be produced on the console printer during execution of SG1 and SG2 are listed in sequence by message number in the following section. When one of these messages appears, processing halts and special end of program occurs unless the "Corrective Action" comment states that processing will continue or that no corrective action is to be taken. After the correction is made, the job must be rerun. Full instructions appear in the publication, *Operator's Guide.*

SG1 and SG2 Diagnostic Messages for a Tape-Oriented System

11501 XXXXXXXXXX NOT ON TAPE
Explanation: Request has been made for the named item but it cannot be located on the SOF or on the Relocatable or Create Library.
Corrective Action: Check control deck for proper call and/or spelling, etc.

11502 SEQERR-XXXXX
Explanation: A macro statement sequence number with low-order blank or an out-of-order sequence number has been encountered in the SIU.
Corrective Action: Generation continues but the statement in question is omitted from the library and is printed on the SPR. Check the control deck.

11503 DIRECTORY X NOT AVAILABLE
Explanation: X can be "1" or "3."
Corrective Action: Check the control deck to make sure directory has been generated previous to this reference. If X is not 1 or 3, the PHASE card for the directory has been mispunched.

11504 XXXXXXXXXX LIBRARY NOT AVAILABLE
Explanation: Request has been made for the named library but that library cannot be located or does not exist.
Corrective Action: Check the control deck to make sure that a library of the name XXXXXXXXXX has been copied, updated, or added by SG1.

11505 NEW SOF ON XXX
Explanation: XXX is the x-control field for the unit on which the System Generation *output* file is located.
Corrective Action: None.

11507 LIB TYP UNKNOWN
Explanation: Request has been made for a library whose type is not M, R, or C.
Corrective Action: Check control deck. The PHASE card for the library header may have been punched incorrectly. The M, R, or C must be in column 62 of the PHASE card.

11508 BACKSPACE FAILURE – SOF
Corrective Action: Restart.

11509 BACKSPACE FAILURE – MJB
Corrective Action: Restart.

11510 NEW LIBRARY ON XXX
Explanation: XXX is the x-control field for the unit on which the new library is located.
Corrective Action: None.

11511 UNKNOWN HDR TYP
Explanation: Header record is not proper format.
Corrective Action: Check control deck. Check that all the libraries processed by SG1 were done in one block and were processed before absolute programs. Also check that no conflict exists in input/output assignments.

11512 NO TYPC COUNTS
Explanation: Specific cause has not been determined.
Corrective Action: Check control deck for extraneous PHASE cards, order of cards, etc.

11513 EXTRANEOUS HEADER
Explanation: Record descriptions contained on MW1 (header records) do not agree with contents of Job file.
Corrective Action: Ensure that *all* requests for SG1 to INSER, DELET, REPLC, and ADD library material were made prior to requests to process absolute format records. Also check that no conflict exists in input/output assignments.

11514 CHECK CONTROL DECK
Explanation: A System Generation control card is placed where none is expected, or a control card is not where it should be (example: LOCAT*M* followed by DELET*R*).
Corrective Action: Correct control card deck.

11515 MODULE XXXXXXXXXX NOT ON GO TAPE
Explanation: Occurs during library maintenance. The named subprogram was not immediately available on the SIU and was not found on the Go file.
Corrective Action: Check control deck. Subprogram name may be mispunched.

11516 SOF RECORD TOO LARGE TO COPY
Explanation: SG1, when working with largest possible records, cannot copy an SOF on a smaller machine than was used to generate the SOF.
Corrective Action: The records on the SOF cannot be copied on the size machine being used, with SG1 based where it is. Regeneration of the SOF is necessary.

11517 NO ALTERNATE LIBRARY HEADER
Explanation: SG1 has been directed to find an external library, but did not find an identifying header record on LIB.
Corrective Action: Tape is probably wrong reel. Mount proper reel and begin again.

11518 (No message)
Explanation: A macro routine or a model statement has been specified, but does not appear on the system file. The questionable reference is printed on the SPR.
Corrective Action: Check control deck. The input to SG1 may be out of sequence.

11519 MACRO DIR EXCEEDS 240
Explanation: The Macro Library can have only 240 entries, and this number has been exceeded.
Corrective Action: Reduce number of macro routines to specified limit.

11520 NO SYSGEN END CARD
Corrective Action: Check control deck. System Generation will process the last card read as if it were followed by an END card. No action is required if all other cards are in order.

11521 HDR CD INVALID
Explanation: Column 60 of the EXEQ card indicates a header is desired on the output tape. The card following on the SIU is not a valid header card.
Corrective Action: Correct deck.

11522 CC60 OF EXEQ INVALID
Explanation: Column 60 of the EXEQ card has a digit other than "1" or "2."
Corrective Action: Correct the EXEQ card for the type of header desired.

11523 SOF EXCEEDS 154 LIMIT
Explanation: Tape SOF may have no more than 154 items, and this number has been exceeded.
Corrective Action: Deck may be in error. Some items may have been copied several times.

Disk-Oriented System

Diagnostic messages that may be produced on the console printer during execution of SG1 and SG2 are listed in sequence by message number in the following section. When one of these messages appears, processing halts and special end of program occurs unless the "Corrective Action" comment states that processing will continue or that no corrective action is to be taken. After the correction is made, the job must be rerun. Full instructions appear in the *Operator's Guide.*

SG1 and SG2 Diagnostic Messages for a Disk-Oriented System

11521 HDR CD INVALID
Explanation: Column 60 of the EXEQ card indicates a header is desired on the output tape. The card following on the SIU is not a valid header card.
Corrective Action: Correct deck.

11522 CC60 OF EXEQ INVALID
Explanation: Column 60 of the EXEQ card has a digit other than "1" or "2".
Corrective Action: Correct the EXEQ card for the type of header desired.

11562 CREATLIB NOT ON SOF
Explanation: SG1 has been executed, but the Create Library is not on the system.
Corrective Action: An SOF that includes the Create Library must be generated and this SOF used to process the job that caused the message.

11563 PACKAGE XXXXXXXXXX NOT IN CREATLIB
Explanation: No packet of the name XXXXXXXXXX has been found in the Create Library by SG1.
Corrective Action: Check the control deck to be sure that spelling on CREAT card is correct.

11564 OUTPUT ON XXX
Explanation: XXX is the x-control field for the unit on which the new output file is located.
Corrective Action: None.

11565 DISK LOADER NOT PRESENT
Explanation: IBSGDL has not been included or generated as the first item.
Corrective Action: Rerun the job including IBSGDL.

11566 NO SYSGEN END CARD
Corrective Action: Check control deck. System Generation will process the last card read as if it were followed by an END card. No corrective action is necessary if all other cards are in order.

11567 CHECK CONTROL DECK
Explanation: A System Generation control card is placed where none is expected, or a control card is not where it should be (example: LOCATM followed by DELETR).
Corrective Action: Correct control card deck.

11568 (No message)
Explanation: A macro routine or a model statement has been specified but does not appear on the system file. The questionable reference is printed on the SPR.
Corrective Action: Check control deck. The input to SG2 may be out of sequence.

11569 SEQERR-XXXXX
Explanation: A macro statement sequence number with low-order blank or an out-of-order sequence number has been encountered in the SIU.
Corrective Action: Generation continues but the statement in question is omitted from the library and is printed on the SPR. Check the control deck.

11570 ALTERNATE LIBRARY HEADER
Explanation: SG2 has been directed to find a library but did not find an identifying header record on LIB.
Corrective Action: Tape is probably wrong reel. Mount proper reel and begin again.

11571 MODULE XXXXXXXXXX NOT ON GO FILE
Explanation: Occurs during library maintenance. The named subprogram was not immediately available on the SIU and was not found on the Go file.
Corrective Action: Check control deck. Subprogram name may be mispunched.

11572 XXXXXXXXXX NOT AVAIL
Explanation: An INCLD card has specified the name of an item which is not in the system.
Corrective Action: Check control deck for proper spelling of item name.

11573 XXXXXXXXXX NOT VALID
Explanation: An INCLD card has specified the name of an item which does not contain valid program information. The area assigned to SOF (on the disk) has been accidentally altered or destroyed.
Corrective Action: Reload the SOF from the output tape from the previous System Generation run.

11574 SG2 CTL CARD OR I/O ERROR
Explanation: An uncorrectable I/O error has occurred. The problem may be caused by erroneous system generation control cards.
Corrective Action: Check the deck and rerun.

Printed in U.S.A. C28-0352-5 166/12P

IBM®

International Business Machines Corporation
Data Processing Division
112 East Post Road, White Plains, N.Y. 10601