Catalog No. 1809623-05
Issued: March 1985

ADO

AMPEX DIGITAL OPTICS

VOLUME 2

PARTS LISTS AND SCHEMATICS

NOTICE

This manual has been revised to conform to current documentation. Pages containing revised material have the same catalog number suffix. (-05) as the title pages. Pages left unchanged from previous editions of this manual have suffixes lower than (-04) the current catalog number.

AMPEX CORPORATION
AUDIO-VIDEO SYSTEMS DIVISION

Prepared by

AVSD Technical Publications
Ampex Corporation
401 Broadway
Redwood City, CA 94063

Copyright 1985 by Ampex Corporation
Catalog No. 1809623-05
Issued: March 1985

FD011185CW

FOR ADDITIONAL TECHNICAL INFORMATION

FIELD ENGINEERING BULLETIN SERVICE

The Ampex Audio-Video Systems Division's Technical Support Group publishes Field Engineering Bulletins (FEBs) describing approved equipment modifications, special tools and accessories plus information on improved operating and maintenance techniques.

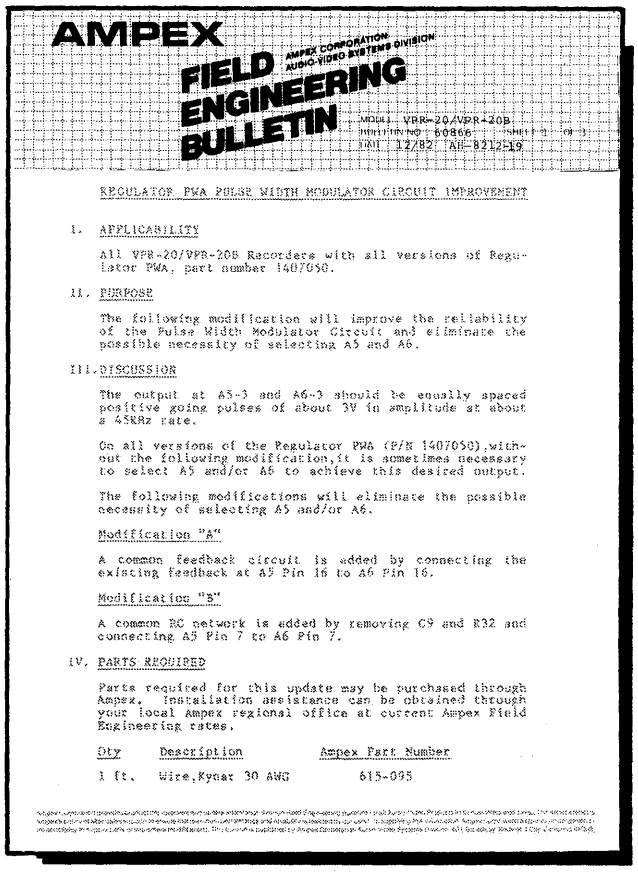

AMPEX

AMPEX CORPORATION AUDIO-VIDEO SYSTEMS DIVISION

FIELD ENGINEERING BULLETIN

MODEL: VPR-20/VPR-20B
BULLETIN NO: 60866 SHEET 1 OF 1
DATE: 12/82 AE-8212-19

REGULATOR PWA PULSE WIDTH MODULATOR CIRCUIT IMPROVEMENT

I. APPLICABILITY

All VPR-20/VPR-20B Recorders with all versions of Regulator PWA, part number 1407050.

II. PURPOSE

The following modification will improve the reliability of the Pulse Width Modulator Circuit and eliminate the possible necessity of selecting A5 and A6.

III. DISCUSSION

The output at A5-3 and A6-3 should be equally spaced positive going pulses of about 3V in amplitude at about a 45KHz rate.

On all versions of the Regulator PWA (P/N 1407050), without the following modification, it is sometimes necessary to select A5 and/or A6 to achieve this desired output.

The following modifications will eliminate the possible necessity of selecting A5 and/or A6.

Modification "A"

A common feedback circuit is added by connecting the existing feedback at A5 Pin 16 to A6 Pin 16.

Modification "B"

A common RC network is added by removing C9 and R32 and connecting A5 Pin 7 to A6 Pin 7.

IV. PARTS REQUIRED

Parts required for this update may be purchased through Ampex. Installation assistance can be obtained through your local Ampex regional office at current Ampex Field Engineering rates.

Qty	Description	Ampex Part Number
1 ft.	Wire, Kynar 30 AWG	615-095

To receive these bulletins, send us the following information:

Owner's Name
Owner's Address

Model No.
Serial No.
Date of Purchase

Dealer's Name
Dealer's Address

In the United States send to:

AMPEX CORPORATION
Audio-Video Systems Division
Technical Support Group
401 Broadway, Mail Stop 3-46
Redwood City, California 94063

Outside United States send to:

YOUR NEAREST SALES COMPANY

(Addresses on rear of this page)

TRAINING SERVICES

Technical (maintenance) training on this and other Ampex video, audio, disc and instrumentation products is offered on a scheduled basis at Corporate Headquarters in Redwood City, California, and at Headquarters European Area in Reading, England. For further information regarding this training, please contact your local Ampex Sales Office.

SALES/SERVICE OFFICES

UNITED STATES

CALIFORNIA
500 Rodier Drive
Glendale, CA 91201
(213) 240-5000

401 Broadway
Redwood City, CA 94063-3199
(415) 367-2202

GEORGIA
1872 Montreal Road
Tucker, GA 30084
(404) 491-7112

ILLINOIS
719 W. Algonquin Road
Arlington Heights, IL 60005
(312) 593-6000

MARYLAND
10215 Fernwood Road
Bethesda, MD 20817
(301) 530-8800

NEW JERSEY
5 Pearl Court
Allendale, NJ 07401
(201) 825-9600

OHIO
4130 Linden Avenue
Dayton, OH 45432
(513) 254-6101

TEXAS
3353 Earhart Drive
Carrollton, TX 75006
(214) 960-1162

UTAH
2880 South Main, Suite 111
Salt Lake City, UT 84115
(801) 487-8181

AMPEX CORPORATION
AUDIO-VIDEO SYSTEMS DIVISION
401 BROADWAY
REDWOOD CITY, CALIFORNIA 94063
(415) 367-2011

Effective: 1 October 1984

INTERNATIONAL

AUSTRALIA
Ampex Australia Pty. Ltd.
P.O. Box 199
55-61 Talavera Road, Unit A
North Ryde, 2113
New South Wales, Australia

21 Terra-Cotta Drive
Blackburn
Victoria, Australia

BAHRAIN
Ampex World Operations
Abu Fateh Building, #499
Road 1706, Diplomatic Area
P.O. Box 26627
State of Bahrain

BELGIUM
Ampex S.A. Nivelles
Rue de l'Industrie, 8
1400 Nivelles, Belgium

BRAZIL
Ampex do Brasil Electronica Ltda.
Rua Visconde de Piraja 595,
Grupo 1104
Ipanema - 22410
Rio de Janeiro, RJ Brazil

CANADA
Ampex Canada Inc.
1770 Argentia Road
Mississauga, Ontario
Canada, L5N 3S7

1116-55 Avenue, N.E.
Calgary, Alberta
T2E 6Y4, Canada

729 Meloche Avenue
Dorval, Quebec
H9P 2S4, Canada

COLOMBIA
Ampex South America
Apartado Aereo 29613
Carrera 16A Nr. 79-25
Bogota, Colombia

CYPRUS
Ampex World Operations, S.A.
Apt. 802, Ghinis Building
58-60 Dighenis Akritas Ave.
Nicosia, Cyprus

ENGLAND
Ampex International
Acre Road, Reading
Berkshire, RG2 OQR, England

Ampex Great Britain Ltd.
Acre Road, Reading
Berkshire, RG2 OQR, England

FRANCE
Ampex SARL
Courcellor I,
2 Rue Curnonsky
75017 Paris, France

GERMANY
Ampex Europa GmbH
Walter-Kolb-Str. 9-11
6000 Frankfurt (Main) 70
West Germany

HONG KONG
Ampex World Operations, S.A.
Rooms 908-911, 9th Floor
TSIM SHA Centre (East Wing)
66 Mody Road
Tsim Sha Tsui East
Kowloon, Hong Kong

ITALY
Ampex Marketing Services SRL
Casella Postale 10720
00143 Rome
Rome, Italy

Ampex Italiana S.p.A.
4 Via Riccardo Gigante
00143 Rome, Italy

Ampex Italiana S.p.A.
Via Cristoforo Colombo, 48
20090 Trezzano Sul Naviglio
Milano, Italy

JAPAN
Ampex Japan Ltd.
P.O. Box 15
Tokyo Ryutsu Center
6-1-1 Heiwajima, Ota-ku
Tokyo 143, Japan

MEXICO
Ampex de Mexico, S.A. De C.V.
Apdo, Postal No. 13-615
Division del Norte No. 1832
Col. Postales
Delegacion Benito Juarez
Mexico 13, D.F. 03300

NETHERLANDS
Ampex B.V.
P.O. Box 9026
Colorado-Dreef 36
3506 GA Utrecht, The Netherlands

SINGAPORE
Ampex International Sales Corp.
151 Chin Swee Road #08-13
Manhattan House
Singapore 0316
Republic of Singapore

SPAIN
Ampex Trading Co. S.A.
Calle Princesa No. 47
5th Floor C & D
Madrid 8, Spain

SWEDEN
Ampex Scandinavia A.B.
P.O. Box 7056 (Rissneleden 8)
S-172 07 Sundbyberg, Sweden

SWITZERLAND
Ampex World Operations S.A.
Rue de Simplon 13
1700 Fribourg
Switzerland

VENEZUELA
OTACCA-AMPEX
Apartado 76825
Caracas 1070-A
Venezuela

INTRODUCTION

This manual contains parts lists and schematics for the ADO, Ampex Digital Optics, Ampex Assembly Number 1420200. This manual reflects the ADO 5.1 upgrade information.

Four indexes list the assemblies and schematics as follows:

- **Indentured List of Assemblies** — List of assemblies in sequence of appearance in the manual.
- **Numerical List of Assemblies** — List of assemblies in numeric sequence.
- **Numerical List of Schematics** — List of schematics in numeric sequence.
- **List of Schematics by PWA Number** — List of schematics in PWA number sequence.

RELATED DOCUMENTS

Catolog No.	Title
1809538-04	Product Description
1809551-03	Operators Guide
1809550-04	Service Manual

ORDERING INFORMATION

This manual is one of two manuals containing parts lists and schematics for the ADO, Ampex Digital Optics.

To order individual additional manuals, use the following catalog numbers:

1809622 ADO Parts Lists and Schematics, VOLUME 1

1809623 ADO Parts Lists and Schematics, VOLUME 2

If a complete set of manuals (Volumes 1 and 2) is to be ordered, use Catalog Number 1809621.

Note: This issue of the manual reflects the documentation as of 11 January 1985.

INDENTURED LIST OF ASSEMBLIES

VOLUME 1

1 2 3 4 5 6 TITLE	ASSEMBLY NO.	PAGE NO.
1 SYSTEM		
Ampex Digital Optics (ADO)	1420200	1-1
Basic Assembly	1420201	1-3
2 SIGNAL SYSTEM ASSEMBLY		
Signal System Assembly	1464366	2-1
Analog Chassis Assembly	1420154	2-5
Analog Motherboard PWA	1464582	2-8
Regulator Heatsink Assembly	1420161	2-13
Analog Voltage Regulator PWA	1420062	2-16
Digital Motherboard PWA	1409725	2-21
+5 Volt Power Supply Assembly	1465025	2-72
Digital Door Assembly	1420465	2-74
Analog Door Assembly	1420466	2-75
120V/230V Line Voltage Kit		
120V Line Voltage Kit	1420501	2-77
230V Line Voltage Kit	1420502	2-78
120V Power Supply Chassis Assembly	1464325	2-79
120V Transformer Assembly	1464326	2-85
230V Power Supply Chassis Assembly	1420218	2-88
230V Transformer Assembly	1464565	2-93
Connector Panel Assembly	1420150	2-96
Interconnect Analog Motherboard Cable	1420315	2-100
Interconnect Digital Motherboard Cable	1420314	2-101
Jumper Cable	1420316	2-102
Video Output Processor Cable	1420454	2-103
High Level Control Cable	1420455	2-104
120V Rear Fan Assembly	1420148	2-105
230V Rear Fan Assembly	1420214	2-108
120V AC Cable Assembly	1420244	2-110
230V AC Cable Assembly	1420209	2-111
120V Lower Fan Assembly	1420376	2-112
230V Lower Fan Assembly	1420215	2-114
120V Circuit Breaker Assembly	1465043	2-116
230V Circuit Breaker Assembly	1420217	2-118

INDENTURED LIST OF ASSEMBLIES
(Continued)

VOLUME 1

TITLE	ASSEMBLY NO.	PAGE NO.
1 2 3 4 5 6		
3 PRINTED WIRING ASSEMBLIES		
Analog PWAs		
A/D Converter Digi-Matte PWA, A1 (OPTION)	1464292	3-1
A/D Converter PWA, A1, NTSC	1420068	3-17
A/D Converter PWA, A1, PAL	1464202	3-27
Comb Filter PWA, A2, NTSC	1420124	3-39
Comb Filter PWA, A2, PAL	1465002	3-57
Input Reference PWA, A3, NTSC	1420075	3-71
Input Reference PWA, A3, PAL	1464226	3-85
D/A Converter PWA, A4	1420424	3-101
Video Output Processor PWA, A5, NTSC	1464549	3-111
Video Output Processor PWA, A5, PAL	1464232	3-121
Output Reference PWA, A6, NTSC	1420369	3-131
Output Reference PWA, A6, PAL	1464229	3-140
Digital PWAs		
Input Video Processor PWA, A1, NTSC	1464542	3-149
Input Video Processor PWA, A1, PAL	1464996	3-173
Key Interpolator PWA	1464989	3-178
Y Memory PWA, A2-A6, A16, A17,	1464262	3-189
Color Processor PWA, A7, A18, NTSC	1420023	3-207
Color Processor PWA, A7, A18, PAL	1464298	3-223
Chroma/Key Memory PWA, A8, A19, NTSC	1420038	3-228
Chroma/Key Memory PWA, A8, A19, PAL	1464259	3-241
Coefficient Store PWA, A9, A20	1420026	3-246
Interpolator PWA, A10, A24	1420017	3-255
Vertical Processor PWA, A11	1420029	3-269
VOLUME 2		
Key Processor PWA, A12, A23	1464636	3-283
Address Generator II PWA, A13, A24	1420035	3-301
Address Generator I PWA, A14, A25	1420079	3-319
Output Control PWA, A15, NTSC	1464633	3-333
Output Control PWA, A15, PAL	1464614	3-347
Horizontal Processor PWA, A22, NTSC	1420032	3-352
Horizontal Processor PWA, A22, PAL	1464301	3-363
Low Level Controller PWA, A26	1464283	3-366
High Level Controller PWA, A27	1464286	3-389
Digital Test Signal Generator PWA, NTSC	1420458	3-409
Digital Test Signal Generator PWA, PAL	1464371	3-415

INDENTURED LIST OF ASSEMBLIES
(Continued)

VOLUME 2

1 2 3 4 5 6	TITLE	ASSEMBLY NO.	PAGE NO.
4	**OPTIONS**		
	Control Unit Assembly		
	120V Control Unit Assembly	1465091	4-1
	230V Control Unit Assembly	1465094	4-2
	Keyboard Assembly	1420180	4-3
	Keyboard Switch PWA	1420181	4-7
	Internal Connect Cable	1420420	4-13
	Joystick Replacement Kit	1464800	4-14
	Joystick Assembly	1464559	4-15
	CPU Keyboard PWA	1420184	4-16
	120V Monitor Housing Assembly	1465092	4-23
	230V Monitor Housing Assembly	1465095	4-26
	Cover Assembly	1420450	4-28
	120V Chassis Assembly	1465093	4-29
	230V Chassis Assembly	1465096	4-33
	Control Processor PWA	1464512	4-37
	Input/Output PWA	1420471	4-57
	Control Interface PWA	1420258	4-75
	AC Chassis Cable Assembly	1420433	4-79
	RFI Filter	1420431	4-83
	DC Power Harness	1420434	4-85
	AC Fan Cord	1420435	4-87
	Ribbon Signal Interconnect Cable Assembly	1420437	4-88
	Control Processor Cable	1420439	4-89
	Input/Output Cable Assembly	1420440	4-90
	Video Out Cable Assembly	1420207	4-91
	Remote Cable Assembly	1420208	4-92
	CRT Monitor Modification Assembly	1420477	4-93
	CRT Cable Assembly	1420436	4-96
	Input Video and Digi-Matte Options		
	Input Video Processor Kit, NTSC	1464978	4-97
	Input Video Processor PWA, NTSC (See page 3-149)	1464542	
	Digi-Matte Kit, NTSC	1464980	4-98
	A/D Converter Digi-Matte PWA, A1,(OPTION) (See page 3-1)	1464292	
	Key Interpolator PWA (See page 3-178)	1464989	
	Input Video Processor Kit, PAL	1465054	4-99
	Input Video Processor PWA, A1, PAL (See page 3-173)	1464996	
	Digi-Matte Kit, PAL	1465056	4-100
	A/D Converter Digi-Matte PWA, A1 (OPTION) (See page 3-1)	1464292	
	Key Interpolator PWA (See page 3-178)	1464989	

INDENTURED LIST OF ASSEMBLIES
(Continued)

VOLUME 2

TITLE	ASSEMBLY NO.	PAGE NO.
1 2 3 4 5 6		
4 OPTIONS (Continued)		
Control Unit Assembly (Continued)		
Floppy Disk Option		
Floppy Disk Option	1420203	4-101
Disk Drive Cable Assembly	1420438	4-102
Floppy Disk Drive Modification	1420482	4-103
5 MISCELLANEOUS		
Miscellaneous Parts Kit	1420177	5-1
Digital Extender Board Assembly	1409773	5-2
Analog Extender Board Assembly	1409899	5-4
Control Unit Miscellaneous Parts Kit	1420479	5-6
System Interconnect Cable	1420419	5-8
Interconnect Keyboard Cable	1420422	5-9
Single Channel Kit (Accessory)	1464539	5-10
Control Panel Field (5.0) Upgrade Kit	1464982	5-11
ROM Adaptor PWA	1464507	5-13
Hardware Signal System (5.0) Upgrade Kit, NTSC	1464981	5-17
Hardware Signal System (5.0) Upgrade Kit, PAL	1465057	5-19
+5V Digital Power Supply Harness Kit	1464866	5-20
APPENDIX A		
Integrated Circuits		A-i
APPENDIX B		
Boschert Power Supply		B-i
APPENDIX C		
C. Itoh, Inc. CRT Display Monitor		C-i
APPENDIX D		
Power/Mate Corp. Power Supplies		D-i
APPENDIX E		
Powertec, Inc. Power Supply		E-i

NUMERICAL LIST OF ASSEMBLIES

ASSEMBLY NO.	REV	TITLE	VOLUME NO.	PAGE NO.
1409725	M	Digital Motherboard PWA	1	2-21
1409773	E	Digital Extender Board Assembly	2	5-2
1409899	C	Analog Extender Board Assembly	2	5-4
1420017	G	Interpolator PWA, A10, A24	1	3-255
1420023	S	Color Processor PWA, A7, NTSC	1	3-207
1420026	G	Coefficient Store PWA, A9, A20	1	3-246
1420029	P	Vertical Processor PWA, A11	1	3-269
1420032	S	Horizontal Processor PWA, A22, NTSC	2	3-352
1420035	AF	Address Generator II PWA, A13, A24	2	3-301
1420038	N	Chroma/Key Memory PWA, A8, A19, NTSC	1	3-228
1420062	G	Analog Voltage Regulator PWA	1	2-16
1420068	S	A/D Converter PWA, A1, NTSC	1	3-17
1420075	T	Input Reference PWA, A3, NTSC	1	3-71
1420079	N	Address Generator I PWA, A14, A25	2	3-319
1420124	W	Comb Filter PWA, A2, NTSC	1	3-39
1420148	M	120V Rear Fan Assembly	1	2-105
1420150	K	Connector Panel Assembly	1	2-96
1420154	E	Analog Chassis Assembly	1	2-5
1420161	J	Regulator Heatsink Assembly	1	2-13
1420177	G	Miscellaneous Parts Kit	2	5-1
1420180	V	Keyboard Assembly	2	4-3
1420181	N	Keyboard Switch PWA	2	4-7
1420184	AB	CPU Keyboard PWA	2	4-16
1420200	AE	Ampex Digital Optics (ADO)	1	1-1
1420201	AH	Basic Assembly	1	1-3
1420203	F	Floppy Disc Option	2	4-101
1420207	C	Video Out Cable Assembly	2	4-91
1420208	D	Remote Cable Assembly	2	4-92
1420209	A	230V AC Cable Assembly	1	2-111
1420214	C	230V Rear Fan Assembly	1	2-108
1420215	B	230V Lower Fan Assembly	1	2-114
1420217	F	230V Circuit Breaker Assembly	1	2-118
1420218	C	230V Power Supply Chassis Assembly	1	2-88
1420244	E	120V AC Voltage Cable Assembly	1	2-110
1420258	M	Control Interface PWA	2	4-75
1420314	C	Interconnect Digital Motherboard Cable	1	2-101
1420315	C	Interconnect Analog Motherboard Cable	1	2-100
1420316	B	Jumper Cable	1	2-102
1420369	K	Output Reference PWA, A6, NTSC	1	3-131
1420376	F	120V Lower Fan Assembly	1	2-112
1420419	G	System Interconnect Cable	2	5-8
1420420	B	Internal Connector Cable	2	4-13
1420422	F	Interconnect Keyboard Cable	2	5-9
1420424	M	D/A Converter PWA, A4	1	3-101
1420431	C	RFI Filter	2	4-83
1420433	C	AC Chassis Cable Assembly	2	4-79
1420434	F	DC Power Harness	2	4-85

NUMERICAL LIST OF ASSEMBLIES
(Continued)

ASSEMBLY NO.	REV	TITLE	VOLUME NO.	PAGE NO.
1420435	C	AC Fan Cord	2	4-87
1420436	D	CRT Cable Assembly	2	4-96
1420437	D	Signal Interconnect Cable Assembly	2	4-88
1420438	A	Disk Drive Cable Assembly	2	4-102
1420439	D	Control Processor Cable	2	4-89
1420440	D	Input/Output Cable Assembly	2	4-90
1420450	G	Cover Assembly	2	4-28
1420454	F	Video Cable Output Processor	1	2-103
1420455	F	High Level Control Cable	1	2-104
1420458	C	Digital Test Signal Generator PWA, NTSC	2	3-409
1420465	F	Digital Door Assembly	1	2-74
1420466	E	Analog Door Assembly	1	2-75
1420471	S	Input/Output PWA	2	4-57
1420477	E	CRT Monitor Modification Assembly	2	4-93
1420479	J	Control Unit Miscellaneous Parts Kit	2	5-6
1420482	C	Floppy Disk Drive Modification	2	4-103
1420501	G	120V Line Voltage Kit	1	2-77
1420502	F	230V Line Voltage Kit	1	2-78
1464202	M	A/D Converter PWA, A1, PAL	1	3-27
1464226	N	Input Reference PWA, A3, PAL	1	3-85
1464229	K	Output Reference PWA, A6, PAL	1	3-140
1464232	K	Video Output Processor PWA, A5, PAL	1	3-121
1464259	F	Chroma/Key Memory PWA, A18, A19, PAL	1	3-241
1464262	E	Y Memory PWA, A2-A6, A16, A17	1	3-189
1464283	E	Low Level Controller PWA, A26	2	3-366
1464286	G	High Level Controller PWA, A27	2	3-389
1464292	M	A/D Converter Digi-Matte PWA, A1 (OPTION)	1	3-1
1464298	J	Color Processor PWA, A18, PAL	1	3-223
1464301	G	Horizontal Processor PWA, A22, PAL	2	3-363
1464325	M	120V Power Supply Chassis Assembly	1	2-79
1464326	H	120V Transformer Assembly	1	2-85
1464366	L	Signal System Assembly	1	2-1
1464371	B	Digital Test Signal Generator PWA, PAL	2	3-415
1464507	—	ROM Adapter PWA	2	5-13
1464512	B	Control Processor PWA	2	4-37
1464539	A	Single Channel Kit (Accessory)	2	5-10
1464542	—	Input Video Processor PWA, A1, NTSC	1	3-149
1464549	B	Video Out Processor PWA, A5, NTSC	1	3-111
1464559	B	Joystick Assembly	2	4-15
1464565	B	230V Transformer Kit	1	2-93
1464582	—	Analog Motherboard PWA	1	2-8
1464614	C	Output Control PWA, A15, PAL	2	3-347
1464633	C	Output Control PWA, A15, NTSC	2	3-333
1464636	B	Key Processor PWA, A12, A23	2	3-283
1464800	—	Joystick Replacement Kit	2	4-14
1464866	A	+5V Digital Power Supply Harness Kit	2	5-20

NUMERICAL LIST OF ASSEMBLIES
(Continued)

ASSEMBLY NO.	REV	TITLE	VOLUME NO.	PAGE NO.
1464978	A	Input Video Processor Kit, NTSC	2	4-97
1464980	—	Digi-Matte Kit, NTSC	2	4-98
1464981	D	Hardware Signal System (5.0) Upgrade Kit, NTSC. .	2	5-17
1464982	B	Control Panel Field (5.0) Upgrade Kit	2	5-11
1464989	—	Key Interpolator PWA	1	3-178
1464996	—	Input Video Processor PWA, A1, PAL	1	3-173
1465002	D	Comb Filter PWA, A2, PAL	1	3-57
1465025	B	+5V Power Supply Assembly	1	2-72
1465043	A	120V Circuit Breaker Assembly	1	2-116
1465054	A	Input Video Processor Kit, PAL	2	4-99
1465056	—	Digi-Matte Kit, PAL	2	4-100
1465057	D	Hardware Signal System (5.0) Upgrade Kit, PAL . .	2	5-19
1465091	A	120V Control Unit Assembly.	2	4-1
1465092	A	120V Monitor Housing Assembly	2	4-23
1465093	B	120V Chassis Assembly	2	4-29
1465094	A	230V Control Unit Assembly.	2	4-2
1465095	A	230V Monitor Housing Assembly	2	4-26
1465096	B	230V Chassis Assembly	2	4-33

NUMERICAL LIST OF SCHEMATICS

SCHEMATIC NO.	REV.	TITLE	VOLUME NO.	PAGE NO.
1386294	—	5V/12V Power Supply (Ref. 570-554/570-570)	2	D-5
1409725	M	Digital Motherboard Wire Routing List	1	2-21
1420019	K	Interpolator PWA, A10, A24	1	3-258
1420028	L	Coefficient Store PWA, A9, A20	1	3-249
1420031	N	Vertical Processor PWA, A11	1	3-271
1420037	V	Address Generator II PWA, A13, A24	2	3-305
1420064	D	Analog Voltage Regulator/Regulator Heatsink PWA	1	2-19
1420070	L	A/D Converter PWA, A1, NTSC	1	3-23
1420077	M	Input Reference PWA, A3, NTSC	1	3-79
1420081	M	Address Generator I PWA, A14, A25	2	3-323
1420126	N	Comb Filter PWA, A2, NTSC	1	3-53
1420183	F	Keyboard Switch PWA	2	4-10
1420186	V	CPU Keyboard PWA	2	4-20
1420260	F	Control Interface PWA	2	4-77
1420371	J	Output Reference PWA, A6, NTSC	1	3-137
1420423	—	AC/DC Interconnect Wiring Diagram, NTSC	1	1-5
1420426	H	D/A Converter PWA, A4,	1	3-107
1420432	B	AC Cable Assembly Wiring Diagram	2	4-81
1420457	B	Analog/Digital Motherboard and Connector Panel Wiring Diagram	1	2-4
1420460	E	Digital Test Signal Generator PWA	2	3-413
1420473	H	Input/Output PWA	2	4-62
1420480	B	Remote Control Cable Wiring Diagram	2	5-7
1464204	C	A/D Converter PWA, A1, PAL	1	3-35
1464228	K	Input Reference PWA, A3, PAL	1	3-93
1464231	F	Output Reference PWA, A6, PAL	1	3-145
1464234	E	Video Output Processor PWA, A5, PAL	1	3-127
1464261	B	Chroma/Key Memory PWA, A8, A19	1	3-231
1464264	A	Y Memory PWA, A2-A6, A16, A17	1	3-193
1464285	A	Low Level Controller PWA, A26	2	3-371
1464288	C	High Level Controller PWA, A27	2	3-393
1464289	A	AC/DC 230V Interconnect Wiring Diagram	1	2-89
1464294	J	A/D Converter Digi-Matte PWA, A1 (OPTION)	1	3-9
1464300	E	Color Processor PWA, A7, A18	1	3-210
1464303	C	Horizontal Processor PWA, A22	2	3-355
1464327	C	AC/DC 120V Interconnect Wiring Diagram	1	2-83
1464509	—	ROM Adaptor PWA	2	5-15
1464514	A	Control Processor PWA	2	4-42
1464544	—	Input Video Processor PWA, A1, NTSC	1	3-153
1464551	B	Video Output Processor PWA, A5, NTSC	1	3-117
1464565	A	230V Transformer Kit	1	2-114
1464584	—	Analog Motherboard PWA, Wiring Diagram/Schematic	1	2-11
1464635	B	Output Control PWA, A15	2	3-337
1464638	—	Key Processor PWA, A12, A23	2	3-287
1464991	—	Key Interpolator PWA	1	3-181
1465004	C	Comb Filter PWA, A2, PAL	1	3-65
Appendix	B-E	Reference Vendor Schematics	2	B-i

LIST OF SCHEMATICS BY PWA NUMBER

PWA NO.	TITLE	SCHEMATIC NO.	PAGE NO.
1	A/D Converter Digi-Matte PWA, (OPTION)	1464294	3-9
1	A/D Converter PWA, NTSC	1420070	3-23
1	A/D Converter PWA, PAL	1464204	3-35
1	Input Video Processor PWA, NTSC	1464544	3-153
2	Comb Filter PWA, NTSC	1420126	3-53
2	Comb Filter PWA, PAL	1464365	3-65
2-6,16,17	Y Memory PWA	1464264	3-193
3	Input Reference PWA, NTSC	1420077	3-79
3	Input Reference PWA, PAL	1464228	3-93
4	D/A Converter PWA	1420426	3-107
5	Video Output Processor PWA, PAL	1464234	3-127
5	Video Output Processor PWA, NTSC	1464551	3-117
6	Output Reference PWA, NTSC	1420371	3-137
6	Output Reference PWA, PAL	1464231	3-145
7, 18	Color Processor PWA	1464300	3-210
8, 19	Chroma/Key Memory PWA	1464261	3-231
9, 20	Coefficient Store PWA	1420028	3-249
10, 24	Interpolator PWA	1420019	3-258
11	Vertical Processor PWA	1420031	3-271

VOLUME 2

12, 23	Key Processor PWA	1464638	3-287
13, 24	Address Generator II PWA	1420037	3-305
14, 25	Address Generator I PWA	1420081	3-323
15	Output Control PWA	1464635	3-337
22	Horizontal Processor PWA, PAL	1464303	3-355
26	Low Level Controller PWA	1464285	3-371
27	High Level Controller PWA	1464288	3-393

ITEM NO.	PART NUMBER	DESCRIPTION	REF DESIG	QTY REQD PER DASH NUMBER -01
1				
2				
3	1464638	SCHEMATIC		(-)
4				
5	1409670-BN	LABEL, EXTRACTOR ARM, PWA		1
6	1409976-AA	INSULATOR, STIFFENER		1
7	1409976-AB	INSULATOR, STIFFENER		1
8	1409997-AA	STIFFENER, PWB		1
9	1409997-AB	STIFFENER, PWB		1
10				
11				
12	1420313-01	PROM ASSEMBLY REF: TBP18S030	7P	1
13	1420322-01	REF: 87S181 1	10R	1
14	1420323-01		10T	1
15	1420324-01		11R	1
16	1420325-01	REF: 87S181 1	11T	1
17	1420362-01	REF: TBP18S22	2G	1
18	1464999-01	REF: 87S181 1	2E	1
19	1464501-01	PROM ASSEMBLY REF: 27S191	2P	1
20				
21				
22	064-652	CAPACITOR, CER., .01uF, 50V, ±20%	C53	1
23	064-653	CAPACITOR, CER., 0.1uF, 50V, ±20%	C2-39,41-52,54-93	90
24				
25	037-965	CAPACITOR, TANT., 120uF, 10V, ±20%	C1,40	2
26				
27	000-007	INTEGRATED CIRCUIT, 25S10	10J,K,L,M,11J,K, 11L,M	8
28	000-128	74S283	3P,4N,5N,8K,L,N, 9B,F,J,L,M,10B,F, 11B,F	15
29	000-152	10125	1K	1
30	001-086	74H87	6L,7M	2
31	001-091	74S112	2H	1
32	587-626	74S02	2L	1
33	589-537	74LS374	2N	1
34	589-821	74LS85	1A,D	2
35	589-823	74LS138	1S,T,2S,T	4
36	589-825	INTEGRATED CIRCUIT, 74LS157	3S,T	2

LM-1464636

AMPEX	Ampex Corporation REDWOOD CITY, CALIFORNIA	CODE IDENT NO 92739	LIST OF MATERIALS	LM- 1464636 SHEET 2 OF 2	REV B

ITEM NO.	PART NUMBER	DESCRIPTION	REF DESIG	QTY REQD PER DASH NUMBER -01
37	589-837	INTEGRATED CIRCUIT, 74S00	1M,2K,5M	3
38	589-838	74S04	1H,2A,3N,7J,8B,F	6
39	589-839	74S08	2J	1
40	589-847	74S86	6J	1
41	589-850	74S163	1E,F,G,5J,L,7T,9S, 8T	8
42	590-227	25S09	1B,C,2B,C,5A,B,C,D,E,F, 5G,H,6A,B,C,D,E,F,G,H, 8J,M,P,9P	24
43	590-335	74LS273	4R,S,T,5R,S,T	6
44	590-461	74LS112	1L	1
45	590-606	74LS283	7A,B,C,D,E,F,G,H	8
46	590-620	74LS86	7S	1
47	590-622	74LS670	3J,K,L,M,4J,K,L, 4M	8
48	590-845	74S32	6K	1
49	590-853	74S139	2M,5K	2
50	590-855	74S374	1J,N,P,R,2D,3R,4P,5P,6M, 6N,P,R,7K,L,N,R,8A,D,E, 8H,R,9A,D,E,H,K,N,10N,P, 11N,P	31
51	590-870	93422	3A,B,C,D,E,F,G,H,4A,B,C, 4D,E,F,G,H	16
52	590-931	25LS2521	6S,T	2
53	590-987	INTEGRATED CIRCUIT, MPY8HJ-1	11A,D,E,H	4
54				
55				
56				
57	066-665	RESISTOR, C.F., 1K OHMS, 1/4W, 5%	R4	1
58	066-811	RESISTOR, C.F., 51 OHMS, 1/4W, 5%	R1,3	2
59	066-838	RESISTOR, C.F., 330 OHMS, 1/4W, 5%	R2	1
60				
61	582-279	I.C., MTG. HDW., SOCKET, 22 PIN	REF:3A,B,C,D,E,F,G,H,4A, 4B,C,D,E,F,G,H	16
62	582-280	24 PIN	REF:2E,P,10R,T,11R,T	6
63	582-282	40 PIN	REF:11A,D,E,H	4
64	582-330	14 PIN	REF:1H,M,2A,J,K,L,3N,5M,6J, 6K,L,7J,M,S,8B,F	16
65	582-331	16 PIN	REF:1A,B,C,D,E,F,G,K,L,S, 1T,2B,C,H,M,S,T,3J,K, 3L,M,P,S,T,4J,K,L,M,N,5A,B,C,D,E,F, 5G,H,J,K,L,N,6A,B,C,D,E,F,G,H,7A, 7B,C,D,E,F,G,H,P,T,8J,K,L,M,N,P,S, 8T,9B,F,J,L,M,P,10B,F,11K,L,M,11B,F, 11J,K,L,M	85
66	582-333	I.C., MTG. HDW., SOCKET, 20 PIN	REF:1J,N,P,R,2D,G,N,3R,4P, 4R,S,T,5P,R,S,T,6M,N, 6P,R,S,T,7K,L,N,R,8A,D,E,H,R,9A,D, 9E,H,K,N,10N,P,11N,P	41
67				
68				
69	471-060	SCREW, PAN HD., XREC, #4-40 X .250 LG		6
70	493-005	NUT, HEX, NYLON LOCK, #4-40		6
71	530-477	ENCLOSURE PART, CARD INSERTER/EXTRACTOR		2

NOTES:

1. STATIC SENSITIVE DEVICE, SPECIAL HANDLING REQUIRED PER AMPEX STD HE1-1.

LM-1464636

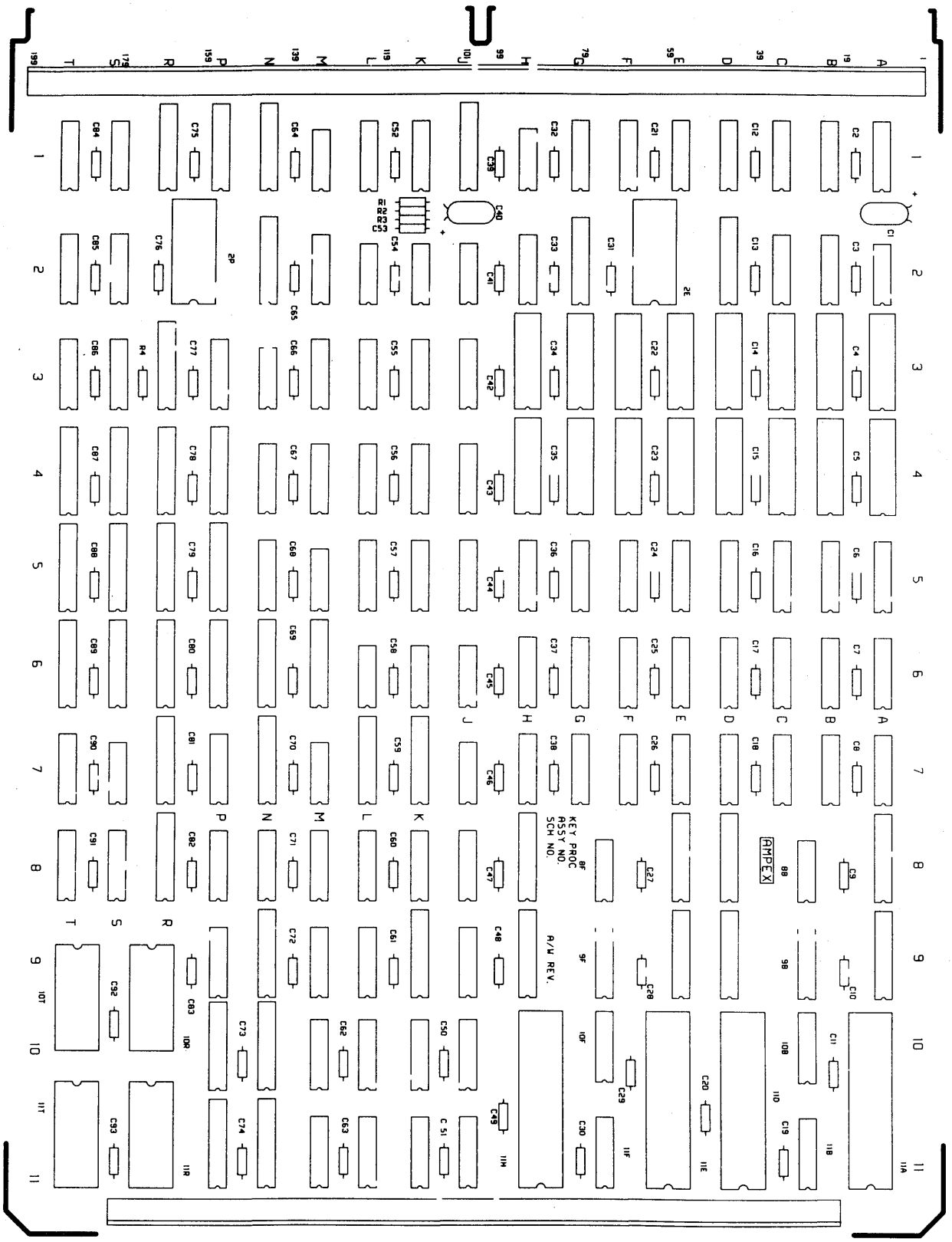

Assembly No. 1464636-01B. Key Processor PWA, A12, A23

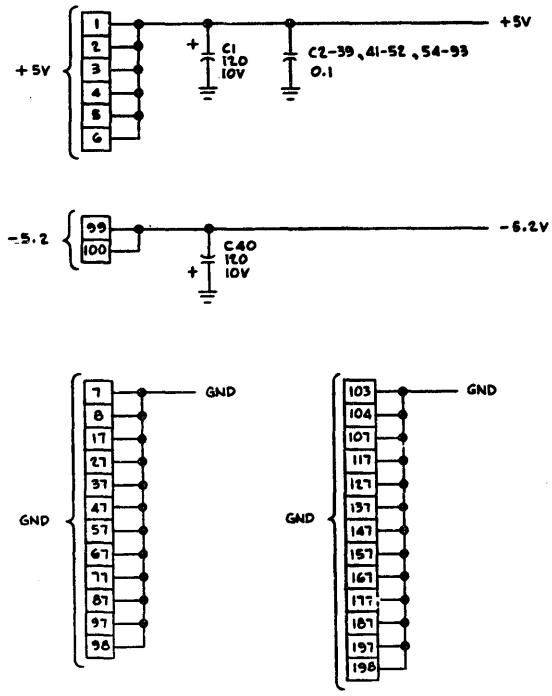

REFERENCE DESIGNATION	
LAST USED	NOT USED
C93	
R4	

NOTES : UNLESS OTHERWISE SPECIFIED ;

1. RESISTANCE VALUES ARE IN OHMS 1/4W, 5%.
2. CAPACITANCE VALUES ARE IN MICROFARADS.

3 CAUTION STATIC SENSITIVE, SPECIAL HANDLING REQUIRED PER AMPEX STD. HE1-1

REF DES	7P	2F 3	2P	10R 3	10T 3	11R 3	11T 3	2G
AMPEX P/N	1420313-01	1464999-01	1465001-01	1420322-01	1420323-01	1420324-01	1420325-01	1420362-01
VENDOR P/N	TBP185030	87S181	27S191	87S181	87S181	87S181	87S181	TBP18S22
VOLTAGE (PIN)	+5V (16)	+5V (24)	+5V (24)	+5V (24)	+5V (24)	+5V (24)	+5V (24)	+5V (20)
GND (PIN)	(8)	(12)	(12)	(12)	(12)	(12)	(12)	(10)

REF DES	10J,K,L,M, 11J,K,L,M	6L, 7M	1M, 2K, 5M	7J, 8B, F, 1H, 2A, 3N	2H	1K	6J	1S,T, 2S,T	2M, 5K	6K
AMPEX P/N	000-007	586-748	589-837	589-838	586-978	587-132	589-847	589-823	590-853	590-845
VENDOR P/N	25S10	74H87	74S00	74S04	74S112	10125	74S86	74LS138	74S139	74S32
VOLTAGE (PIN)	+5V (16)	+5V (14)	+5V (14)	+5V (14)	+5V (16)	+5V (9) -5.2V (8)	+5V (14)	+5V (16)	+5V (16)	+5V (14)
GND (PIN)	(8)	(7)	(7)	(7)	(8)	(16)	(7)	(8)	(8)	(7)

REF DES		2L	3J,K,L,M 4J,K,L,M	7S	1A,D	3S,T	1L	7A,B,C,D, E,F,G,H	1E,F,G,5J,L 7T,8S,T	4R,S,T 5R,S,T
AMPEX P/N		587-626	590-622	590-620	589-821	589-825	590-461	590-606	589-850	590-335
VENDOR P/N		74S02	74LS670	74LS86	74LS85	74LS157	74LS112	74LS283	74S163	74LS273
VOLTAGE (PIN)		+5V (14)	+5V (16)	+5V (14)	+5V (16)	+5V (16)	+5V (14)	+5V (16)	+5V (16)	+5V (20)
GND (PIN)		(7)	(8)	(7)	(8)	(8)	(7)	(8)	(8)	(10)

REF DES	1J,N,P,R,2D,3R,4P 5P,6M,N,P,R,7K,L,N, R,8A,D,E,H,R,9A,D, E,H,K,N,10N,P,11N,P	2N	3R,4N,5N, 8K,L,N,9B, F,J,L,M,10B, F,11B,F	6S,T	1B,C,2B,C,5A,B,C,D,E, F,G,H,6A,B,C,D,E,F, G,H,8J,M,P,9P	3A,B,C,D,E,F, G,H,4A,B,C, D,E,F,G,H	11A,D,E,H	2J
AMPEX P/N	590-055	589-537	589-605	590-931	590-227	590-870	590-987	589-839
VENDOR P/N	74S374	74LS374	74S283	25LS2521	25S09	93422	MPY8HJ-1	74S08
VOLTAGE (PIN)	+5V (20)	+5V (20)	+5V (16)	+5V (20)	+5V (16)	+5V (22)	+5V (30)	+5V (14)
GND (PIN)	(10)	(10)	(8)	(10)	(8)	(8)	(32)	(7)

Schematic No. 1464638—. Key Processor PWA, A12, A23 (Sheet 1 of 7)

ITEM NO.	PART NUMBER	DESCRIPTION	REF DESIG	QTY REQD PER DASH NUMBER -02	-03	-04	-05	-06	-07	-08	-09	-10
1												
2												
3	1420037	SCHEMATIC		K	M	S	T	T	T	T	U	V
4	1409670-BR	LABEL, EXTRACTOR ARM, PWA				-	1	1	1	1	1	1
5	1409670-BC	LABEL, EXTRACTOR ARM, PWA		1	1	1	-	-	-	-	-	-
6	1409976-AA	INSULATOR, STIFFENER		1	1	1	1	1	1	1	1	1
7	1409976-AB	INSULATOR, STIFFENER		1	1	1	1	1	1	1	1	1
8	1409997-AA	STIFFENER, PWB		1	1	1	1	1	1	1	1	1
9	1409997-AB	STIFFENER, PWB		1	1	1	1	1	1	1	1	1
10	1420294-03	PROM ASSY REF: TBP18S030	10L	1	1	1	1	1	1	1	1	1
11	1420293-01	REF: TBP18S030	2L	1	1	1	1	1	1	1	1	1
12	1420294-01	REF: TBP18S030	10L	-	-	-	-	-	-	-	-	-
13	1420295-01	REF: TBP28S42	3G	1	1	1	1	1	1	1	-	-
14	1420296-01	PROM ASSY REF: TBP28S42	10B	1	1	1	1	1	1	1	1	1
15	1420295-02	PROM ASSY, REF: TBP28S42	3G									1
16	037-965	CAPACITOR, TANT., 120uF, 10V, ±20%	C2	1	1	1	1	1	1	1	1	1
17	064-652	CAPACITOR, CER., .01uF, 50V, ±20%	C37	1	1	1	1	1	1	1	1	1
18	064-653	CAPACITOR, CER., .1uF, 50V, ±20%	C1,3-36, 38-46	44	44	44	44	44	44	44	44	44
19					-							
20	000-007	INTEGRATED CIRCUIT, 25S10	6C,D,E,F,7C, D,E,F	8	8	8	8	8	8	8	8	8
21	000-008	LM3911	3B	1	1	1	1	1	1	1	1	1
22	000-009	MK4801-55 1	1G,H,K,6G, H,K	6	6	6	6	6	6	6	6	6
23	589-837	74S00	5N	1	1	1	1	1	1	1	1	1
24	589-838	74S04	4B,7G,P	3	3	3	3	3	3	3	3	3
25	586-978	74S112	5C	1	1	1	1	1	1	1	1	1
26	589-840	74S10	4A,6P	2	2	2	2	2	2	2	2	2
27	587-132	10125	1M	1	1	1	1	1	1	1	1	1
28	589-847	74S86	5F,R	2	2	2	2	2	2	2	2	2
29	589-848	74S138	1N,P	2	2	2	2	2	2	2	2	2
30	589-937	74S174	4G	1	1	1	1	1	1	1	1	1
31	587-199	74S134	10E,G	2	2	2	2	2	2	2	2	2
32	587-282	74S260	8B	1	1	1	1	1	1	1	1	1
33	590-845	74S32	8G	1	1	1	1	1	1	1	1	1
34	590-443	74S02	10F	1	1	1	1	1	1	1	1	1
35	589-839	74S08	5G	1	1	1	1	1	1	1	1	1
36	589-821	74LS85	3M,N,P,R,4M, N,P,R	8	8	8	8	8	8	8	8	8
37	589-933	INTEGRATED CIRCUIT, 74LS161	6R	1	1	1	1	1	1	1	1	1

LM-1420035

AMPEX	Ampex Corporation REDWOOD CITY, CALIFORNIA	CODE IDENT NO. 92739	LIST OF MATERIALS	LM-1420035 SHEET 2 of 2	REV AF

ITEM NO.	PART NUMBER	DESCRIPTION	REF DESIG	QTY REQD PER DASH NUMBER -02	-03	-04	-05	-06	-07	-08	-09	-10
38	589-850	INTEGRATED CIRCUIT, 74S163	9M,N,P,10H,J,K	6	6	6	6	6	6	6	6	6
39	589-224	74S381	9C,D,E,F	4	4	4	4	4	4	4	4	4
40	590-335	74LS273	2M,P,R,5L,M,P,8M,P	8	8	8	8	8	8	8	8	8
41	590-859	74S182	9G	1	1	1	1	1	1	1		1
42	590-855	74S374	1A,B,C,D,E,F,L,R,2G,H,J,K,4L,5B,D,E,H,J,K,6A,L,M,N,7A, 8C,D,E,F,L,N,9B,L,10C,D,M	35	35	35	35	35	35	35	35	35
43	589-605	74S283	5A,6B,7L,M,N,9H,J,K	8	8	8	8	8	8	8	8	8
44	590-868	74S244	2N,3H,J,K,L,4H,J,K	8	8	8	8	8	8	8	8	8
45	590-227	25S09	7H,J,K,8H,J,K,9A	7	7	7	7	7	7	7	7	7
46	590-863	25LS2517	2A,B,7B,8A	4	4	4	4	4	4	4	4	4
47	000-042	MPY16HJ	3C,3E	2	2	2	2	2	2	2	2	2
48	589-820	INTEGRATED CIRCUIT, 74LS74	8R	1	1	1	1	1	1	1	1	1
49												
50	066-811	RESISTOR, C.F., 51 OHMS, 1/4W, 5%	R4,5	2	2	2	2	2	2	2	2	2
51	066-818	470	R7	1	1	1	1	1	1	1	1	1
52	066-829	6.8K	2,3	3	3	3	3	3	3	3	3	2
53	066-838	330	R6	1	1	1	1	1	1	1	1	1
54	066-665	RESISTOR, C.F., 1K OHMS, 1/4W, 5%	R8	1	1	1	1	1	1	1		1
55	066-720	" " , 3.3k OHMS, 1/4W, 5%	R1									1
56	582-333	I.C., MTG HDW, SOCKET, 20 PIN	REF:1A,B,C,D,E,F,L,R,2A,B,G,H,J,K,M,N,P,R,3H,J,K,L,4H,J,K,L,5B,D,E,H,J,K,L,M,P,6A,L,M,N,7A,B,8A,C,D,E,F,L,M,N,P,9B,C,D,E,F,L,10C,D,M,3G,10B	61	61	61	61	61	61	61	61	61
57	582-429	64 PIN	REF:3C,3E	2	2	2	2	2	2	2	2	2
58	582-329	8 PIN	REF:3B	1	1		1	1	1	1		1
59	582-330	14 PIN	REF:4A,B,5G,F,N,R,6P,7G,P,8B,G,R,10F	13	13	13	13	13	13	13	13	13
60	582-280	24 PIN	REF:1G,H,K,6G,H,K	6	6	6	6	6	6	6	6	6
61	582-331	I.C., MTG HDW, SOCKET, 16 PIN	REF:1M,N,P,2L,3M,N,P,R,4G,M,N,P,R,5A,C,6B,C,D,E,F,R,7C,D,E,F,H,J,K,L,M,N,8H,J,K,9A,G,H,J,K,M,N,P,10E,G,H,J,K,L	48	48	48	48	48	48	48	48	48
62												
63												
64	471-060	SCREW, PAN HD., X-REC, 4-40 X .250 LG		6	6	6	6	6	6	6	6	6
65	493-005	NUT, HEX, NYLON LOCK, 4-40		6	6	6	6	6	6	6	6	6
66	530-477	ENCLOSURE PART, CARD INSERTER/EXTRACTOR		2	2	2	2	2	2	2	2	2

NOTES:

1. STATIC SENSITIVE DEVICE; SPECIAL HANDLING REQUIRED PER AMPEX STD HE1-1

LM-1420035

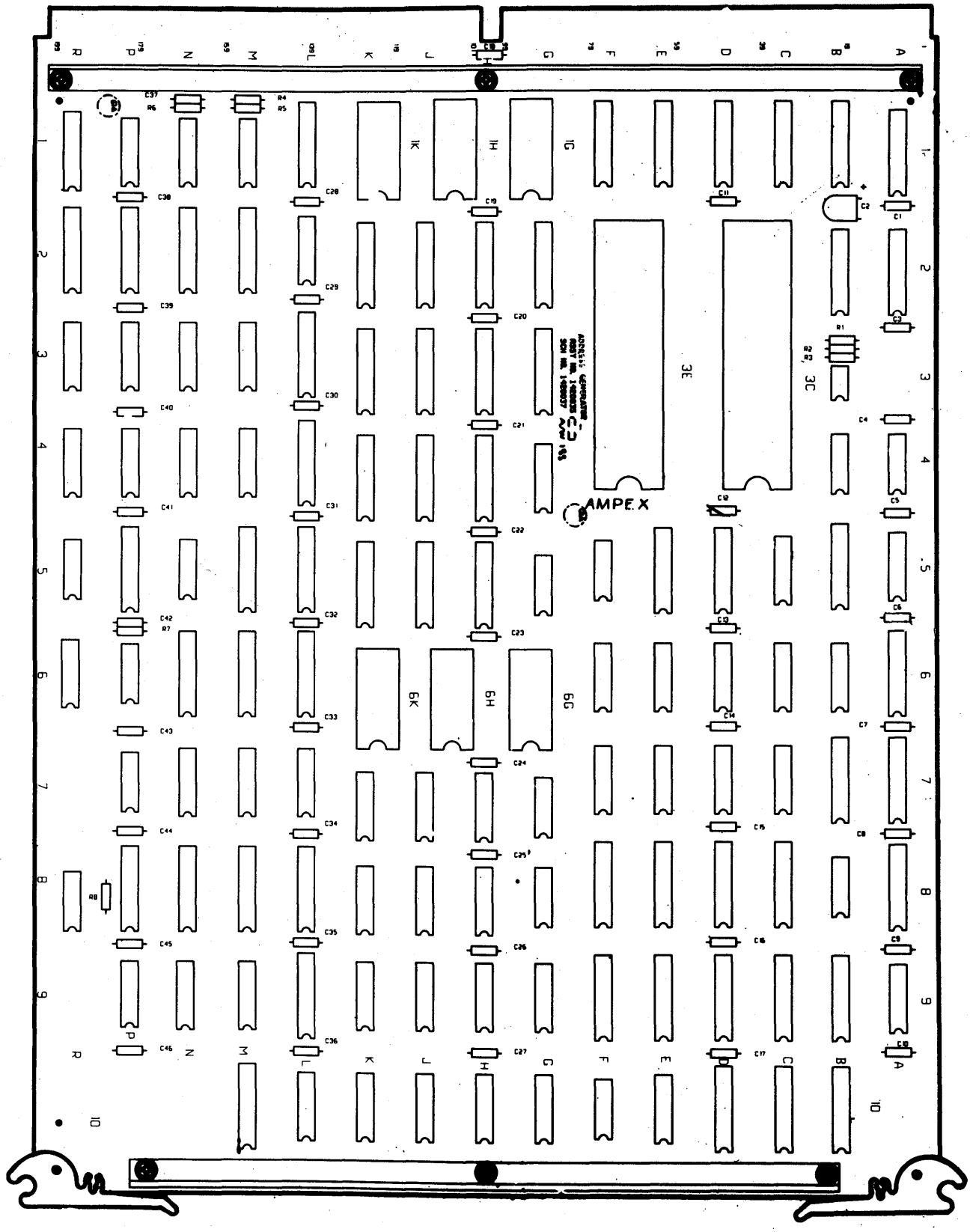

Assembly No. 1420035-10AF. Address Generator II PWA, A13, A24

ITEM NO.	PART NUMBER	DESCRIPTION	REF DESIG	QTY REQD PER DASH NUMBER -01	-02	-03	-04	-05	-06	-07	-08
1											
2											
3	1420081	SCHEMATIC		G	H	H	L	M	M	N	M
4	1409670-BP	LABEL, EXTRACTOR ARM, PWA					-	1	1	1	1
5	1409670-BD	LABEL, EXTRACTOR ARM, PWA		1	1	1	1	-	-	-	-
6	1409987-AA	INSULATOR, STIFFENER		1	1	1	1	1	1	1	1
7	1409976-AB	INSULATOR, STIFFENER		1	1	1	1	1	1	1	1
8	1409997-AA	STIFFENER, PWB		1	1	1	1	1	1	1	1
9	1409997-AB	STIFFENER, PWB		1	1	1	1	1	1	1	1
10											
11	1420284-01	PROM ASSY REF: TBP28S42	2J	1	1	1	1	1	1	1	1
12	1420285-01	REF: TBP28S42	4J	1	1	1	1	1	1	1	1
13	1420286-01	REF: TBP18S42	10K	1	1	1	1	1	1	1	1
14	1420287-01	REF: TBP18S42	10L	1	1	1	1	1	1	1	1
15	1420288-01	REF: TBP18S42	8M	1	1	1	1	1	1	1	1
16	1420289-01	REF: 82S100	6U,9E	1	1	1	2	2	2	2	2
17	1420290-01	REF: 82S100	6S,9G	1	1	1	2	2	2	2	2
18	1420291-01	REF: 82S100	6S	1	1	1	-	-	-	-	-
19	1420292-01	PROM ASSY REF: 82S100	6U	1	1	1	-	-	-	-	-
20											
21	037-965	CAPACITOR, TANT., 120uF, 10V, ±20%	C1,55	2	2	2	2	2	2	2	2
22	064-652	CER., .01uF, 50V, ±20%	C41	1	1	1	1	1	1	1	1
23	064-653	CAPACITOR, CER., .1uF, 50V, ±20%	C2-40,42-54, 56-92	89	89	89	89	89	89	89	89
24											
25	000-007	INTEGRATED CIRCUIT, 25S10	6A,B,C,D,7A,B, C,D,P,8B,C,D, N,P,9N,P,10N, P,R,S,T,U	22	22	22	22	22	22	22	22
26	589-837	74S00	7U,9M,10G	3	3	3	3	3	3	3	3
27	589-838	74S04	8A	1	1	1	1	1	1	1	1
28	589-843	74S20	1L	1	1	1	1	1	1	1	1
29	589-846	74S74	7S,10J	2	2	2	2	2	2	2	2
30	000-152	10125	1K	1	1	1	1	1	1	1	1
31	589-823	74LS138	1P,2N,P	3	3	3	3	3	3	3	3
32	590-606	74LS283	2A,B,C,D,E,F,G,H,3A, B,C,D,E,F,G,H	16	16	16	16	16	16	16	16
33	589-850	74S163	1J	1	1	1	1	1	1	1	1
34	000-127	74S381	3R,S,T,U,4R,S,T,U6E, F,G,H,7E,F,G,H	16	16	16	16	16	16	16	16
35	590-335	74LS273	4A,B,C,D,E,F, G,H	8	8	8	8	8	8	8	8
36	590-859	INTEGRATED CIRCUIT, 74S182	3N,P,4P,6J,7J, 8J	6	6	6	6	6	6	6	6

LM-1420079

AMPEX Ampex Corporation REDWOOD CITY, CALIFORNIA	CODE IDENT NO. 92739	LIST OF MATERIALS	LM-1420079 SHEET 2 of 2	REV N

ITEM NO.	PART NUMBER	DESCRIPTION	REF DESIG	QTY REQD PER DASH NUMBER -01	-02	-03	-04	-05	-06	-07	-08
37	590-584	INTEGRATED CIRCUIT, 74LS244	5D,5K	2	2	2	2	2	2	2	2
38	590-847	74LS245	1N	1	1	1	1	1	1	1	1
39	590-855	74S374	1M,2K,L,3J,5A,B,C,J,L,R,S,T,U,6K,L,P,7M,N,8E,F,G,H,9K,L,10M	25	25	25	25	25	25	25	25
40	590-586	74LS374	1A,B,C,D,E,F,G,H,R,S,T,U,2M,R,S,T,U,3M,4M,N,5E,F,G,H,P,7K,L,8K,L	29	29	29	29	29	29	29	29
41	000-128	74S283	3K,L,4K,L	4	4	4	4	4	4	4	4
42	590-227	25S09	7T,8R,S,T,U,9A,B,C,D,J,R,S,T,U,10A,B,C,D	18	18	18	18	18	18	18	18
43	590-987	INTEGRATED CIRCUIT, MPY8HJ-1	6M	1	1	1	1	1	1	1	1
44											
45	066-811	RESISTOR, C.F., 51 OHMS, 1/4W, 5%	R2,3	2	2	2	2	2	2	2	2
46	066-838	RESISTOR, C.F., 330 OHMS, 1/4W, 5%	R1	1	1	1	1	1	1	1	1
47											
48	582-333	I.C., MTG HDW., SOCKET, 20 PIN	REF:1A,B,C,D,E,F,G,H,M,N,R,S,T,U,2J,K,L,M,R,S,T,U,3J,M,R,S,T,U,4A,B,C,D,E,F,G,H,J,M,N,R,S,T,U,5A,B,C,D,E,F,G,H,J,K,L,P,R,S,T,U,6E,F,G,H,K,L,P,7E,F,G,H,K,L,M,N,8E,F,G,H,K,L,M,9K,L,10K,L,M	86	86	86	86	86	86	86	86
49	582-330	14 PIN	REF:1L,7S,U,8A,9M,10G,J	7	7	7	7	7	7	7	7
50	582-281	28 PIN	REF:6S,U,9E,G	4	4	4	4	4	4	4	4
51	582-282	40 PIN	REF:6M	1	1	1	1	1	1	1	1
52	582-331	I.C., MTG HDW., SOCKET, 16 PIN	REF:1J,K,P,2A,B,C,D,E,F,G,H,2N,P,3A,B,C,D,E,F,G,H,K,L,N,3P.4K,L,P,6A,B,C,D,J,7A,B,C,D,J,P,T,8B,C,D,J,N,P,R,8S,T,U,9A,B,C,D,J,N,P,R,S,9T,U,10A,B,C,D,N,P,R,S,T,U	71	71	71	71	71	71	71	71
53											
54	471-060	SCREW, PAN HD., X-REC, 4-40 X .250 LG		6	6	6	6	6	6	6	6
55	493-005	NUT, HEX, NYLON LOCK, 4-40		6	6	6	6	6	6	6	6
56	530-477	ENCLOSURE PART, CARD INSERTER/EXTRACTOR		2	2	2	2	2	2	2	2

LM-1420079

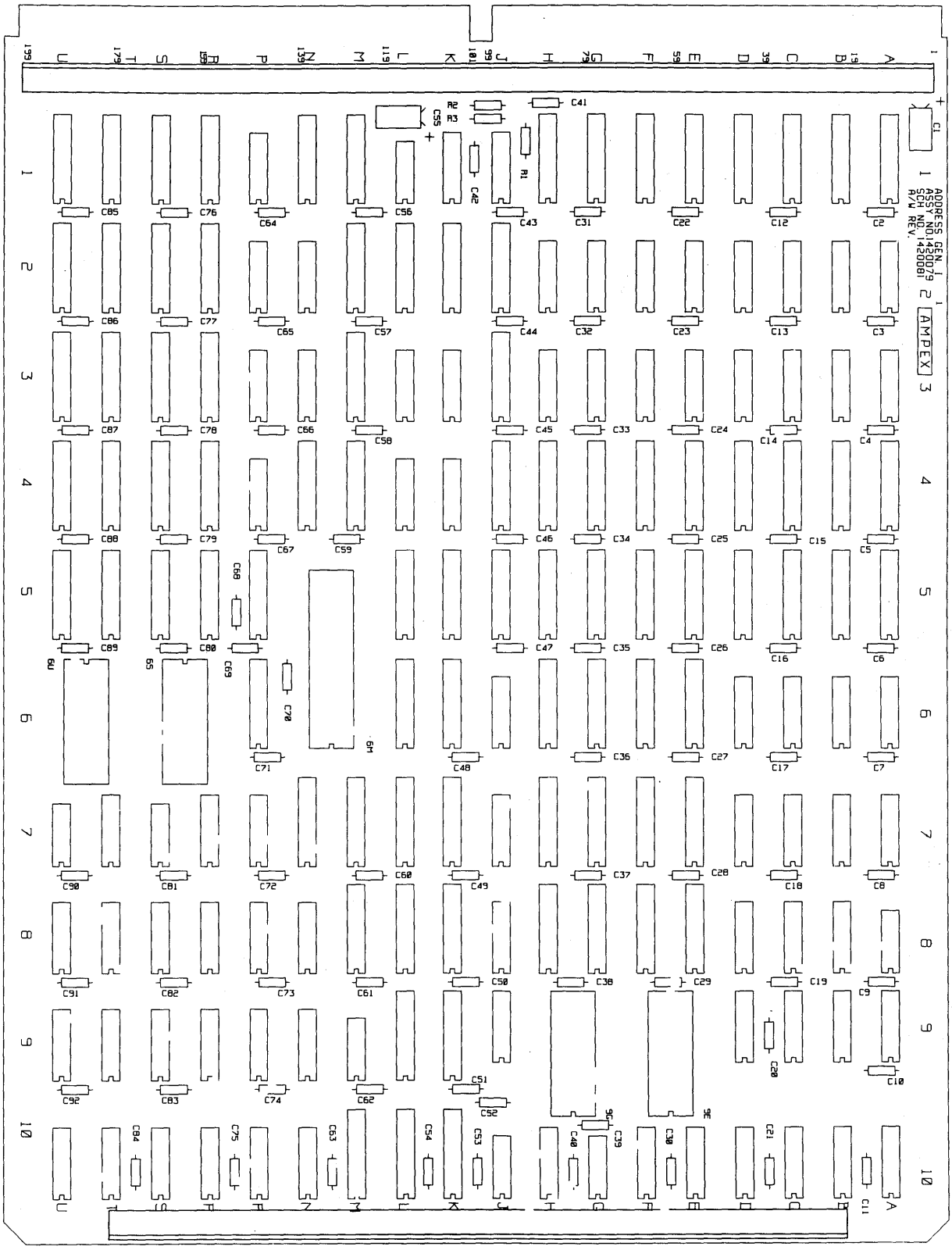

Assembly No. 1420079-08N. Address Generator I PWA, A14, A25

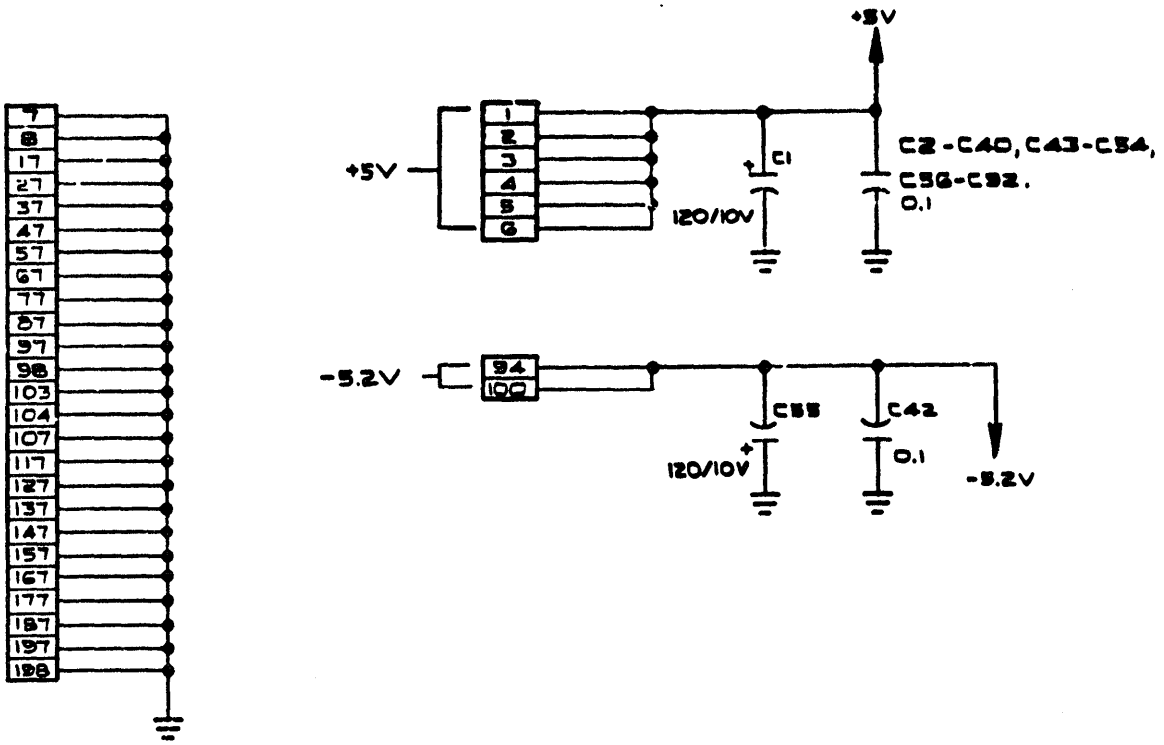

NOTES: UNLESS OTHERWISE SPECIFIED.

1. RESISTANCE VALUES ARE IN OHMS, 1/4W, 5 %
2. CAPACITANCE VALUES ARE IN MICROFARADS.
3. SYMBOL ⊕ INDICATES NAMES OF SIGNALS.

REFERENCE DESIGNATION	2J	4J	10K	10L
AMPEX P/N	1420284-01	1420285-01	1420286-01	1420287-01
VENDOR P/N	74S470	74S470	74S472	74S472
VOLTAGE (PIN)	+5V (20)	+5V (20)	+5V (20)	+5V (20)
GROUND (PIN)	(10)	(10)	(10)	(10)
REFERENCE DESIGNATION	6M	6U, 9E	6S, 9G	
AMPEX P/N	1420289-01	1420289-01	1420290-01	
VENDOR P/N	74S472	82S100	82S100	
VOLTAGE (PIN)	+5V (20)	+5V (28)	+5V (28)	
GROUND (PIN)	(10)	(14)	(14)	
REFERENCE DESIGNATION	8A,B,C,D,E,F,G,H, 3A,B,C,D,E,F,G,H	1J	3R,S,T,U,4R,S,T,U, 6E,F,G,H,7E,F,G,H	4A,B,C,D,E,F,G,H
AMPEX (P/N)	589-606	589-850	000-127	590-334
VENDOR (P/N)	74LS283	74S163	74S381	74LS273
VOLTAGE (PIN)	+5V (16)	+5V (16)	+5V(20)	+5V (20)
GROUND (PIN)	(8)	(8)	(10)	(10)

REFERENCE DESIGNATIONS	
LAST USED	NOT USED
R3 C92	

	6A,B,C,D,7A,B,C,D 7P,8B,C,D,N,P,9NP, 10N,P,R,S,T,U	7U,9M,10B	8A	1L	7H,10J	1K	1P,2N,2P
	000-007	589-837	589-838	589-843	589-846	000-152	589-823
	25S10	74S00	74S04	74S20	74S74	10125	74LS138
	+5V (16)	+5V(14)	+5V (14)	+5 (14)	+5V(14)	+5V (9) & -5.2V(8)	+5V (16)
	(8)	(7)	(7)	(7)	(7)	(16)	(8)
	5D,5K	1N	1M,2K,L,3J,5A,B, 9C,D,J,R,S,T,U,3M,4M,N, 7M,N,6E,F,G,H,9K,L,10M	1L,B,C,D,E,F,G,H,R,S,T,U, 2M,R,S,T,U,3M,4M,N, 5E,F,G,H,P,7K,L,8K,L	3K,L,4K,L	7T,8R,S,T,U,9A,B, 9C,D,J,R,S,T,U,10A, 10B,C,D	6M
	590-584	590-847	590-858	590-856	000-128	590-227	590-987
	74LS244	74LS245	74S374	74LS374	74S283	25S09	PY-8HJ-1
	+5V (20)	+5V (20)	+5V (20)	+5V (20)	+5V (16)	+5 (16)	+5 (30)
	(10)	(10)	(10)	(10)	(8)	(8)	(32)

Schematic No. 1420081M. Address Generator I PWA, A14, A25

ITEM NO.	PART NUMBER	DESCRIPTION	REF DESIG	QTY REQD PER DASH NUMBER -01	-02
1					
2					
3	1464635	SCHEMATIC		(-)	(B)
4					
5	1409670-BE	LABEL, EXTRACTOR ARM, PWA		1	1
6	1409976-AA	INSULATOR, STIFFENER		1	1
7	1409976-AB	INSULATOR, STIFFENER		1	1
8	1409997-AA	STIFFENER, PWB		1	1
9	1409997-AB	STIFFENER, PWB		1	1
10					
11	1465035-01	PROM ASSEMBLY, 87S181 1	5G	1	1
12	1465036-01	PROM ASSEMBLY, 87S181 1	5J	1	1
13	1465039-01	PROM ASSEMBLY, PAL16R4	5N	1	1
14	1465040-01	PROM ASSEMBLY, 27128 1	7M	1	1
15	1465041-01	PROM ASSEMBLY, 27S191	5K	1	1
16	1465042-01	PROM ASSEMBLY, 87S181 1	5M	1	1
17	064-652	CAPACITOR, CER., .01uF, 50V, ±20%	C27,28,30,39,42	5	5
18	064-653	CAPACITOR, CER., .1uF, 50V, ±20%	C2,4,11-22,24,25, 32-36,38,40,41, 43-70	52	52
19					
20	034-156	CAPACITOR, MICA, 5pF, 500V, ±.5pF	C7	1	1
21	034-180	39pF, 500V, ±5%	C5	1	1
22	034-183	62pF, 500V, ±5%	C9	1	1
23	034-207	24pF, 500V, ±5%	C23	1	1
24	034-215	10pF, 500V, ±.5pF	C6	1	1
25	056-022	CAPACITOR, MICA, 6.8pF, 500V, ±.5pF	C8	1	1
26					
27					
28	035-734	CAPACITOR, MYLAR, .01uF, 50V, 5%	C31		1
29	055-166	CAPACITOR, MYLAR, .001uF, 50V, 5%	C10		1
30					
31	037-812	CAPACITOR, TANT., 10uF, 25V, ±20%	C3,26,29	3	3
32	037-965	CAPACITOR, TANT., 120uF, 10V, ±20%	C1,37	2	2
33					
34	581-555	DIODE, VARICAP, MV3103	CR1	1	1
35	581-567	DIODE, LED, MV5077C	DS1	1	1
36					

LM-1464633

AMPEX	Ampex Corporation REDWOOD CITY, CALIFORNIA	CODE IDENT NO. 92739	LIST OF MATERIALS	LM-1464633 SHEET 2 OF 4	REV C

ITEM NO.	PART NUMBER	DESCRIPTION		REF DESIG	QTY REQD PER DASH NUMBER -01	-02
37	068-209	INDUCTOR, VAR., .15uH		L1	1	1
38						
39	000-059	INTEGRATED CIRCUIT, MC1690P	1	6E	1	1
40	000-152	10125		2H	1	1
41	001-073	10101		1A,B,C,D,E,F,G, 2D,E	9	9
42	001-076	10174		5F	1	1
43	001-077	10176		3C	1	1
44	001-091	74S112		4B	1	1
45	587-146	10107		5D	1	1
46	587-550	10136		6D	1	1
47	587-552	12040		2G	1	1
48	587-626	74S02		7G	1	1
49	589-504	10109		4C,D,E	3	3
50	589-823	74LS138		1L,8L,5P	3	3
51	589-831	74LS175		1M,6P,7R	3	3
52	589-837	74S00		6H	1	1
53	589-838	74S04		1J,3H,J	3	3
54	589-839	74S08		2L,3M,4K,P	4	4
55	589-846	74S74		2M,4H,N,7F	4	4
56	589-850	74S163		3N,P,R,6K,L,M	6	6
57	589-920	10231		5E	1	1
58	589-933	74LS161		7H,J,K,L	4	4
59	589-935	74LS393		6G,J,N	3	3
60	590-252	10216		2C,F,4F	3	3
61	590-326	10131		3D,E	2	2
62	590-333	74LS163		2N,P,R	3	3
63	590-335	74LS273		4G,J	2	2
64	590-543	10116		1H	1	1
65	590-564	10124		6F	1	1
66	590-584	74LS244		8J,K	2	2
67	590-611	741TC		3G	1	1
68	590-622	74LS670		1N,P,R	3	3
69	590-844	74S151		7P	1	1
70	590-845	74S32		3K	1	1
71	590-855	74S374		4L,M	2	2
72	590-868	74S244		1K,3B,L	3	3
73	590-945	INTEGRATED CIRCUIT, 74F157		2J,K	2	2
74						
75						
76						
77	039-163	NETWORK, RESISTOR, 470 OHMS, 10 PIN SIP		U6,8,9,10	4	4
78	039-222	NETWORK, RESISTOR, 1.5K OHMS, 10 PIN SIP		U1-5,7,11,12	8	8
79						
80	066-665	RESISTOR, C.F., 1K OHMS, 1/4W, ±5%		R30,32	2	2
81	066-689	RESISTOR, C.F., 2.2K OHMS, 1/4W, ±5%		R2,3	2	2

LM-1464633

AMPEX	Ampex Corporation REDWOOD CITY, CALIFORNIA	CODE IDENT NO. 92739	LIST OF MATERIALS	LM- 1464633 SHEET 3 OF 4	REV C

ITEM NO.	PART NUMBER	DESCRIPTION	REF DESIG	QTY REQD PER DASH NUMBER -01	-02
82	066-712	RESISTOR, C.F., 22K OHMS, 1/4W, ±5%	R20,31,33,34	4	4
83	066-717	47K	R4	1	1
84	066-718	5.6K	R5	1	1
85	066-811	51	R23,24,35,36,39, 40	6	6
86	066-812	100	R1,21,29,42	4	4
87	066-818	470	R6,7,28,44	4	4
88	066-835	82	R9,11,16,18,25,26, 27,43	8	8
89	066-837	130	R10,12,13,14,15, 17,19,38	8	8
90	066-838	330	R22,37,41	3	3
91	076-028	RESISTOR, C.F., 5.1 OHMS, 1/4W, ±5%	R8	1	1
92					
93					
94					
95	014-780	TRANSISTOR, NPN, MPS6514-5	Q1	1	1
96					
97	143-981	CONN., SIGNAL CKT., P.C. TIP	REF: J1-A,B,C J2-A,B,C	6	6
98					
99	582-280	I.C., MTG. HDW., SOCKET, 24 PIN	REF:5G,J,K,M	4	4
100	582-281	28 PIN	REF:7M	1	1
101	582-329	8 PIN	REF:3G	1	1
102	582-330	14 PIN	REF: 1J,2G,L,M,3H,J,K, 3M,4H,K,N,P,6G,H, 6J,N,7F,G	18	18
103	582-331	16 PIN	REF: 1A,B,C,D,E,F,G,H,L,M, 1N,P,R,2C,D,E,F,H,J, 2K,N,P,R,3C,D,E,N,P, 3R,4B,C,D,E,F,5D,E,F, 5P,6D,E,F,K,L,M,P,7H, 7J,K,L,P,R,8L	52	52
104	582-333	I.C., MTG. HDW., SOCKET, 20 PIN	REF: 1K,3B,L,4G,J,L,M, 5N,8J,K	10	10
105					
106					
107	471-060	SCREW, PAN HD., X-REC, #4-40 X .250 LG		6	6
108					
109	493-005	NUT, HEX, NYLON LOCK, #4-40		6	6
110					
111	530-477	ENCLOSURE PART, CARD INSERTER/EXTRACTOR		2	2
112					
113	602-044	SHORTING PLUG, RED	J1,2	2	2

NOTES:

1. STATIC SENSITIVE DEVICE, SPECIAL HANDLING REQUIRED PER AMPEX STD HE1-1.

LM-1464633

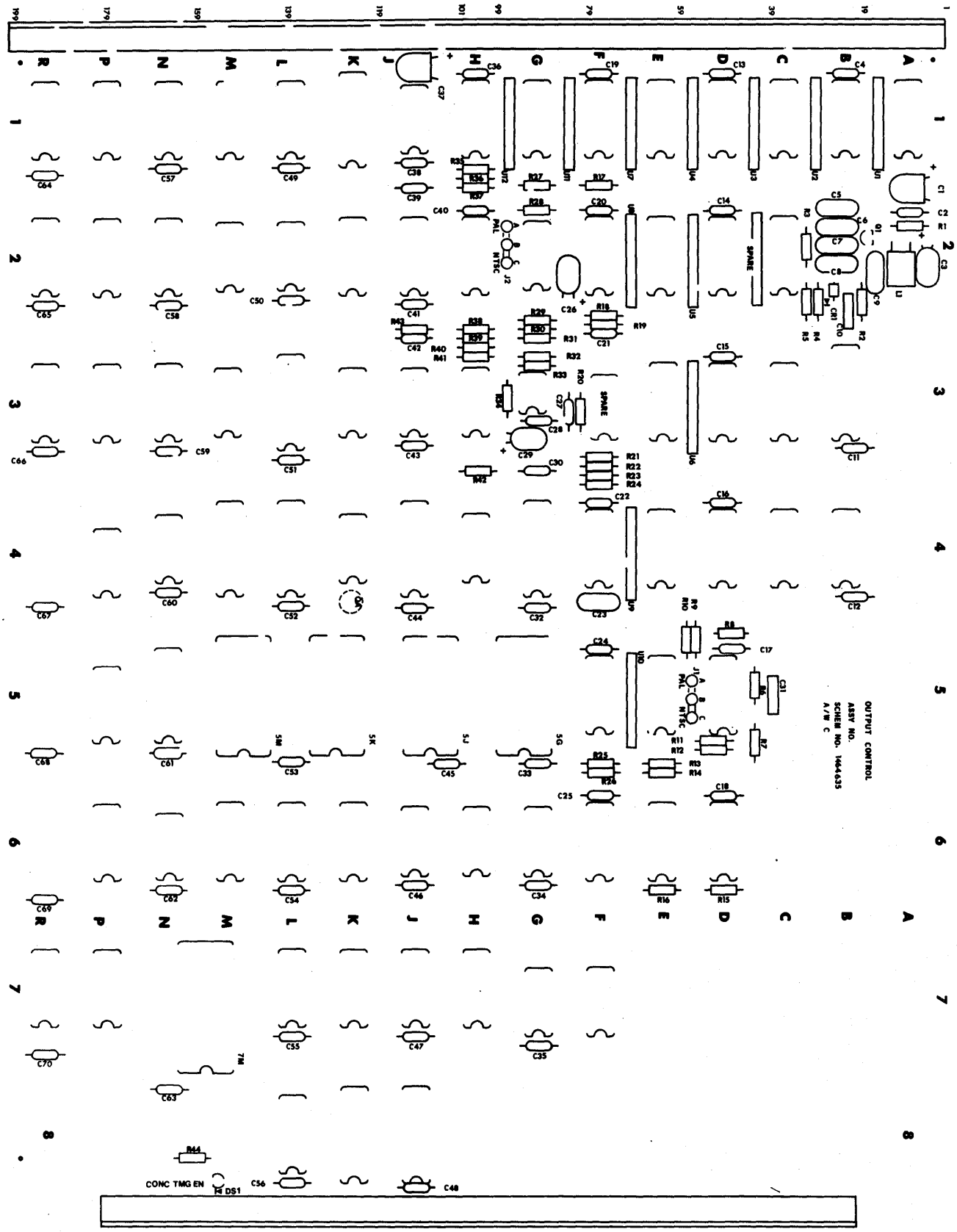

Assembly No. 1464633-02B. Output Control PWA, A15, NTSC

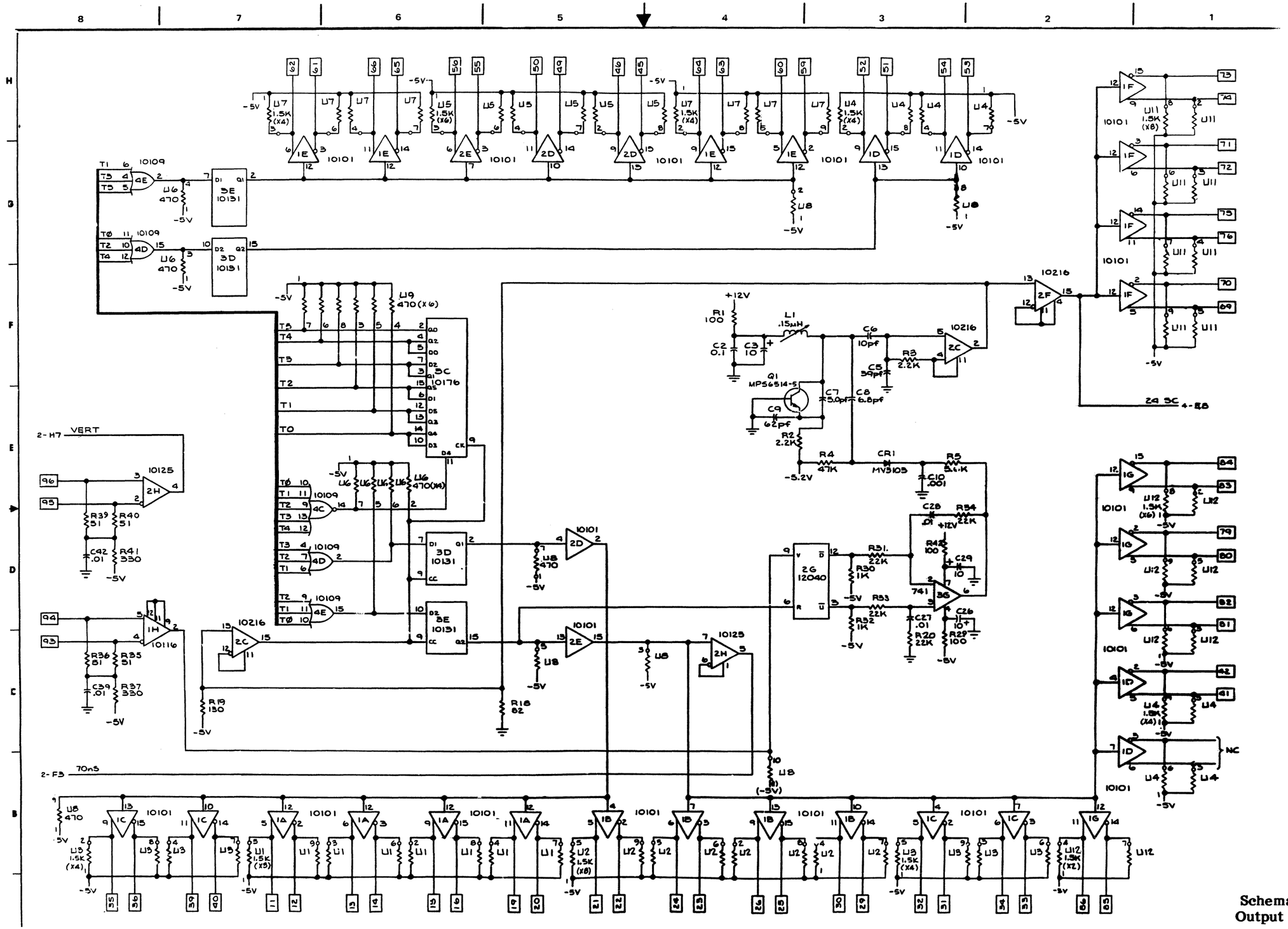

Schematic No. 1464635B.
Output Control PWA, A15
(Sheet 3 of 5)

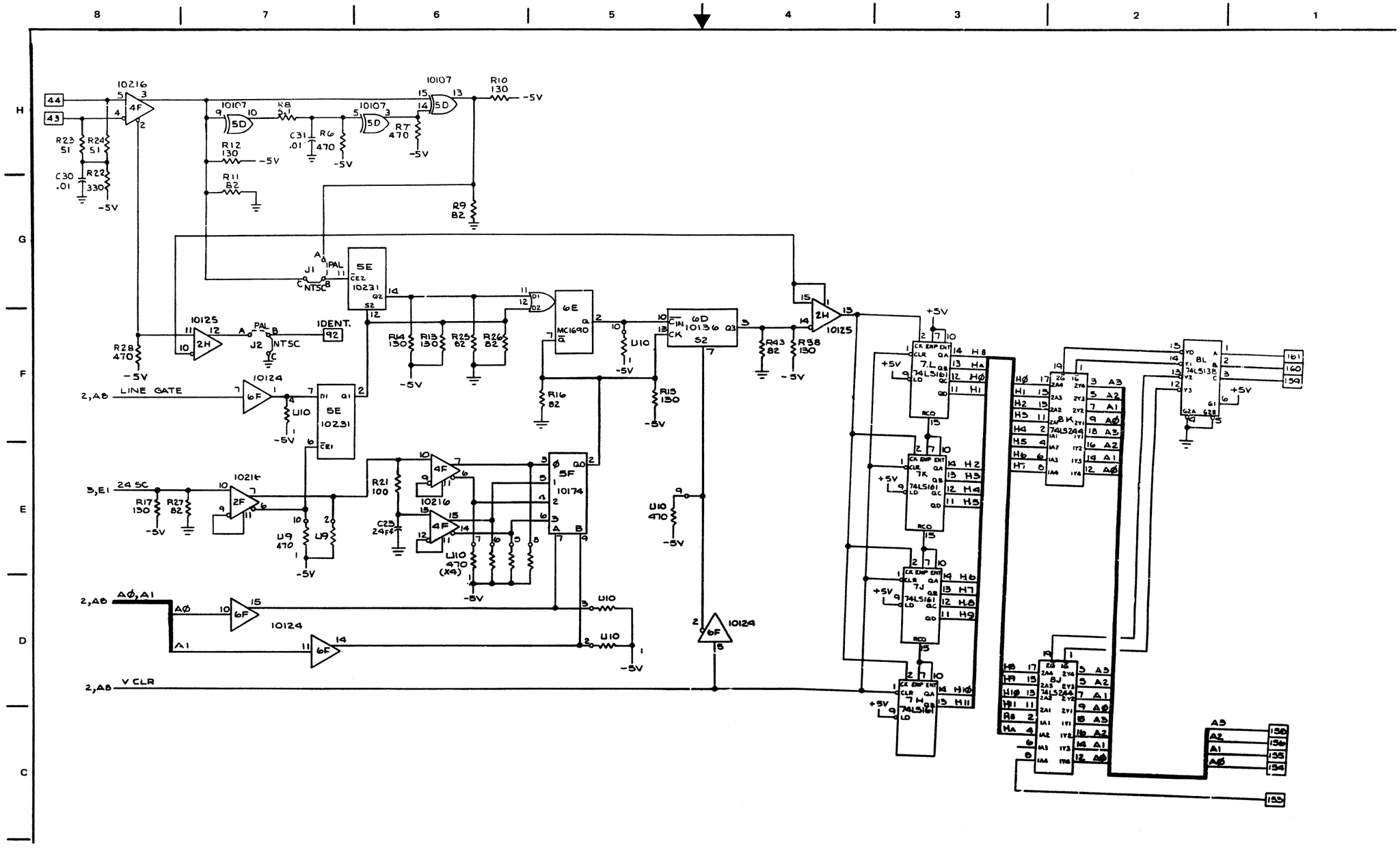

Schematic No. 1464635B.
Output Control PWA, A15
(Sheet 4 of 5)

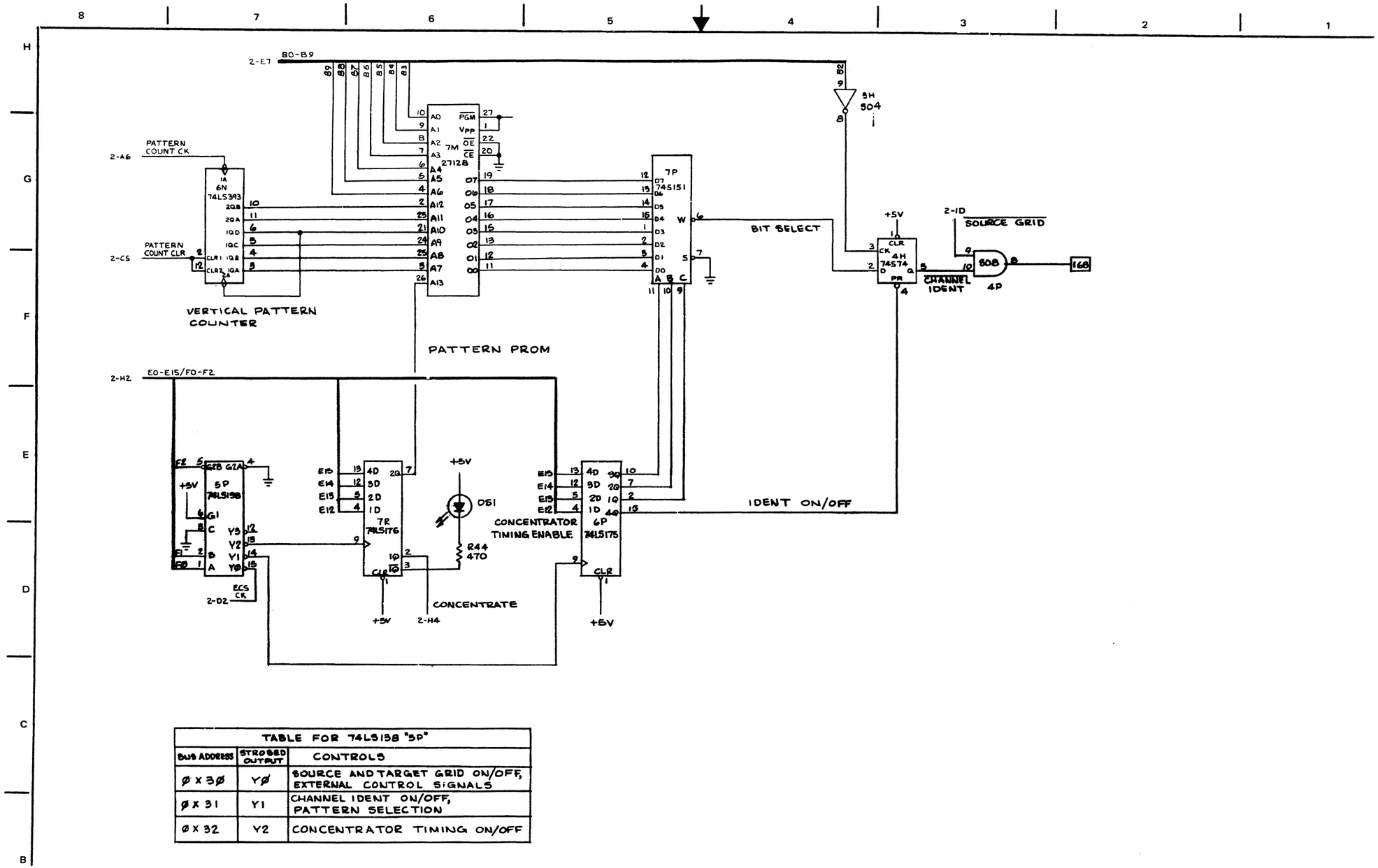

TABLE FOR 74LS138 "5P"		
BUS ADDRESS	STROBED OUTPUT	CONTROLS
Ø X 3Ø	YØ	SOURCE AND TARGET GRID ON/OFF, EXTERNAL CONTROL SIGNALS
Ø X 31	Y1	CHANNEL IDENT ON/OFF, PATTERN SELECTION
Ø X 32	Y2	CONCENTRATOR TIMING ON/OFF

Schematic No. 1464635B.
Output Control PWA, A15
(Sheet 5 of 5)

ITEM NO.	PART NUMBER	DESCRIPTION	REF DESIG	QTY REQD PER DASH NUMBER -01	-02
1					
2					
3	1464635	SCHEMATIC		(-01)	(D)
4					
5	1409670-BE	LABEL, EXTRACTOR ARM, PWA		1	1
6	1409976-AA	INSULATOR, STIFFENER		1	1
7	1409976-AB	INSULATOR, STIFFENER		1	1
8	1409997-AA	STIFFENER, PWB		1	1
9	1409997-AB	STIFFENER, PWB		1	1
10					
11	1465045-01	PROM ASSEMBLY, 87S181 (1)	5G	1	1
12	1465048-01	PROM ASSEMBLY, 87S181 (1)	5J	1	1
13	1465039-01	PROM ASSEMBLY, PAL16R4	5N	1	1
14	1465040-01	PROM ASSEMBLY, 27128 (1)	7M	1	1
15	1465058-01	PROM ASSEMBLY, AM27S191	5K	1	1
16	1465059-01	PROM ASSEMBLY, 87S181 (1)	5M	1	1
17	064-652	CAPACITOR, CER., .01uF, 50V, ±20%	C27,28,30,39,42	5	5
18	064-653	CAPACITOR, CER., .1uF, 50V, ±20%	C2,4,11-22,24,25, 32-36,38,40,41, 43-70	52	52
19					
20	034-156	CAPACITOR, MICA, 5pF, 500V, ±.5pF	C7	1	1
21	034-180	39pF, 500V, ±5%	C5	1	1
22	034-183	62pF, 500V, ±5%	C9	1	1
23	034-207	24pF, 500V, ±5%	C23	1	1
24	034-215	10pF, 500V, ±.5pF	C6	1	1
25	056-022	CAPACITOR, MICA, 6.8pF, 500V, ±.5pF	C8	1	1
26					
27					
28	035-734	CAPACITOR, MYLAR, .01uF, 50V, 5%	C31	1	1
29	055-166	CAPACITOR, MYLAR, .001uF, 50V, 5%	C10	1	1
30					
31	037-812	CAPACITOR, TANT., 10uF, 25V, ±20%	C3,26,29	3	3
32	037-965	CAPACITOR, TANT., 120uF, 10V, ±20%	C1,37	2	2
33					
34	581-555	DIODE, VARICAP, MV3103	CR1	1	1
35	581-567	DIODE, LED, MV5077C	DS1	1	1
36					

LIT. 1404014

AMPEX	Ampex Corporation REDWOOD CITY, CALIFORNIA	CODE IDENT NO 92739	LIST OF MATERIALS	LM- 1464614 SHEET 2 OF 4	REV C

ITEM NO.	PART NUMBER	DESCRIPTION	REF DESIG	QTY REQD PER DASH NUMBER -01	-02
37	068-209	INDUCTOR, VAR., .15uH	L1	1	1
38					
39	000-059	INTEGRATED CIRCUIT, MC1690P 1	6E	1	1
40	000-152	10125	2H	1	1
41	001-073	10101	1A,B,C,D,E,F,G, 2D,E	9	9
42	001-076	10174	5F	1	1
43	001-077	10176	3C	1	1
44	001-091	74S112	4B	1	1
45	587-146	10107	5D	1	1
46	587-550	10136	6D	1	1
47	587-552	12040	2G	1	1
48	587-626	74S02	7G	1	1
49	589-504	10109	4C,D,E	3	3
50	589-823	74LS138	1L,8L,5P	3	3
51	589-831	74LS175	1M,6P,7R	3	3
52	589-837	74S00	6H	1	1
53	589-838	74S04	1J,3H,J	3	3
54	589-839	74S08	2L,3M,4K,P	4	4
55	589-846	74S74	2M,4H,N,7F	4	4
56	589-850	74S163	3N,P,R,6K,L,M	6	6
57	589-920	10231	5E	1	1
58	589-933	74LS161	7H,J,K,L	4	4
59	589-935	74LS393	6G,J,N	3	3
60	590-252	10216	2C,F,4F	3	3
61	590-326	10131	3D,E	2	2
62	590-333	74LS163	2N,P,R	3	3
63	590-335	74LS273	4G,J	2	2
64	590-543	10116	1H	1	1
65	590-564	10124	6F	1	1
66	590-584	74LS244	8J,K	2	2
67	590-611	74:TC	3G	1	1
68	590-622	74LS670	1N,P,R	3	3
69	590-844	74S151	7P	1	1
70	590-845	74S32	3K	1	1
71	590-855	74S374	4L,M	2	2
72	590-868	74S244	1K,3B,L	3	3
73	590-945	INTEGRATED CIRCUIT, 74F157	2J,K	2	2
74					
75					
76					
77	039-163	NETWORK, RESISTOR, 470 OHMS, 10 PIN SIP	U6,8,9,10	4	4
78	039-222	NETWORK, RESISTOR, 1.5K OHMS, 10 PIN SIP	U1-5,7,11,12	8	8
79					
80	066-665	RESISTOR, C.F., 1K OHMS, 1/4W, ±5%	R30,32	2	2
81	066-689	RESISTOR, C.F., 2.2K OHMS, 1/4W, ±5%	R2,3	2	2

LM-1464614

AMPEX	Ampex Corporation REDWOOD CITY, CALIFORNIA	CODE IDENT NO 92739	LIST OF MATERIALS	LM- 1464614 SHEET 3 OF 4	REV C

ITEM NO.	PART NUMBER	DESCRIPTION	REF DESIG	QTY REQD PER DASH NUMBER -01	-02
82	066-712	RESISTOR, C.F., 22K OHMS, 1/4W, ±5%	R20,31,33,34	4	4
83	066-717	47K	R4	1	1
84	066-718	5.6K	R5	1	1
85	066-811	51	R23,24,35,36,39, 40	6	6
86	066-812	100	R1,21,29,42	4	4
87	066-818	470	R6,7,28,44	4	4
88	066-835	82	R9,11,16,18,25,26, 27,43	8	8
89	066-837	130	R10,12,13,14,15, 17,19,38	8	8
90	066-838	330	R22,37,41	3	3
91	076-028	RESISTOR, C.F., 5.1 OHMS, 1/4W, ±5%	R8	1	1
92					
93					
94					
95	014-780	TRANSISTOR, NPN, MPS6514-5	Q1	1	1
96					
97	143-981	CONN., SIGNAL CKT., P.C. TIP	REF: J1-A,B,C J2-A,B,C	6	6
98					
99	582-280	I.C., MTG. HDW., SOCKET, 24 PIN	REF:5G,J,K,M	4	4
100	582-281	28 PIN	REF:7M	1	1
101	582-329	8 PIN	REF:3G	1	1
102	582-330	14 PIN	REF: 1J,2G,L,M,3H,J,K, 3M,4H,K,N,P,6G,H, 6J,N,7F,G	18	18
103	582-331	16 PIN	REF: 1A,B,C,D,E,F,G,H,L,M, 1N,P,R,2C,D,E,F,H,J, 2K,N,P,R,3C,D,E,N,P, 3R,4B,C,D,E,F,5D,E,F, 5P,6D,E,F,K,L,M,P,7H, 7J,K,L,P,R,8L	52	52
104	582-333	I.C., MTG. HDW., SOCKET, 20 PIN	REF: 1K,3B,L,4G,J,L,M, 5N,8J,K	10	10
105					
106					
107	471-060	SCREW, PAN HD., X-REC, #4-40 X .250 LG		6	6
108					
109	493-005	NUT, HEX, NYLON LOCK, #4-40		6	6
110					
111	530-477	ENCLOSURE PART, CARD INSERTER/EXTRACTOR		2	2
112					
113	602-044	SHORTING PLUG, RED	J1,2	2	2

NOTES:

1. STATIC SENSITIVE DEVICE, SPECIAL HANDLING REQUIRED PER AMPEX STD HE1-1.

Assembly No. 1464614-02C. Output Control PWA, A15, PAL

ITEM NO.	PART NUMBER	DESCRIPTION	REF DESIG	QTY REQD PER DASH NUMBER -03	-04	-05
1				-02	-02	
2						
3	1420034	SCHEMATIC		K	M	-
4	1464303	SCHEMATIC				C
5						
6	1409670-BF	LABEL, EXTRACTOR ARM, PWA		1	1	1
7	1409976-AA	INSULATOR, STIFFENER			1	1
8	1409976-AB	INSULATOR, STIFFENER		1	1	1
9	1409997-AB	STIFFENER, PWB		1	1	1
10	1409997-AA	STIFFENER, PWB			1	1
11	1420345-01	PROM ASSY 1 REF: INTEL 2716	8L	1	1	1
12	1420346-01	1 REF: TBP14S10	8N	1	1	1
13	1420347-01	REF: TBP18S030	2F	1	1	1
14	1420348-01	REF: TBP18S22	5H	1	-	-
15	1420349-01	REF: TBP18S22	8J	1	1	1
16	1420350-01	REF: TBP28S42	6D	1	1	-
17	1420351-01	REF: TBP28S42	6E	1	1	-
18	1420348-02	REF: TBP28L22	5H	-	1	1
19	1420352-02	REF: TBP28S42	7P	1	1	-
20	1420353-01	PROM ASSY REF: TBP28S42	8D	1	1	-
21						
22						
23	064-652	CAPACITOR, CER., .01uF, 50V, ±20%	C1,20	2	2	2
24	064-653	CAPACITOR, CER., .1uF, 50V, ±20%	C2-9,11-19,21-34 36-68	64	64	64
25						
26	037-965	CAPACITOR, TANT., 120uF, 10V, ±20%	C10,35	2	2	2
27						
28	000-128	INTEGRATED CIRCUIT, 74S283	3H,4J,6K,7K,8K	5	5	5
29	001-091	74S112	3A	1	1	1
30	589-823	74LS138	1L,1M,2L,2M	4	4	4
31	589-824	74LS153	3N	1	1	1
32	589-831	74LS175	6P	1	1	1
33	589-837	74S00	2A,2E,5L,5M	4	4	4
34	589-838	74S04	8C	1	1	1
35	589-846	74S74	3B,3L,6A,7A,	4	4	4
36	589-847	74S86	7B,8A	2	2	2
37	589-850	INTEGRATED CIRCUIT, 74S163	3C,D,E,M,4M,5N, 5P,6C,N,7D	10	10	10

LM-1420032

AMPEX	Ampex Corporation REDWOOD CITY, CALIFORNIA	CODE IDENT NO. 92739	LIST OF MATERIALS	LM-1420032 SHEET 2	S

ITEM NO.	PART NUMBER	DESCRIPTION	REF DESIG	QTY REQD PER DASH NUMBER -03	-04	-05
38	589-935	INTEGRATED CIRCUIT, 74LS393	4L,6L	2	2	2
39	589-937	74S174	6B	1	1	1
40	589-938	74S175	6M	1	1	1
41	590-335	74LS273	4A,B,N,P,5A,B	6	6	6
42	590-443	74S02	7C	1	1	1
43	000-152	10125	1A	1	1	1
44	590-564	10124	1J,1K,2J,2K,3K	5	5	5
45	590-586	74LS374	1G,H,2B,G,H,5F	6	6	6
46	590-615	74LS139	3P	1	1	1
47	590-622	74LS670	1N,1P,2N,2P	4	4	4
48	590-843	74S85	4C,D,E,5C,D,E	6	6	6
49	590-845	74S32	1B,8B	2	2	2
50	590-855	74S374	1C,D,F,2C,D,3J, 4H,K,5G,J,K,6F, J,7E,F,J,N,8E,F, G,H,P	22	22	22
51	590-868	74S244	1E	1	1	1
52	590-987	INTEGRATED CIRCUIT, MPY8HJ-1	4F,7G	2	2	2
53						
54						
55	066-665	RESISTOR, C.F., 1K OHMS, 1/4W, 5%	R4,6			2
56	066-665	RESISTOR, C.F., 1K OHMS, 1/4W, 5%	R4	1	1	-
57	066-811	RESISTOR, C.F., 51 OHMS, 1/4W, 5%	R2,3	2	2	2
58	066-838	RESISTOR, C.F., 330 OHMS, 1/4W, 5%	R1,5	2	2	2
59						
60	135-024	HEADER ASSY, RIGHT ANGLE, 20 POSITION	J1	1	1	1
61	1465080-01	PROM ASSY, REF: TBP28S42	6D			1
62	1465081-01	PROM ASSY, REF: TBP28S42	6E			1
63	1465082-01	PROM ASSY, REF: TBP28S42	7P			1
64	1465083-01	PROM ASSY, REF: TBP28S42	8D			1
65						
66	582-280	I.C., MTG HDW, SOCKET, 24 PIN	REF:8L	1	1	1
67	582-282	40 PIN	REF:4F,7G	2	2	2
68	582-330	14 PIN	REF:1B,2A,E,3B,L,4L,5L,5M, 6A,L,7A,B,C,8A,B,C	16	16	16
69	582-331	16 PIN	REF:1A,J,K,L,M,N,P,2F,J,K, 2L,M,N,P,3A,C,D,E,H,K,M,N,P, 4C,D,E,J,M,5C,D,E,N,P, 6B,C,K,M,N,P,7D,K,8K,N	43	43	43
70	582-333	I.C., MTG HDW, SOCKET, 20 PIN	REF:1C,D,E,F,G,H,2B,C,D,G, 2H,3J,4A,B,H,K,N,P,5A, B,F,G,H,J,K,6D,E,F,J, 7E,F,J,N,P,8D,E,F,G,H, J,P	41	41	41
71	471-060	SCREW, PAN HD, X-REC, 4-40 X .250 LG		3	6	6
72	493-005	NUT, HEX, NYLON LOCK, 4-40		3	6	6
73	530-477	ENCLOSURE PART, CARD INSERTER/EXTRACTOR		2	2	2

NOTES:

1 STATIC SENSITIVE DEVICE. SPECIAL HANDLING REQUIRED PER AMPEX STD HE1-1.

LM-1420032

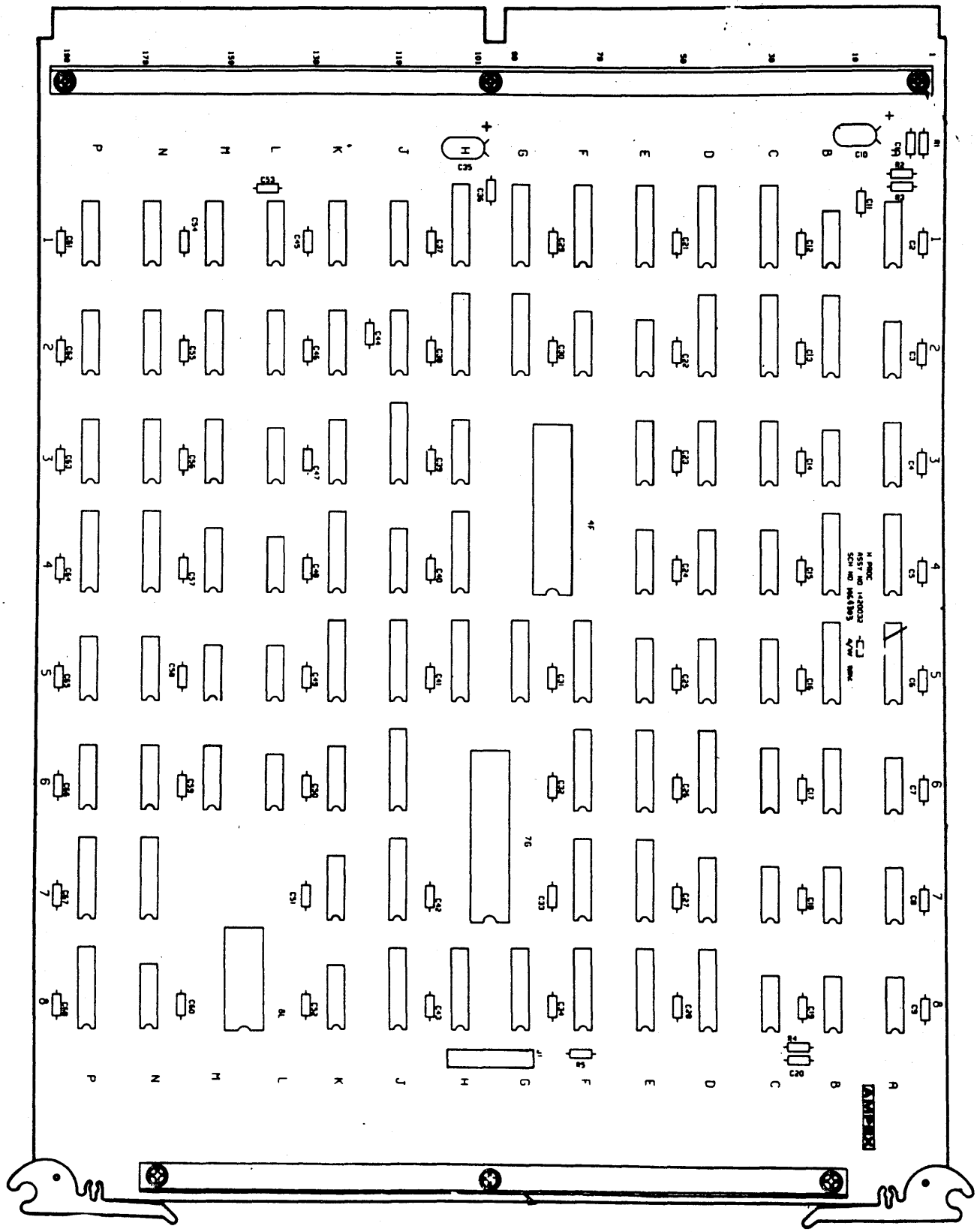

Assembly No. 1420032-05S. Horizontal Processor PWA, A22, NTSC

NOTES: UNLESS OTHERWISE SPECIFIED

1. RESISTANCE VALUES ARE IN OHMS, ¼ W, 5%.
2. CAPACITANCE VALUES ARE IN MICROFARADS.

3 STATIC SENSITIVE DEVICE, SPECIAL HANDLING REQUIRED PER AMPEX STD HEI-1.

4 PROMS USED WITH NTSC PWA 1420032

5 PROMS USED WITH PAL PWA 1464301

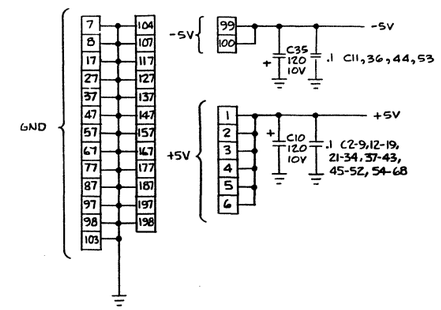

I.C. LIST		
REF DES.	7P 5	8L 5 3
AMPEX P/N	1465006-01	1464341-01
VENDOR P/N	TBP28S42	2532
VOLTAGE(PIN)	+5V (20)	+5V (24)
GND(PIN)	(10)	(12)

I.C. LIST																
REF DES	1C,1D,1F,2C,2D,3J,4H,4K,5G,5J,5K,6F,6J,7E,7F,7J,7N,8E,8F,8G,8H,8P	4L,6L	1N,1P,2N,2P	4F,7G	7P 4	6E	6D	8D	8N 3	2F	8J	4 8L 3	5H	6M	1G,1H,2B 2G,2H,5F
AMPEX P/N	590-855	589-935	590-622	590-987	1465082-01	1465081-01	1465080-01	1465083-01	1420346-01	1420347-01	1420349-01	1420345-01	1420348-02	589-938	590-586
VENDOR P/N	74S374	74LS393	74LS670	MPY8HJ-1	TBP28S42	TBP28S42	TBP28S42	TBP28S42	TBP14S10	TBP18S030	TBP18S22	2716	TBP28L22	74S175	74LS374
VOLTAGE (PIN)	+5V (20)	+5V (14)	+5V (16)	+5V (30)	+5V (20)	+5V (20)	+5V (20)	+5V (20)	+5V (16)	+5V (16)	+5V (20)	+5V (24)	+5V (20)	+5V (16)	+5V(20)
GND (PIN)	(10)	(7)	(8)	(32)	(10)	(10)	(10)	(10)	(8)	(8)	(10)	(12)	(10)	(8)	(10)

REF DES	
LAST USED	NOT USED
C68 R6 J1	

I.C. LIST																					
REF DES	2A,2E 5M,5L	8C	1J,1K,2J,2K,3K	1A	7C	1B,8B	3B,3L,6A 7A	4C,4D,4E,5C,5D,5E	7B,8A	3A		1L,1M,2L,2M	3P	3N	3C,3D,3E,3M,4M,5N,5P,6C,6N,7D	6B	6P	1E	4A,4B,4N,4P,5A,5B	3H,4J,6K,7K,8K
AMPEX P/N	589-837	589-838	590-564	000-152	590-443	590-845	589-846	590-843	589-847	001-091		589-823	590-615	589-824	589-850	589-937	589-831	590-868	590-335	000-128
VENDOR P/N	74S00	74S04	10124	10125	74S02	74S32	74S74	74S85	74S86	74S112		74LS138	74LS139	74LS153	74S163	74S174	74LS175	74S244	74LS273	74S283
VOLTAGE (PIN)	+5V (14)	+5V (14)	+5V (9) -5.2V (8)	+5V (9) -5.2V (8)	+5V (14)	+5V (14)	+5V (14)	+5V (16)	+5V (14)	+5V (16)		+5V (16)	+5V (16)	+5V (16)	+5V (16)	+5V (16)	+5V (16)	+5V (20)	+5V (20)	+5V (16)
GND (PIN)	(7)	(7)	(16)	(16)	(7)	(7)	(7)	(8)	(7)	(8)		(8)	(8)	(8)	(8)	(8)	(8)	(10)	(10)	(8)

Schematic No. 1464303C.
Horizontal Processor PWA, A22
(Sheet 1 of 4)

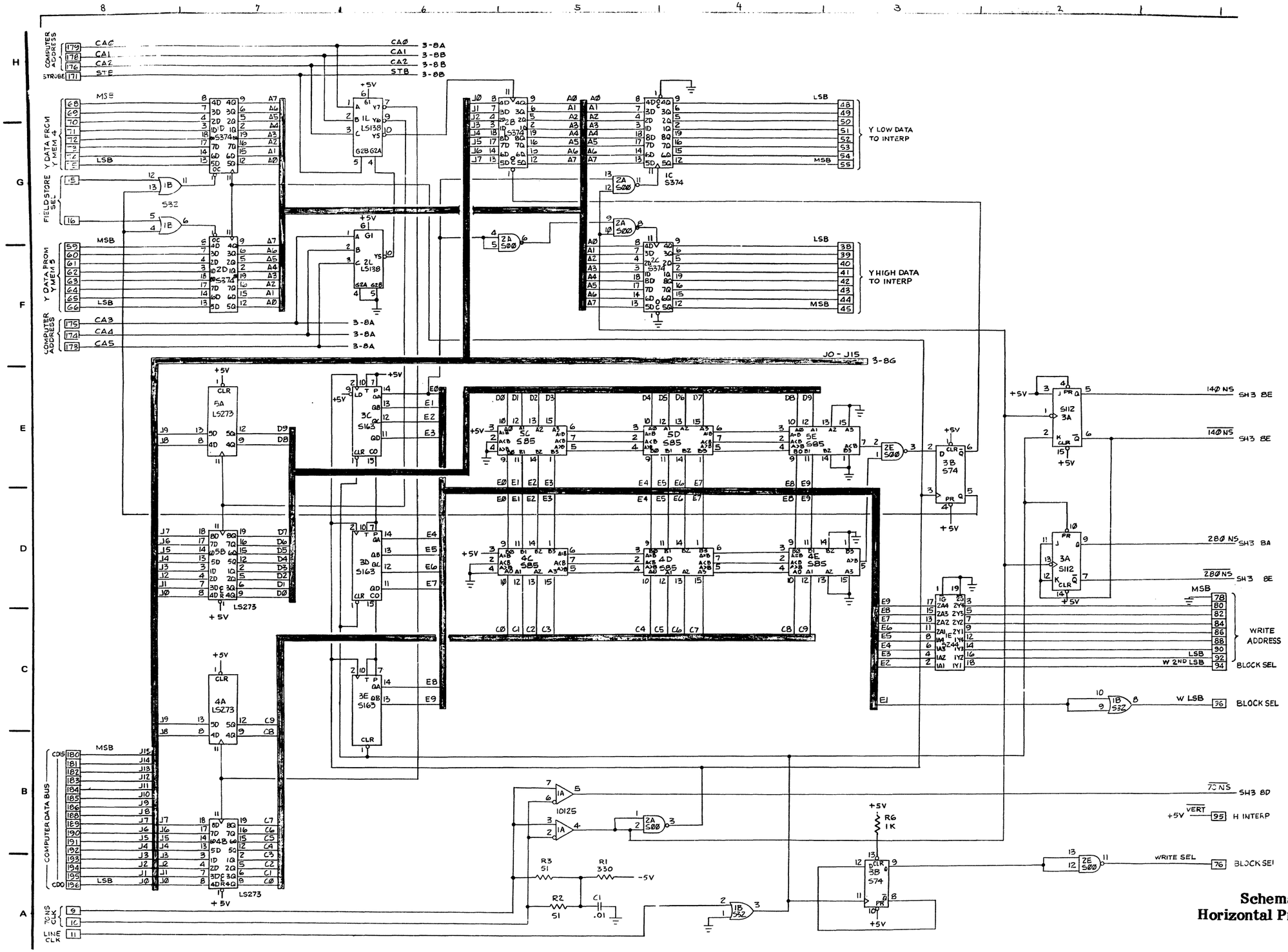

Schematic No. 1464303C.
Horizontal Processor PWA, A22
(Sheet 2 of 4)

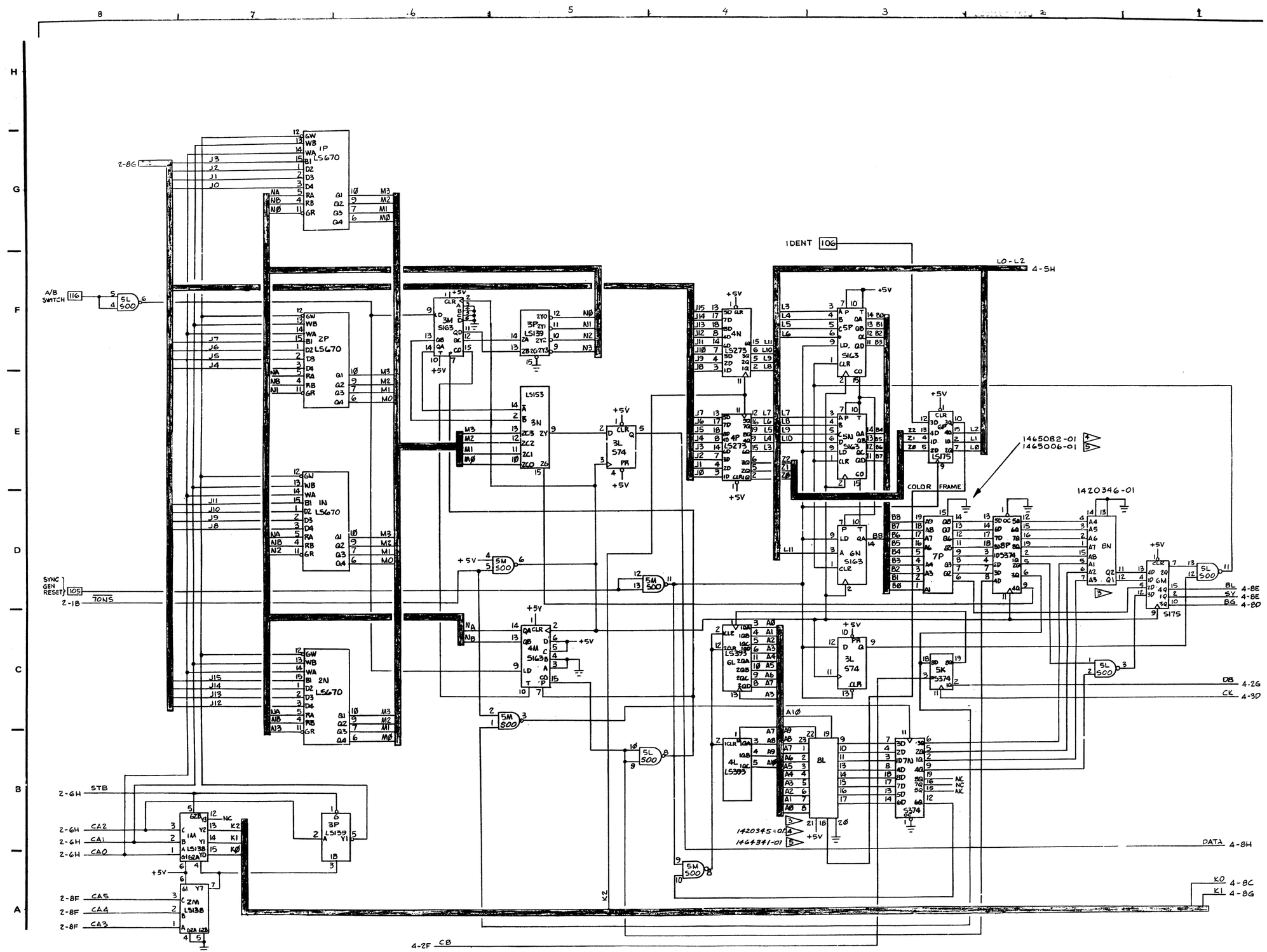

Schematic No. 1464303C.
Horizontal Processor PWA, A22
(Sheet 3 of 4)

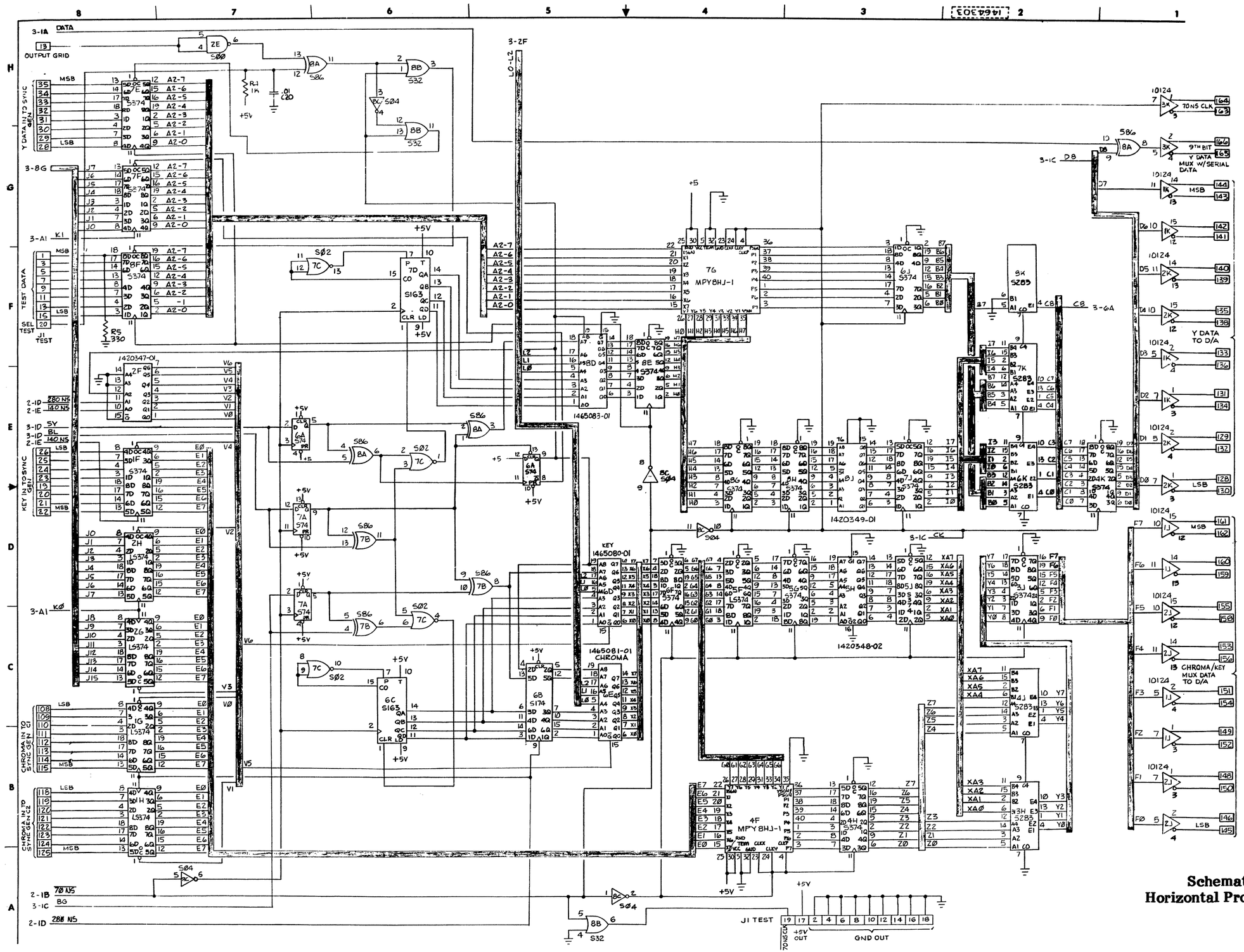

Schematic No. 1464303C.
Horizontal Processor PWA, A22
(Sheet 4 of 4)

ITEM NO.	PART NUMBER	DESCRIPTION	REF DESIG	QTY REQD PER DASH NUMBER -01	-02	-03
1				-01	-01	
2						
3	1464303	SCHEMATIC		A	B	C
4						
5	1409976-AA	INSULATOR, STIFFENER		1	1	1
6	1409670-BF	LABEL, EXTRACTOR ARM, PWA		1	1	1
7	1409976-AB	INSULATOR, STIFFENER		1	1	1
8	1409997-AB	STIFFENER, PWB		1	1	1
9	1409997-AA	STIFFENER, PWB		1	1	1
10	1420346-01	PROM ASSY 1 REF: TBP14S10	8N	1	1	1
11	1420347-01	REF: TBP18S030	2F	1	1	1
12	1420348-01	REF: TBP18S22	5H	1	1	-
13	1420349-01	REF: TBP18S22	8J	1	1	1
14	1420350-01	REF: TBP28S42	6D	1	-	-
15	1420351-01	REF: TBP28S42	6E	1	-	-
16	1420353-01	REF: TBP28S42	8D	1	-	-
17	1464340-01	REF: TBP28S42	7P	1	-	-
18	1464341-01	PROM ASSY 1 REF: TMS2532	8L	1	1	1
19	1464340-02	PROM ASSY REF: TBP28S42	7P		1	-
20	1420348-02	PROM ASSY, REF:TBP28L22	5H		-	1
21	064-652	CAPACITOR, CER., .01uF, 50V, ±20%	C1,20	2	2	2
22	064-653	CAPACITOR, CER., .1uF, 50V, ±20%	C2-9,11-19,21-34, 36-68	64	64	64
23						
24	037-965	CAPACITOR, TANT., 120uF, 10V, ±20%	C10,35	2	2	2
25						
26	000-128	INTEGRATED CIRCUIT, 74S283	3H,4J,6K,7K,8K	5	5	5
27	000-152	10125	1A	1	1	1
28	001-091	74S112	3A	1	1	1
29	589-823	74LS138	1L,M,2L,M	4	4	4
30	589-824	74LS153	3N	1	1	1
31	589-831	74LS175	6P	1	1	1
32	589-837	74S00	2A,E,5L,M	4	4	4
33	589-838	74S04	8C	1	1	1
34	589-846	74S74	3B,L,6A,7A	4	4	4
35	589-847	74S86	7B,8A	2	2	2
36	589-850	74S163	3C,D,E,M,4M,5N, 5P,6C,N,7D	10	10	10
37	589-935	INTEGRATED CIRCUIT, 74LS393	4L,6L	2	2	2

LM-1464301

AMPEX Ampex Corporation REDWOOD CITY, CALIFORNIA	CODE IDENT NO. 92739	LIST OF MATERIALS	LM- 1464301 SHEET 2 OF 2	REV G

ITEM NO.	PART NUMBER	DESCRIPTION	REF DESIG	QTY REQD PER DASH NUMBER -01	-02	-03
38	589-937	INTEGRATED CIRCUIT, 74S174	6B	1	1	1
39	589-938	74S175	6M	1	1	1
40	590-335	74LS273	4A,B,N,P,5A,B	6	6	6
41	590-443	74S02	7C	1	1	1
42	590-564	10124	1J,K,2J,K,3K	5	5	5
43	590-586	74LS374	1G,H,2B,G,H,5F	6	6	6
44	590-615	74LS139	3P	1	1	1
45	590-622	74LS670	1N,P,2N,P	4	4	4
46	590-843	74S85	4C,D,E,5C,D,E	6	6	6
47	590-845	74S32	1B,8B	2	2	2
48	590-855	74S374	1C,D,F,2C,D,3J, 4H,K,5G,J,K,6F, J,7E,F,J,N,8E,F, G,H,P	22	22	22
49	590-868	74S244	1E	1	1	1
50	590-987	INTEGRATED CIRCUIT, MPY8HJ-1	4F,7G	2	2	2
51						
52						
53						
54	066-665	RESISTOR, C.F., 1K OHMS, 1/4W, 5%	R4,6	2	2	2
55	066-811	RESISTOR, C.F., 51 OHMS, 1/4W, 5%	R2,3	2	2	2
56	066-838	RESISTOR, C.F., 330 OHMS, 1/4W, 5%	R1,5	2	2	2
57						
58	135-024	HEADER ASSY, RIGHT ANGLE, 20 POSITION	J1	1	1	1
59						
60	471-060	SCREW, PAN HD, X-REC, 4-40 X .250 LG		6	6	6
61	493-005	NUT, HEX, NYLON LOCK, 4-40		6	6	6
62	530-477	ENCLOSURE PART, CARD INSERTER/EXTRACTOR		2	2	2
63						
64	582-280	I.C., MTG HDW, SOCKET, 24 PIN	REF:8L	1	1	1
65	582-282	40 PIN	REF:4F,7G	2	2	2
66	582-330	14 PIN	REF:1B,2A,E,3B,L,4L,5L,5M, 6A,L,7A,B,C,8A,B,C	16	16	16
67	582-331	16 PIN	REF:1A,J,K,L,M,N,P,2F,J,K, 2L,M,N,P,3A,C,D,E,H,K,M,N,P, 4C,D,E,J,M,5C,D,E,N,P,6B, C,K,M,N,P,7D,K,8K,N	43	43	43
68	582-333	I.C., MTG HDW, SOCKET, 20 PIN	REF:1C,D,E,F,G,H,2B,C,D,G, 2H,3J,4A,B,H,K,N,P,5A, B,F,G,H,J,K,6D,E,F,J,7E,F, J,N,P,8D,E,F,G,H,J,P	41	41	41
69	1465080-01	PROM ASSY, REF: TBP28S42	6D		1	1
70	1465081-01	PROM ASSY, REF: TBP28S42	6E		1	1
71	1465083-01	PROM ASSY, REF: TBP28S42	8D		1	1
72	1465006-01	PROM ASSY, REF: TBP28S42	7P		1	1

NOTES:

1. STATIC SENSITIVE DEVICE, SPECIAL HANDLING REQUIRED PER AMPEX STD HE1-1.

LM-1464301

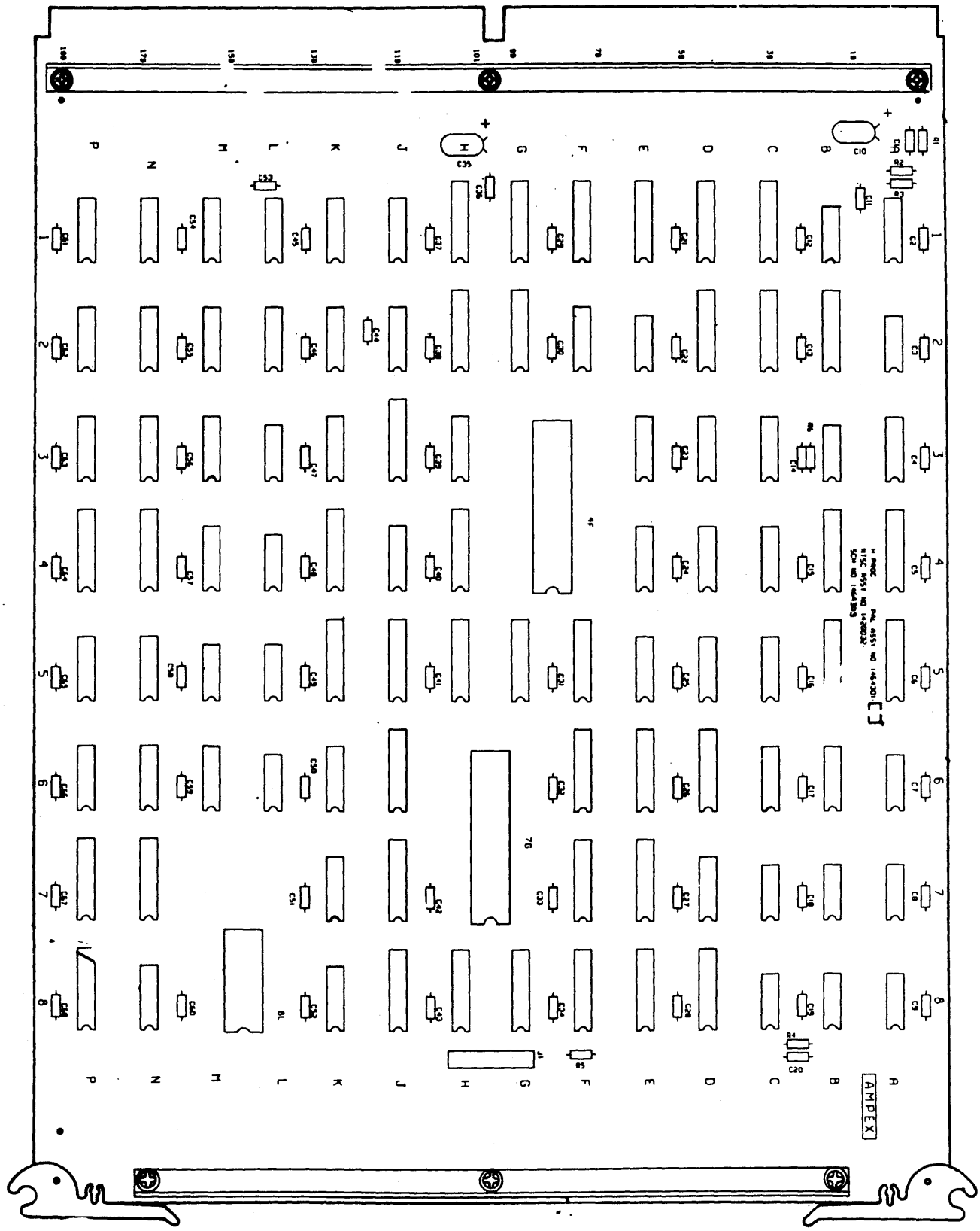

Assembly No. 1464301-03G. Horizontal Processor PWA, A22, PAL

ITEM NO.	PART NUMBER	D	DESCRIPTION	REF DESIG	QTY REQD PER DASH NUMBER -01	-02	-03	-04
1					-02	-03	-04	
2								
3	1464285		SCHEMATIC		(-)	(-)	A	A
4								
5	1409670-BG		LABEL, EXTRACTOR ARM, PWA		1	1	1	1
6	1409976-AA		INSULATOR, STIFFENER		1	1	1	1
7	1409976-AB		INSULATOR, STIFFENER		1	1	1	1
8	1409997-AA		STIFFENER, PWB		1	1	1	1
9	1409997-AB		STIFFENER, PWB		1	1	1	1
10								
11	1420327-01	1	PROM ASSEMBLY, LLC	6H	1	1	1	1
12	1420328-01	1	PROM ASSEMBLY, LLC	6L	1	1	1	1
13								
14	064-062		CAPACITOR, CER., .1uF, 100V, ±20%	87-89,96,97, C2-11,13-85	38	38	38	38
15	064-309		CAPACITOR, CER., .47uF, 100V, ±20%	C86	1	1	1	1
16								
17	034-253		CAPACITOR, MICA, 330pF, 500V, ±1%	C91	1	1	1	1
18	034-297		180pF, 500V, ±1%	C92	1	1	1	1
19	034-360		24pF, 500V, ±.5pF	C93	1	1	1	1
20	034-376		33pF, 500V, ±.5pF	C90	1	1	1	1
21	056-105		CAPACITOR, MICA, 18pF, 500V, ±.5pF	C94	1	1	1	1
22								
23	037-965		CAPACITOR, TANT, 120uF, 10V, ±20%	C1,95	2	2	2	2
24								
25	017-240		CRYSTAL, 31.9488 MHz	Y1	1	1	1	1
26								
27	581-567		DIODE, LED, MV5077B	DS1-16	16	16	6	6
28								
29	135-024		HEADER ASSEMBLY, RIGHT ANGLE, 20 PINS	J1	1	1	1	1
30								
31	068-212		INDUCTOR, VARIABLE, 1 uH, ±10%	L1	1	1	1	1
32								
33	000-005	1	IC, MSM2128-1AS	10A,T,11A,T	4	4	4	4
34	000-138		74LS195	2A,U	2	2	2	2
35	000-148		AM2966	5S	1	1	1	1
36	001-061		MC1489	3C,T	2	2	2	2
37	001-953		IC, MC1488	4C,T	2	2	2	2

LM-1464283

AMPEX	Ampex Corporation REDWOOD CITY, CALIFORNIA	CODE IDENT NO. 92739	LIST OF MATERIALS	LM-1464283 SHEET 2 OF 4	REV E

ITEM NO.	PART NUMBER	DESCRIPTION	REF DESIG	QTY REQD PER DASH NUMBER -01	-02	-03	-04
38	587-626	IC, 74S02	6J	1	1	1	1
39	589-850	74S163	3S,4S, 5H,L,7H,L	6	6	6	6
40	589-813	74LS00	5D,K,10J	3	3	3	3
41	589-814	74LS04	1D,7E,P,11K	4	4	4	4
42	589-816	74LS10	1C,11H,J	3	3	3	3
43	589-820	74LS74	1P	1	1	1	1
44	589-823	74LS138	1A,U,7F,G,M,N, 10H,K	8	8	8	8
45	589-837	74S00	2J	1	1	1	1
46	589-838	74S04	2S,4J,5F,R,6G,M	6	6	6	6
47	589-839	74S08	6E,K,P	3	3	3	3
48	589-846	74S74	5E,G,J,M,N,P	6	6	6	6
49	589-933	74LS161	1B,2B	2	2	2	2
50	590-328	74LS32	1N	1	1	1	1
51	590-335	74LS273	5A,T	2	2	2	2
52	590-584	74LS244	1F,H,J,K,L,M 3E,P	8	8	8	8
53	590-725	555V	1S	1	1	1	1
54	590-847	74LS245	1E,3D,N,R,4F, 4D,N,R	8	8	8	8
55	590-848	74S373	4E,G,M,P	4	4	4	4
56	590-854	74S240	9J,K	2	2	2	2
57	590-861	25LS14	6A,B,C,D,R,S,T,U, 7A,B,C,D,R,S,T,U	16	16	16	16
58	590-862	25LS15	6F,N	2	2	2	2
59	590-864	25LS22	8A,U	2	2	2	2
60	590-865	25LS23	8B,C,D,E,F,G,H,L, M,N,P,R,S,T,9A,B, C,D,E,F,G,H,L,M, N,P,R,S,T,U	30	30	30	30
61	590-866	AMZ8002DC [1]	4H,K	2	2	2	2
62	590-867	AM9551-4PC	4A,U	2	2	2	2
63	590-868	74S244	3J,5B,7J,K,8J,K	6	6	6	6
64	590-983	IC, TMM2016P [1]	1G,3F	2	2	2	2
65							
66							
67							
68	066-660	RESISTOR, C.F., 22 OHMS, 1/4W, ±5%	R26	1	1	1	1
69	066-663	220 OHMS, 1/4W, ±5%	R25,31	2	2	2	2
70	066-665	1K OHMS, 1/4W, ±5%	R5,8,11-14,27	7	7	7	7
71	066-668	4.7K OHMS, 1/4W, ±5%	R7,30	2	2	2	2
72	066-673	1 M OHMS, 1/4W, ±5%	R19,20	2	2	2	2
73	066-715	1.2K OHMS, 1/4W, ±5%	R24	1	1	1	1
74	066-814	270 OHMS, 1/4W, ±5%	R21	1	1	1	1
75	066-818	470 OHMS, 1/4W, ±5%	R18,22,23	3	3	3	3
76	066-842	5.1K OHMS, 1/4W, ±5%	R28	1	1	1	1
77	066-843	RESISTOR, C.F., 6.2K OHMS, 1/4W, ±5%	R29	1	1	1	1
78							
79							
80	039-164	RESISTOR, NETWORK, 4.7K OHMS	U3,6,	2	2	2	2
81	039-174	RESISTOR, NETWORK, 470 OHMS	U1,2,7,8	4	4	4	4

LM-1464283

AMPEX	Ampex Corporation REDWOOD CITY, CALIFORNIA	CODE IDENT NO. 92739	LIST OF MATERIALS	LM-1464283 SHEET 3 OF 4	REV E

ITEM NO.	PART NUMBER	DESCRIPTION	REF DESIG	QTY REQD PER DASH NUMBER -01	-02	-03	-04
82	039-264	RESISTOR, NETWORK, 4.7K OHMS	U4,5	2	2	2	2
83							
84	187-055	TERMINAL, WIREWRAP	E18,19	2	2	2	2
85							
86	014-780	TRANSISTOR, MPS6514-5	Q2-4	3	3	3	3
87	014-781	TRANSISTOR, MPS6518-5	Q1	1	1	1	1
88							
89	582-280	IC MTG HDW, SOCKET, 24 PIN	REF: 1G,3F,10A,C,D,F,G,L,N,P,S,T,11A,C,D,F,G,L,N,P,S,T	22	22	22	22
90	582-281	28 PIN	REF: 4A,U	2	2	2	2
91	582-282	40 PIN	REF: 4H,K	2	2	2	2
92	582-329	8 PIN	REF: 1S	1	1	1	1
93	582-330	14 PIN	REF: 1C,D,N,P,2J,S,3C,T,4C,J,T,5D,E,F,G,J,K,M,N,P,R,6E,G,J,K,M,P,7E,P,10J,11H,J,K	33	33	33	33
94	582-331	16 PIN	REF: 1A,B,U,2A,B,U,3S,4S,5H,L,6A,B,C,D,H,L,R,S,T,U,7A,B,C,D,F,G,H,L,M,N,R,S,T,U,10H,K	36	36	36	36
95	582-333	IC MTG HDW, SOCKET, 20 PIN	REF: 1E,F,H,J,K,L,M,3D,E,J,N,P,R,4D,E,F,G,M,N,P,R,5A,B,S,T,6F,N,7J,K,8A,B,C,D,E,F,G,H,J,K,L,M,N,P,R,S,T,U,9A,B,C,D,E,F,G,H,J,K,L,M,N,P,R,S,T,U	65	65	65	65
96							
97							
98	471-060	SCREW, PAN HD, X-REC, 4-40 X .250 LG		6	6	6	6
99	493-005	NUT, HEX, NYLON LOCK, 4-40		6	6	6	6
100	530-477	ENCLOSURE PART, CARD INSERT/EXTRACTOR		2	2	2	2
101							
102	600-036	SLEEVING, TEFLON, FLEXIBLE, .035 ID		AR	AR	AR	AR
103	615-004	WIRE, SOLID, UNINSULATED, 24 AWG		AR	AR	AR	AR

NOTES:

1. STATIC SENSITIVE DEVICE, SPECIAL HANDLING REQUIRED PER AMPEX STD HE1-1.

LM-1464283

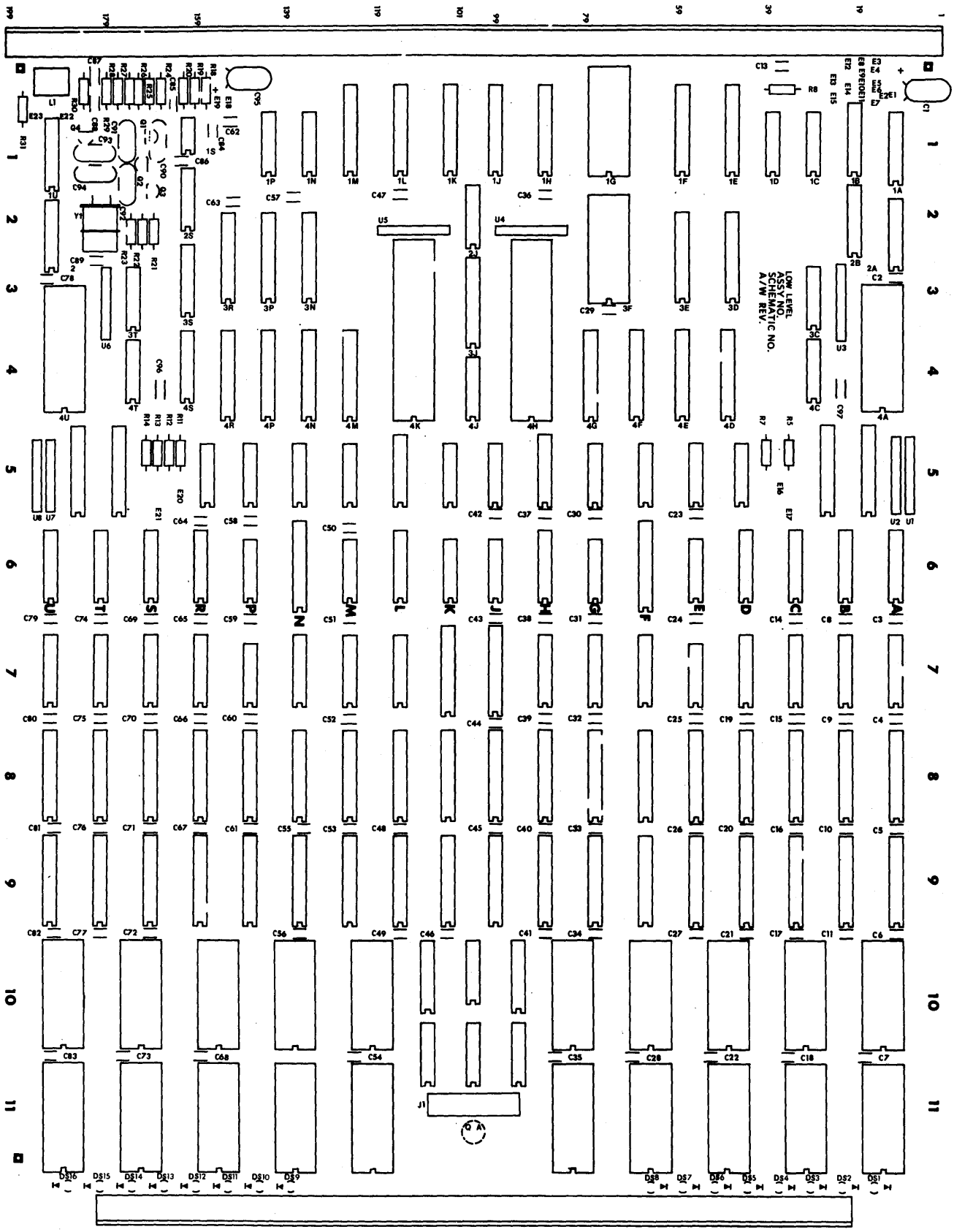

Assembly No. 1464283-04E. Low Level Controller PWA, A26

NOTES: UNLESS OTHERWISE SPECIFIED.

1. RESISTANCE VALUES ARE IN OHMS, 1/4W, 5%.
2. CAPACITANCE VALUES ARE IN MICROFARADS.
3. STATIC SENSITIVE DEVICE. SPECIAL HANDLING REQUIRED PER AMPEX STD HEI-1.
4. SELECT ONE.

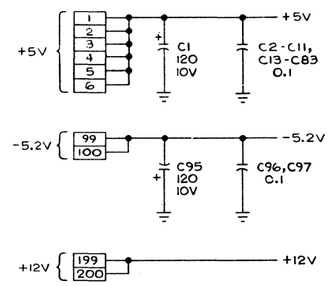

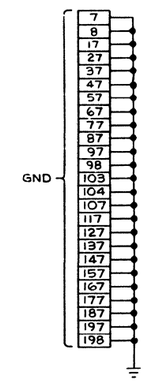

REF DES	
LAST USED	NOT USED
C97	C12
E27	E22-25
L1	
R31	R1-4, 9, 10,
Q4	R15-17
Y1	
D516	
	10C, 11C
	10B, 11B
U8	
J1	

	BASIC SIZE	ROTATION	PERSPECTIVE W/ ROTATION			
REFERENCE DESIGNATION	AMPEX P/N	AMPEX P/N	AMPEX P/N	VENDOR P/N	VOLTAGE (PIN)	GROUND (PIN)
10D,P [3]	1464466-01	1464456-01	1464480-01	TMS2532-45	+5V(21,24)	12
10F,N	1464467-01	1464457-01	1464481-01			
10G,L	1464468-01	1464458-01	1464482-01			
11D,P	1464469-01	1464459-01	1464483-01			
11F,N	1464470-01	1464460-01	1464484-01			
11G,L [3]	1464471-01	1464461-01	1464485-01	TMS2532-45	+5V(21,24)	12

I.C. LIST		
REF DES	6H [3]	6L [3]
AMPEX P/N	1420327-01	1420328-01
VENDOR P/N	14510	14510
VOLTAGE (PIN)	+5V (16)	+5V (16)
GND (PIN)	(8)	(8)

I.C. LIST (CONTINUED)																				
REF DES		5S	10A,T, 11A,T [3]	2J	2S,4J, 5F,R, 6G,M	5E,G,J, 5M,N,P	1A,U, 7F,G,M,N, 10H,K	1C, 11H,J	1S	1P	5D,K, 10J	1N	1D, 7E,P, 11K	6J	6E,K,P	1B,2B	3C,T	2A,U		
AMPEX P/N		000-148	000-005	589-837	589-838	589-846	589-823	589-816	590-725	589-820	589-813	590-328	589-814	587-626	589-839	589-933	587-856	000-138		
VENDOR P/N		2966	2128-1A5	74S00	74S04	74S74	74LS138	74LS10	555V	74LS74	74LS00	74LS32	74LS04	74S02	74S08	74LS161	1489	74LS195		
VOLTAGE (PIN)		+5V (20)	+5V (24)	+5V (14)	+5V (14)	+5V (14)	+5V (16)	+5V (14)	+5V (8)	+5V (14)	+5V (14)	+5V (14)	+5V (14)	+5V (14)	+5V (14)	+5V (16)	+5V (14)	+5V (16)		
GND (PIN)		(10)	(12)	(7)	(7)	(7)	(8)	(7)	(1)	(7)	(7)	(7)	(7)	(7)	(7)	(8)	(7)	(8)		

I.C. LIST (CONTINUED)																
REF DES	3S,4S, 5H,L, 7H,L	5A,T	1F,H,J, 1K,L,M, 3E,P	1E, 3D,N,R, 4D,F,N,R	4E,G,M,P	3J,5B, 7J,K, 8J,K	4C,T	6A,B,C,D, R,S,T,U, 7A,B,C,D, R,S,T,U	6F,N	8A,U	8B,C,D,E,F,G,H,L,M,N, 8P,R,S,T, 9A,B,C,D,E,F, 9G,H,L,M,N,P,R,S,T,U	4H,K [3]	4A,U	3F,1G [3]	9K,J
AMPEX P/N	589-850	590-335	590-584	590-847	590-848	590-868	590-108	590-861	590-862	590-864	590-865	590-866	590-867	590-983	590-854
VENDOR P/N	74S163	74LS273	74LS244	74LS245	74S373	74S244	1488	25LS14	25LS15	25LS22	25LS23	Z80020C	9551-4PC	2016P	74S240
VOLTAGE (PIN)	+5V (16)	+5V (20)	+5V (20)	+5V (20)	+5V (20)	+5V (20)	-5.2V(1) +12V(14)	+5V (16)	+5V(20)	+5V(20)	+5V(20)	+5V(10)	+5V(26)	+5V (24)	+5V (20)
GND (PIN)	(8)	(10)	(10)	(10)	(10)	(10)	(7)	(8)	(10)	(10)	(10)	(31)	(4)	(12)	(10)

Schematic No. 1464285A.
Low Level Controller PWA, A26
(Sheet 1 of 9)

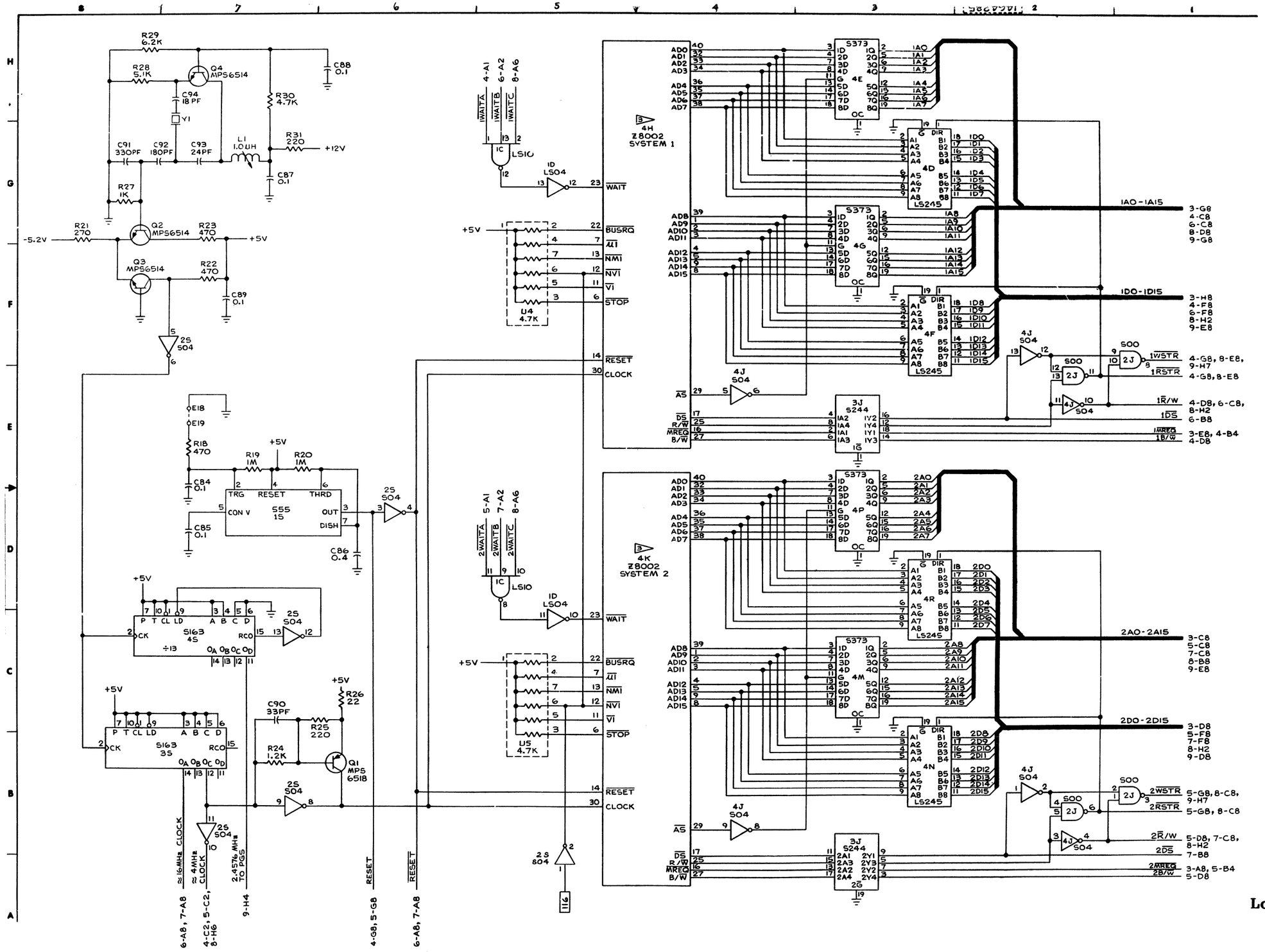

Schematic No. 1464285A.
Low Level Controller PWA, A26
(Sheet 2 of 9)

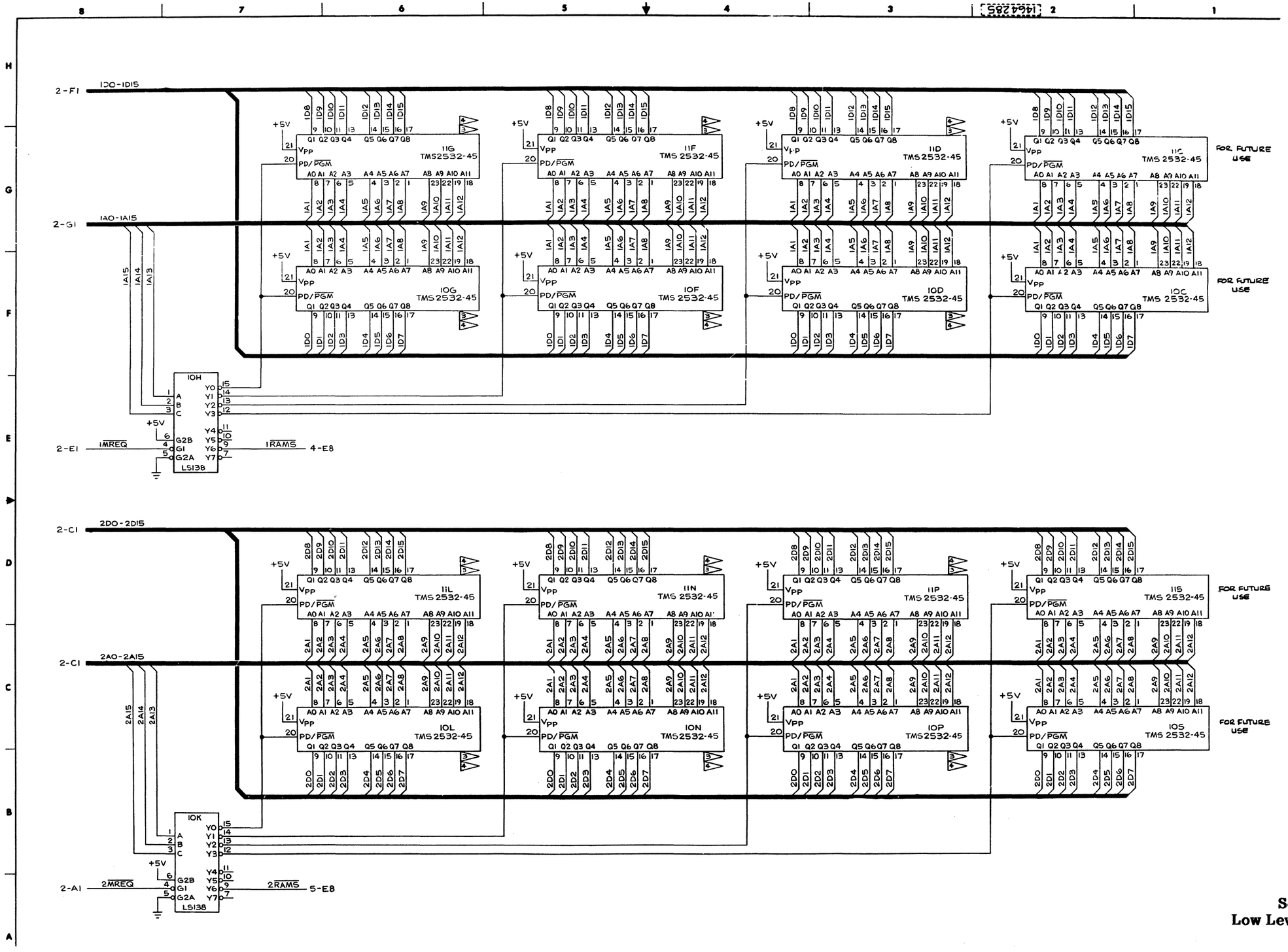

Schematic No. 1464285A.
Low Level Controller PWA, A26
(Sheet 3 of 9)

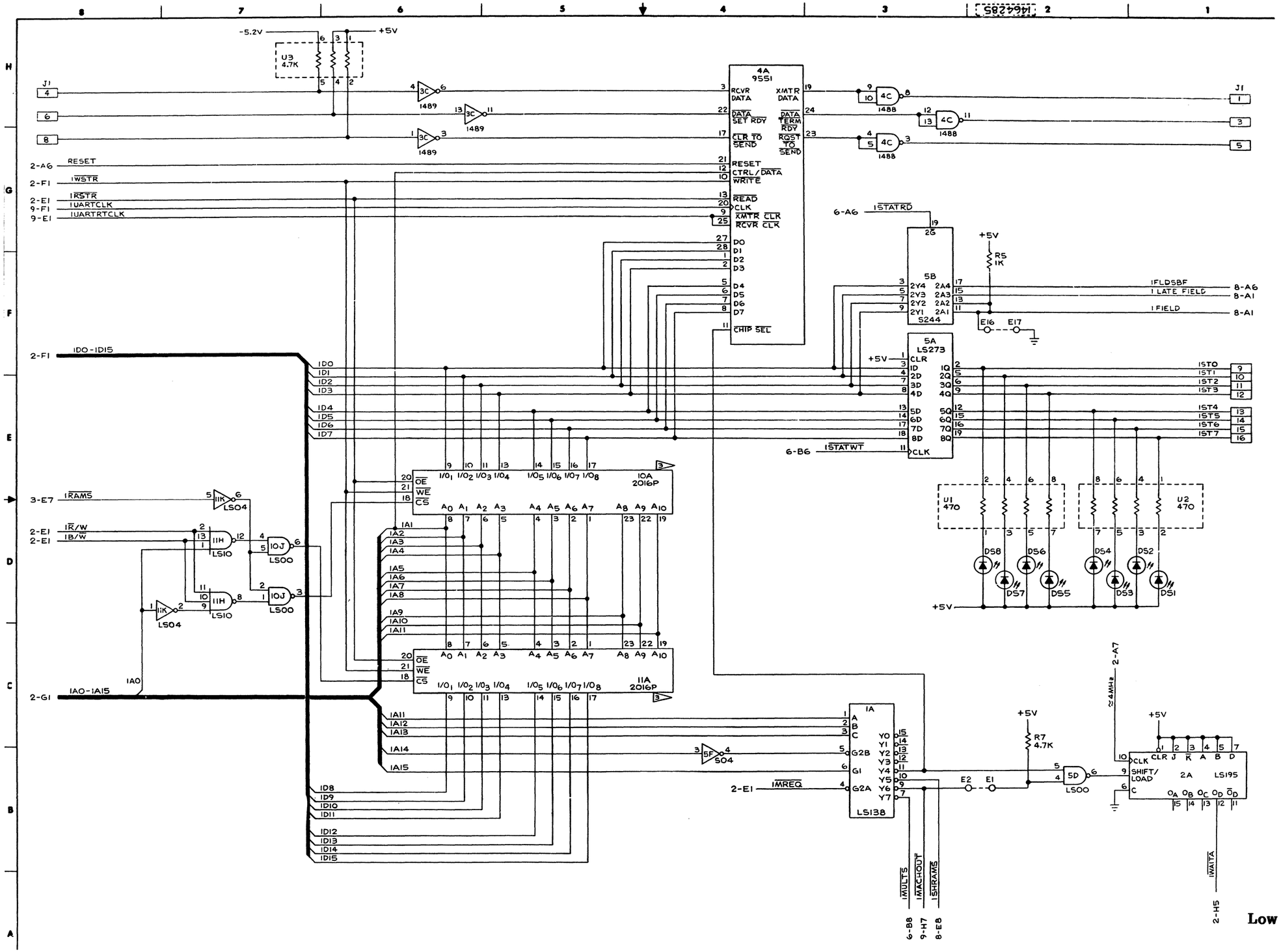

Schematic No. 1464285A.
Low Level Controller PWA, A26
(Sheet 4 of 9)

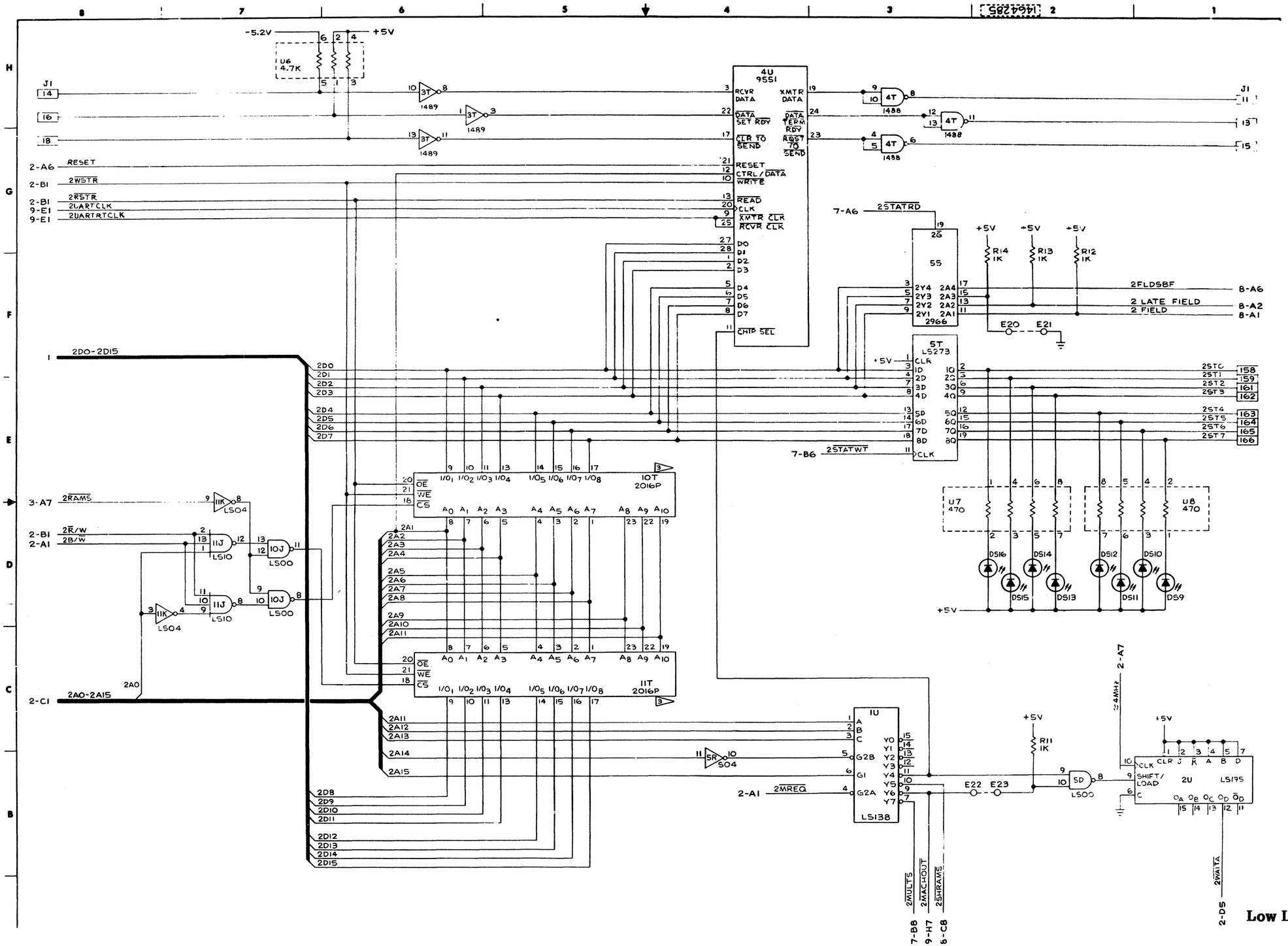

Schematic No. 1464285A.
Low Level Controller PWA, A26
(Sheet 5 of 9)

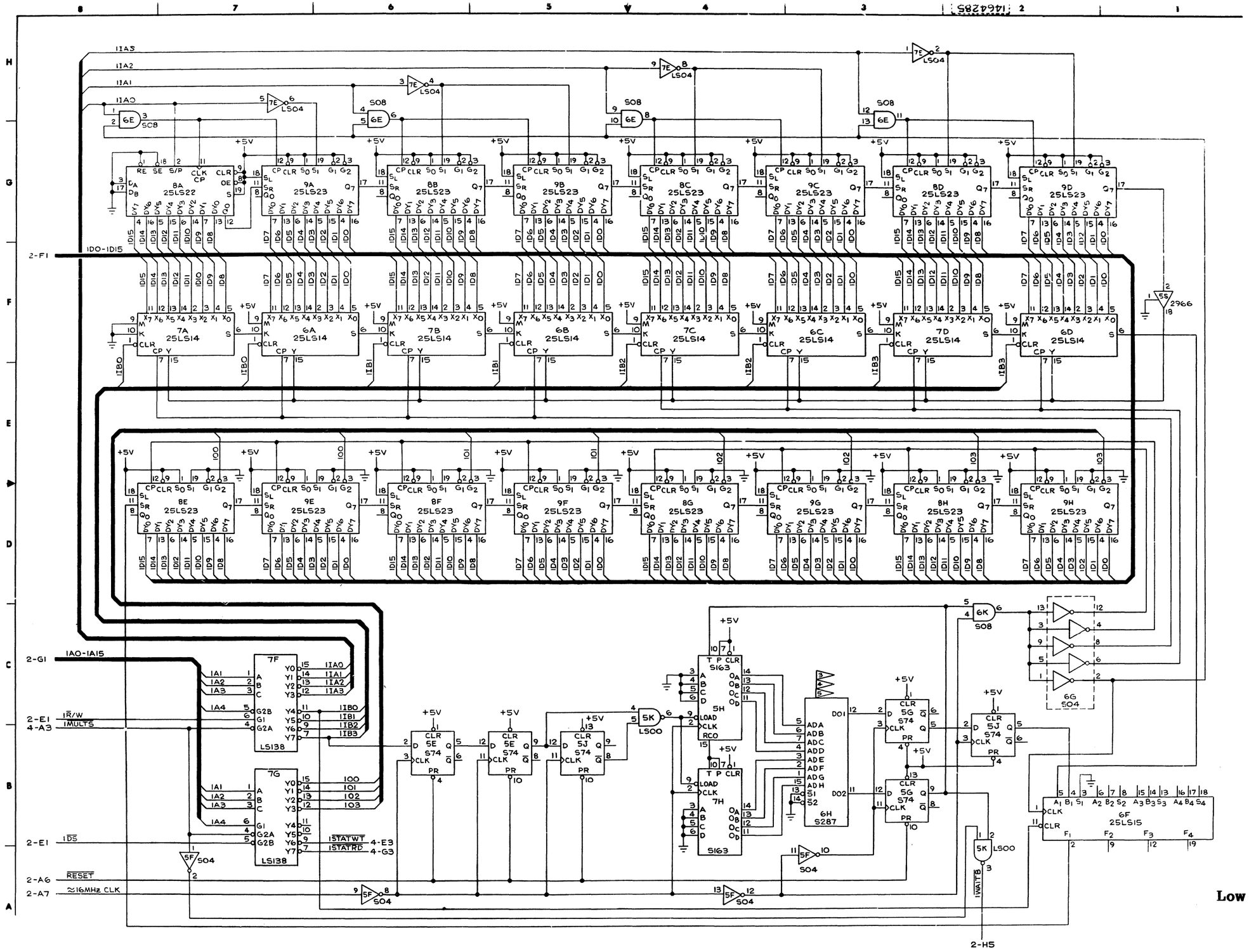

Schematic No. 1464285A.
Low Level Controller PWA, A26
(Sheet 6 of 9)

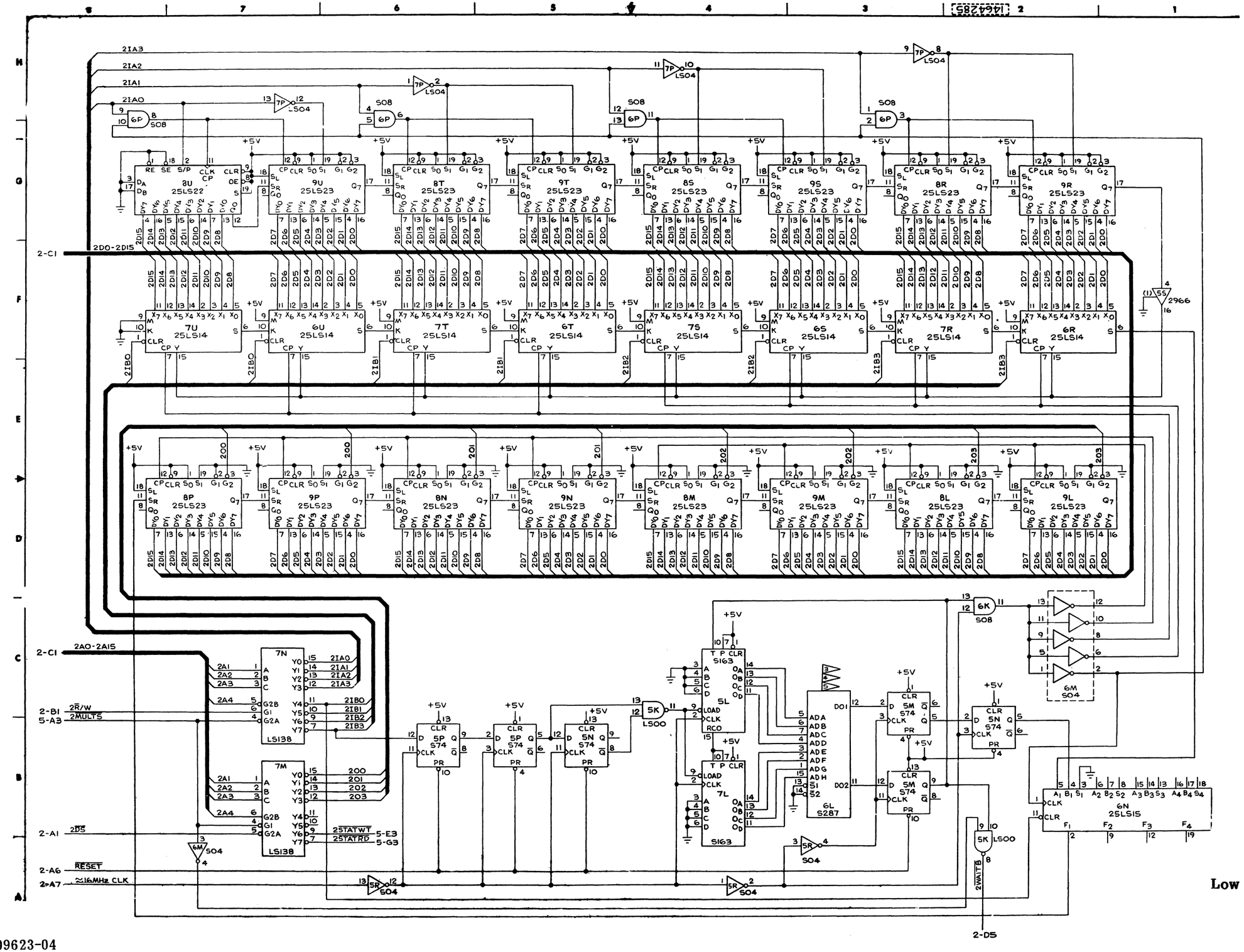

Schematic No. 1464285A.
Low Level Controller PWA, A26
(Sheet 7 of 9)

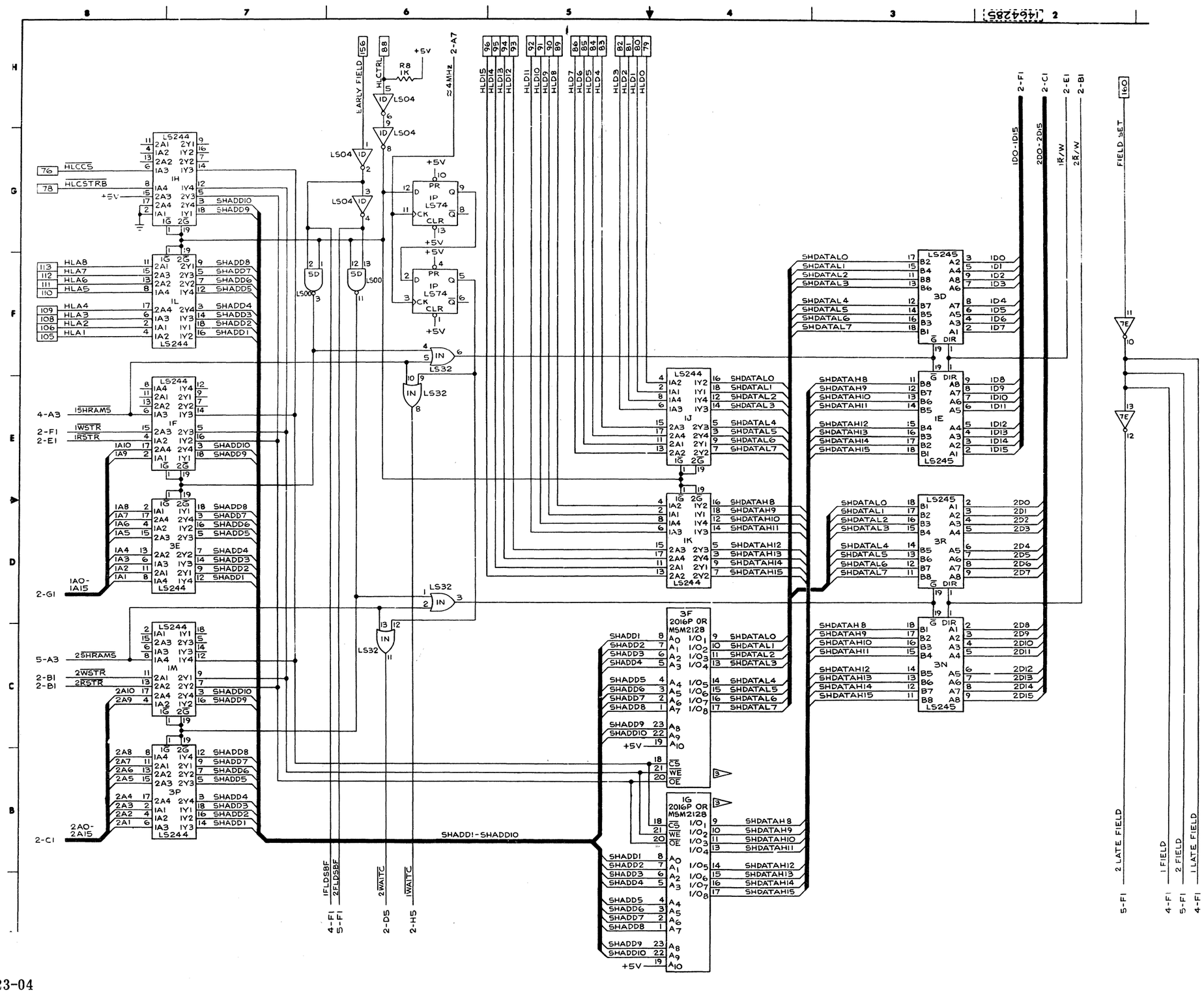

Schematic No. 1464285A.
Low Level Controller PWA, A26
(Sheet 8 of 9)

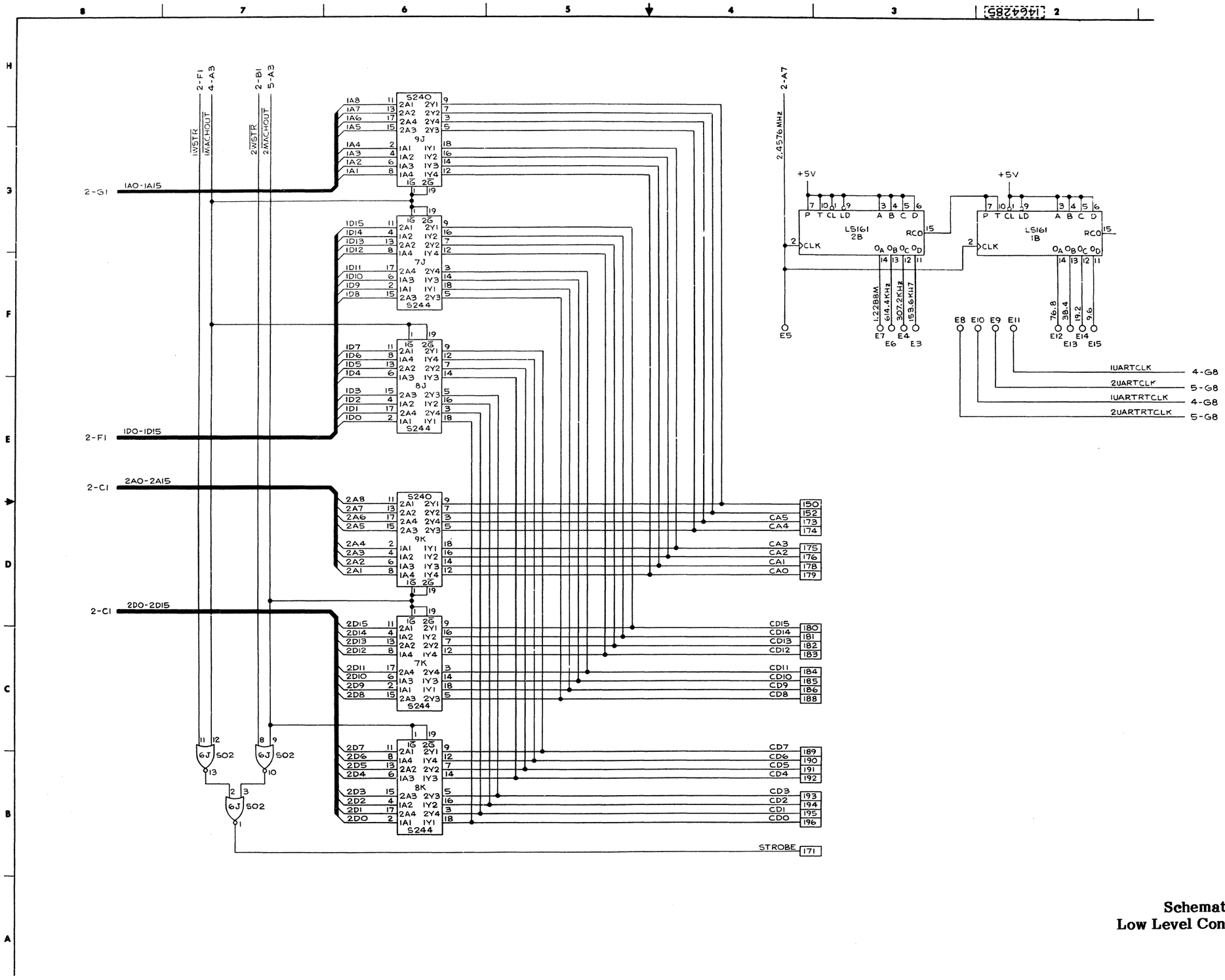

Schematic No. 1464285A.
Low Level Controller PWA, A26
(Sheet 9 of 9)

ITEM NO.	PART NUMBER	D DESCRIPTION	REF DESIG	QTY REQD PER DASH NUMBER -01	-02	-03	-04
1							
2							
3	1464288	SCHEMATIC		(-)	(-)	(-)	C
4							
5	1409670-BH	LABEL, EXTRACTOR ARM, PWA		1	1	1	1
6	1409976-AA	INSULATOR, STIFFENER		1	1	1	1
7	1409976-AB	INSULATOR, STIFFENER		1	1	1	1
8	1409997-AA	STIFFENER, PWB		1	1	1	1
9	1409997-AB	STIFFENER, PWB		1	1	1	1
10							
11	1420380-01	PROM ASSY, HLC	4N	1	1	1	1
12	1420403-01	PROM ASSY HLC	8R	1	1	1	1
13							
14	064-314	CAPACITOR, CER., 1uF, 50V, 20%	C62	1	1	1	1
15	064-315	CAPACITOR, CER., 1.5uF, 50V, 20%	C29,30	2	2	2	2
16	064-653	CAPACITOR, CER., .1uF, 50V, ±20%	C1-15,19-28, 31-44,46,47, 49-51,55-61,63,67,69,72-75	58	58	58	58
17							
18	034-206	CAPACITOR, MICA., 18pF, 500V, ±.5pF	C71	1	1	1	1
19	034-207	24pF, ±.5pF	C65	1	1	1	1
20	034-212	330pF, 5%	C66	1	1	1	1
21	034-319	270pF,	C76,77	2	2	-	-
22	034-347	180pF,	C70	1	1	1	1
23	034-962	CAPACITOR, MICA, 33pF, 500V, 5%	C68	1	1	1	1
24	034-184	CAPACITOR, MICA, 68pF, 500V, ±5%	C76,77		-	2	2
25							
26	037-892	CAPACITOR, TANT., 47uF, 20V, 20%	C48,64	2	2	2	2
27	037-965	CAPACITOR, TANT., 120uF, 10V, 20%	C16	1	1	1	1
28							
29	017-240	CRYSTAL, 31.9488 MHZ	Y1	1	1	1	1
30							
31	013-689	DIODE, CD6016	CR4	1	1	1	1
32							
33	581-567	DIODE, LIGHT-EMITTING, RED	DS1-18	18	18	18	18
34							
35	135-239	HEADER ASSY, RT ANGLE, 10 POSITION	J1	1	1	1	1
36							

LM-1464286

AMPEX | Ampex Corporation REDWOOD CITY, CALIFORNIA | CODE IDENT NO 92739 | LIST OF MATERIALS | LM-1464286 SHEET 2 OF 3 | REV G

ITEM NO.	PART NUMBER	DESCRIPTION	REF DESIG	QTY REQD PER DASH NUMBER -01	-02	-03	-04
37	068-212	INDUCTOR, VAR., 1.0uH	L1	1	1	1	1
38							
39	000-044	INTEGRATED CIRCUIT, WD1510-01	4B	1	1	1	1
40	000-133	74S373	7S,T	2	2	2	2
41	000-138	74LS195	5F	1	1	1	1
42	000-148	AM2966	7M,8K	2	2	2	2
43	001-042	DS3692	2G	1	1	1	1
44	001-061	1489	5D	1	1	1	1
45	001-953	1488	6E	1	1	1	1
46	589-820	74LS74	1E,4D,E,F,5T	5	5	5	5
47	589-823	74LS138	4L,5L,6B	3	3	3	3
48	589-824	74LS153	8L	1	1	1	1
49	589-825	74LS157	7N,P	2	2	2	2
50	589-837	74S00	5E,6P,7R	3	3	3	3
51	589-838	74S04	2D,T,4R,5S,7L	5	5	7	5
52	589-839	74S08	3G,5R,7C	3	3	3	3
53	589-846	74S74	4P,5N,P	3	3	3	3
54	589-847	74S86	1K	1	1	1	1
55	589-850	74S163	3T,4M,T,5M	4	4	4	4
56	589-933	74LS161	6C,D	2	2	2	2
57	590-193	9637	3F	1	1	1	1
58	590-328	74LS32	3D	1	1	1	1
59	590-329	74LS123	2F	1	1	1	1
60	590-335	74LS273	8M,9N	2	2	2	2
61	590-443	74S02	1F,8N	2	2	2	2
62	590-552	74LS279	2E	1	1	1	1
63	590-584	74LS244	1C,D,L,N,P,S	6	6	6	6
64	590-615	74LS139	3E	1	1	1	1
65	590-725	NE555	9R	1	1	1	1
66	590-847	74LS245	6S,T,7J,K	4	4	4	4
67	590-854	74S240	8P,9P	2	2	2	2
68	590-861	25LS14	2H,J,K,L,3H, J,K,L	8	8	8	8
69	590-862	25LS15	4S	1	1	1	1
70	590-864	25LS22	5G	1	1	1	1
71	590-865	25LS23	2M,N,P,R,3M,N,P,R, 4G,H,J,K,5H,J,K	15	15	15	15
72	590-866	AMZ8002DC	8T	1	1	1	1
73	590-867	AM9551-4PC	5B	1	1	1	1
74	590-868	74S244	1G,H,J *	3	3	3	3
75	590-932	CDP1854ACD	2B	1	1	1	1
76	590-989	INTEGRATED CIRCUIT, TMS4164-15 [1]	8B,C,D,E,F,G,H,J, 9B,C,D,E,F,G,H,J	16	16	16	16
77							
78							
79							
80	066-660	RESISTOR, C.F., 22 OHMS, 1/4W, 5%	R33	1	1	1	1
81	066-663	RESISTOR, C.F., 220 OHMS, 1/4W, ±5%	R26,32	2	2	2	2

LM-1464286

AMPEX | Ampex Corporation REDWOOD CITY, CALIFORNIA | CODE IDENT NO. 92739 | LIST OF MATERIALS | LM-1464286 SHEET 3 OF 3 | REV G

ITEM NO.	PART NUMBER	DESCRIPTION	REF DESIG	QTY REQD PER DASH NUMBER -01	-02	-03	-04
82	066-665	RESISTOR, C.F., 1K OHMS, 1/4W, ±5%	R28	1	1	1	1
83	066-668	4.7K	R1,3-5,27	5	5	5	5
84	066-673	1M	R24,36	2	2	2	2
85	066-715	1.2K	R31	1	1	1	1
86	066-814	270	R29	1	1	1	1
87	066-818	470	R6,12,30,34, 37	5	5	5	5
88	066-830	10K	R21	1	1	1	1
89	066-842	5.1K	R9,11,35	3	3	3	3
90	066-843	6.2K	R23	1	1	1	1
91	066-912	82K	R7,8	2	2	2	2
92	076-004	RESISTOR, C.F., 180 OHMS, 1/4W, ±5%	R10	1	1	1	1
93							
94							
95							
96	039-163	RESISTOR, NETWORK, 470 OHMS, 10 PIN SIP	RN 14,15	2	2	2	2
97	039-241	RESISTOR, NETWORK, 4.7 OHMS, 10 PIN SIP	RN 22,25	2	2	2	2
98	039-264	RESISTOR, NETWORK, 4.7K OHMS, 8 PIN SIP	RN 38	1	1	1	1
99							
100	014-364	TRANSISTOR, PNP, CD438	Q5	1	1	1	1
101	014-780	TRANSISTOR, NPN, MPS6514-5	Q2-4	3	3	3	3
102							
103	119-837	SWITCH, DIP, 8 X SPST	S1,2	2	2	2	2
104							
105	187-055	TERMINAL, WIREWRAP	E27,28	2	2	2	2
106							
107	302-395	STRAP, MOUSETAIL	REF:Y1	1	1	1	1
108							
109	582-280	I.C., MTG HDW., SOCKET, 24 PIN	REF:1A,2A,3A,4A,5A,6A 7A,8A,9A,10A,11A, 12A,13A,14A,15A, 16A	16	16	16	16
110	582-281	28 PIN	REF:4B,5B,8A	3	3	3	3
111	582-282	40 PIN	REF:2B,8T	2	2	2	2
112	582-329	8 PIN	REF:3F,9R	2	2	2	2
113	582-330	14 PIN	REF:1E,F,K,2D,T,3D,G, 4D,E,F,P,R,5D,E, N,P,R,S,T,6E,P, 7C,L,R,8N	25	25	25	25
114	582-331	16 PIN	REF:2E,F,G,H,J,K,L,3E, H,J,K,L,T,4L,M,N, T,5F,L,M,6B,C,D,7N,P,8B,C,D, E, F,G,H,J,L,9B,C,D,E,F,G,H,J	42	42	42	42
115	582-333	I.C., MTG HDW., SOCKET, 20 PIN	REF:1C,D,G,H,J,L,N,P, S,2M,N,P,R,3M,N, P,R,4G,H,J,K,S,5G,H,J,K,6S, T,7J,K,M,S,T,8K,M,P,9N,P	38	38	38	38
116	280-998	TRANSISTOR, MTG. HDW., 5 PIN	REF:Q5				1
117							
118	471-060	SCREW, PAN HD., X-REC, #4-40 X .250 LG		6	6	6	6
119	493-005	NUT, HEX, NYLON LOCK, #4-40		6	6	6	6
120	530-477	ENCLOSURE PART, CARD INSERTER/EXTRACTOR		2	2	2	2
121		NOTES:					
122		1 STATIC SENSITIVE DEVICE, SPECIAL HANDLING REQUIRED PER AMPEX STD HE1-1.					

LM-1464286

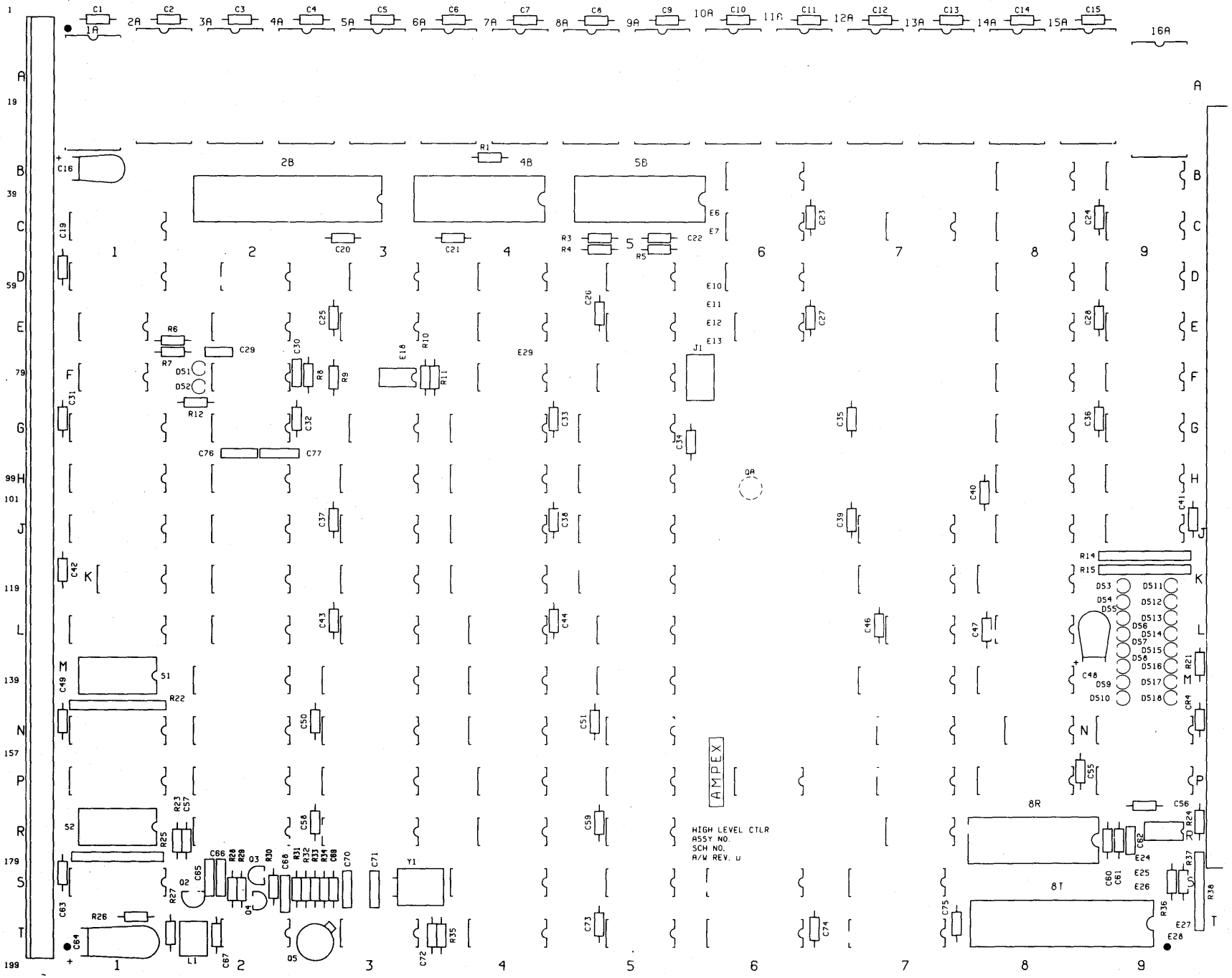

Assembly No. 1464286-04G. High Level Controller PWA, A27

NOTES: UNLESS OTHERWISE SPECIFIED.

1. RESISTANCE VALUES ARE IN OHMS, 1/4W, 5%.
2. CAPACITANCE VALUES ARE IN MICROFARADS.

⚠ STATIC SENSITIVE DEVICE: SPECIAL HANDLING REQ'D. PER AMPEX STD HEI-1.

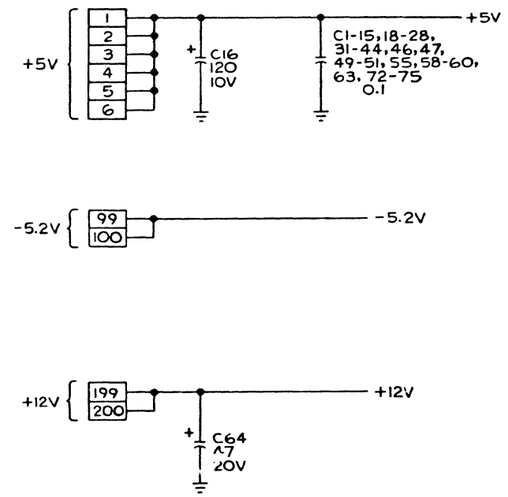

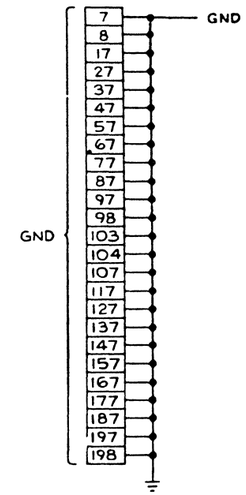

REF DES	
LAST USED	NOT USED
C77	C17, 45, 52-54
CR4	CR1-3
DS18	
E29	E1-5, 8, 9, 14, 15, 19-23
L1	
Q5	Q1
R38	R2, 13, 16-20
S2	
Y1	

I.C. LIST

REF DES	4N	1A	2A	3A	4A	5A	6A	7A ⚠	8A ⚠	9A	10A	11A	12A	13A	14A	15A ⚠	16A ⚠		8R
AMPEX P/N	1420380-01	FOR FUTURE USE	FOR FUTURE USE	FOR FUTURE USE	FOR FUTURE USE	FOR FUTURE USE	FOR FUTURE USE	1465629-01	1465630-01	FOR FUTURE USE	FOR FUTURE USE	FOR FUTURE USE	FOR FUTURE USE	FOR FUTURE USE	FOR FUTURE USE	1465631-01	1465632-01		1420403-01
VENDOR P/N	14S10							TMS2532-45	TMS2532-45							TMS2532-45	TMS2532-45		82S100
VOLTAGE (PIN)	+5V (16)							+5V (21,24)	+5V (21,24)							+5V (21,24)	+5V (21,24)		+5V (28)
GND (PIN)	(8)							(12)	(12)							(12)	(12)		(14)

I.C. LIST (CONTINUED)

REF DES	2D, T, 4R, 5S, 7L	4P, 5N, P	1K	4L, 5L, 6B	9R	1E, 4D, E, F, 5T	3E	3D	2F	1F, 8N	3G, 5R, 7C	2E	7N, P	6C, D	8L	5D	3T, 4M, T, 5M	8P, 9P	5F
AMPEX P/N	589-838	589-846	589-847	589-823	590-725	589-820	590-615	590-328	590-329	590-443	589-839	590-552	589-825	589-933	589-824	001-061	589-850	590-854	000-138
VENDOR P/N	74S04	74S74	74S86	74LS138	NE555N	74LS74	74LS139	74LS32	74LS123	74S02	74S08	74LS279	74LS157	74LS161	74LS153	1489	74S163	74S240	74LS195
VOLTAGE (PIN)	+5V (14)	+5V (14)	+5V (14)	+5V (16)	+5V (8)	+5V (14)	+5V (16)	+5V (14)	+5V (16)	+5V (14)	+5V (14)	+5V (16)	+5V (16)	+5V (16)	+5V (16)	+5V (14)	+5V (16)	+5V (20)	+5V (16)
GND (PIN)	(7)	(7)	(7)	(8)	(1)	(7)	(8)	(7)	(8)	(7)	(7)	(8)	(8)	(8)	(8)	(7)	(8)	(10)	(8)

I.C. LIST (CONTINUED)

REF DES	8M, 9N	1C, D, L, N, P, S	6S, T, 7J, K	7S, T	1G, H, J	6E	3F	2G	2B	7M, 8K	2H, J, K, L, 3H, J, K, L	4S	5G	2M, N, P, R, 3M, N, P, R, 4G, H, J, K, 5H, J, K	8T	5B	8B, C, D, E, F, G, H, J, 9B, C, D, E, F, G, H, J	4B
AMPEX P/N	590-835	590-584	590-847	000-133	590-868	001-953	590-193	001-042	590-932	000-148	590-861	590-862	590-864	590-865	590-866	590-867	590-989	000-044
VENDOR P/N	74LS273	74LS244	74LS245	74S373	74S244	1488	9637	DS3692	CDP1854ACD	AM2966	25LS14	25LS15	25LS22	25LS23	AMZ8002	AM9551-4PC	TMS4164-15	WD1510-01
VOLTAGE (PIN)	+5V (20)	+5V (20)	+5V (20)	+5V (20)	+5V (20)	-5.2V (1) +12V (14)	+5V (1)	+5V (1) -5.2V (8)	+5V (1)	+5V (20)	+5V (16)	+5V (20)	+5V (20)	+5V (20)	+5V (10)	+5V (26)	+5V (8)	+5V (16)
GND (PIN)	(10)	(10)	(10)	(10)	(10)	(7)	(4)	(5)	(3)	(10)	(8)	(10)	(10)	(10)	(31)	(4)	(16)	(1)

I.C. LIST (CONTINUED)

REF DES	5E, 6P, 7R		
AMPEX P/N	589-837		
VENDOR P/N	74S00		
VOLTAGE (PIN)	+5V (14)		
GND (PIN)	(7)		

Schematic No. 1464288C.
High Level Controller PWA, A27
(Sheet 1 of 8)

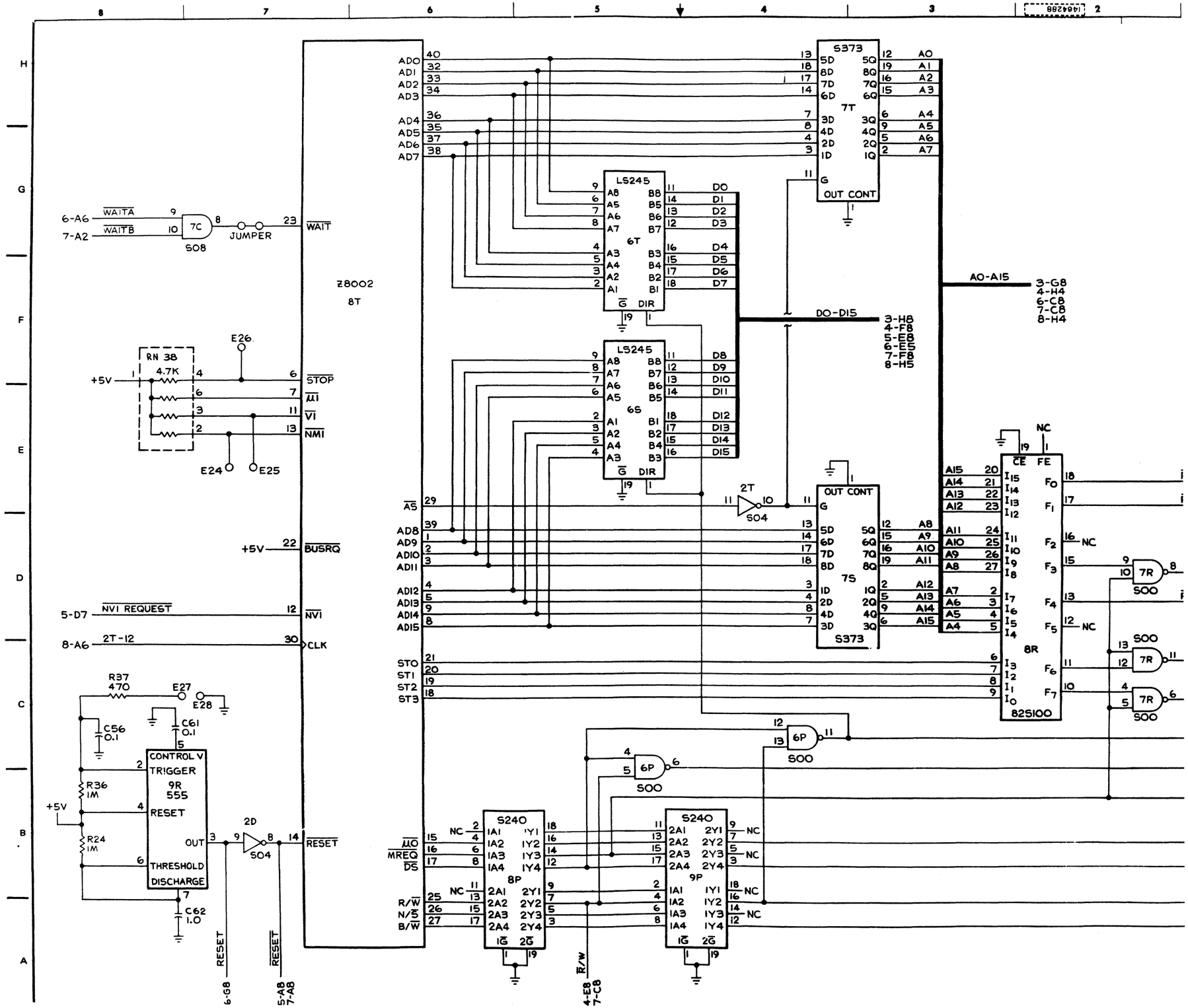

Ampex 1809623-05

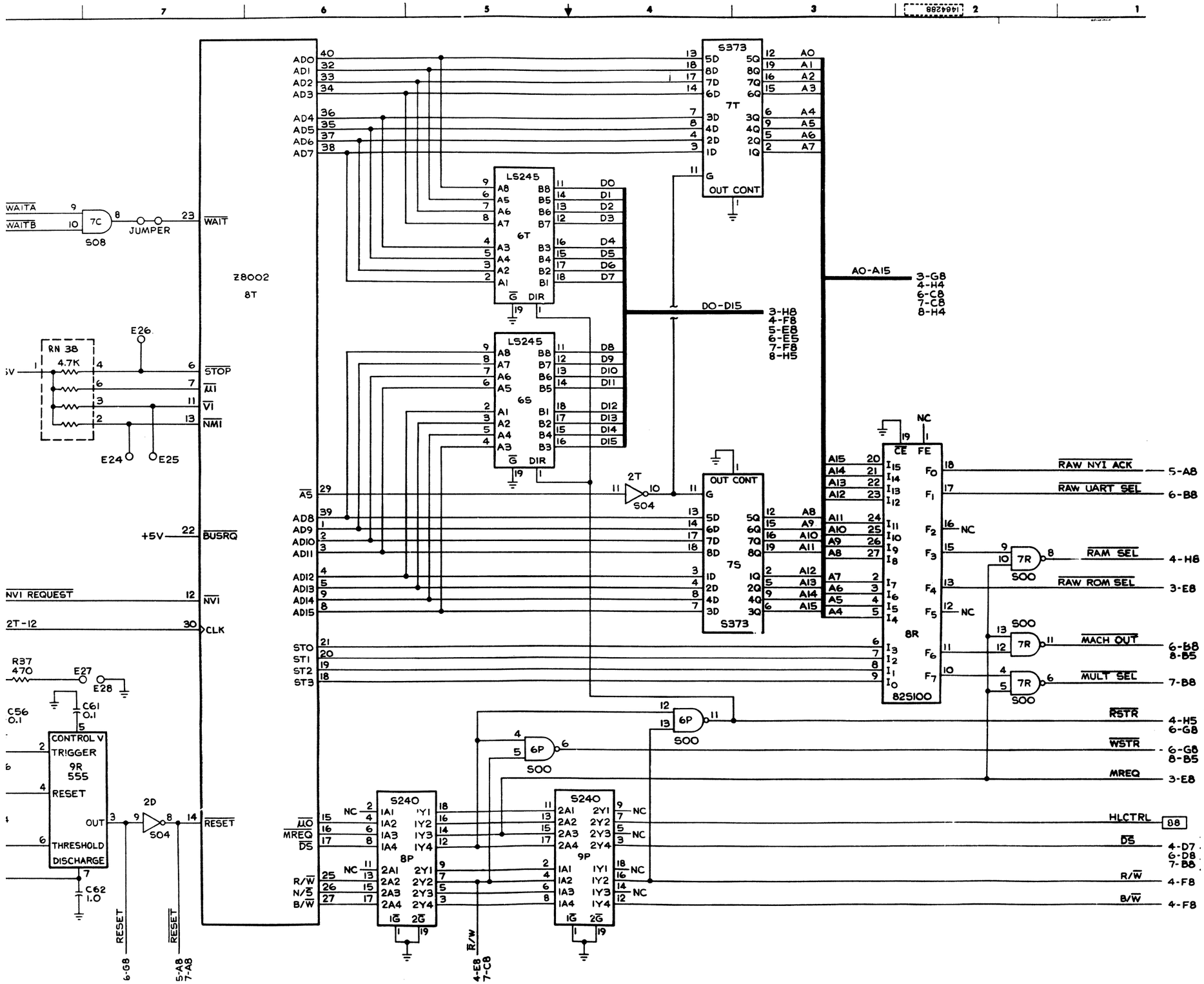

Schematic No. 1464288C.
High Level Controller PWA, A27
(Sheet 2 of 8)

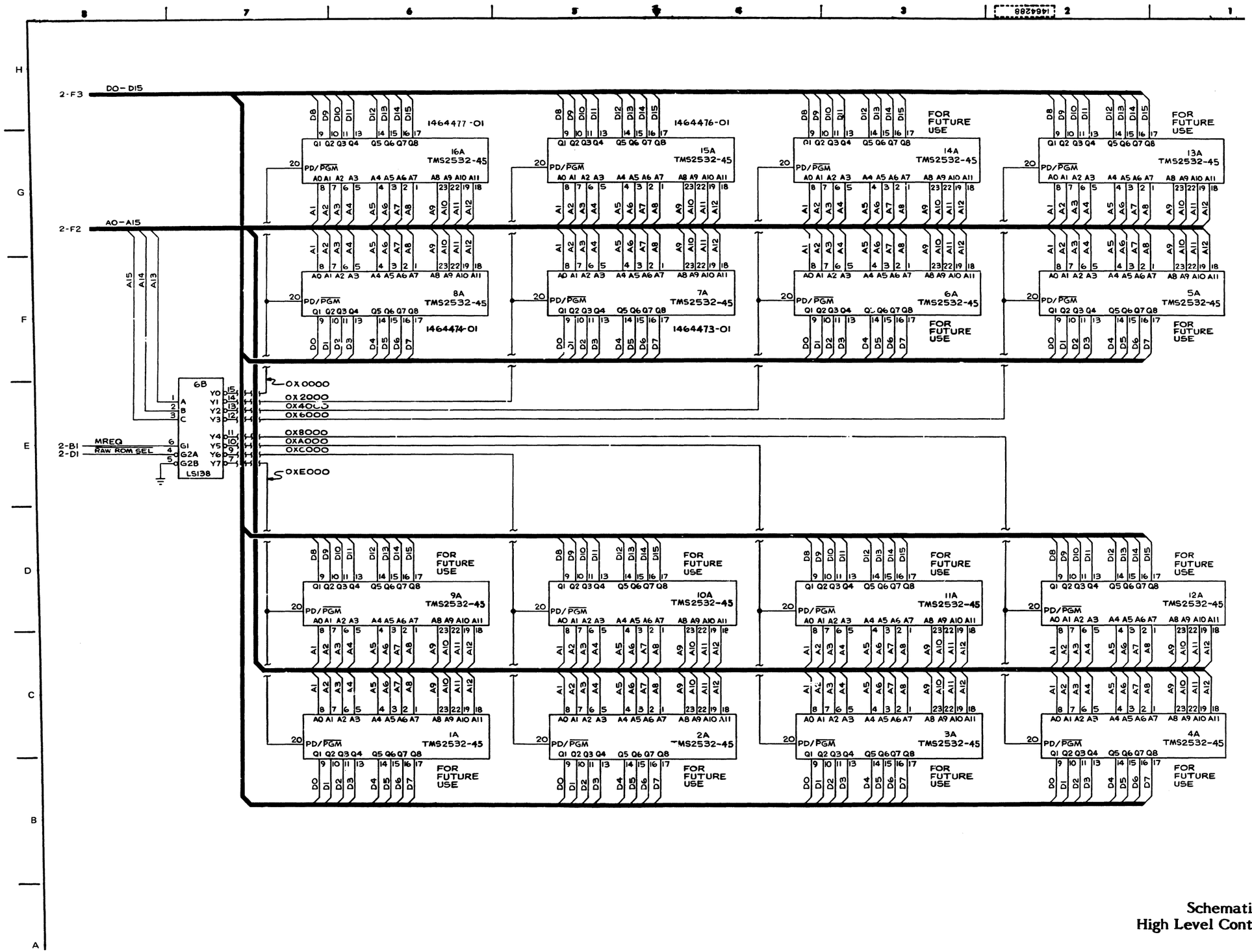

Schematic No. 1464288C.
High Level Controller PWA, A27
(Sheet 3 of 8)

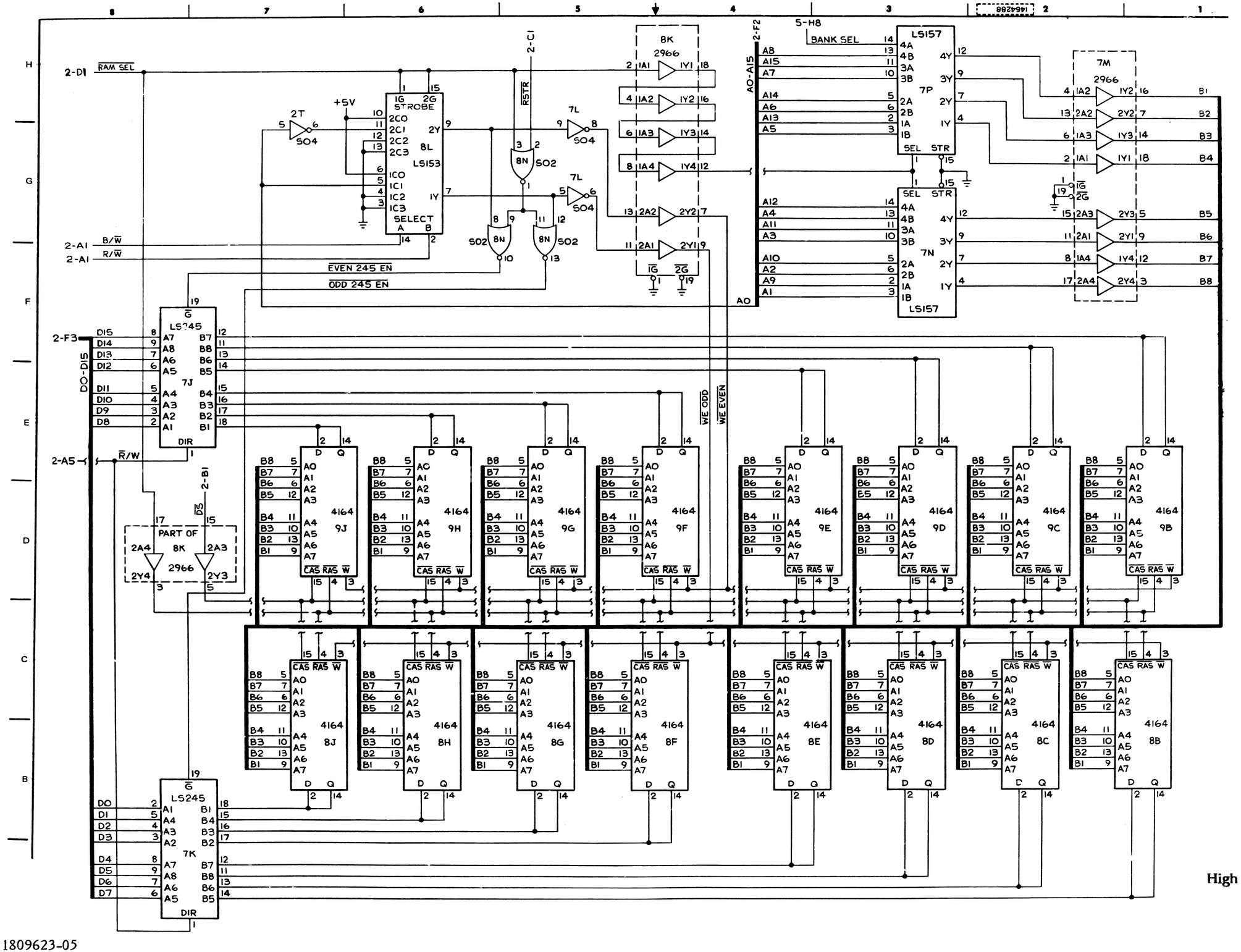

Schematic No. 1464288C.
High Level Controller PWA, A27
(Sheet 4 of 8)

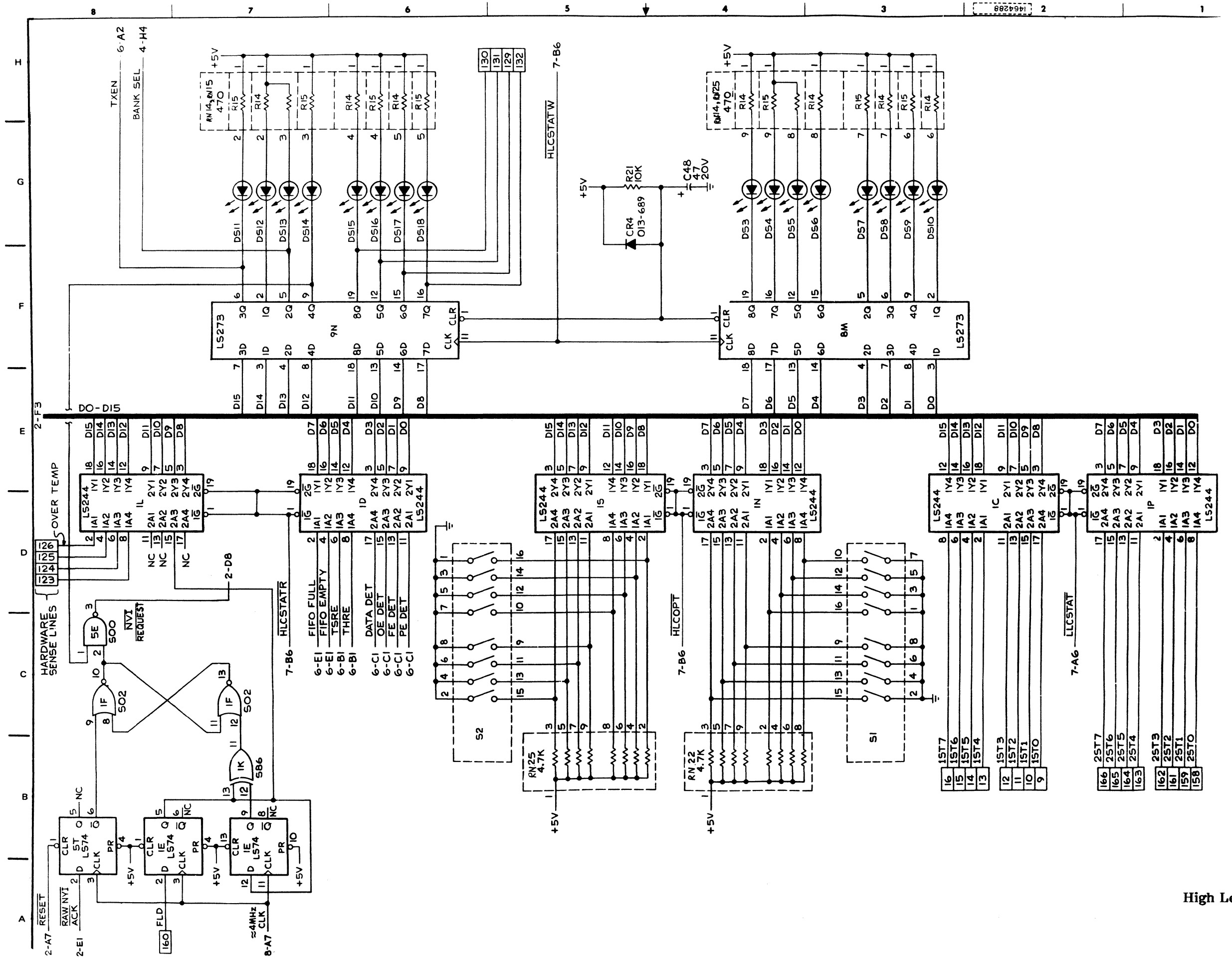

Schematic No. 1464288C.
High Level Controller PWA, A27
(Sheet 5 of 8)

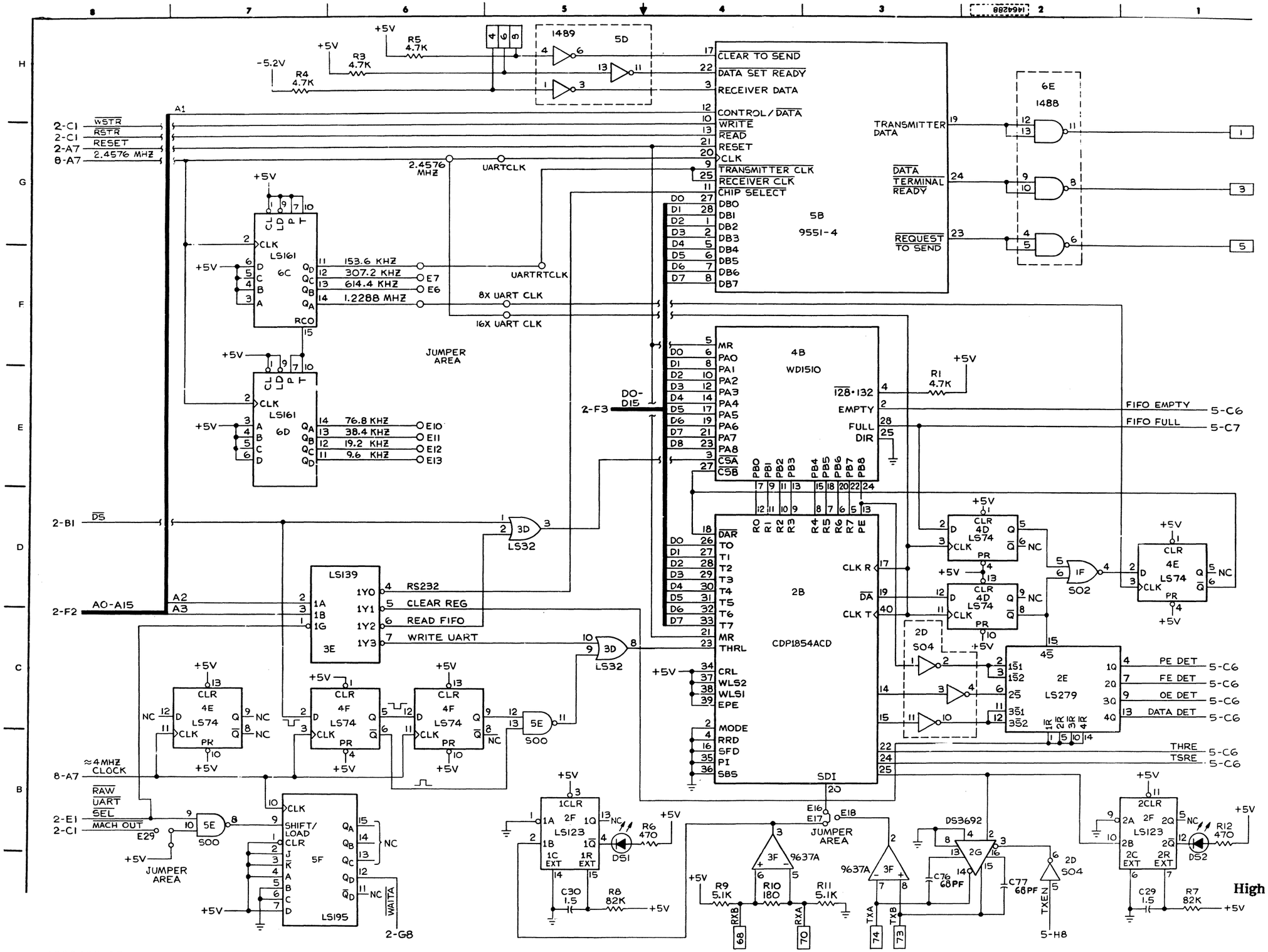

Schematic No. 1464288C.
High Level Controller PWA, A27
(Sheet 6 of 8)

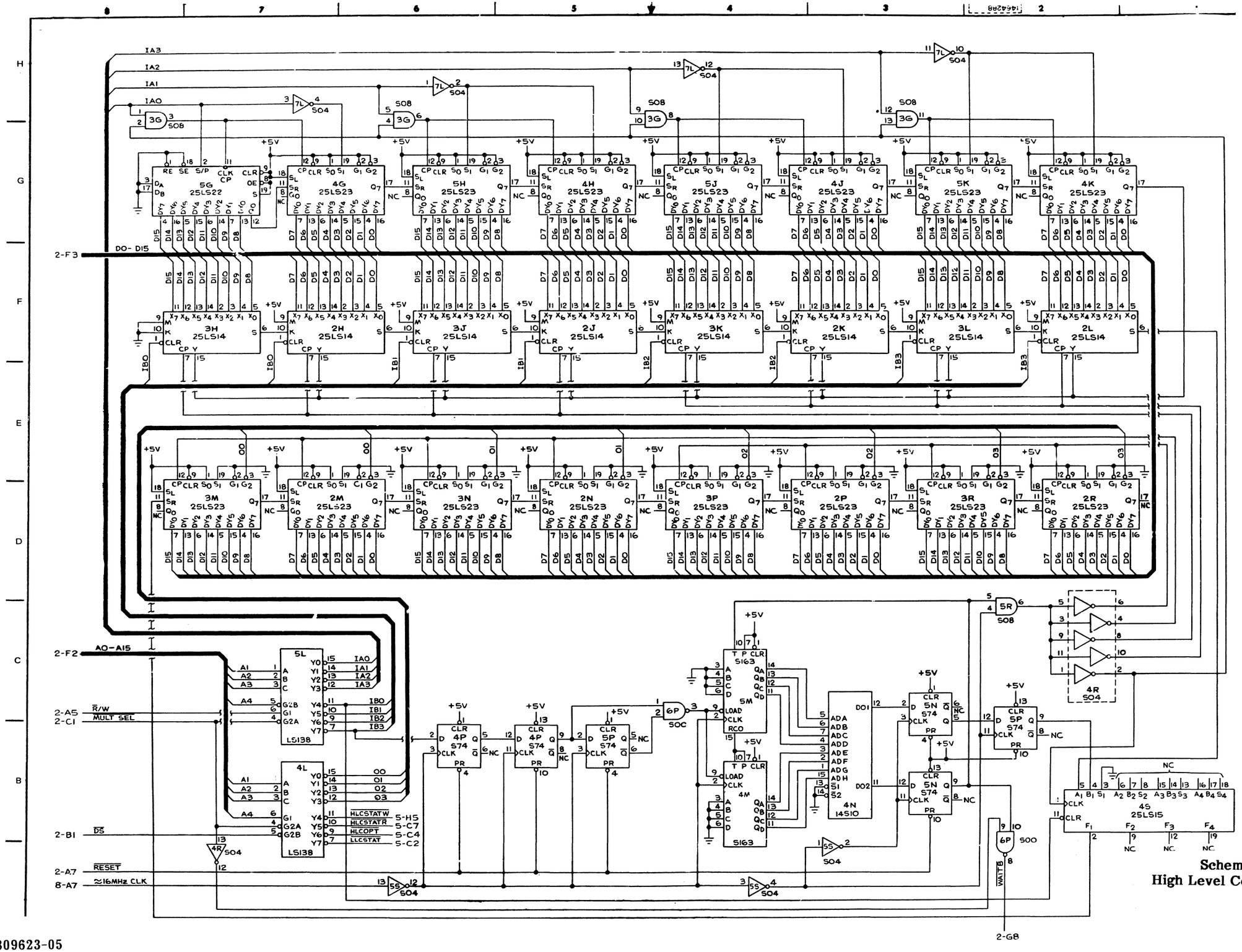

Schematic No. 1464288C.
High Level Controller PWA, A27
(Sheet 7 of 8)

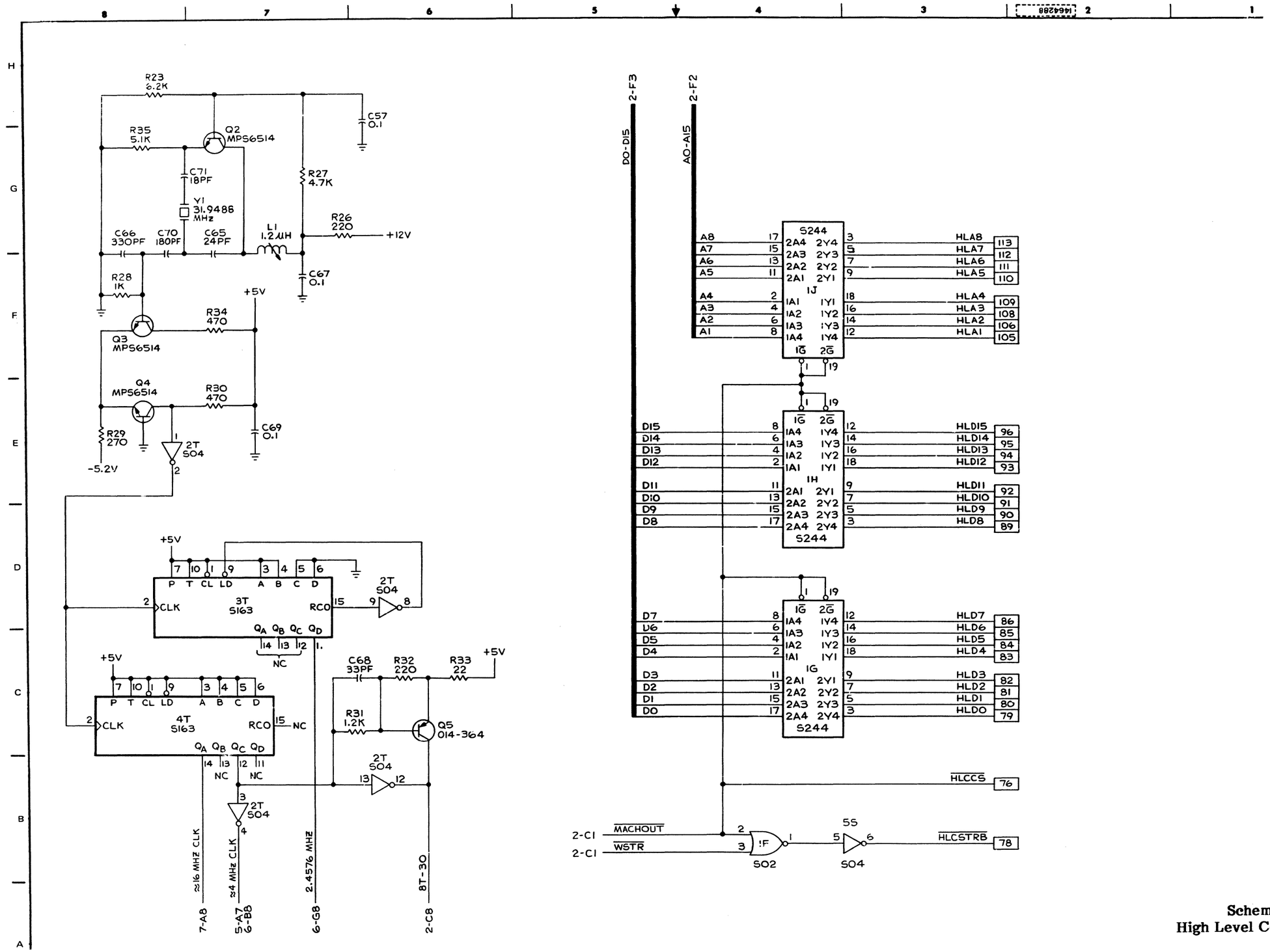

Schematic No. 1464288C.
High Level Controller PWA, A27
(Sheet 8 of 8)

ITEM NO.	PART NUMBER	DESCRIPTION	REF DESIG	QTY REQD PER DASH NUMBER -01
1				
2				
3	1420460	SCHEMATIC		E
4				
5				
6	1400004-01	EJECTOR, PWB		1
7	1420404-01	SHIELD, ANALOG		1
8	1462928-AU	LABEL, PWB EJECTOR, ANALOG		1
9				
10	1464240-01	PROM ASSY, 87S181 1	3C	1
11	1464241-01	87S181	3D	1
12	1464242-01	87S181	3E	1
13	1464243-01	87S181	3F	1
14	1464244-01	87S181	4D	1
15	1464245-01	87S181 1	4E	1
16	1464246-01	TBP28L22	4C	1
17	1464247-01	PROM ASSY, TBP28L22	4F	1
18				
19	064-652	CAPACITOR, CER., .01uF, 50V, ±20%	C6	1
20	064-653	CAPACITOR, CER., .1uF, 50V, ±20%	C2-5,7-32, 34	31
21				
22	037-965	CAPACITOR, TANT., 120uF, 10V, ±20%	C1,33	2
23				
24				
25	051-770	FERRITE - CHOKE	FL1,2	2
26				
27				
28	589-850	INTEGRATED CIRCUIT, 74S163	2A,3A,4A	3
29	590-464	10125	1A	1
30	590-564	10124	1B,1C,1D, 1E,1F	5
31	590-855	INTEGRATED CIRCUIT, 74S374	2B,D,E,3B, 4B	5
32				
33				
34	066-665	RESISTOR, FIXED, C.F., 1K OHMS, 1/4W, ±5%	R5-14	10
35	066-811	51	R1,2	2
36	066-838	330	R3	1
37	066-840	RESISTOR, FIXED, C.F., 680 OHMS, 1/4W, ±5%	R4	1

LM-1420458

AMPEX	Ampex Corporation REDWOOD CITY, CALIFORNIA	CODE IDENT NO 92739	LIST OF MATERIALS	LM-1420458 SHEET 2 OF 2	REV C

ITEM NO.	PART NUMBER	DESCRIPTION	REF DESIG	QTY REQD PER DASH NUMBER -01
38	119-438	SWITCH, ON-OFF-ON, C & K: 7103A	S4	1
39	120-967	SWITCH, ON-NONE-ON, C & K: 7101MD9AB	S2,3	2
40	119-920	SWITCH, THUMBWHEEL, 16 POS	S1	1
41				
42				
43	582-280	SOCKET, I.C., MTG HDW, 24 PIN	REF: 3C,D,E,F, 4D,E	6
44	582-331	SOCKET, I.C., MTG HDW, 16 PIN	REF: 1A,B,C,D,E F,2A,3A,4A	9
45	582-333	SOCKET, I.C., MTG HDW, 20 PIN	REF: 2B,D,E,3B, 4B,C,F	7
46				
47				
48				
49				
50				
51	473-324	SCREW, PAN HD., X-REC, 4-40 X .250 LG		5
52	473-326	SCREW, PAN HD., X-REC, 4-40 X .375 LG		1
53				
54	283-105	SPACER, UNTHD, .140 ID		1
55				
56	501-008	WASHER, PLAIN, #4		1
57	501-169	WASHER, PLAIN, SM PATTERN, #4		5
58	506-011	WASHER, BOWED		1

NOTES:

1. STATIC SENSITIVE DEVICE, SPECIAL HANDLING REQUIRED PER AMPEX STD HE1-1.

LM-1420458

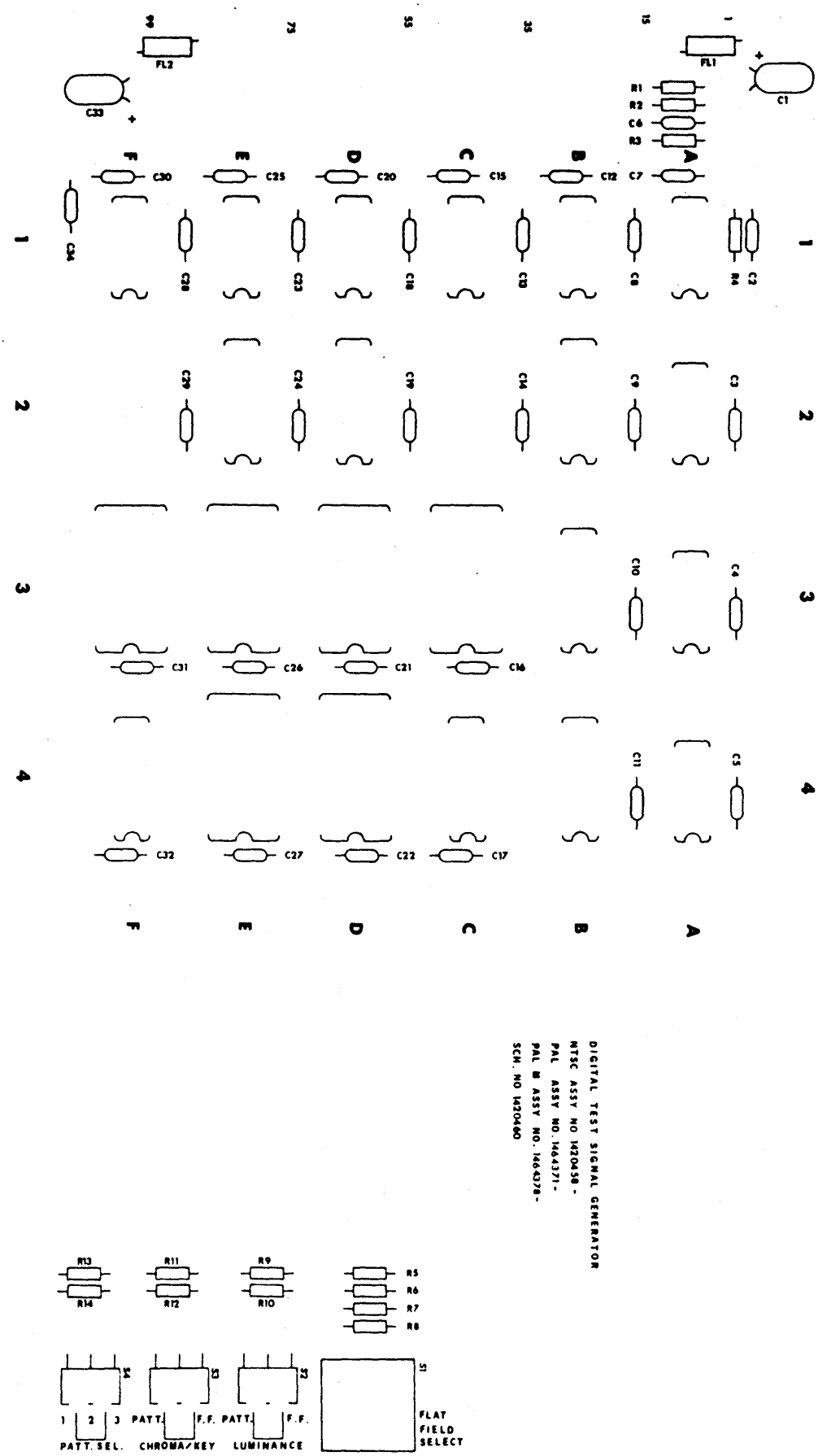

Assembly No. 1420458-01C. Digital Test Signal Generator PWA, NTSC

NOTES: UNLESS OTHERWISE SPECIFIED:

1. RESISTANCE VALUES ARE IN OHMS, 1/4W, 5%.
2. CAPACITANCE VALUES ARE IN MICROFARADS.

3 STATIC SENSITIVE DEVICE: SPECIAL HANDLING REQUIRED PER AMPEX STANDARD HEI-1.

4 PROMS USED WITH NTSC, PWA 1420458.

5 PROMS USED WITH PAL, PWA 1464371.

6 PROMS USED WITH PAL M, PWA 1464378.

I.C. CHART

REF DES	VENDOR P/N	NTSC AMPEX P/N 4	PAL AMPEX P/N 5	PAL M AMPEX P/N 6	GND PINS A	GND PINS D	GND PINS E	POWER PINS +5 VA	POWER PINS +5 VD	POWER PINS -5 V	POWER PINS +12 VA	POWER PINS +12 VD	POWER PINS -12 VA	POWER PINS -12 VD
3C 3	DM87S181	1464240-01	1464367-01	1420044-01		12			24					
3D		1464241-01	1464241-01	1420045-01		12			24					
3E		1464242-01	1464242-01	1420046-01		12			24					
3F 3	DM87S181	1464243-01	1464368-01	1464248-01		12			24					
4C	TBP28L22	1464246-01	1464369-01	1464249-01		10			20					
4D 3	DM87S181	1464244-01	1464244-01	1464250-01		12			24					
4E 3	DM87S181	1464245-01	1464591-01	1464251-01		12			24					
4F	TBP28L22	1464247-01	1464370-01	1464252-01		10			20					

I.C. CHART

REFERENCE DESIGNATION	VENDOR P/N	AMPEX P/N	GND PINS A	GND PINS D	GND PINS E	POWER PINS +5 VA	POWER PINS +5 VD	POWER PINS -5 V	POWER PINS +12 VA	POWER PINS +12 VD	POWER PINS -12 VA	POWER PINS -12 VD
2A, 3A, 4A	74S163	589-850		8			16					
2B, 2D, 2E, 3B, 4B	74S374	590-855		10			20					
1B, 1C, 1D, 1E, 1F	MC10124	590-564		16			9	8				
1A	MC10125	590-464		16			9	8				

REF DES	
LAST USED	NOT USED
C34 FL2 R14 S4	R1-4

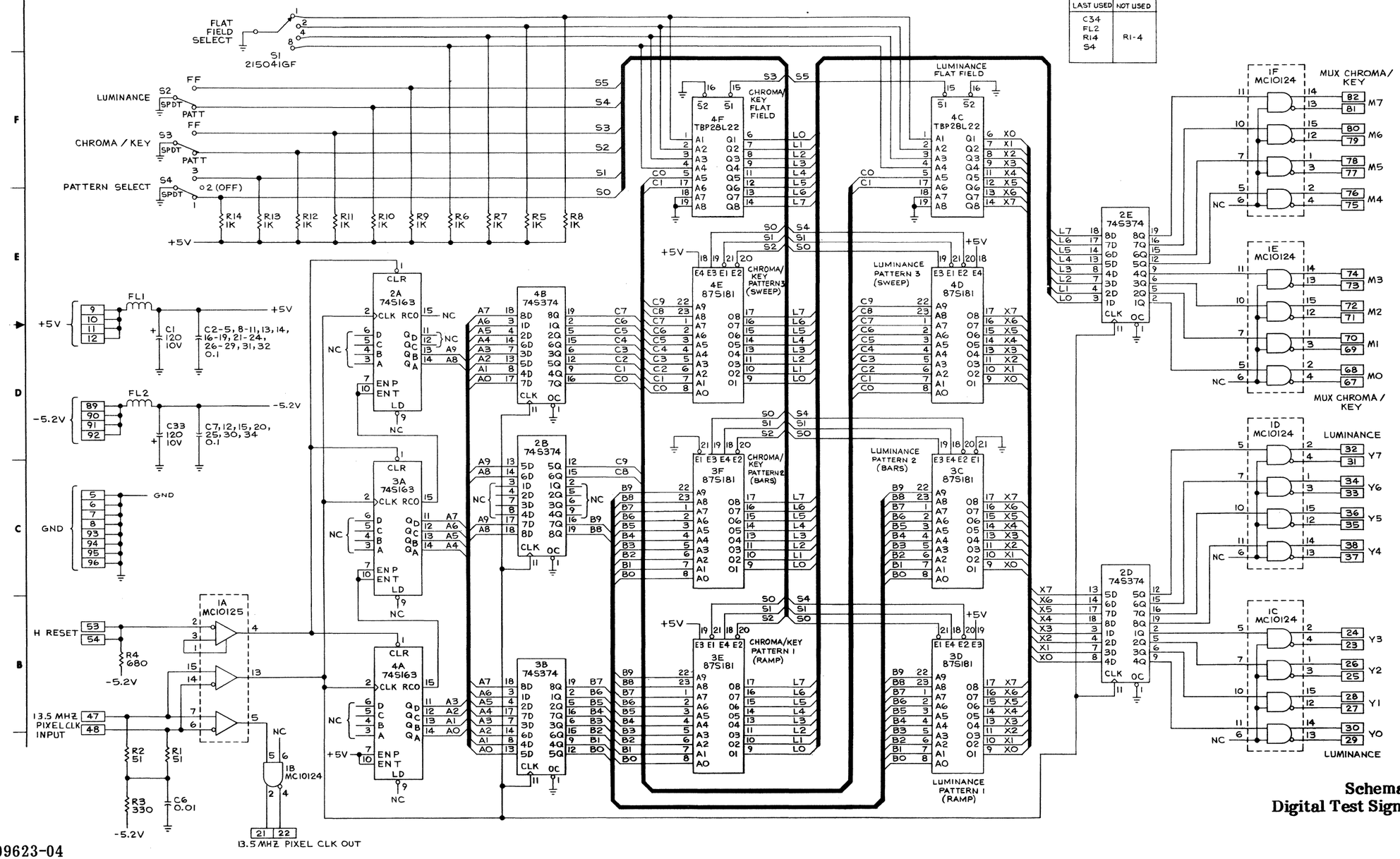

Schematic No. 1420460E.
Digital Test Signal Generator PWA

ITEM NO.	PART NUMBER	DESCRIPTION	REF DESIG	QTY REQD PER DASH NUMBER -01	-02
1				-01	
2					
3	1420460	SCHEMATIC		C	E
4					
5					
6	1400004-01	EJECTOR, PWB		1	1
7	1420404-01	SHIELD, ANALOG, PWB		1	1
8	1462928-AU	LABEL, PWB EJECTOR, ALALOG		1	1
9					
10	1464241-01	PROM ASSY, 87S181 1	3D	1	1
11	1464242-01	87S181	3E	1	1
12	1464244-01	87S181	4D	1	1
13	1464245-01	87S181	4E	1	-
14	1464367-01	87S181	3C	1	1
15	1464368-01	87S181 1	3F	1	1
16	1464369-01	TBP28L22	4C	1	1
17	1464370-01	PROM ASSY, TBP28L22	4F	1	1
18	1464591-01	PROM ASSY, 87S181 1	4E	-	1
19	064-652	CAPACITOR, CER., .01uF, 50V, ±20%	C6	1	1
20	064-653	CAPACITOR, CER., .1uF, 50V, ±20%	C2-5,7-32,34	31	31
21					
22	037-965	CAPACITOR, TANT., 120uF, 10V, ±20%	C1,33	2	2
23					
24					
25	051-770	FERRITE - CHOKE	FL1,2	2	2
26					
27					
28	589-850	INTEGRATED CIRCUIT, 74S163	2A,3A,4A	3	3
29	590-464	10125	1A	1	1
30	590-564	10124	1B,1C,1D,1E,1F	5	5
31	590-855	INTEGRATED CIRCUIT, 74S374	2B,D,E,3B,4B	5	5
32					
33					
34	066-665	RESISTOR, FIXED, C.F., 1K OHMS, 1/4W, ±5%	R5-14	10	10
35	066-811	51	R1,2	2	2
36	066-838	330	R3	1	1
37	066-840	RESISTOR, FIXED, C.F., 680 OHMS, 1/4W, ±5%	R4	1	1

LM-1464371

AMPEX	Ampex Corporation REDWOOD CITY, CALIFORNIA	CODE IDENT NO. 92739	LIST OF MATERIALS	LM-1464371 SHEET 2 OF 2	REV B

ITEM NO.	PART NUMBER	DESCRIPTION	REF DESIG	QTY REQD PER DASH NUMBER -01	-02
38	582-280	SOCKET, I.C., MTG HDW, 24 PIN	REF: 3C,D,E,F, 4D,E	6	6
39	582-331	SOCKET, I.C., MTG HDW, 16 PIN	REF: 1A,B,C,D,E,F, 2A,3A,4A	9	9
40	582-333	SOCKET, I.C., MTG HDW, 20 PIN	REF: 2B,D,E,3B, 4B,C,F	7	7
41					
42					
43	119-438	SWITCH, ON-OFF-ON, C & K: 7103A	S4	1	1
44	120-967	SWITCH, ON-NONE-ON, C & K: 7101HD9AB	S2,3	2	2
45	119-920	SWITCH, THUMBWHEEL, 16 POS	S1	1	1
46					
47					
48					
49					
50					
51	473-324	SCREW, PAN HD, XREC, 4-40 X .250 LG		5	5
52	473-326	SCREW, PAN HD., XREC, 4-40 X .375 LG		1	1
53					
54	283-105	SPACER, UNTHD, .140 ID		1	1
55					
56	501-008	WASHER, PLAIN, #4		1	1
57	501-169	WASHER, PLAIN, SM PATTERN, #4		5	5
58	506-011	WASHER, BOWED		1	1

NOTES:

1. STATIC SENSITIVE DEVICE, SPECIAL HANDLING REQUIRED PER AMPEX STD HE1-1.

LM-1464371

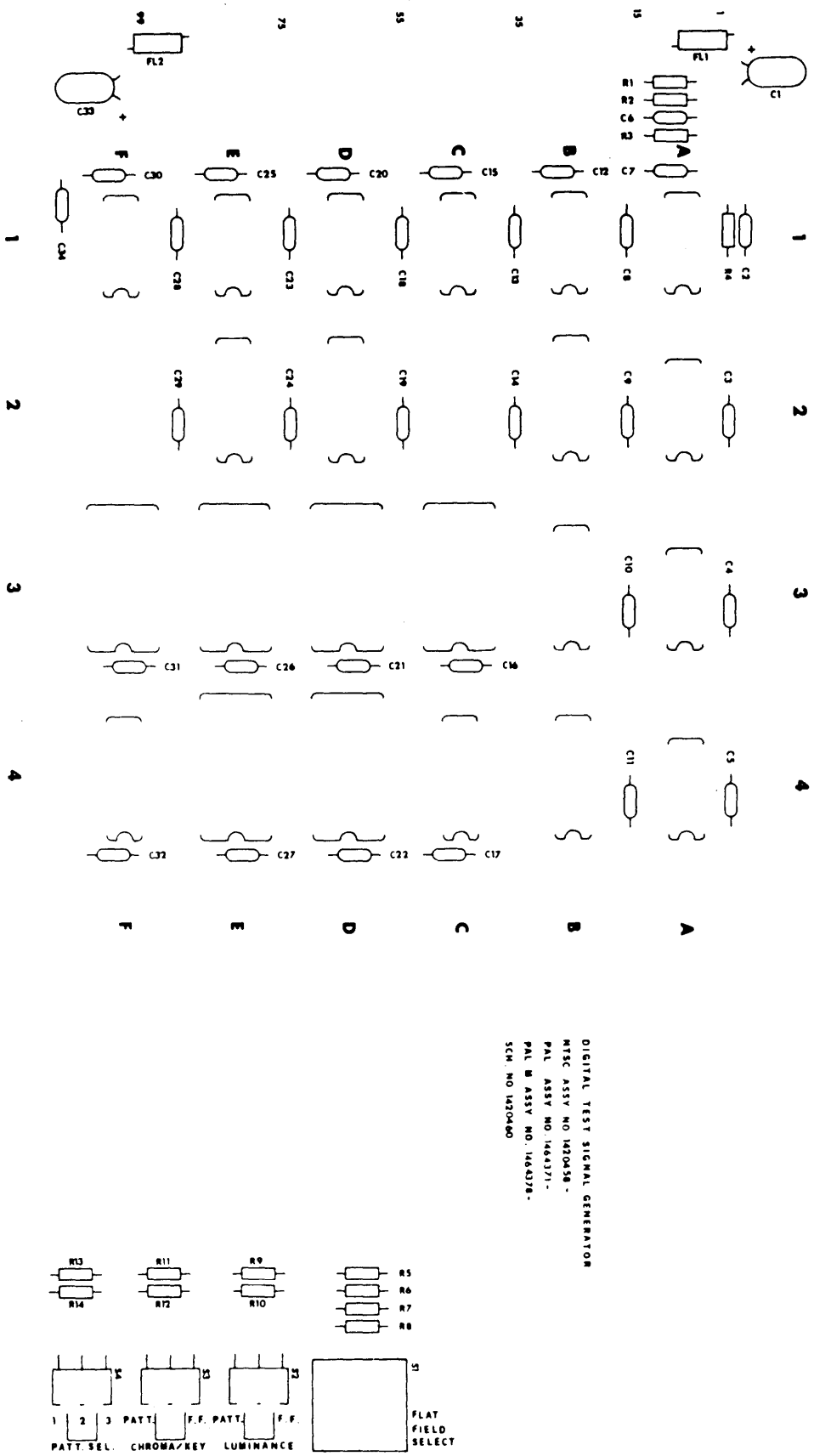

Assembly No. 1464371-02B. Digital Test Signal Generator PWA, PAL

ITEM NO.	PART NUMBER	DESCRIPTION	REF DESIG	QTY REQD PER DASH NUMBER -01	-02
1	1420180-04	KEYBOARD ASSEMBLY			-
2	1420479-01	CONTROL UNIT MISC PARTS KIT			1
3	1465092-01	120V MONITOR HOUSING ASSEMBLY			1
4	1420180-05	KEYBOARD ASSEMBLY			1

LM-1465091

ITEM NO.	PART NUMBER	DESCRIPTION	REF DESIG	QTY REQD PER DASH NUMBER -01	-02
1	1420180-04	KEYBOARD ASSEMBLY			—
2	1420479-01	CONTROL UNIT MISC PARTS KIT			1
3	1465095-01	230V MONITOR HOUSING ASSEMBLY			1
4	1420180-05	KEYBOARD ASSY			1

LM-1465094

ITEM NO.	PART NUMBER	D	DESCRIPTION	REF DESIG	QTY REQD PER DASH NUMBER -01	-02	-03	-04	-05
1	1420181-05		PWA, KEYBOARD SWITCH		1	1	1	1	1
2	1420184-12	2	PWA, KEYBOARD CPU		1	1	1	1	-
3	1420184-14	2	PWA, KEYBOARD CPU						1
4	1420231-02		BASE, KEYBOARD		1	1	1	1	1
5	1420232-02		COVER, KEYBOARD		1	1	1	1	1
6	1420237-01		PLATE, MOUNTING, PWA		1	1	1	1	1
7	1420261-01		BRACKET, LEFT		1	1	1	1	1
8	1420262-01		BRACKET, RIGHT		1	1	1	1	1
9	1420373-02		JOYSTICK MODIFIED ASSY		1	-	-	-	-
10	1420373-03		JOYSTICK, MODIFIED ASSY.			1	-	-	-
11	1420420-01		CABLE, INTERNAL CONNECT		1	1	1	1	1
12	1420421-01		CABLE, CONTROL STICK		1	1	-	-	-
13	1420430-01	1	INSULATOR KEYBOARD CASE		2	2	-	-	-
14	1420453-01	1	OVERLAY, KEYBOARD		1	1	-	-	-
15	6000035-02		NAMEPLATE, I.D.		1	1	1	1	1
16	6000055-02		LABEL, CLASS "A" COMPLIANCE		1	1	1	1	1
17									
18	172-217	1	TERMINAL LUG, CRIMP, RING #6, 26/24 AWG		1	1	-	-	-
19	225-006	1	TAPE ADHESIVE, DBL SIDE, 1.00 WIDE		A/R	A/R	-	-	-
20	250-155		BUMPER, PAD, RUBBER, .140 HG, .500 DIA, WHT		4	4	4	4	4
21	283-444		SPACER, THD, 4-40, INT, EXT, STUD, .375 LG		2	2	2	2	2
22	173-104		SPACER, THD, 6-32 X .500 LG, INT. EXT.		2	-	-	-	-
23	380-002		BEZEL		1	1	-	-	-
24	475-085		SCREW, SEM I.T., PAN HD, #6-32 X .312 LG		8	-	-	-	-
25	492-032		NUT, HEX, 4-40, SMALL PATTERN		2	-	-	-	-
26	501-009		WASHER, PLAIN, #6		6	4	4	4	4
27	473-324		SCREW, SEM I.T., PAN HD., 4-40 X .250 LG		10	10	10	10	10
28		1	WIRE, STRANDED INSULATED, 24 AWG		A/R	A/R	-	-	-
29		1	SLEEVING, SHRINKABLE		A/R	A/R	-	-	-
30	501-169		WASHER, PLAIN, #4, SMALL PATTERN		12	-	-	-	-
31	502-002		WASHER, LOCK, HELICAL #4		-	-	-	-	-
32	280-006		SPACER, PLAIN, #6 X .375 LG		2	2	2	2	2
33	501-188		WASHER, PLAIN, #6, SM. PAT.		2	4	4	4	4
34	475-998		SCREW, SEMS, 6-32 X .750 LG		2	-	-	-	-
35	471-448		SCREW, PAN HD., 6-32 X 1.25 LG.			2	2	2	2
36	167-077		CONN. PART, KIT, FEMALE, SCREWLOCK ASSY.		1	-	-	-	-
37	280-009		SPACER, UNTHD, PLN., #6 X .500 LG			2	2	2	2

LM-1420180

AMPEX	Ampex Corporation REDWOOD CITY, CALIFORNIA	CODE IDENT NO. 92739	LIST OF MATERIALS	LM-1420180 SHEET 2 OF 2	REV V

ITEM NO.	PART NUMBER	DESCRIPTION	REF DESIG	QTY REQD PER DASH NUMBER -02	-03	-04	-05
38	502-025	WASHER, LOCK, INT. TOOTH, #6		2	2	2	2
39	501-751	WASHER, PLAIN, FIBER, #4		2	2	2	2
40							
41	470-476	SCREW, CAP, BUTTON HD., #4-40 X .50 LG, BLK		4	4	4	4
42	475-085	SCREW, SEMS, #6-32 X .312 LG		6	6	6	6
43							
44	501-169	WASHER, PLAIN, #4, SMALL PATTERN		10	10	10	10
45							
46							
47	1464559-02	JOYSTICK ASSY		1	1	1	1
48	1464564-01	BEZEL, JOYSTICK		1	1	1	1

NOTES:

1. PARTS USED ON SYSTEMS 1 THRU 20 ONLY.
2. STATIC SENSITIVE, SPECIAL HANDLING REQUIRED PER AMPEX STD HE1-1.

LM-1420180

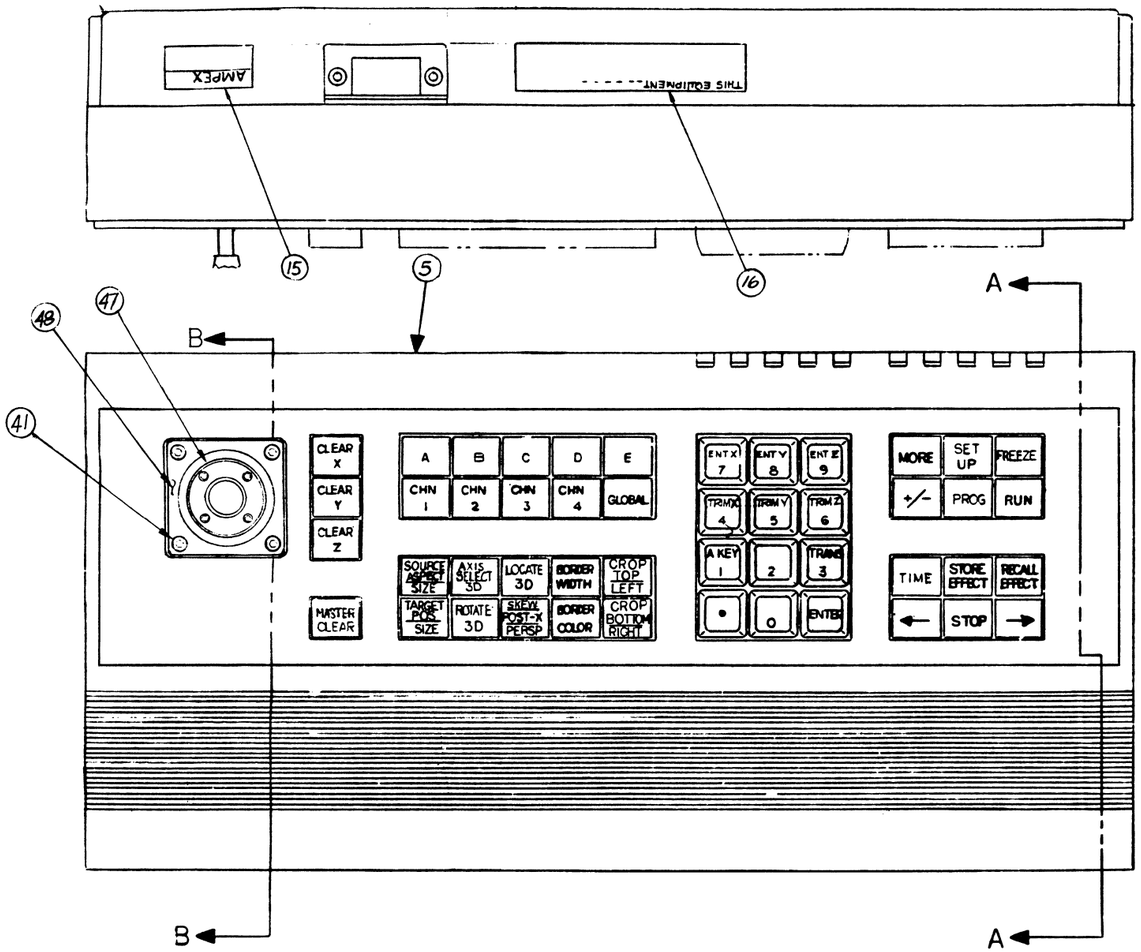

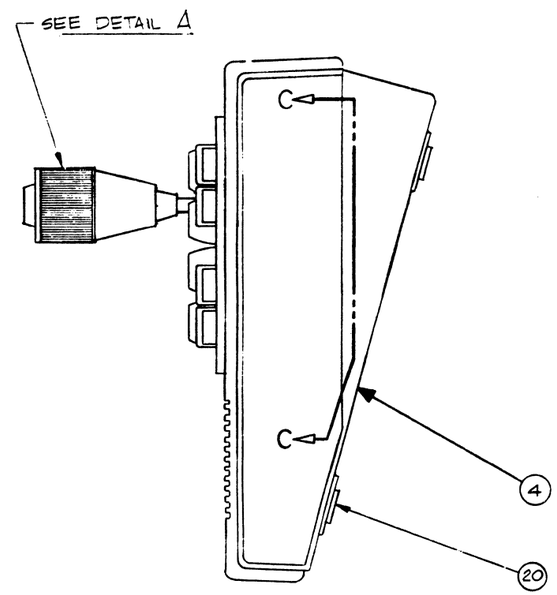

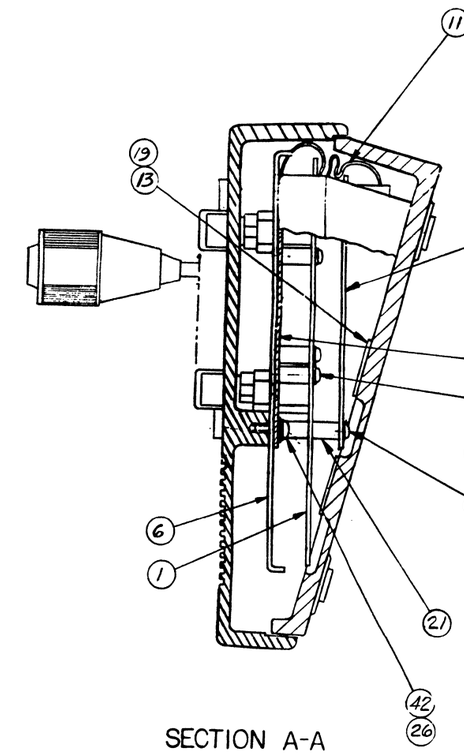

SECTION A-A

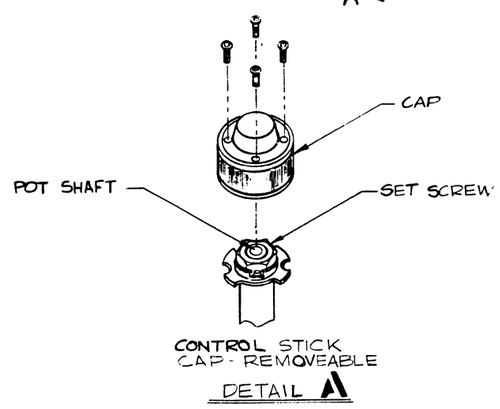

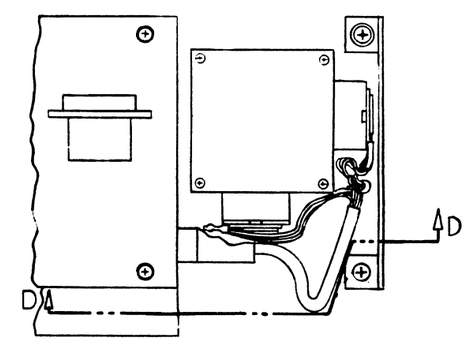

SECTION C-C

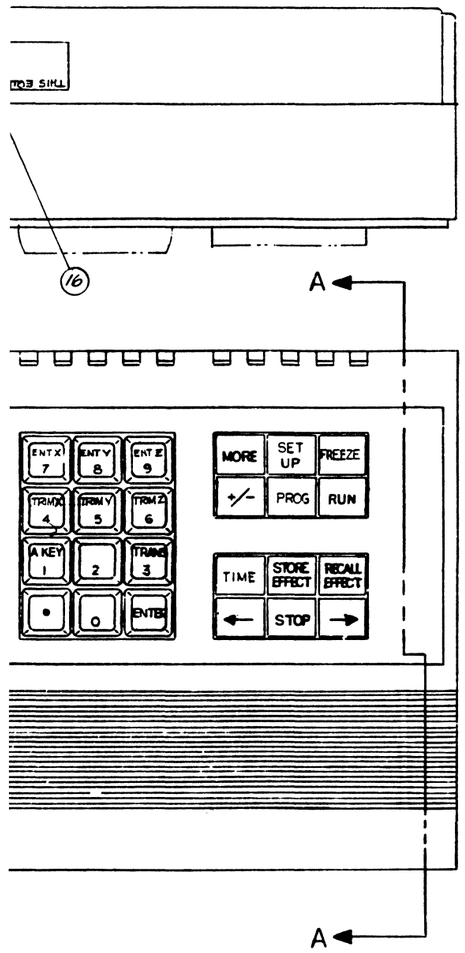

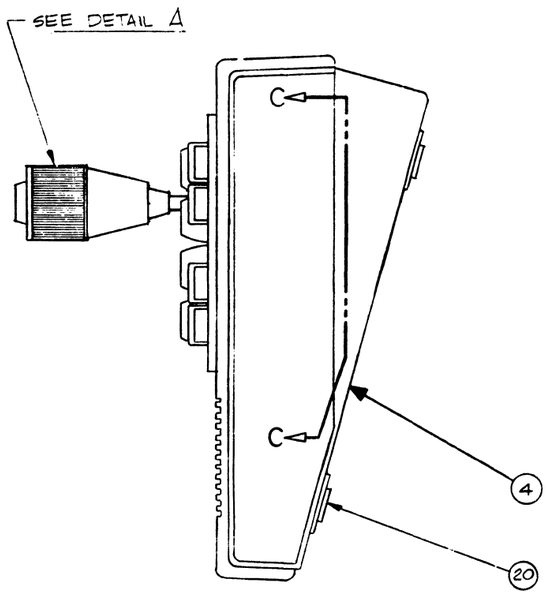

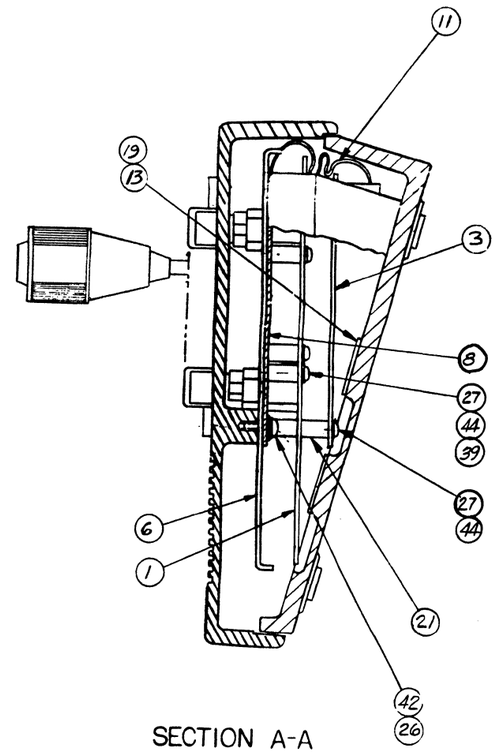

SECTION A-A

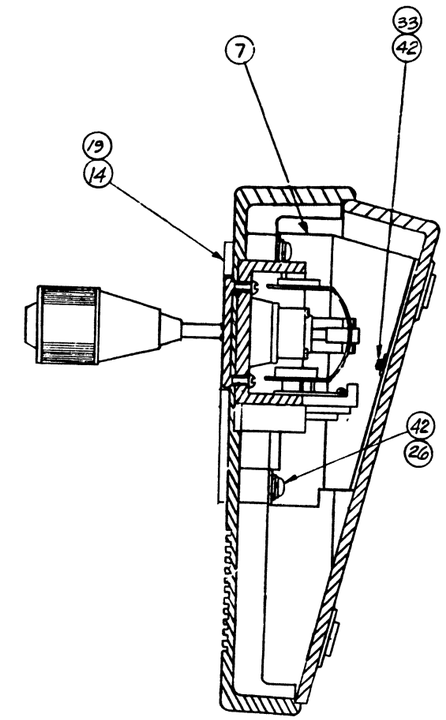

SECTION B-B

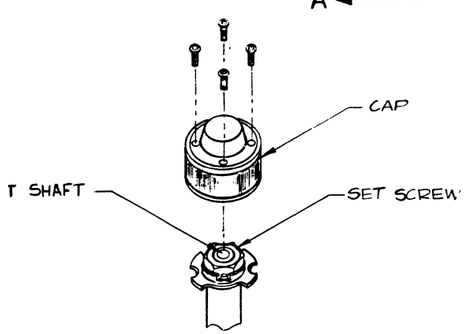

CONTROL STICK
CAP - REMOVEABLE

DETAIL A

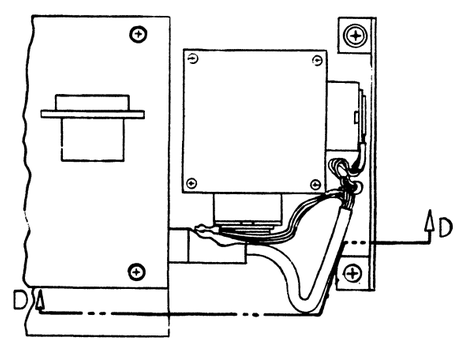

SECTION C-C

Assembly No. 1420180-05V.
Keyboard Assembly

ITEM NO.	PART NUMBER	DESCRIPTION	REF DESIG	QTY REQD PER DASH NUMBER -01	-02	-03	-04	-05
1				-01	-01	-01	-01	
2								
3	1420183	SCHEMATIC		(-)	(B)	C	E	F
4	1420131-AT	KEY CAP SET "TRIM X 4"					-	1
5	1420131-AA	KEY CAP SET, "1"	REF: S31	1	1	1	1	1
6	1420131-AB	"2"	S32	1	1	1	1	1
7	1420131-AC	"3"	S33	1	1	1	1	1
8	1420131-AD	"4"	S19	1	1	1	1	-
9	1420131-AE	"5"	S20	1	1	1	1	-
10	1420131-AF	"6"	S21	1	1	1	1	-
11	1420131-AG	"7"	S7	1	1	1	-	-
12	1420131-AH	"8"	S8	1	1	1	-	-
13	1420131-AJ	"9"	S9	1	1	1	-	-
14	1420131-AK	"CLEAR"	S43	1	-	-	-	-
15	1420131-AL	"0"	S44	1	1	1	1	1
16	1420131-AM	KEY CAP SET, "ENTER"	S45	1	1	1	1	1
17	1420131-AN	KEY CAP SET, " • "	REF: S43	-	1	1	1	1
18	1420131-AU	KEY CAP SET "TRIM Y 5"						1
19	1420374-AA	KEYBOARD PART INSERT "A"	REF: S2	-	1	1	1	1
20	1420374-AB	"B"	S3	-	1	1	1	1
21	1420374-AC	"C"	S4	-	1	1	1	1
22	1420374-AD	"D"	S5	-	1	1	1	1
23	1420374-AE	"E"	S6	-	1	1	1	1
24	1420374-AF	"GLOBAL"	S18	-	1	1	1	1
25	1420374-AG	"MORE"	S10	-	1	1	1	1
26	1420374-AH	"LOCATE 3D"	S28	-	1	1	1	1
27	1420374-AJ	" +/- "	S22	-	1	1	1	1
28	1420374-AK	"PROG"	S23	-	1	1	1	1
29	1420374-AL	"SET-UP"	S11	-	1	1	1	1
30	1420374-AM	"STOP"	S47	-	1	1	1	1
31	1420374-AN	" ← "	S46	-	1	1	1	1
32	1420374-AP	"RUN"	S24	-	1	1	1	1
33	1420374-AQ	"TIME"	S34	-	1	1	1	1
34	1420374-AR	"STORE EFFECT"	S35	-	1	1	1	1
35	1420374-AS	"RECALL EFFECT"	S36	-	1	1	1	1
36	1420374-AT	"ROTATE 3D"	S39	-	1	1	1	1
37	1420374-AV	KEYBOARD PART INSERT "AXIS SELECT 3D"	REF: S27	-	1	1	1	1

LM-1420181

AMPEX	Ampex Corporation REDWOOD CITY, CALIFORNIA	CODE IDENT NO. 92739	LIST OF MATERIALS	LM-1420181 SHEET 2 of 2	REV N

ITEM NO.	PART NUMBER	DESCRIPTION	REF DESIG	QTY REQD PER DASH NUMBER -01	-02	-03	-04	-05
38	1420374-AY	KEYBOARD PART INSERT "BORDER WIDTH" REF:	S29	-	1	1	1	1
39	1420374-AZ	"BORDER COLOR"	S41	-	1	1	1	1
40	1420374-BA	"MASTER CLEAR"	S37	-	1	1	1	1
41	1420374-BB	"CLEAR X"	S1	-	1	1	1	1
42	1420374-BC	"CLEAR Y"	S13	-	1	1	1	1
43	1420374-BD	"CLEAR Z"	S25	-	1	1	1	1
44	1420374-BE	"CHAN 1"	S14	-	1	1	1	1
45	1420374-BF	"CHAN 2"	S15	-	1	1	1	1
46	1420374-BG	"CHAN 3"	S16	-	1	1	1	1
47	1420374-BH	"CHAN 4"	S17	-	1	1	1	1
48	1420374-BJ	" → "	S48	-	1	1	1	1
49	1420374-BK	"SOURCE ASPECT/SIZE"	S26	-	1	1	1	1
50	1420374-BL	"SKEW/POST-X/PERSP"	S40	-	1	1	1	1
51	1420374-BM	"KEY BOTTOM/RIGHT"	S42	-	1	1	-	-
52	1420374-BN	"TARGET POS/SIZE"	S38	-	1	1	1	1
53	1420374-BP	"KEY TOP/LEFT"	S30	-	1	1	-	-
54	1420374-BR	KEYBOARD PART INSERT "FREEZE" REF:	S12	-	1	1	1	1
55	1420374-BS	KEYBOARD PART INSERT "CROP TOP/LEFT" REF:	S30			-	1	1
56	1420374-BT	KEYBOARD PART INSERT "CROP BOTTOM/RIGHT" REF:	S42			-	1	1
57	1440400-01	CUSTOM LENS DIFFUSER	REF: S1-6,10-18, 22-30,34-42,46-48	36	36	36	36	36
58	1440401-03	CUSTOM LENS OVERCAP	REF: S1-6,10-18, 22-30,34-42,46-48	36	36	36	36	36
59	1420178-AF	BASE, LENS	REF: S1-6,10-18, 22-30,34-42,46-48		36	36	36	36
60	064-653	CAPACITOR, CER., TUBULAR, 0.1uF, 50V, ±20%	C1-5	-	-	5	5	5
61	064-652	CAPACITOR, CER., TUBULAR, .01uF, 50V, ±20%	C1-5	5	5	-	-	-
62	135-165	HEADER ASSY, 40 PIN	J1	1	1	1	1	1
63	587-279	INTEGRATED CIRCUIT, 74LS138	U1	1	1	1	1	1
64	589-640	8279-5	U11	1	1	1	1	1
65	590-377	8255A-5	U12-14	3	3	3	3	3
66	590-950	INTEGRATED CIRCUIT, ULN-2803A	U2-10	9	9	9	9	9
67	1420131-AV	KEY CAP SET "TRIM Z 6"						1
68	066-815	RESISTOR, C.F., 300 OHMS, 1/4W, 5%	R1-36	36	36	36	36	36
69								
70	119-755	SWITCH, PUSHBUTTON, SPST-N.O.	S1-6,10-18,22-30, 34-42,46-48	36	36	36	36	36
71	119-857	SWITCH, PUSHBUTTON, SPST, 3 UNIT W/EXTENDER PLUNGER	S7-9,19-21, 31-33,43-45	4	4	4	4	4
72	119-736	SWITCH, REED	S7-9,19-21, 31-33,43-45	-	12	12	12	12
73	1420131-AP	KEY CAP SET, ENT/X	REF:S7			-	1	1
74	1420131-AR	KEY CAP SET, ENT/Y	REF:S8			-	1	1
75	1420131-AS	KEY CAP SET, ENT/Z	REF:S9			-	1	1
76	582-282	INTEGRATED CIRCUIT, MTG, HDW, SOCKET, 40 PIN	REF:U11-14	4	4	4	4	4
77	582-331	INTEGRATED CIRCUIT, MTG, HDW, SOCKET, 16 PIN	REF: U1	1	1	1	1	1
78	582-332	INTEGRATED CIRCUIT, MTG, HDW, SOCKET, 18 PIN	REF:U2-10	9	9	9	9	9
79								
80	060-449	LAMP, INCANDESCENT, T-1 3/4, BULB REF:	S1-6,10-18,22-30, 34-42,46-48	36	36	36	36	36

LM-1420184

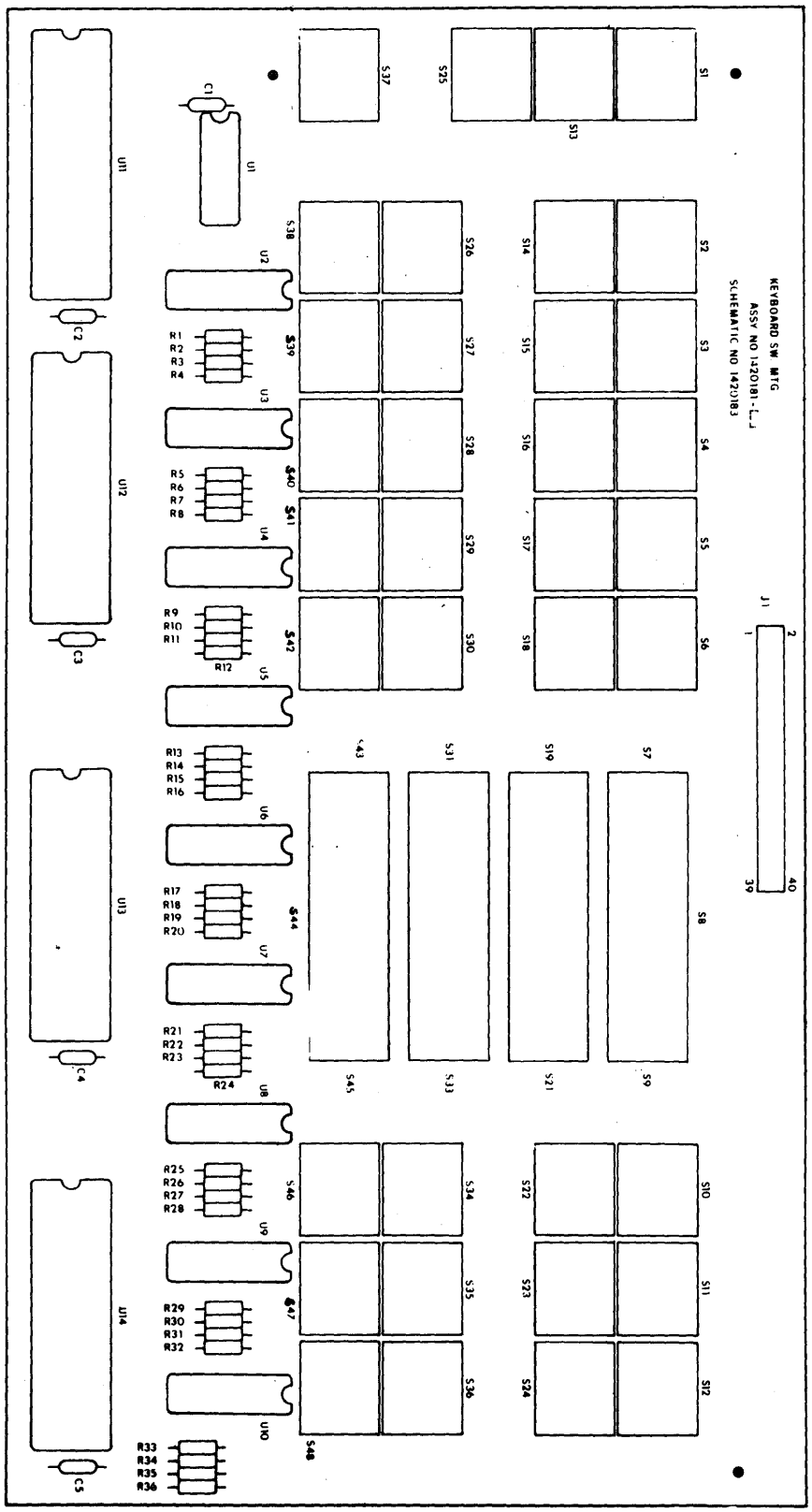

Assembly No. 1420181-05N. Keyboard Switch PWA

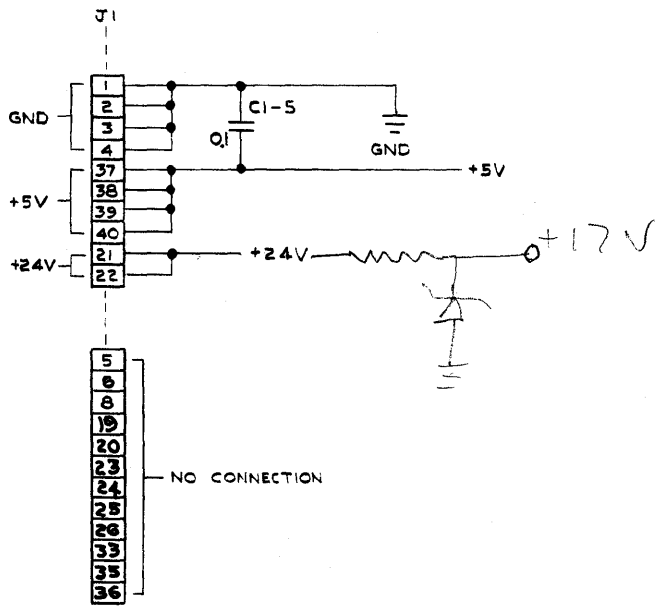

REFERENCE DESIGNATION	
LAST USED	NOT USED
C5	
R36	DS7-9, 19-21 31-33, 43-45
S48	
DS48	
U14	
J1	

NOTES: UNLESS OTHERWISE SPECIFIED

1. SCHEMATIC REFLECTS PWA 1420181-05.
2. ALL RESISTORS ARE 300 OHM, 1/4 W, 5%.
3. CAPACITANCE VALUES ARE IN MICROFARADS.

I.C. LIST				
REF. DESIG.	U1	U2-U10	U12, U13, U14	U11
AMPEX P/N	587-279	590-950	590-377	589-640
VENDOR P/N	74LS138	ULN-2803A	8255A-5	8279-5
VOLTAGE PINS	16 (+5)	–	26 (+5)	40 (+5V)
GROUND PINS	8	9	7	20

Schematic No. 1420183F. Keyboard Switch PWA (Sheet 1 of 2)

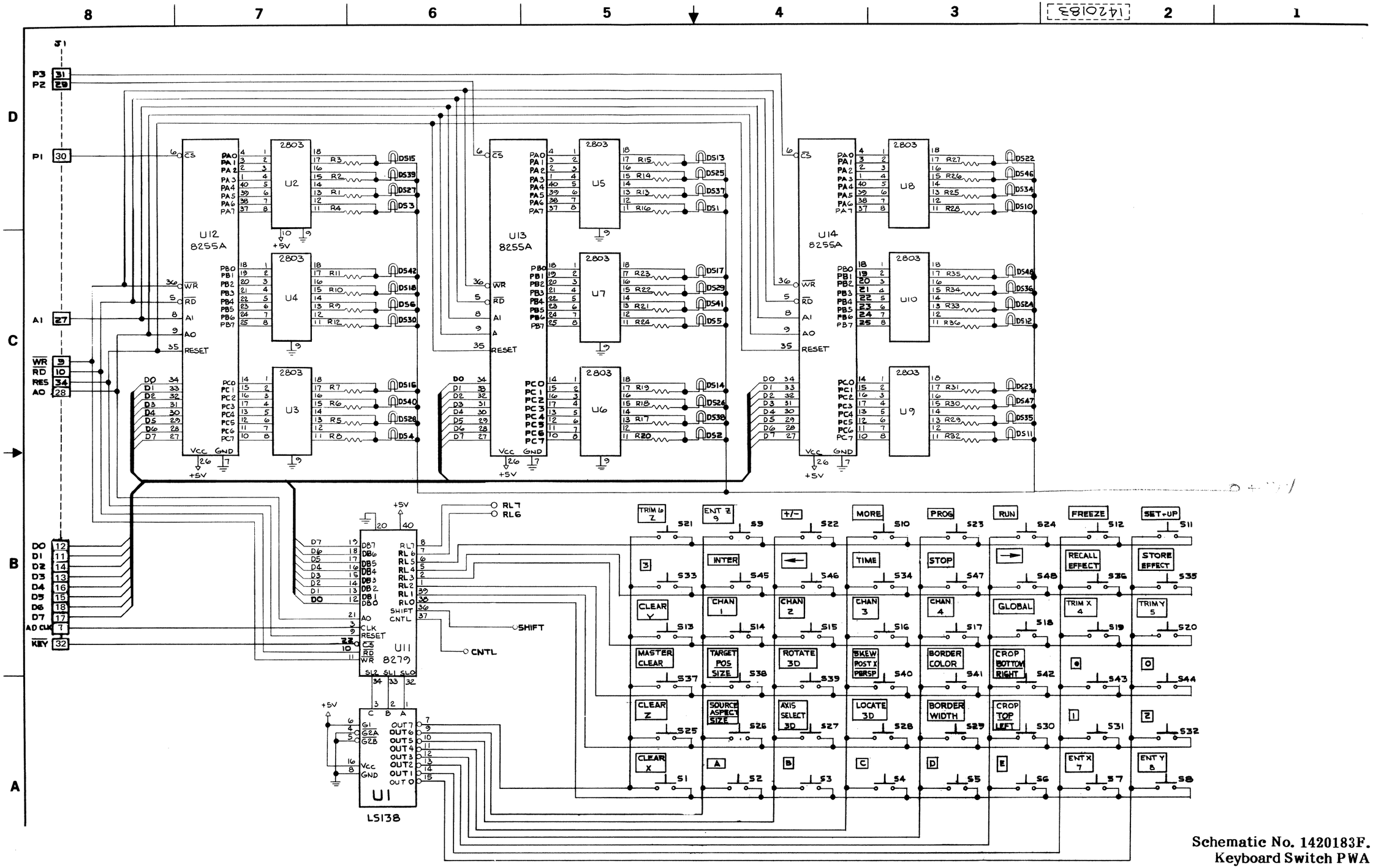

Schematic No. 1420183F.
Keyboard Switch PWA
(Sheet 2 of 2)

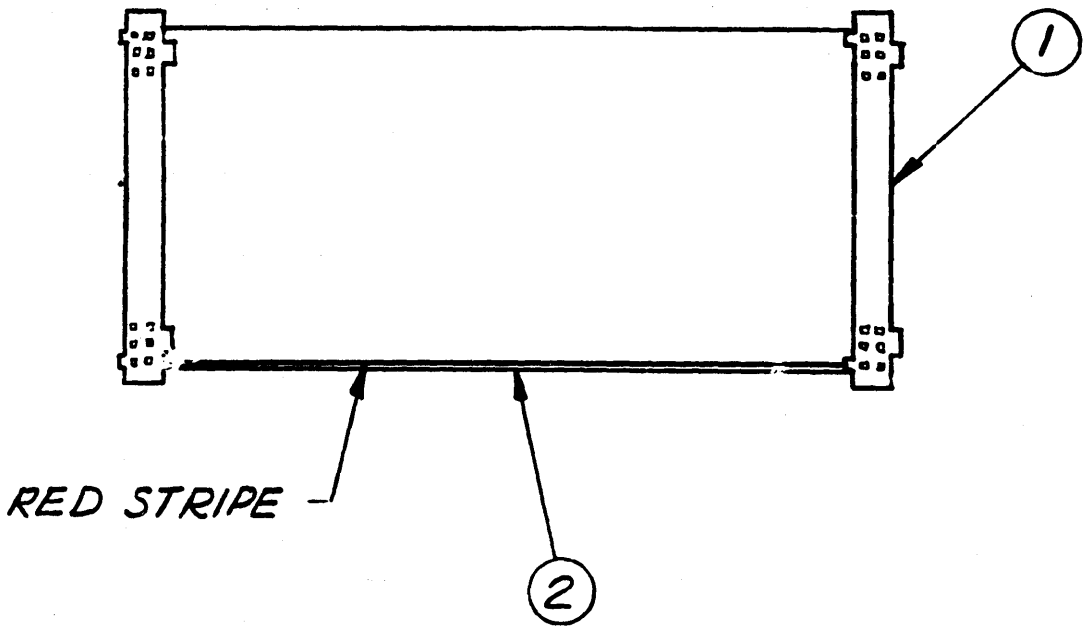

AR	2	636-017	CABLE, RIBBON		
2	1	140-462	CONNECTOR, SIGNAL CIRCUIT, FLAT CABLE		
01	ITEM NO.	PART NUMBER		DESCRIPTION	
		PARTS LIST			

Assembly No. 1420420-01B. Internal Connect Cable

ITEM NO.	PART NUMBER	DESCRIPTION	REF DESIG	QTY REQD PER DASH NUMBER -01									
1	1464559-01	JOYSTICK ASSY		1									
2	1464564-01	BEZEL, JOYSTICK		1									
3	1464801	JOYSTICK REPLACEMENT INSTRUCTIONS REV. -		1									
4													
5													
6	470-476	SCREW, CAP, BUTTON HD., #4-40 X .50 LG, BLK		4									

LM-1464800

WIRE LEAD LIST

WIRE NO	GAUGE/ COND.	FROM STA	FROM REF DES.	FROM TERM	TO STA	TO REF DES.	TO TERM	REMARKS	LM ITEM NUMBER		-01	-02
1	26/		R1	1		P3	7					
2	26/		R1	2 WIP		↑	6	X AXIS ITEM 2			6	6
3	26/		R1	3			1					
4	26/		R2	1			3					
5	26/		R2	2 WIP			8	Y AXIS ITEM 2			6	6
6	26/		R2	3			2					
7	28/2		R3	—			5					
8	28/9		R3	WIPER		↓	9	Z AXIS WIRES PROVIDED ITEM 2			2	2
9	28/6		R3	—		P3	4					

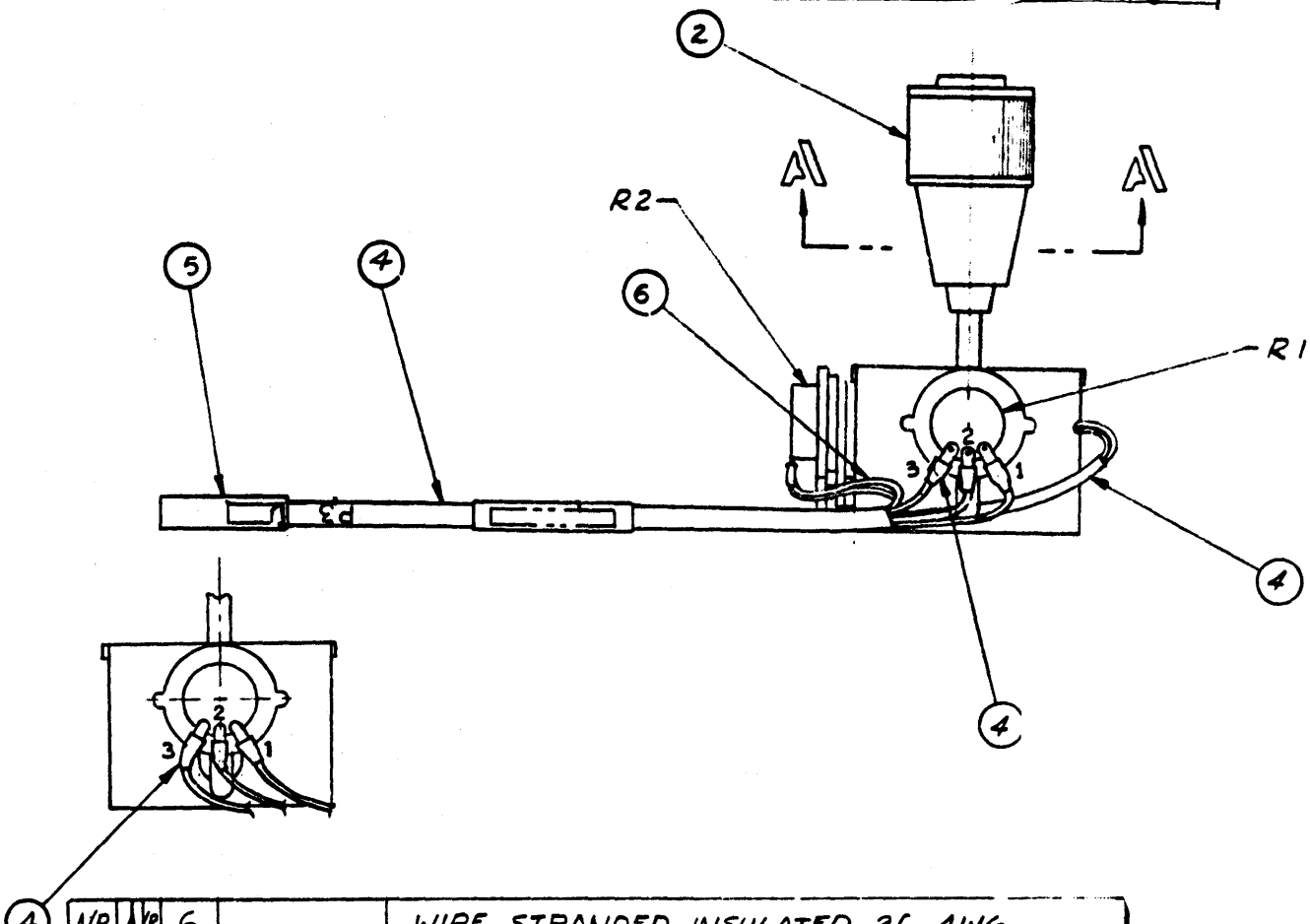

-02	-01	ITEM NO	PART NUMBER		DESCRIPTION
A/R	A/R	6			WIRE, STRANDED, INSULATED 26 AWG.
1	1	5	140-910		CONNECTOR, PLUG, 10 SOCKETS, 26-30 AWG.
A/R	A/R	4			SLEEVING, SHRINKABLE
—	A/R	3			WIRE, STRANDED, INSULATED, 24 AWG.
1	1	2	380-004		JOYSTICK
—	1	1	140-717		CONNECTOR, PLUG, 10 SOCKETS

Assembly No. 1464559-02B. Joystick Assembly

ITEM NO.	PART NUMBER	DESCRIPTION	REF DESIG	QTY REQD PER DASH NUMBER -01	-02	-03	-04	-05	-06	-07	-08	-09	-10
1													
2													
3	1420186	SCHEMATIC		S	T	U	V	H	J	K	L	P	S
4													
5	1465021-01	PROM ASSEMBLY, KEYBOARD, CPU 1	U5		1	1	1						
6													
7													
8													
9	064-314	CAPACITOR, CERAMIC, MONO., 1 uF, 50V, ±20%	C9,14,24	-	-	-	-	3	3	3	-	-	-
10	064-314	CAPACITOR, CERAMIC, MONO, 1uF, 50V, ±20%	C9,14,24,32	4	4	4	4			-	4	4	4
11	064-652	CAPACITOR, CERAMIC, TUBULAR, .01 uF, 50V, ±20%	C3-8,11-13, 17-21,23, 25-31,33	-	-	-	-	23	23	23	-	-	-
12	064-319	CAPACITOR, CERAMIC, MONO, 4.7uF, 50V, ±20%	C34	-	-	-	-	1	1	1	1	-	-
13	064-653	CAPACITOR, CER., TUBULAR, 0.1uF, 50V, ±20%	C3,4 6-8,11,12, 17-21,23,25-31, 33,36-38	24	24	24	24			-	23	21	24
14													
15													
16	034-222	CAPACITOR, MICA, 100pF, 500V, ±1%	C22	1	1	1	1	1	1	1	1	1	1
17	034-919	CAPACITOR, MICA, 270pF, 500V, ±1%	C15,16	2	2	2	2	2	2	2	2	2	2
18													
19	055-166	CAPACITOR, MYLAR, .001uF, 50V, ±5%	C35	1	1	1	1			-	1	1	1
20													
21	055-638	CAPACITOR, POLY, .01uF, 100V, ±1%	C32	-	-	-	-	1	1	1	-	-	-
22	037-892	CAPACITOR, TANT, 47uF, 20V, ±20%	C5	1	1	1	1			-	1	1	1
23	037-954	CAPACITOR, TANT, 22uF, 15V, ±20%	C13	1	1	1	1			-	1	1	1
24	037-933	CAPACITOR, TANT., 10 uF, 35V, ± 20%	C10	1	1	1	1	1	1	1	1	1	1
25	037-965	CAPACITOR, TANT., 120uF, 10V, ±20%	C2	1	1	1	1	1	1	1	1	1	1
26	037-940	CAPACITOR, TANT, 47 uF, 35V, ±20%	C1	1	1	1	1	1	1	1	1	1	1
27	037-962	CAPACITOR, TANT, 4.7uF, 10V, ±20%	C34	1	1	1	1				-	1	1
28	140-716	CONNECTOR, SIGNAL CIRCUIT, PLUG, 15 PINS	J2	1	1	1	1	1	1	1	1	1	1
29													
30	017-232	CRYSTAL UNIT, QUARTZ 4.9152 MHZ	Y1	1	1	1	1	1	1	1	1	1	1
31													
32	013-599	DIODE, SWITCHING, CD458	CR1	1	1	1	1	1	1	1	1	1	1
33													
34	135-104	HEADER ASSY, RT ANGLE, 10 POSTS	J3	1	1	1	1	1	1	1	1	1	1
35	135-165	HEADER ASSY, 40 POSTS	J1	1	1	1	1	1	1	1	1	1	1
36													

LM-1420184

AMPEX | Ampex Corporation REDWOOD CITY, CALIFORNIA | CODE IDENT NO. 92739 | LIST OF MATERIALS | LM-1420184 SHEET 2 OF 3 | REV A.B

ITEM NO.	PART NUMBER	DESCRIPTION	REF DESIG	QTY REQD PER DASH NUMBER -11	-12	-13	-14	-05	-06	-07	-08	-09	-10
37	000-003	INTEGRATED CIRCUIT, ADC0808 (1)	U15	1	1	1	1	1	1	1	1	1	1
38	000-012	Z8470 (1)	U2	1	1	1	1	1	1	1	1	1	1
39	586-807	MC4024	U24	1	1	1	1	1	1	1	1	1	1
40	587-076	LM309H	U14	1	1	1	1	1	1	1	1	1	1
41	589-823	74LS138	U19,20	2	2	2	2	2	2	2	2	2	2
42	589-820	74LS74	U13	-	-	-	-	1	1	1	-	-	-
43	590-328	74LS32	U18	1	1	1	1	1	1	1	1	1	1
44	589-814	74LS04	U12	-	-	-	-	1	1	1	-	-	-
45	589-815	74LS08	U17	1	1	1	1	1	1	1	1	1	1
46	589-934	74LS221	U10	-	-	-	-	-	-	-	-	-	-
47	590-332	74LS02	U16	1	1	1	1	1	1	1	1	1	1
48	590-333	74LS163	U9	1	1	1	1	1	1	1	1	1	1
49	590-584	74LS244	U6,7,22,23	4	4	4	4	4	4	4	4	4	4
50	590-847	74LS245	U21	1	1	1	1	1	1	1	1	1	1
51	589-619	Z8400 (Z80A) (1)	U8	1	1	1	1	1	1	1	1	1	1
52	1420470-01	TMS25L32-45JL (1)	U5	1	-	-	-	1	1	1	1	1	1
53	590-193	9637ATC	U1	1	1	1	1	1	1	1	1	1	1
54	590-194	DS3692N	U11	1	1	1	1	1	1	1	1	1	1
55	590-983	INTEGRATED CIRCUIT, TMM2016P (1)	U3	1	1	1	1	1	1	1	1	1	1
56	590-329	INTEGRATED CIRCUIT, 74LS123	U10	1	1	1	1	1	1	1	1	1	1
57	589-545	INTEGRATED CIRCUIT, 7474	U13	1	1	1	1			-	1	1	1
58	590-609	INTEGRATED CIRCUIT, 7404	U12	1	1	1	1			-	1	1	1
59	066-662	RESISTOR, C.F., 200 OHMS, 1/4W, 5%	R22	1	1	1	1	1	1	1	1	1	1
60	066-663	220	R15	1	1	1	1	1	1	1	1	1	1
61	066-665	1K	R21	1	1	1	1	1	1	1	1	1	1
62	066-668	4.7K	R5,6,12,14	-	-	-	-	-	-	-	-	-	-
63	066-717	47K	R7	1	1	1	1	1	1	1	1	1	1
64	066-826	2K	R18	-	-	-	-	-	-	-	-	-	-
65	066-830	10K	R9,10,16,17	4	4	4	4	4	4	4	4	4	4
66	066-842	5.1K	R1,2	2	2	2	2	2	2	2	2	2	2
67	076-004	180	R3	1	1	1	1	1	1	1	1	1	1
68	076-039	RESISTOR, C.F., 20 OHMS, 1/4W, 5%	R4,11,13	3	3	3	3	3	3	3	3	3	3
69	066-668	RESISTOR, C.F., 4.7K OHMS, 1/4W, 5%	R5,6,12,14 18	5	5	5	5	5	5	5	5	5	5
70	066-850	RESISTOR, C.F., 240K OHMS, 1/4W, 5%	R25	1	1	1	1	1	1	1	1	1	1
71	062-964	RESISTOR, M.F., 4.53K OHMS, 1/8W, 1%	R23	1	1	1	1	1	1	1	1	1	1
72	062-972	RESISTOR, M.F., 5.62K OHMS, 1/8W, 1%	R24	1	1	1	1	1	1	1	1	1	1
73													
74	058-611	RESISTOR, VAR., 10K OHMS, 1/2W, 20%	R19,20	2	2	2	2	2	2	2	2	2	2
75	066-818	RESISTOR, C.F., 470 OHMS, 1/4W, 5%	R26	1	1	1	1			-	1	1	1
76													
77													
78	014-781	TRANSISTOR, SILICON, PNP, MPS6518	Q1	1	1	1	1	1	1	1	1	1	1
79													
80													
81	167-077	CONNECTOR, PART KIT, FEMALE SCREWLOCK ASSY	REF: J2	1	1	1	1	1	1	1	1	1	1

LM-1420184

AMPEX | Ampex Corporation REDWOOD CITY, CALIFORNIA | CODE IDENT NO. 92739 | LIST OF MATERIALS | LM-1420184 SHEET 3 OF 3 | REV A.B

ITEM NO.	PART NUMBER	DESCRIPTION	REF DESIG	QTY REQD PER DASH NUMBER -11	-12	-13	-14	-05	-06	-07	-08	-09	-10
82													
83	302-395	STRAP, CABLE, MOUSE TAIL	REF: Y1	1	1	1	1	1	1	1	1	1	1
84													
85	582-333	I.C. MTG HDW, SOCKET, 20 PINS	REF: U6,7,21-23	5	5	5	5	5	5	5	5	5	5
86	582-329	8	REF: U1	1	1	1	1	1	1	1	1	1	1
87	582-330	14	REF: U12,13, 16-18,24	6	6	6	6	6	6	6	6	6	6
88	582-280	24	REF: U3-5	3	3	3	3	3	3	3	3	3	3
89	582-281	28	REF: U15	1	1	1	1	1	1	1	1	1	1
90	582-282	40	REF: U2,8	2	2	2	2	2	2	2	2	2	2
91													
92	582-331	I.C. MTG HDW, SOCKET, 16 PINS	REF: U9-11,19,20	5	5	5	5	5	5	5	5	5	5
93													
94													
95	602-044	SHORTING PLUG, RED	J4	1	1	1	1		-	1	1	1	1
96													
97	143-981	CONN, SIGNAL CKT., JACK, P.C. TIP	REF:J4-A,B,C	3	3	3	3		-	3	3	3	3
98													
99													
100	471-062	SCREW, PAN HD., X-REC, 4-40 X .375 LG		2	2	2	2	2	2	2	2	2	2
101													
102													
103													
104													
105	492-032	NUT, HEX, SM. PATTERN, 4-40 UNC-28		2	2	2	2	2	2	2	2	2	2
106													
107	502-403	WASHER, PLAIN, NYLON, #4		4	4	4	4	4	4	4	4	4	4
108	501-624	WASHER, PLAIN, BRASS, #4		2	2	2	2	2	2	2	2	2	2
109													
110													
111													
112	615-002	WIRE, SOLID, UNINSULATED, 22 AWG	REF: U1-6 TO R2	-	-	-	-	-	-	-	-	-	-
113													
114	580-684	TRANSISTOR MTG. HDW., INSULATOR	REF: U14	1	1	1	1	1	1	1	1	1	1

NOTES:

1 STATIC SENSITIVE, SPECIAL HANDLING REQUIRED PER AMPEX STD ME1-1.

LM-1420184

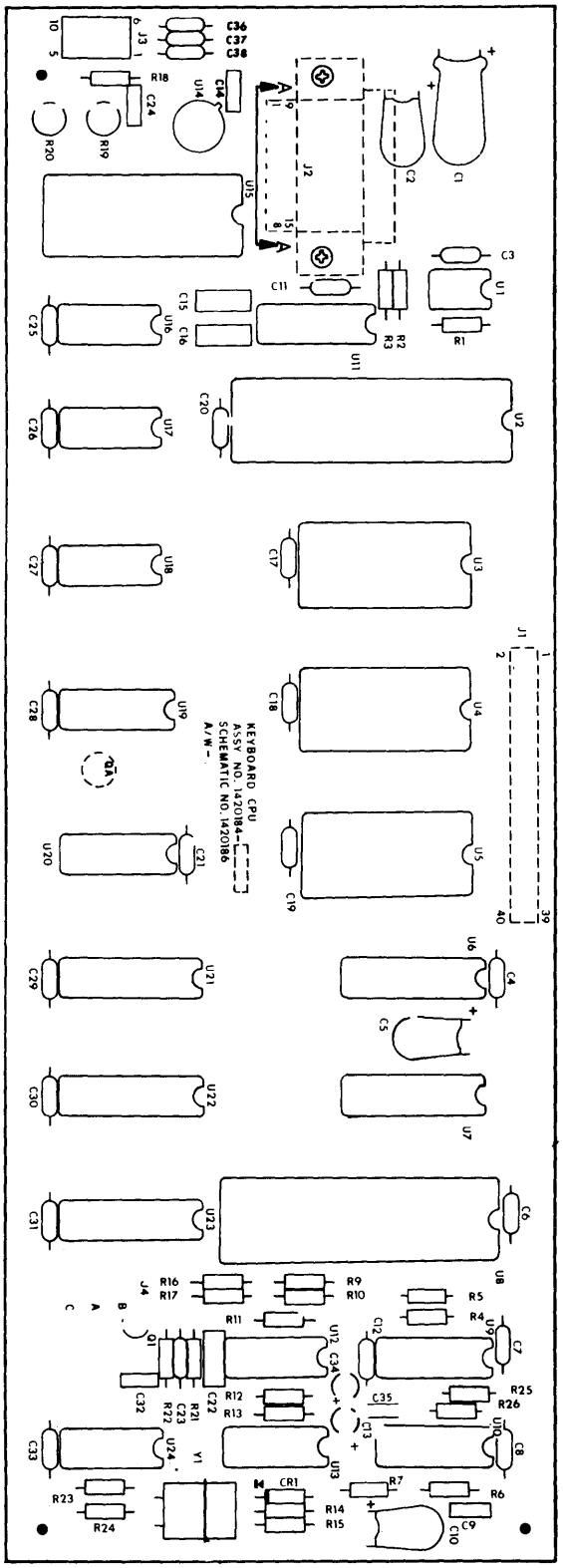

Assembly No. 1420184-14AB. CPU Keyboard PWA

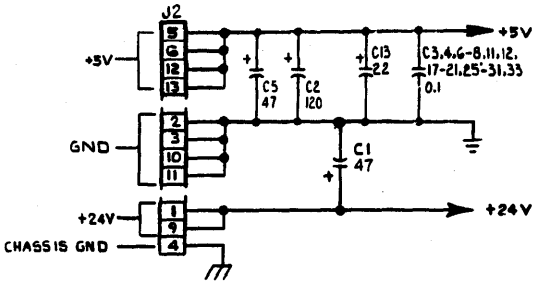

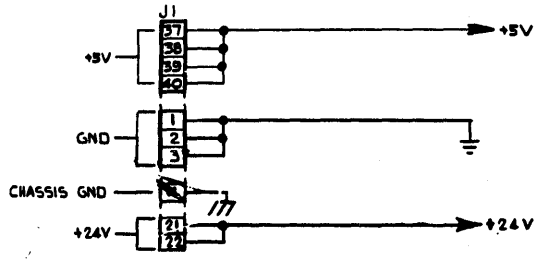

NOTES: UNLESS OTHERWISE SPECIFIED

1. RESISTANCE VALUES ARE IN OHMS, 1/4W, 5%.
2. CAPACITANCE VALUES ARE IN MICROFARADS.
3. SHOWN FOR REFERENCE ONLY. BOARD WILL ACCOMODATE A 25L32 PROGRAMMABLE I.C.; NOT REQUIRED FOR CURRENT APPLICATION.
4. STATIC SENSITIVE, SPECIAL HANDLING REQD PER AMPEX STD HEI-1.
5. Schematic reflects PWA 1420184-14.

REFERENCE DESIGNATION	
LAST USED	NOT USED
C38	
CR1	
E2	
J4	
Q1	
R26	R8
U24	U4
Y1	

I.C. LIST

REF. DESIGNATION	U16	U12	U17	U13	U19, U20	U5	U10	U6, U7, U8	U21	U9 3>
AMPEX P/N	590-332	589-814	589-815	589-820	589-823	590-373	590-322	590-384	590-847	1445021-2
VENDOR P/N	74LS02	74LS04	74LS08	74LS74	74LS138	74LS163	74LS123	74LS244	74LS245	74LS251 32
VOLTAGE PINS	14 (+5)	14 (+5)	14 (+5)	14 (+5)	16 (+5)	16 (+5)	16 (+5)	20 (+5)	20 (+5)	24 (+5)
GROUND PINS	7	7	7	7	8	8	8	10	10	12

I.C. LIST

REF. DESIGNATION	U11	U1	U15 4>	U8 4>	U3 4>	U2 4>	U24	U14	U18
AMPEX P/N	590-194	590-193	000-003	589-619	590-983	000-012	586-807	587-076	590-328
VENDOR P/N	3692	9637A	ADC0808	Z8400	TMM2016P	Z8470	4024	LM309H	74LS32
VOLTAGE PINS	1 (+5)	1 (+5)	11 (+5 REG)	11	24 (+5)	9 (+5)	14 (+5)	1 (+24)	14 (+5)
GROUND PINS	5	4	13	29	12	31	7	3	7

Schematic No. 1420186V. CPU Keyboard PWA

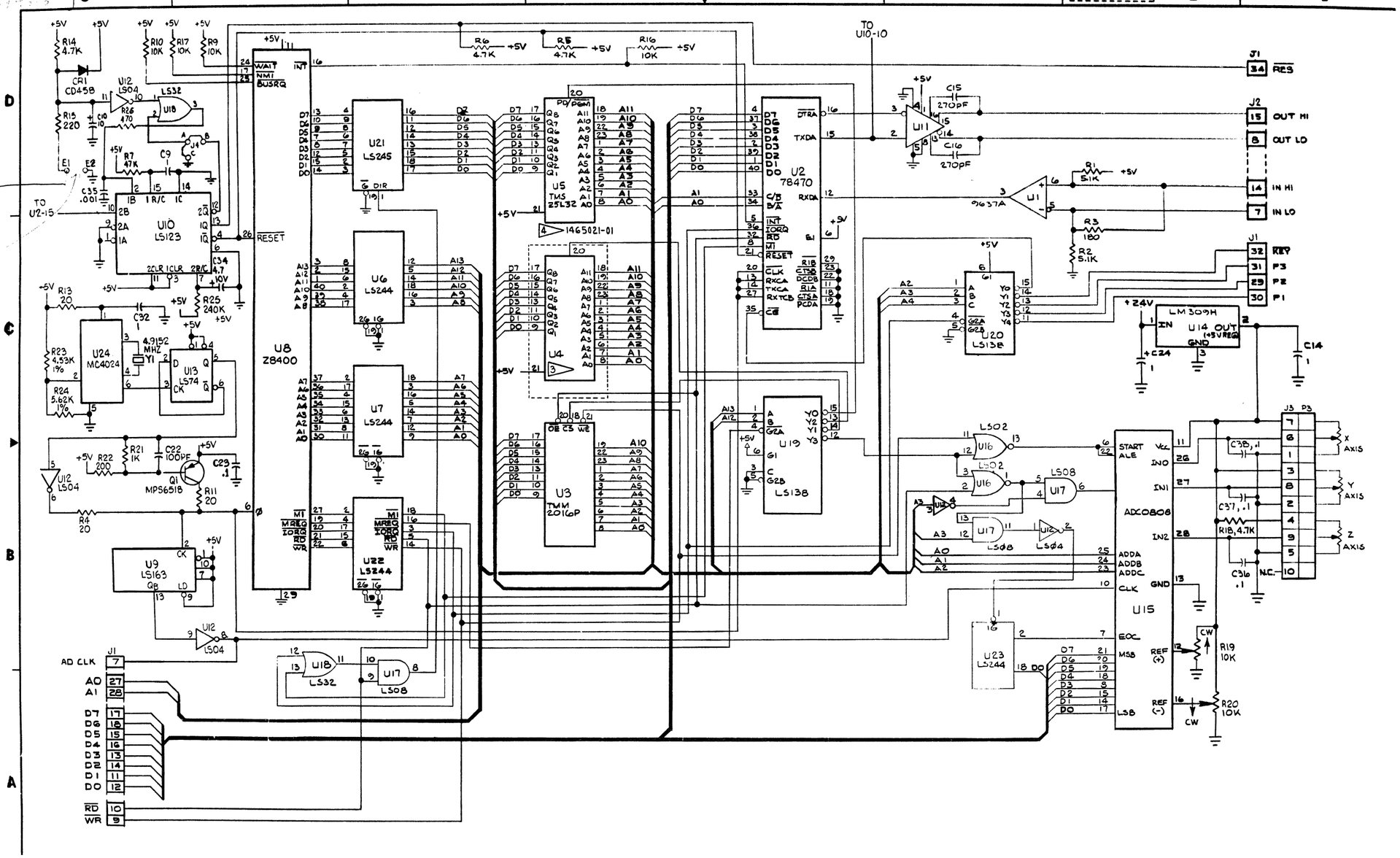

Schematic No. 1420186V.
CPU Keyboard PWA
(Sheet 2 of 2)

ITEM NO.	PART NUMBER	DESCRIPTION	REF DESIG	QTY REQD PER DASH NUMBER -01									
1	1420220-03	BASE		1									
2	1420450-02	COVER ASSEMBLY		1									
3	1464352-01	LABEL, SOFTWARE IDENTIFICATION		1									
4	1465093-02	120V MONITOR CHASSIS ASSEMBLY		1									
5	6000035-02	NAME PLATE, I.D.		1									
6	6000055-02	LABEL, CLASS "A", COMPLIANCE		1									
7													
8	250-155	BUMPER PAD, RUBBER, .140 HT, .500 DIA		4									
9	310-291	SCREW, ASSY PART, CAPTIVE		4									
10	470-471	SCREW, CAP, BUTTON HD, BLK, 4-40 X .312 LG		4									
11	502-481	WASHER, RETAINING, SPLIT		4									

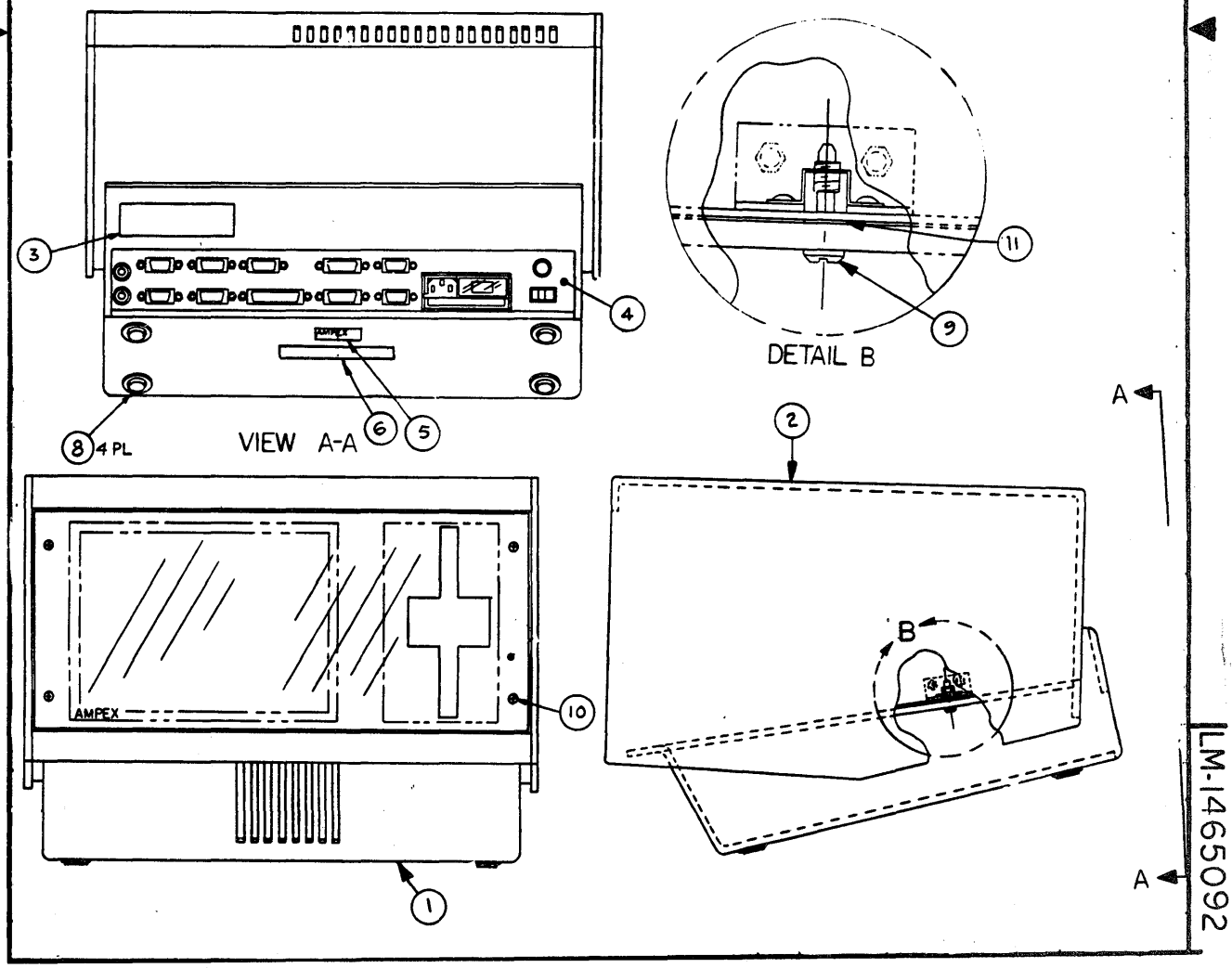

ITEM NO.	PART NUMBER	DESCRIPTION	REF DESIG	QTY REQD PER DASH NUMBER -01									
1	1420220-03	BASE		1									
2	1420450-02	COVER ASSEMBLY		1									
3	1464352-01	LABEL, SOFTWARE IDENTIFICATION		1									
4	1465096-02	230V MONITOR CHASSIS ASSEMBLY		1									
5	6000035-02	NAME PLATE, I.D.		1									
6	6000055-02	LABEL, CLASS "A", COMPLIANCE		1									
7													
8	250-155	BUMPER PAD, RUBBER, .140 HT, .500 DIA		4									
9	310-291	SCREW, ASSY PART, CAPTIVE		4									
10	470-471	SCREW, CAP, BUTTON HD, BLK, 4-40 X .312 LG		4									
11	502-481	WASHER, RETAINING, SPLIT		4									

LM-1465095

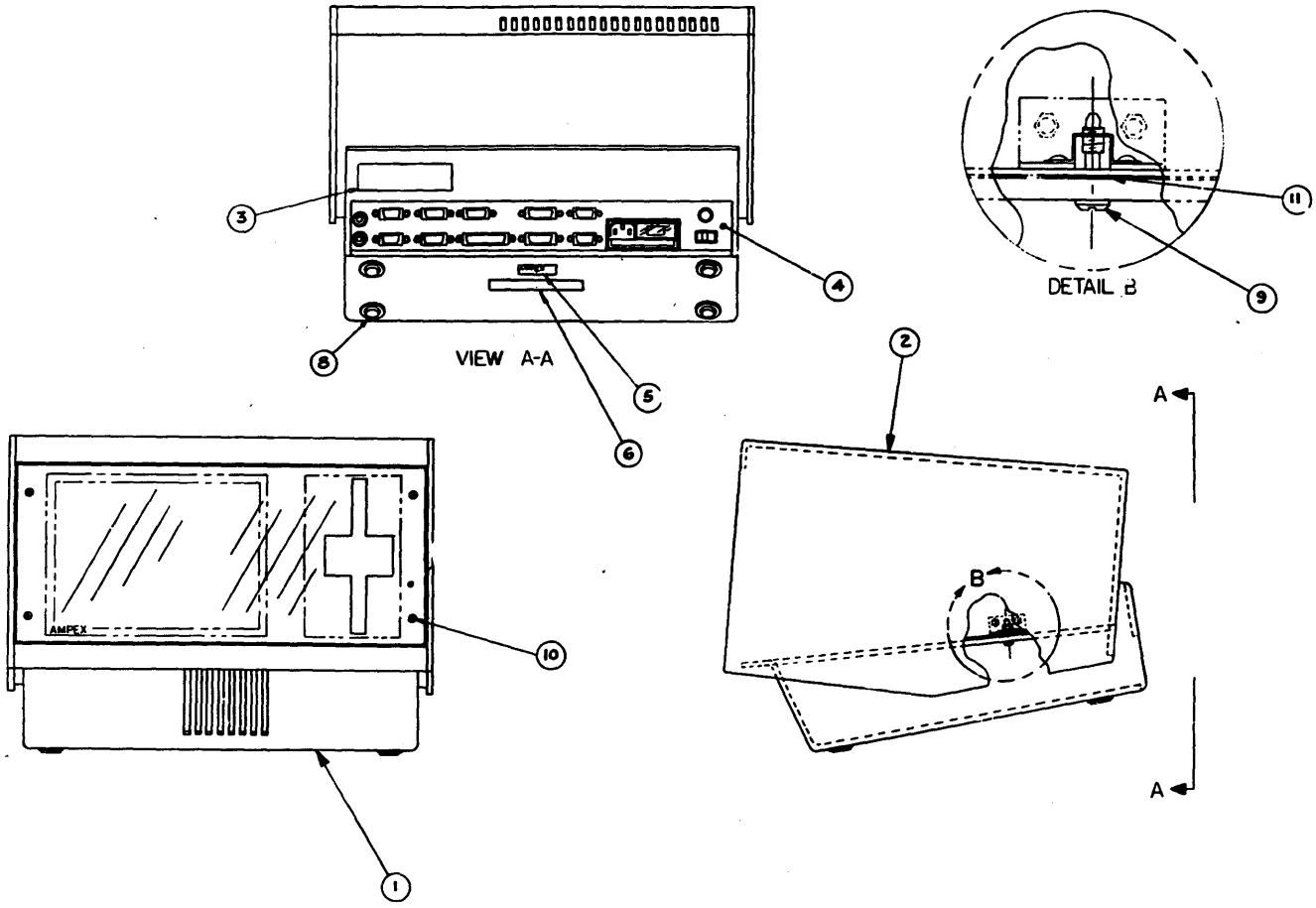

Assembly No. 1465095-01A. 230V Monitor Housing Assembly

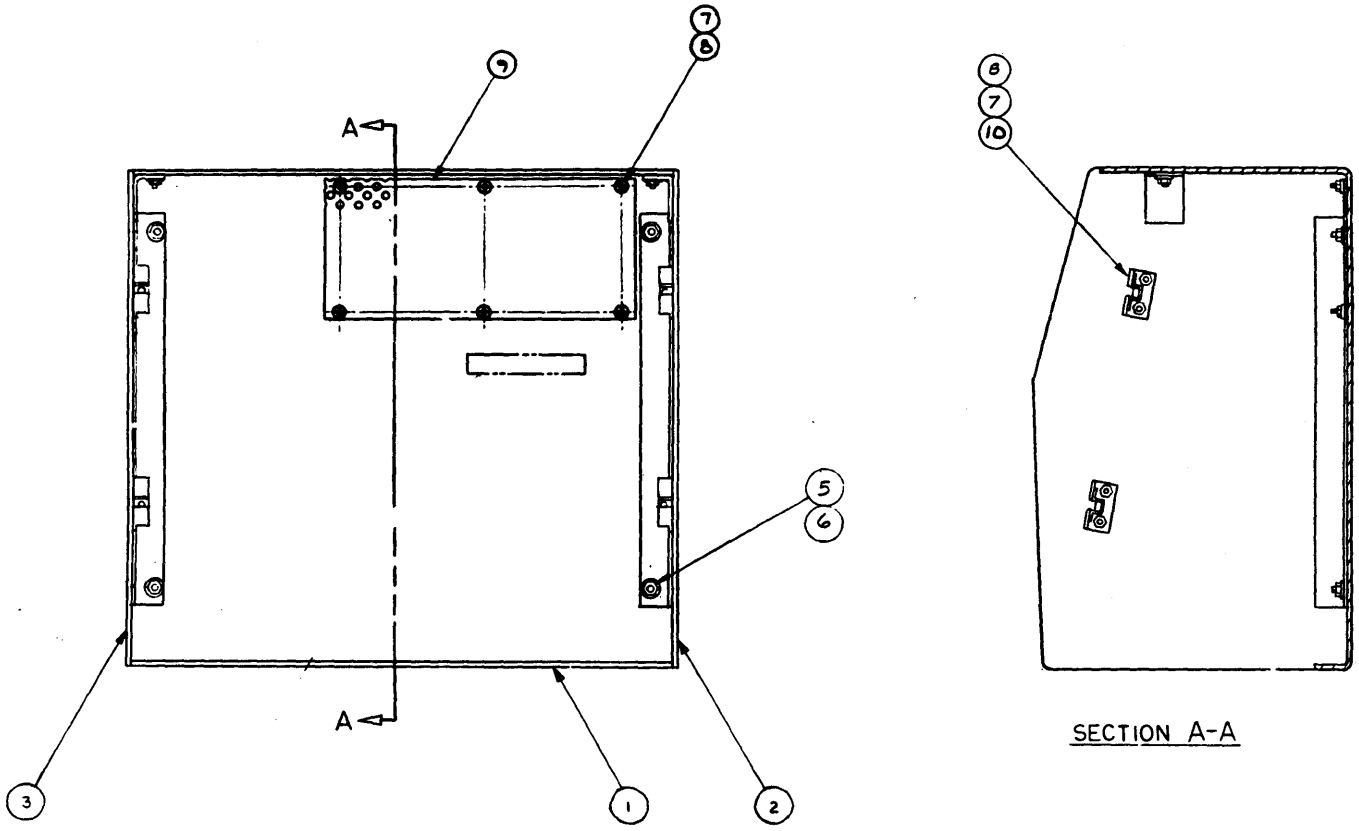

4			10	1420238-02	LATCH, COVER
1			9	1464534-01	SCREEN, SHROUD
14	8		8	501-008	WASHER, PLAIN #4
14	8		7	496-004	NUT, LOCKING, HEX, ASSEMBLED #4-40
6	6		6	501-009	WASHER, PLAIN #6
6	6		5	496-005	NUT, LOCKING, HEX, 6-32
-	4		4	1420238-01	LATCH, COVER
1	1		3	1420449-AB	PLATE, SIDE
1	1		2	1420449-AA	PLATE, SIDE
1	1		1	1420464-01	SHROUD
-02	01		ITEM NO.	PART NUMBER	DESCRIPTION

PARTS LIST

Assembly No. 1420450-02G. Cover Assembly

ITEM NO.	PART NUMBER	DESCRIPTION	REF DESIG	QTY REQD PER DASH NUMBER -01	-02
1	1403328-AB	LABEL, WARNING		1	1
2	1420207-01	VIDEO OUT CABLE ASSEMBLY		1	1
3	1420208-01	REMOTE CABLE ASSEMBLY		1	1
4	1420223-04	BEZEL		1	1
5	1420236-02	BRACKET, POWER SUPPLY		1	1
6	1420242-02	BRACKET, BEZEL		2	2
7	1420258-05	PWA, CONTROL INTERFACE		1	1
8	1420431-01	RFI FILTER	FL1	1	1
9	1420433-01	AC CABLE ASSEMBLY		1	1
10	1420434-01	DC POWER HARNESS		1	1
11	1420435-01	AC FAN CORD		1	1
12	1420436-01	CRT CABLE		1	1
13	1420437-01	SIGNAL INTERCONNECT CABLE ASSEMBLY, RIBBON		2	2
14	1420439-01	CONTROL PROC CABLE		1	1
15	1420440-01	I/O BOARD CABLE		1	1
16	1420451-03	CHASSIS		1	-
17	1420456-01	INSULATOR, CU CHASSIS		1	1
18	1420471-05	PWA, I/O		1	1
19	1420477-02	CRT, MONITOR MODIFICATION ASSEMBLY		1	1
20	1464512-01	PWA, CONTROL PROCESSOR		1	1
21	1465155-01	CHASSIS		1	1
22					
23					
24	013-887	DIODE, ZENER, 6.8V	VR1	1	1
25					
26	018-458	ADHESIVE, LOCTITE 222		AR	AR
27					
28	070-004	FUSE, SLO BLOW, 1A, 250V	F1	1	1
29					
30	087-388	HEATSINK, COMPOUND		AR	-
31					
32	167-077	CONN. PART KIT, SCREW LOCK ASSY., FEMALE #4-40		10	10
33	180-208	TERMINAL STRIP, BARRIER, 5 TERM	TB2	1	1
34					
35	260-052	GROMMET, CATERPILLAR		AR	AR
36					
37					

LM-1465093

AMPEX	Ampex Corporation Redwood City, California	CODE IDENT NO. 92739	LIST OF MATERIALS	LM-1465093 SHEET 2 OF 2	REV B

ITEM NO.	PART NUMBER	DESCRIPTION	REF DESIG	QTY REQD PER DASH NUMBER -01	-02
38	280-107	SPACER, THD, HEX, #4-40 X .750 LG		2	2
39	280-543	SPACER, PLAIN, #4 X .188 LG		2	2
40	283-271	SPACER, THD STUD, INT., EXT., #6-32 X .750 LG		4	4
41	283-467	SPACER, THD., #6-32 X .625 LG, NYLON		4	4
42					
43	302-160	CLAMP, CABLE, NYLON, .250 ID		1	1
44	302-335	STRAP, CABLE		AR	AR
45					
46	471-330	SCREW, FLAT HD., #4-40 X .500 LG		2	2
47	471-345	SCREW, FLAT HD., #6-32 X .375 LG		2	2
48	473-269	SCREW. PAN HD., SEM, #6-32 X .312 LG		12	12
49	473-324	SCREW, PAN HD., SEM, #4-40 X .250 LG		4	4
50	473-734	SCREW, PAN HD., SEM, #8-32 X .375 LG		13	13
51					
52	492-032	NUT, HEX, #4		2	2
53	496-005	NUT, W/LOCK WASHER, #6-32		6	6
54	496-006	NUT, W/LOCK WASHER, #8-32		2	2
55	498-434	NUT, HEX, FINISHED, #10-32		1	1
56					
57	501-009	WASHER, PLAIN, #6		8	8
58	501-169	WASHER. PLAIN, #4		4	4
59	501-186	WASHER, PLAIN, #4		20	20
60	501-204	WASHER, SHIM, .250 ID, .438 OD		1	1
61	501-205	WASHER, PLAIN, #8		12	12
62	501-230	WASHER, PLAIN, #10		1	1
63	502-003	WASHER, LOCK, HELICAL, #6		2	2
64	502-024	WASHER, LOCK, #4, INT TOOTH		2	2
65	502-033	WASHER, LOCK, #10, INT TOOTH		1	1
66	506-140	WASHER, D		1	1
67					
68	570-582	POWER SUPPLY, SWITCHER, 4 OUTPUTS		1	1
69					
70	582-172	TRANSISTOR, MTG. HDW., TERMINAL LUG, #10 STUD		1	1
71	582-179	TRANSISTOR, MTG. HDW., INSUL., MICA		2	-
72	582-180	TRANSISTOR, MTG. HDW., BUSING, INSUL., TEFLON		1	1
73	582-389	DIODE MTG HDW. INSULATOR RUBBER REF:VR1			2
74	591-312	FAN UNIT, 23/27 CFM, 115 VAC		1	1
75					
76		SLEEVING, PVC, FLEXIBLE		AR	AR
77		WIRE, STRANDED, INSULATED, 18 AWG		AR	AR

LM-1465093

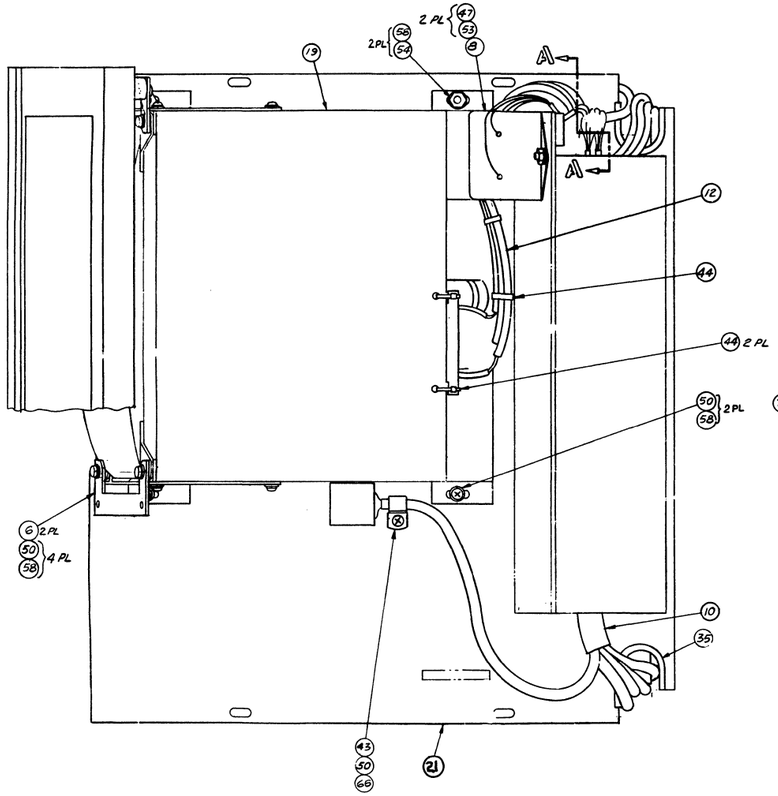

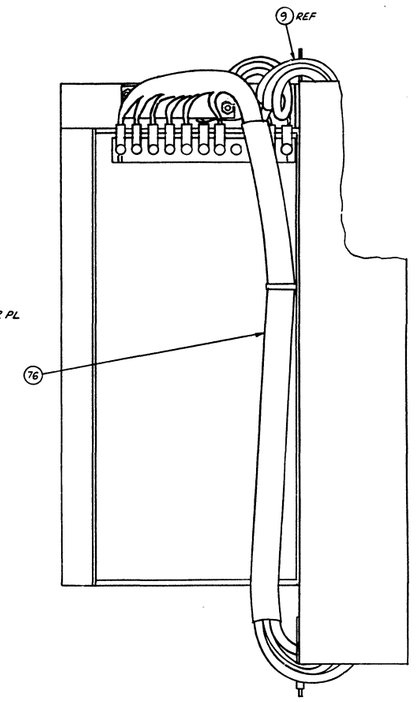

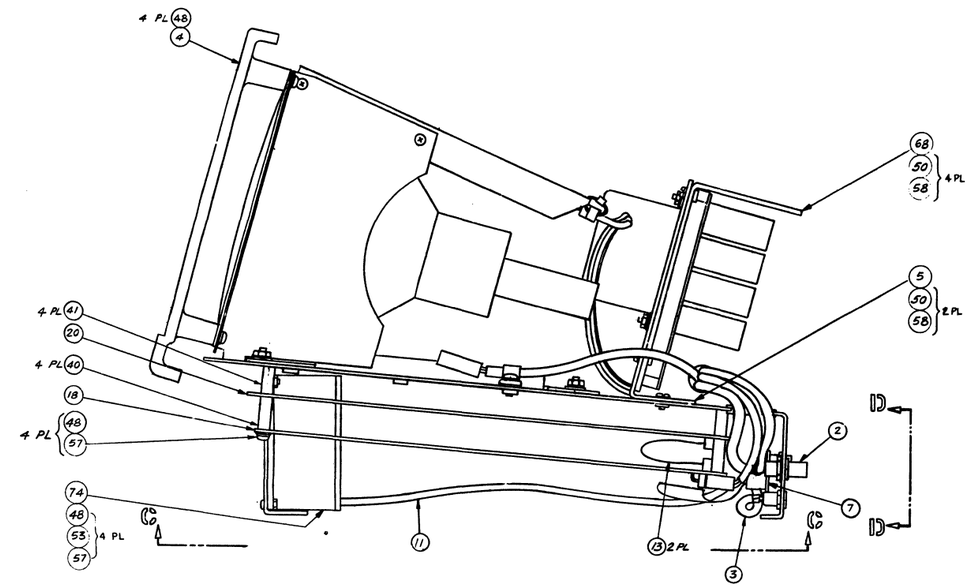

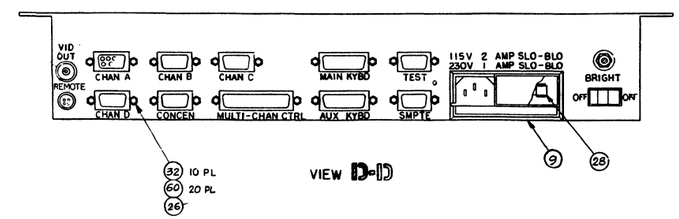

VIEW D-D

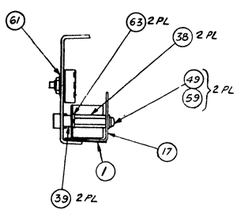

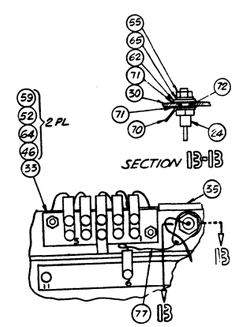

SECTION B-B

VIEW A-A

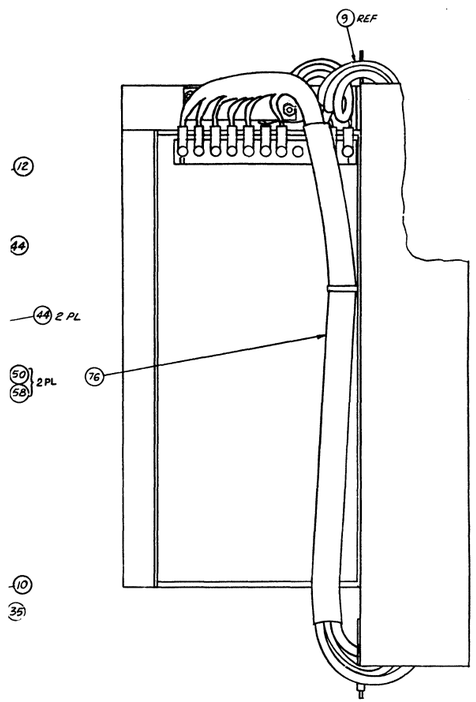

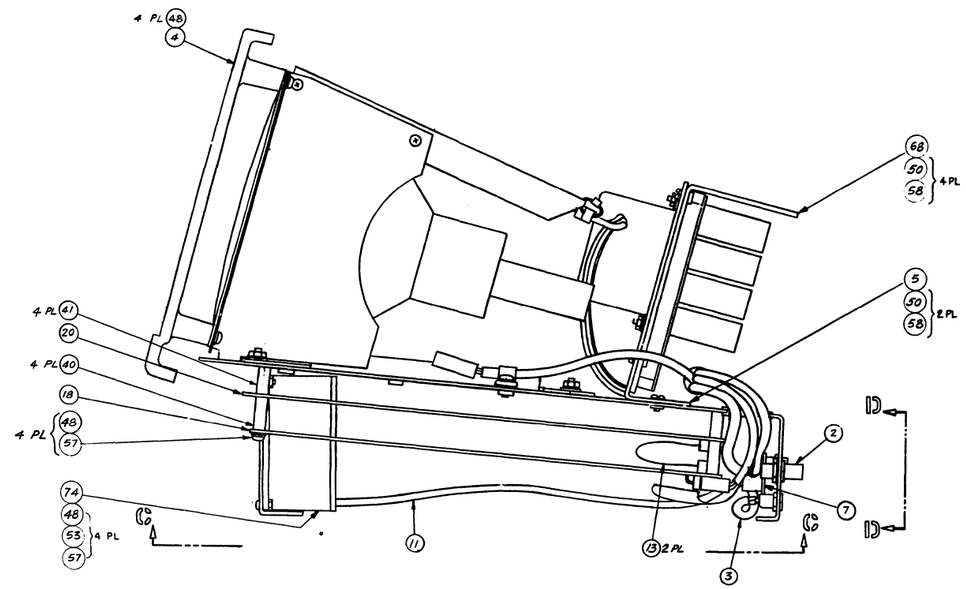

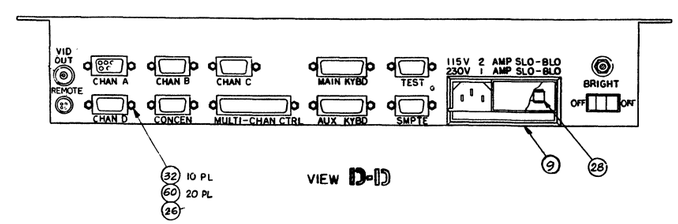

VIEW D-D

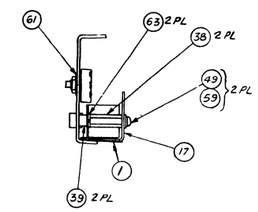

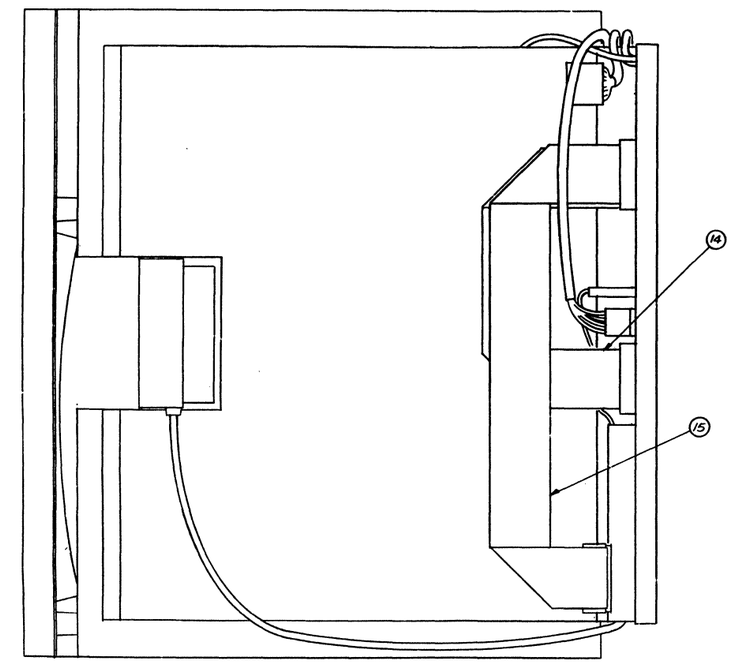

VIEW C-C

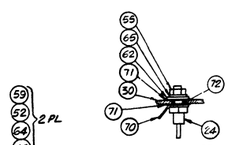

SECTION B-B

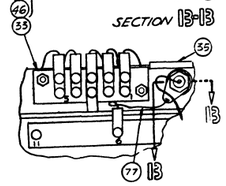

VIEW A-A

Assembly No. 1465093-02B.
120V Chassis Assembly

ITEM NO.	PART NUMBER	DESCRIPTION	REF DESIG	QTY REQD PER DASH NUMBER -01	-02
1	1403328-AB	LABEL, WARNING		1	1
2	1420207-01	VIDEO OUT CABLE ASSEMBLY		1	1
3	1420208-01	REMOTE CABLE ASSEMBLY		1	1
4	1420223-04	BEZEL		1	1
5	1420236-02	BRACKET, POWER SUPPLY		1	1
6	1420242-02	BRACKET, BEZEL		2	2
7	1420258-05	PWA, CONTROL INTERFACE		1	1
8	1420431-01	RFI FILTER	FL1	1	1
9	1420433-01	AC CABLE ASSEMBLY		1	1
10	1420434-01	DC POWER HARNESS		1	1
11	1420435-01	AC FAN CORD		1	1
12	1420436-01	CRT CABLE		1	1
13	1420437-01	SIGNAL INTERCONNECT CABLE ASSEMBLY, RIBBON		2	2
14	1420439-01	CONTROL PROC CABLE		1	1
15	1420440-01	I/O BOARD CABLE		1	1
16	1420456-01	INSULATOR, CU CHASSIS		1	1
17	1420471-05	PWA, I/O		1	1
18	1420477-02	CRT, MONITOR MODIFICATION ASSEMBLY		1	1
19	1464491-01	CHASSIS		1	-
20	1464512-01	PWA, CONTROL PROCESSOR		1	1
21					
22	1465155-01	CHASSIS		1	1
23					
24	013-887	DIODE, ZENER, 6.8V	VR1	1	1
25					
26	018-458	ADHESIVE, LOCTITE 222		AR	AR
27					
28	070-004	FUSE, SLO BLO, 1A, 250V	F1	1	1
29					
30	087-388	HEATSINK, COMPOUND		AR	-
31					
32	167-077	CONN PART KIT, SCREW LOCK ASSY, FEMALE, 4-40		10	10
33	180-208	TERMINAL STRIP, BARRIER, 5 TERM	TB2	1	1
34					
35	260-052	GROMMET, CATERPILLAR		AR	AR
36					
37					

LM-1465096

AMPEX	Ampex Corporation REDWOOD CITY, CALIFORNIA	CODE IDENT NO. 92739	LIST OF MATERIALS	LM-1465096 SHEET 2	REV B

ITEM NO.	PART NUMBER	DESCRIPTION	REF DESIG	QTY REQD PER DASH NUMBER -01	-02
38	280-107	SPACER, THD, HEX, 4-40 X .750 LG		2	2
39	280-543	SPACER, PLAIN, #4 X .188 LG		2	2
40	283-271	SPACER, THD STUD, INT, EXT, 6-32 X .750 LG		4	4
41	283-467	SPACER, THD, 6-32 X .625 LG, NYLON		4	4
42					
43	302-160	CLAMP, CABLE, NYLON, .250 ID		1	1
44	302-335	STRAP, CABLE		AR	AR
45					
46	471-330	SCREW, FLAT HD, 4-40 X .500 LG		2	2
47	471-345	SCREW, FLAT HD, 6-32 X .375 LG		2	2
48	473-269	SCREW, PAN HD, SEM, 6-32 X .312 LG		12	12
49	473-324	SCREW, PAN HD, SEM, 4-40 X .250 LG		4	4
50	473-734	SCREW, PAN HD, SEM, 8-32 X .375 LG		11	11
51					
52	492-032	NUT, HEX, #4		2	2
53	496-005	NUT, W/LOCK WASHER, 6-32		6	6
54	496-006	NUT, W/LOCK WASHER, 8-32		4	4
55	498-434	NUT, HEX, FINISHED, 10-32		1	1
56					
57	501-009	WASHER, PLAIN, #6		8	8
58	501-205	WASHER, PLAIN, #8		12	12
59	501-169	WASHER, PLAIN, #4		4	4
60	501-186	WASHER, PLAIN, #4		20	20
61	501-204	WASHER, SHIM, .250 ID, .438 OD		1	1
62	501-800	WASHER, PLAIN, #10		1	1
63	502-003	WASHER, LOCK, HELICAL, #6		2	2
64	502-024	WASHER, LOCK, #4, INT TOOTH		2	2
65	502-033	WASHER, LOCK, #10, INT TOOTH		1	1
66	506-140	WASHER, D		1	1
67					
68	570-582	POWER SUPPLY, SWITCHER, 4 OUTPUTS		1	1
69					
70	582-172	TRANSISTOR, MTG HDW, TERMINAL LUG, #10 STUD		1	1
71	582-179	TRANSISTOR, MTG HDW, INSUL, MICA		2	-
72	582-180	TRANSISTOR, MTG HDW, BUSING, INSUL, TEFLON		1	1
73	582-389	DIODE MTG HDW. INSULATOR RUBBER	REF:VR1		2
74	591-313	FAN UNIT, 29/35 CFM, 220/230V		1	1
75					
76		SLEEVING, PVC, FLEXIBLE		AR	AR
77		WIRE, STRANDED, INSULATED, 18 AWG		AR	AR

LM-1465096

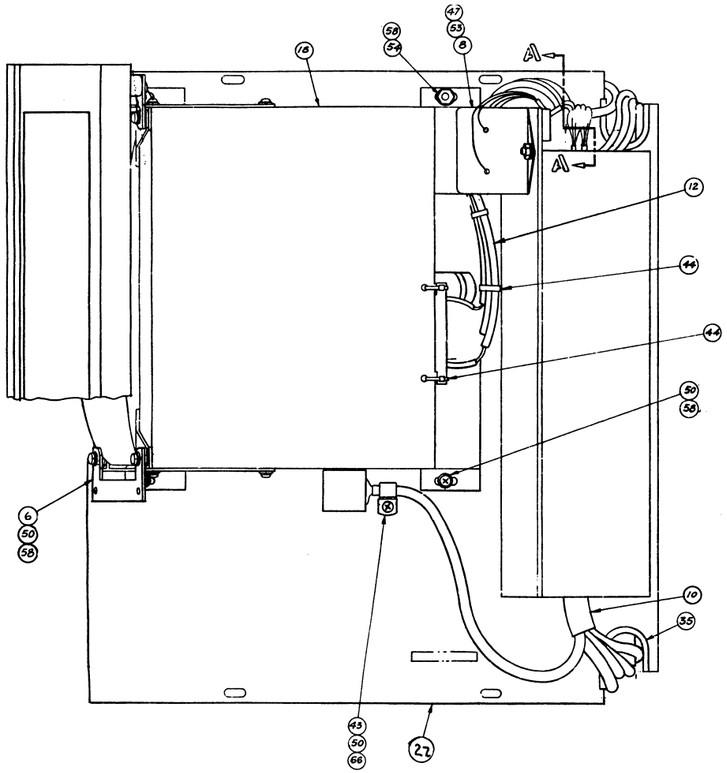
A
A
18
58
54
47
53
8
12
44
44
50
58
6
50
58
10
55
43
50
68
27

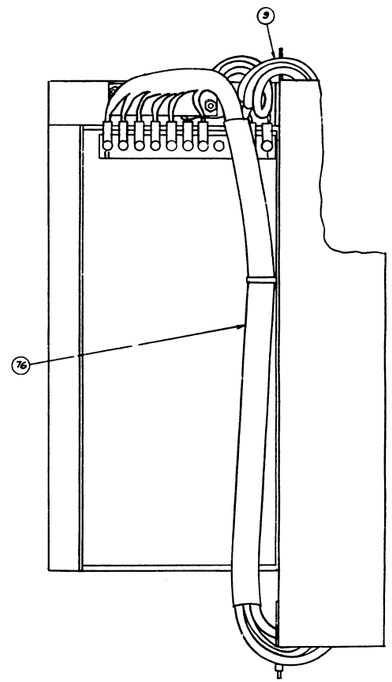
9
76

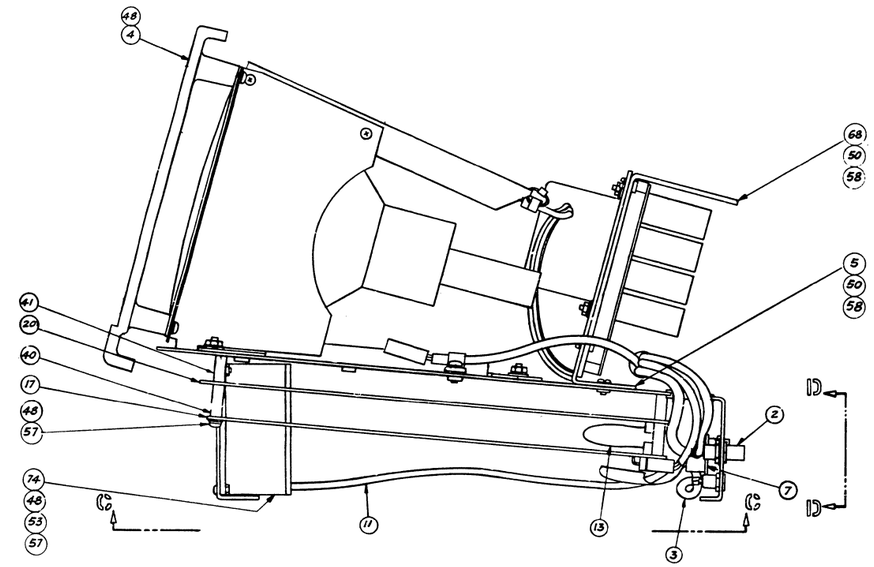
48
4
68
50
58
5
50
58
41
20
40
17
48
57
2
7
74
48
53
57
11
13
3
C
C
D
D

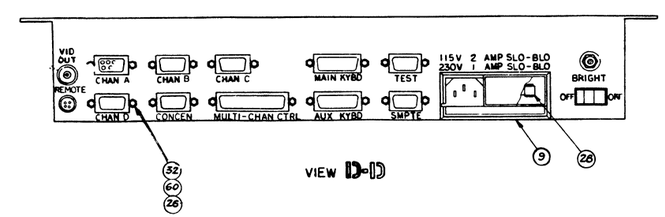
VID OUT
REMOTE
CHAN A
CHAN B
CHAN C
MAIN KYBD
TEST
115V 2 AMP SLO-BLO
230V 1 AMP SLO-BLO
BRIGHT
OFF
ON
CHAN D
CONCEN
MULTI-CHAN CTRL
AUX KYBD
SMPTE
32
60
28
9
28
VIEW D-D

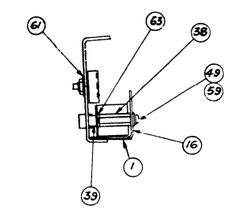
61
65
38
49
59
16
1
39

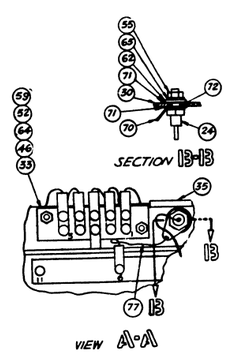
55
63
62
71
30
72
71
70
24
SECTION B-B
59
52
64
46
33
35
B
77
B
VIEW A-A

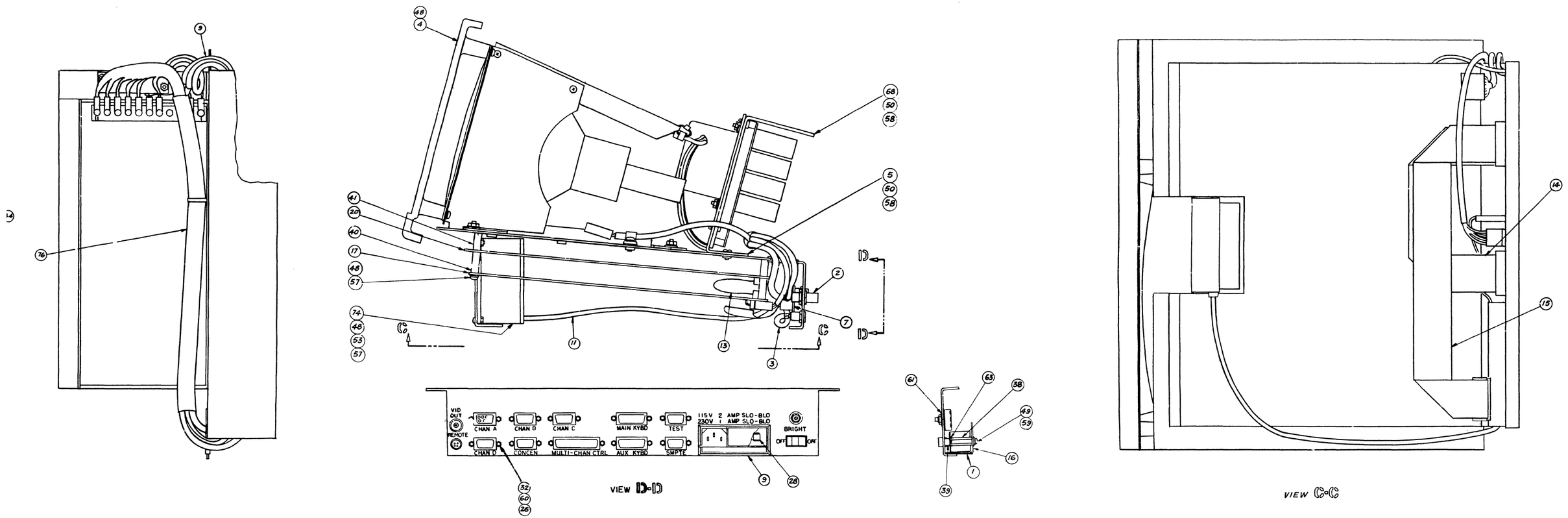

Assembly No. 1465096-02B.
230V Chassis Assembly

ITEM NO.	PART NUMBER	DESCRIPTION	REF DESIG	QTY REQD PER DASH NUMBER -01
1				
2				
3	1464514	SCHEMATIC		(A)
4				
5				
6	1464992-01	PROM ASSEMBLY, CONTROL PROCESSOR	5H	1
7	1464993-01	PROM ASSEMBLY, CONTROL PROCESSOR	6A,6B,6C,7A	4
8				
9	064-314	CAPACITOR, CER., 1uF, 50V, ±5%	C5,20	2
10	064-652	CAPACITOR, CER., .01uF, 50V, ±20%	C39	1
11	064-653	CAPACITOR, CER., .1uF, 50V, ±20%	C1,3,4,6-9,11-19,21,23,27-38,40-51,53-71,79-84,86-88	70
12				
13	034-222	CAPACITOR, MICA, 100pF, 500V, ±1%	C26	1
14	034-376	CAPACITOR, MICA, 33pF, 500V, ±.5pF	C24	1
15	034-919	CAPACITOR, MICA, 270pF, 500V, ±1%	C72-78,85	8
16				
17	055-166	CAPACITOR, MYLAR, .001uF, 50V, ±5%	C25	1
18				
19	069-092	CAPACITOR, POLY, .047uF, 50V, ±5%	C2	1
20				
21	037-812	CAPACITOR, TANT., 10uF, 25V, ±20%	C22	1
22	037-940	CAPACITOR, TANT., 47uF, 35V, ±20%	C10	1
23	037-965	CAPACITOR, TANT., 120uF, 10V, ±20%	C52	1
24				
25	017-232	CRYSTAL, 4.9152 MHz	Y2	1
26	017-250	CRYSTAL, 12 MHz	Y1	1
27				
28	013-599	DIODE, CD458	CR1-3	3
29	013-780	DIODE, ZENER, 1N4747A, 20V	VR1	1
30	581-567	DIODE, LED, MV5077B	DS1-16	16
31			DS-0	
32	000-043	INTEGRATED CIRCUIT, 2816-3	2D	1
33	000-132	7407	2A	1
34	000-138	74LS195	4E	1
35	001-042	DS3692N	5U,V	2
36	001-088	INTEGRATED CIRCUIT, 74LS373	1B,F,2F	3

LM-1464512

AMPEX Ampex Corporation REDWOOD CITY, CALIFORNIA	CODE IDENT NO. 92739	LIST OF MATERIALS	LM- 1464512 SHEET 2 OF 5	REV B

ITEM NO.	PART NUMBER	DESCRIPTION	REF DESIG	QTY REQD PER DASH NUMBER -01
37	001-991	INTEGRATED CIRCUIT, Z8002A 1	6E	1
38	586-807	MC4024P	5K	1
39	589-814	74LS04	3W	1
40	589-817	74LS11	3V	1
41	589-820	74LS74	4A,7E	2
42	589-823	74LS138	3U,5W	2
43	589-824	74LS153	3E	1
44	589-825	74LS157	4G,H	2
45	589-837	74S00	3C,5F,G	3
46	589-838	74S04	3F,5A,7D	3
47	589-839	74S08	3B	1
48	589-934	74LS221	4D	1
49	590-193	9637ATC	4U,W	2
50	590-251	AMZ8166PC 1	3G,H	2
51	590-328	74LS32	1W	1
52	590-332	74LS02	4F	1
53	590-333	74LS163	5L,7F	2
54	590-335	74LS273	2U,P,7B,C	4
55	590-443	74S02	4B	1
56	590-503	LM358	1A	1
57	590-531	74LS240	5D,E	2
58	590-544	7414	2W	1
59	590-584	74LS244	2R,S,T,V,7G	5
60	590-610	74121	3A	1
61	590-739	74LS42	3D	1
62	590-845	74S32	5B,C	2
63	590-847	74LS245	2B,C,3T,4T, 6J,7J	6
64	590-848	74S373	6H,7H	2
65	590-853	74S139	4C	1
66	590-960	MC68B50 1	5N,P,S,T	4
67	590-989	INTEGRATED CIRCUIT, TMS4164 1	3J,K,L,M,N,P,R,S, 4J,K,L,M,N,P,R,S	16
68				
69				
70				
71	041-008	RESISTOR, C.C., 1.5K OHMS, 1/2W, ±5%	R6	1
72				
73	066-660	RESISTOR, C.F., 22 OHMS, 1/4W, ±5%	R17	1
74	066-663	220	R3,10,13,14, 18	5
75	066-665	1K	R31-33	3
76	066-668	4.7K	R9,11,15,16, 19,20,24	7
77	066-715	1.2K	R12	1
78	066-717	47K	R4,8	2
79	066-827	3.9K	R2	1
80	066-830	10K	R25,28-30	4
81	066-832	RESISTOR, C.F., 18K OHMS, 1/4W, ±5%	R7	1

LM-1464512

AMPEX Ampex Corporation REDWOOD CITY, CALIFORNIA	CODE IDENT NO 92739	LIST OF MATERIALS	LM-1464512 SHEET 3 OF 5	REV B

ITEM NO.	PART NUMBER	DESCRIPTION	REF DESIG	QTY REQD PER DASH NUMBER -01
82	066-865	RESISTOR, C.F., 12K OHMS, 1/4W, ±5%	R1	1
83	076-004	RESISTOR, C.F., 180 OHMS, 1/4W, ±5%	R26,27,34,35	4
84	076-039	RESISTOR, C.F., 20 OHMS, 1/4W, ±5%	R23	1
85				
86				
87				
88	062-964	RESISTOR, M.F., 4.53K OHMS, 1/4W, ±1%	R21	1
89	062-968	RESISTOR, M.F., 4.99K OHMS, 1/4W, ±1%	R5	1
90	062-972	RESISTOR, M.F., 5.62K OHMS, 1/4W, ±1%	R22	1
91				
92				
93	039-163	RESISTOR, NETWORK, 470 OHMS, 10 PIN SIP	U1,4	2
94	039-241	RESISTOR, NETWORK, 4.7K OHMS, 10 PIN SIP	U2,3	2
95	039-398	RESISTOR, NETWORK, 5.1K OHMS, 16 PIN DIP	4V	1
96				
97	014-247	TRANSISTOR, NPN, CD38	Q1	1
98	014-364	TRANSISTOR, PNP, CD438	Q2	1
99				
100	119-492	SWITCH ASSY, ROCKER, 16 PIN DIP	1S,T	2
101				
102	135-159	HEADER ASSY, RIGHT ANGLE, 6 POST	J10	1
103	135-424	6	J4	1
104	135-441	40	J2,3	2
105	135-448	HEADER ASSY, RIGHT ANGLE, 26 POST	J5	1
106				
107	143-981	JACK, P.C., TIP	REF: J1-A,B,C,J6-A,B,C - J9-A,B,C,J11-A,B,C	18
108				
109	280-998	SPACER, TRANSISTOR, TO-5	REF:Q1,2	2
110				
111	302-395	STRAP, MOUSETAIL	REF:Y1,2	2
112				
113	582-280	SOCKET, I.C., MTG HDW, 24 PIN	REF:2D,5N,P,S,T	5
114	582-281	28 PIN	REF: 5H,6K,M,N,P,S,T,U,V, 7K,M,N,P,S,T,U,W	17
115	582-282	40 PIN	REF:6E	1
116	582-329	8 PIN	REF:1A,4U,W	3
117	582-330	14 PIN	REF: 1W,2A,W,3A,B,C,F,V, 3W,4A,B,F,5A,B,C,F, 5G,K,7D,E	20
118	582-331	16 PIN	REF: 3D,E,J,K,L,M,N,P,R, 3S,U,4C,D,E,G,H,J,K, 4L,M,N,P,R,S,V,5L,U, 5V,W,6A,B,C,7A,F	34
119	582-333	SOCKET, I.C., MTG HDW, 20 PIN	REF: 1B,F,2B,C,F,P,R,S,T, 2U,V,3G,H,T,4T,5D,E, 6H,J,7B,C,G,H,J	24
120				
121				
122	602-044	PLUG, SHORTING, RED	J1,6-9,11	6
123				

LM-1464512

AMPEX Ampex Corporation Redwood City, California	CODE IDENT NO. 92739	LIST OF MATERIALS	LM-1464512 SHEET 4 OF 5	REV B

ITEM NO.	PART NUMBER	DESCRIPTION	REF DESIG	QTY REQD PER DASH NUMBER -01									
124													
125	615-002	WIRE, SOLID, UNINSULATED, 22 AWG		A/R									

NOTES:

1. STATIC SENSITIVE, SPECIAL HANDLING REQUIRED PER AMPEX STD HE1-1.

LM-1464512

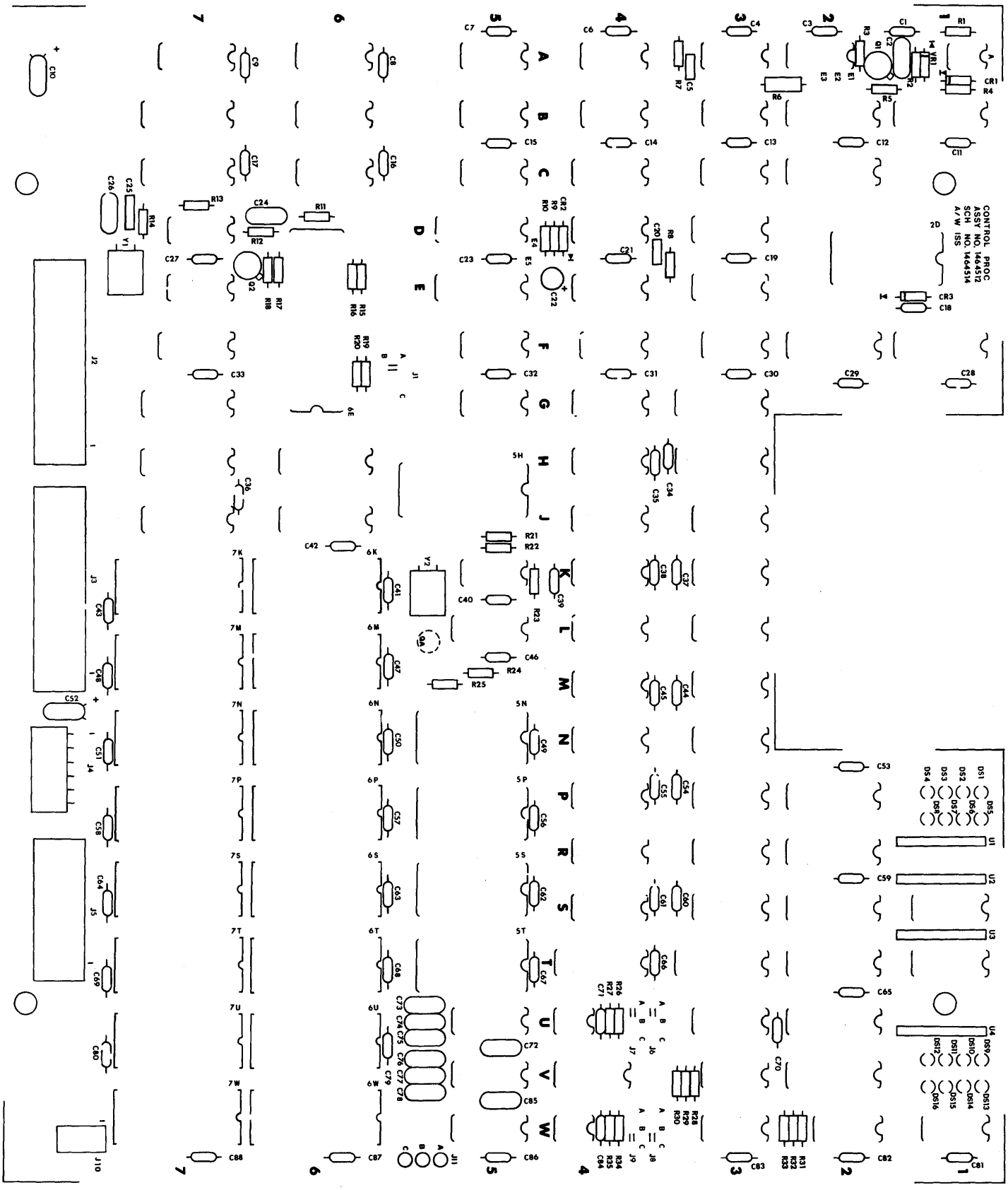

Assembly No. 1464512-01B. Control Processor PWA

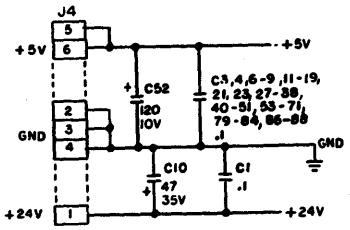

REFERENCE DESIGNATIONS	
LAST USED	NOT USED
C88	
CR3	
DS16	
E5	
J11	
Q2	
R35	
U4	
VR1	
Y2	

NOTES, UNLESS OTHERWISE SPECIFIED:

1. RESISTANCE VALUES ARE IN OHMS, 1/4W, 5%.
2. CAPACITANCE VALUES ARE IN MICROFARADS, 50V, 20%.
3. FOR FUTURE USE.
4. STATIC SENSITIVE: SPECIAL HANDLING REQD PER AMPEX STD HE1-1.
5. PROMS FOR SC/SCP ONLY.
6. PROMS FOR MC/MCP ONLY.
7. DIODES ARE CD458.

I.C. CHART

REFERENCE DESIGNATION	5H	6A,B,C. 7A	6P 5 4	6T 5 4	6W 5 4	7P 5 4	7T 5 4	7W 5 4		
AMPEX P/N	1464992-01	1464993-01	146 5615-01	146 5616-01	146 5617-01	146 5618-01	146 5619-01	146 5620-01		
VENDOR P/N	82S100	TBP18S030	27128	27128	27128	27128	27128	27128		
VOLTAGE (PIN)	+5V (28)	+5V (16)	+5V (28)	+5V (28)	+5V (28)	+5V (28)	+5V (28)	+5V (28)		
GROUND (PIN)	(14)	(8)	(14)	(14)	(14)	(14)	(14)	(14)		

REFERENCE DESIGNATION	6P 6 4	6T 6 4	6W 6 4	7P 6 4	7T 6 4	7W 6 4			6E	2D 4
AMPEX P/N	146 5621-01	146 5622-01	146 5623-01	146 5624-01	146 5625-01	146 5626-01			001-991	000-043
VENDOR P/N	27128	27128	27128	27128	27128	27128			Z8002A-CMB	2816-3
VOLTAGE (PIN)	+5V (28)	+5V (28)	+5V (28)	+5V (28)	+5V (28)	+5V (28)			+5V (10)	+5V (24)
GROUND (PIN)	(14)	(14)	(14)	(14)	(14)	(14)			(31)	(12)

REFERENCE DESIGNATION	3F,5A,7D	2W	3U,5W	4C	4A,7E	5B,C	1W	4D	4B	4F	3B	4G,H
AMPEX P/N	589-838	590-544	589 823	590-853	589-820	590-845	590-328	589-934	590-443	590-332	589-839	589-825
VENDOR P/N	74S04	7414	74LS138	74S139	74LS74	74S32	74LS32	74LS221	74S02	74LS02	74S08	74LS157
VOLTAGE (PIN)	+5V (14)	+5V (14)	+5V (16)	+5V (16)	+5V (14)	+5V (14)	+5V (14)	+5V (16)	+5V (14)	+5V (14)	+5V (14)	+5V (16)
GROUND (PIN)	(7)	(7)	(8)	(8)	(7)	(7)	(7)	(8)	(7)	(7)	(7)	(8)

REFERENCE DESIGNATION	5L,7F	[illegible]	4E	3D	2R,S,T,V 7G	2B,C,3T, 4T,6J,7J	6H,7H	5D,5E	1B,1F,2F	4U,4W	5U,5V	3G,3H 4
AMPEX P/N	590-333	589-824	000-138	590-739	590-584	590-847	590-848	590-531	000-088	590-193	001-042	590-251
VENDOR P/N	74LS163	74LS153	74LS195	74LS42	74LS244	74LS245	74S373	74LS240	74LS373	9637ATC	DS3692N	AMZ8166PC
VOLTAGE (PIN)	+5V (16)	+5V (16)	+5V (16)	+5V (16)	+5V (20)	+5V (20)	+5V (20)	+5V (20)	+5V (20)	+5V (1)	+5V (1)	+5V (20)
GROUND (PIN)	(8)	(8)	(8)	(8)	(10)	(10)	(10)	(10)	(10)	(4)	(5)	(10)

REFERENCE DESIGNATION	2U,P 7B,C	5N,P,S,T 4	3J,K,L,M,N,P,R,S, 4J,K,L,M,N,P,R,S 4	1A	3V	3W	1S,1T	3A	2A	5K	3C,5F,5G
AMPEX P/N	590-335	590-960	590-989	590-503	589-817	589-814	119-492	590-610	000-132	586-807	589-837
VENDOR P/N	74LS273	MC68B50	TMS4164JDL-15	LM358	74LS11	74LS04	4-435626-2	74121	7407	MC4024P	74S00
VOLTAGE (PIN)	+5V (20)	+5V (12)	+5V (8)	+24V (8)	+5V (14)	+5V (14)	SWITCH ASSY	+5V (14)	+5V (14)	+5V (14)	+5V (14)
GROUND (PIN)	(10)	(1)	(16)	(4)	(7)	(7)		(7)	(7)	(7)	(7)

Schematic No. 1464514A. Control Processor PWA (Sheet 1 of 8)

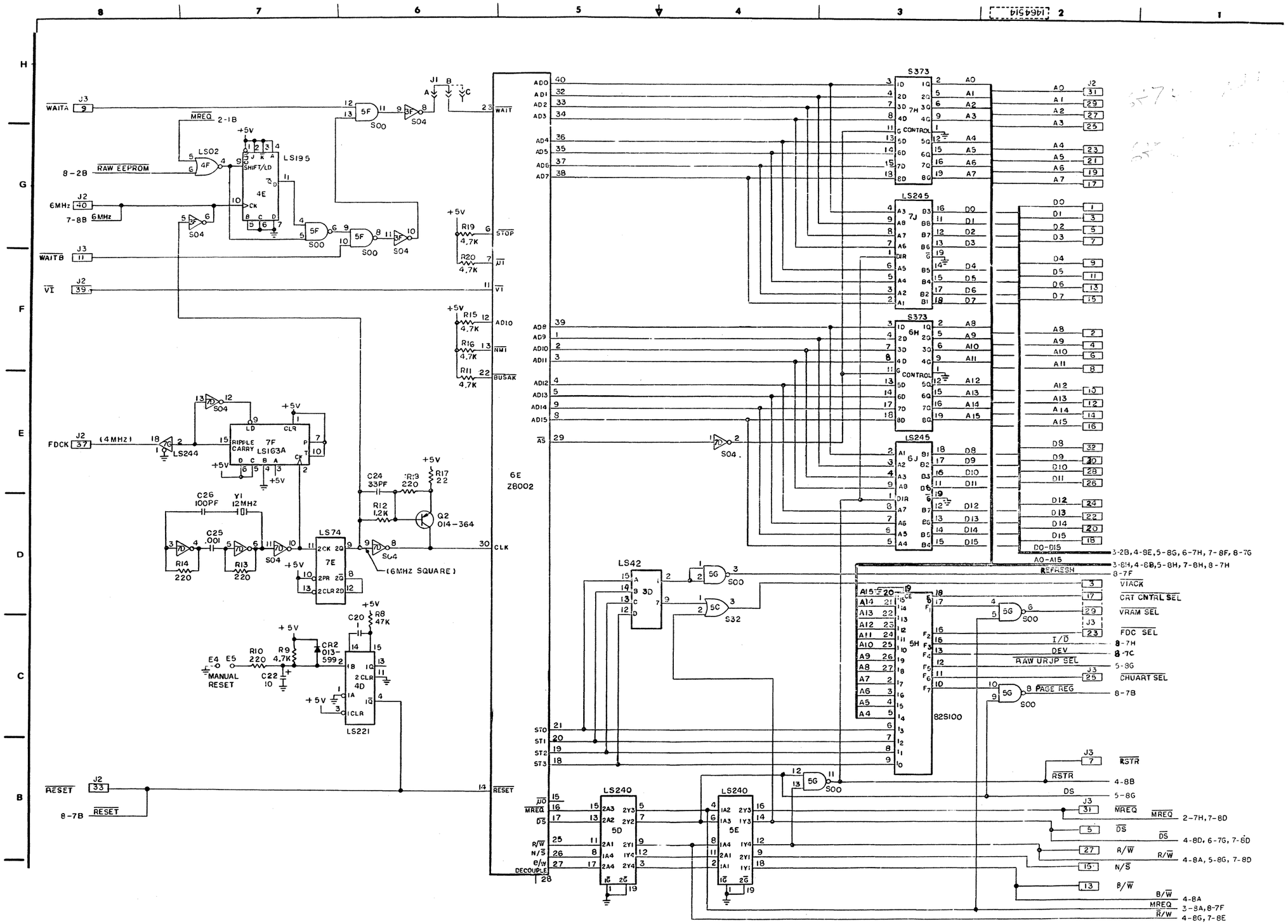

Schematic No. 1464514A.
Control Processor PWA
(Sheet 2 of 8)

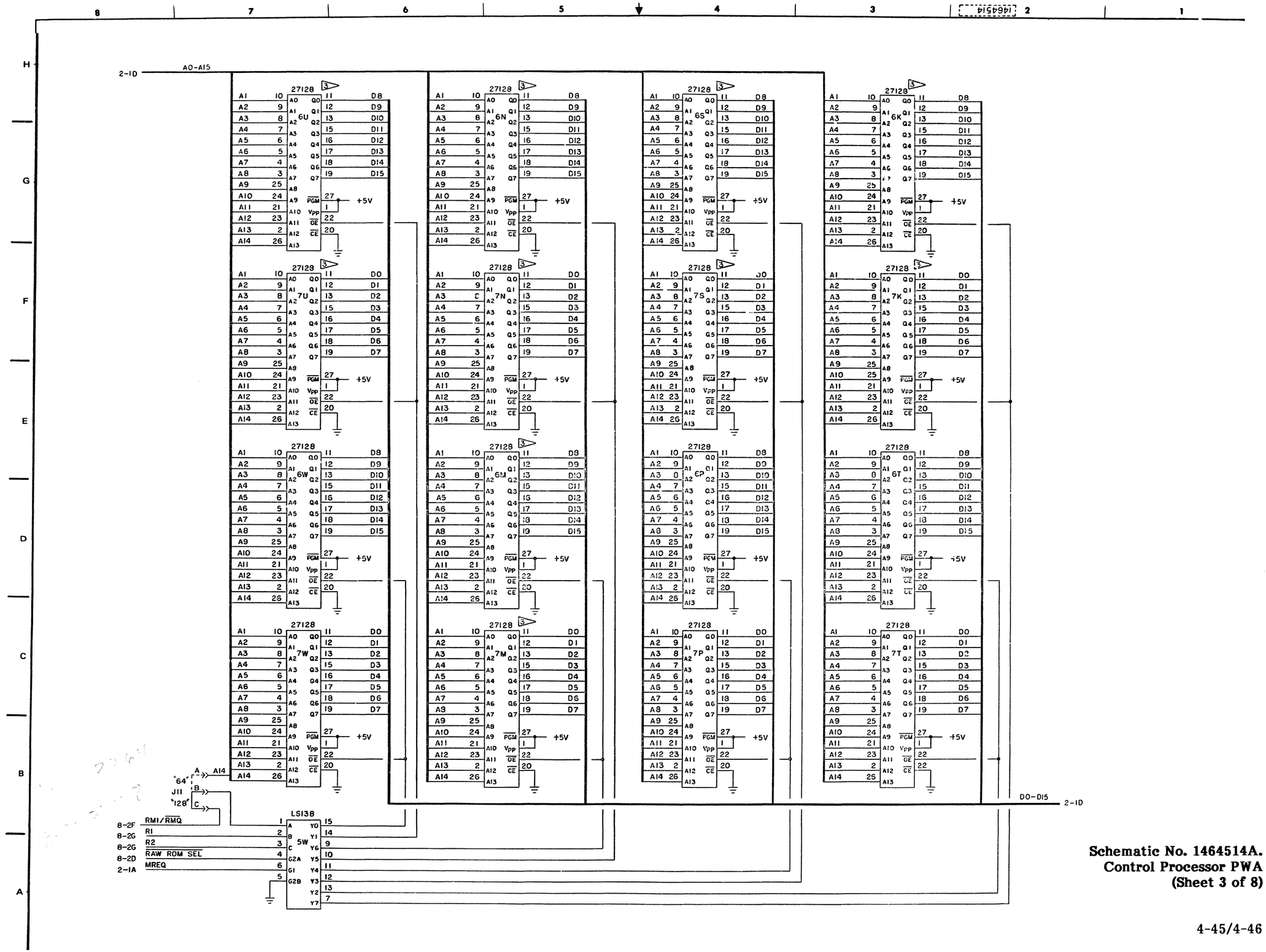

Schematic No. 1464514A.
Control Processor PWA
(Sheet 3 of 8)

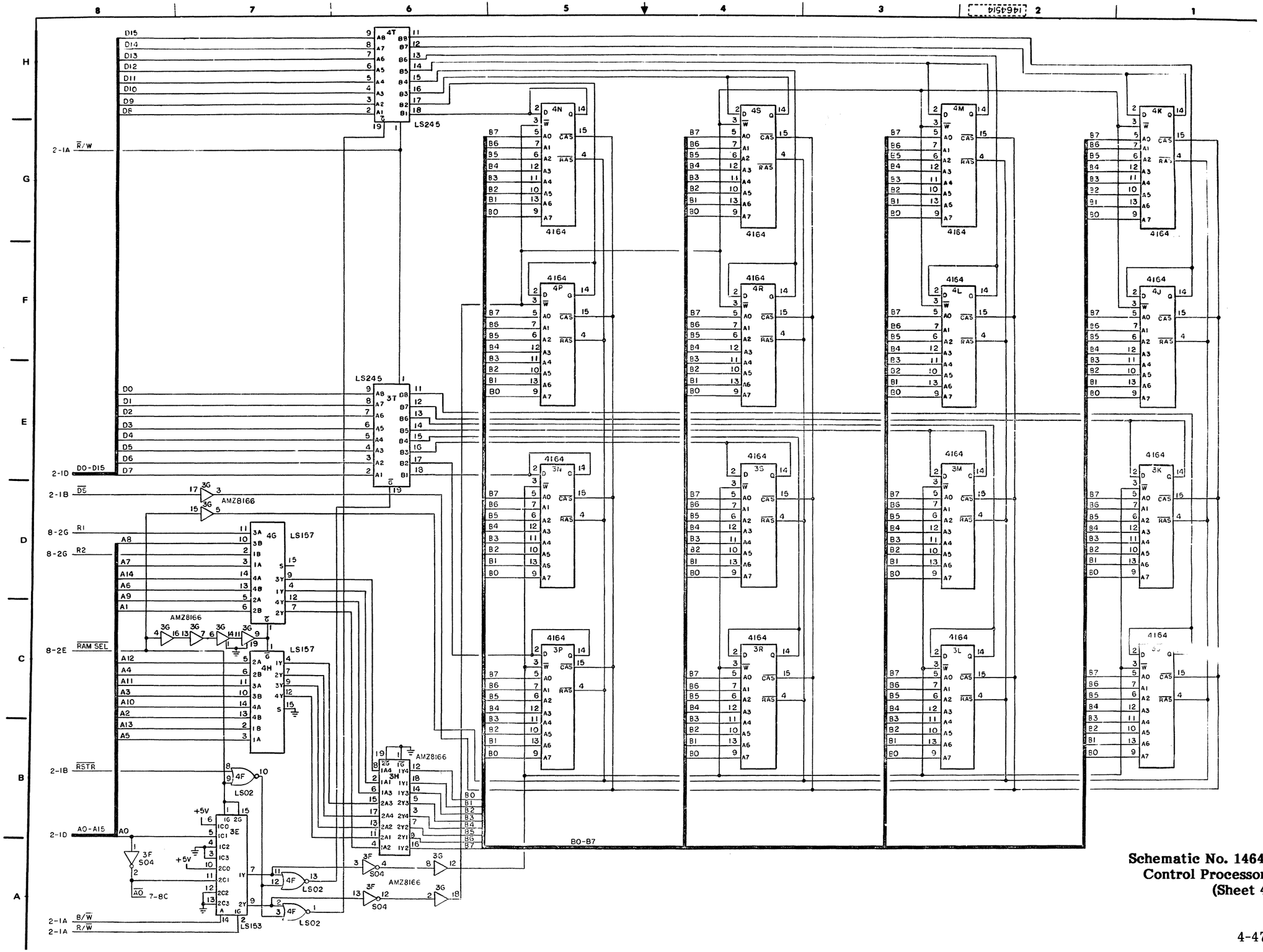

Schematic No. 1464514A.
Control Processor PWA
(Sheet 4 of 8)

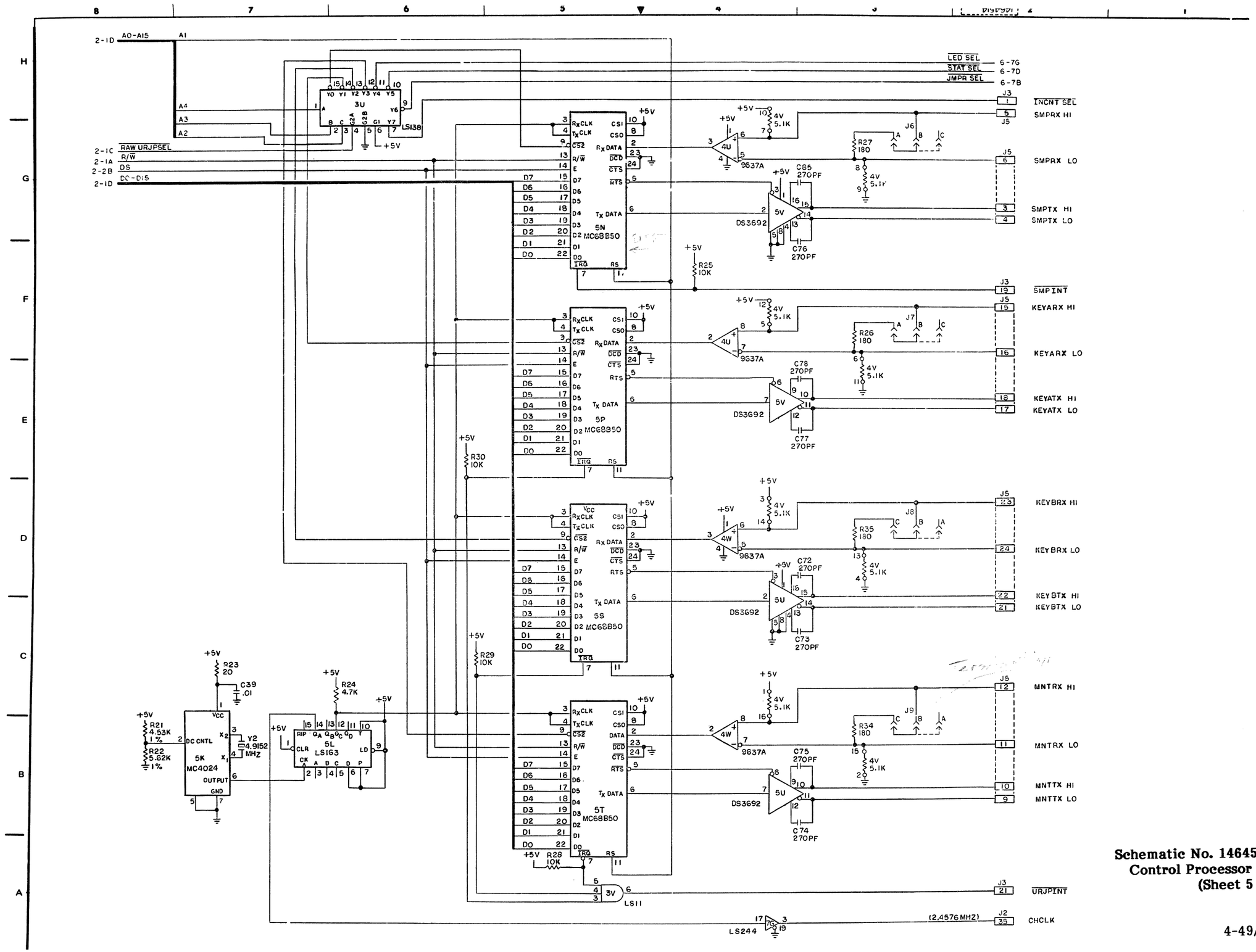

Schematic No. 1464514A.
Control Processor PWA
(Sheet 5 of 8)

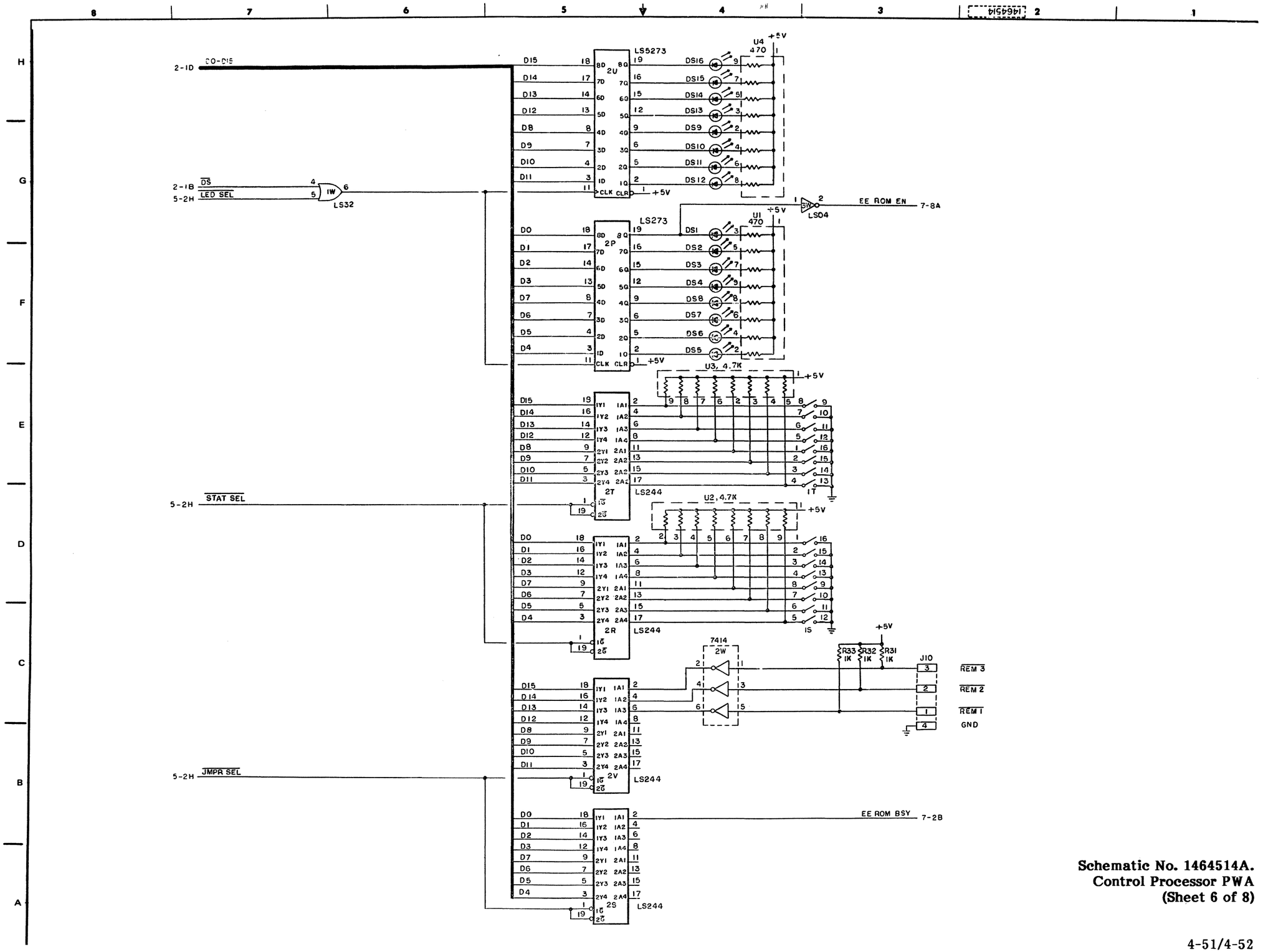

Schematic No. 1464514A.
Control Processor PWA
(Sheet 6 of 8)

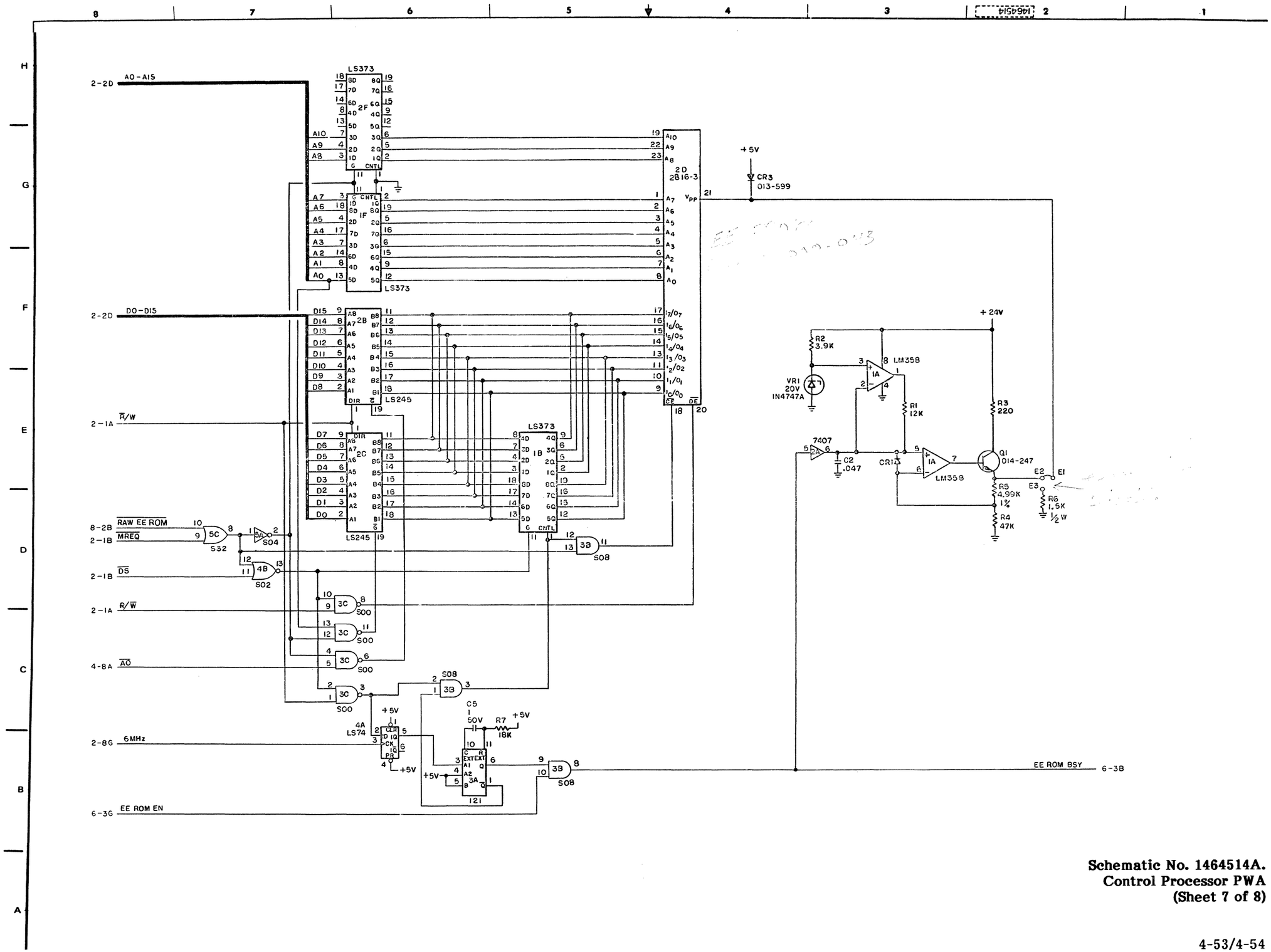

Schematic No. 1464514A.
Control Processor PWA
(Sheet 7 of 8)

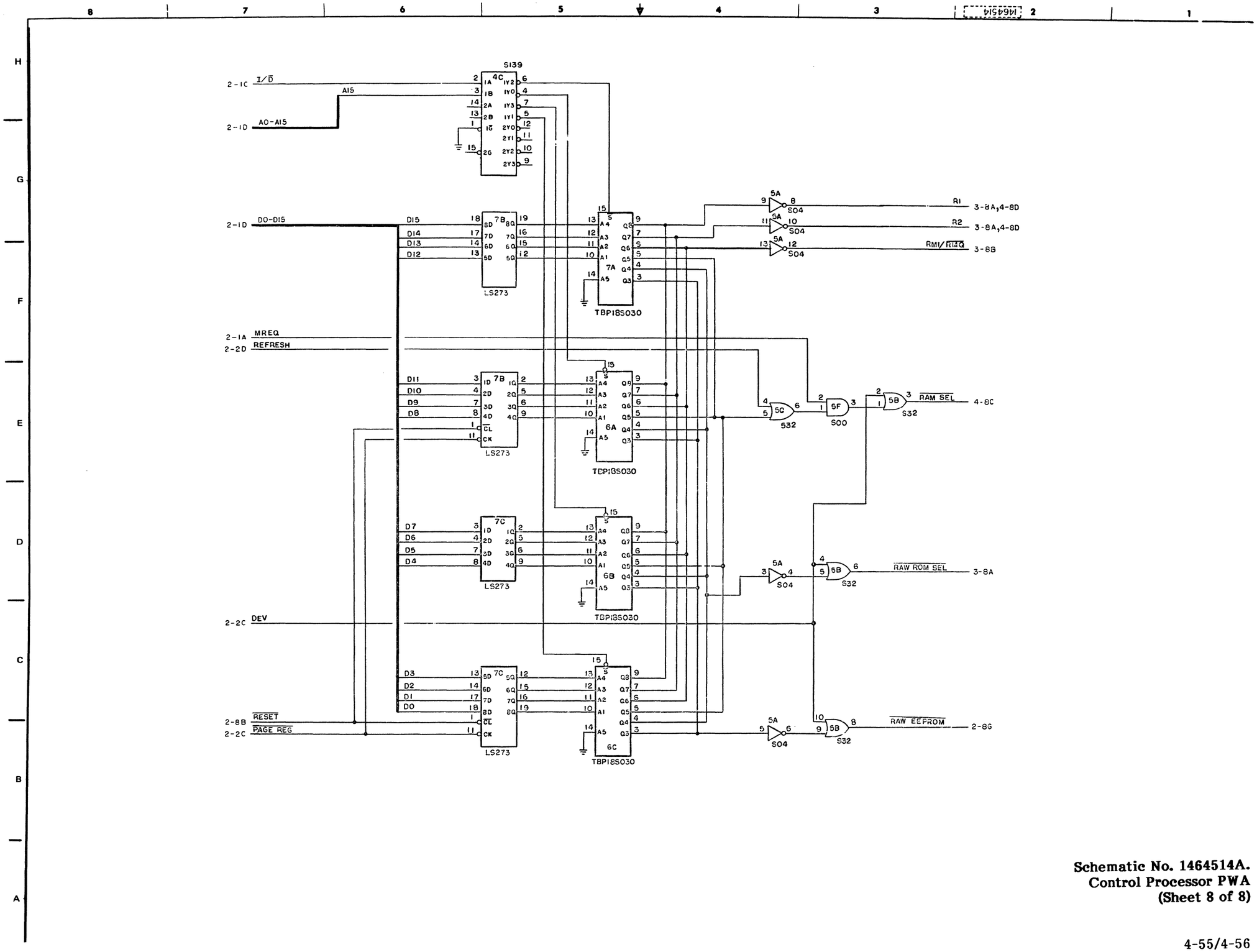

Schematic No. 1464514A.
Control Processor PWA
(Sheet 8 of 8)

ITEM NO.	PART NUMBER	DESCRIPTION	REF DESIG	QTY REQD PER DASH NUMBER -01	-02	-03	-04	-05
1				-01	-02	-03	-04	
2								
3	1420473	SCHEMATIC		(-)	C	D	E	H
4								
5								
6	064-313	CAPACITOR, CER., .68uF, 50V, ±5%	C21	1	1	1	1	1
7	064-653	CAPACITOR, CER., .1uF, 50V, ±20%	C3-19,23-40, 42-59,60-70,73	65	65	65	65	65
8								
9	034-961	CAPACITOR, MICA, 120pF, 500V, ±5%	C20	1	1	1	1	1
10	034-222	CAPACITOR, MICA, 100pF, 500V, ±1%	C1	1	1	1	1	1
11								
12	055-166	CAPACITOR, MYLAR, .001uF, 50V, ±5%	C2	1	1	1	1	1
13								
14	037-790	CAPACITOR, TANT., 2.2uF, 20V, ±20%	C22	1	1	1	1	1
15	037-812	10uF, 25V	C41	1	1	1	1	1
16								
17	037-940	47uF, 35V	C72	1	1	1	1	1
18	037-965	CAPACITOR, TANT., 120uF, 10V, ±20%	C71	1	1	1	1	1
19								
20								
21	017-251	CRYSTAL, 12.5785 MHZ	Y1	1	1	1	1	1
22	135-448	HEADER ASSY., 26 POSTS, RT. ANGLE	J1	-	1	1	1	1
23	000-044	INTEGRATED CIRCUIT, WD1510-01 ▷1	5A,B,C,D,E,K,J	7	1	-	-	-
24	000-045	CRT8002A-003 ▷1	5P	1	1	-	-	-
25	000-047	AM9519-1 ▷1	5H	1	1	1	1	1
26	001-965	WD2143-03	2M	1	1	1	1	1
27	000-049	FD1793-02	4L	1	1	1	1	1
28	000-050	WD1691 ▷1	2L	1	1	1	1	1
29	000-045	CRT8002A ▷1	5P		1	1	1	1
30	586-713	7407	1M	1	1	1	1	1
31	589-853	7438	5U,6U	2	2	2	2	2
32	589-837	74S00	2U,4G	3	2	2	2	2
33	589-843	74S20	1T	1	1	1	1	1
34	590-544	7414	3U,4U	2	2	2	2	2
35	589-823	74LS138	3G,3H,6P	3	3	3	3	3
36	587-387	74LS74	2K,4F,4M,7A,B, C,D,E	8	-	-	-	-
37	590-845	INTEGRATED CIRCUIT, 74S32	2J	1	1	1	1	1

LM-1420471

AMPEX	Ampex Corporation REDWOOD CITY CALIFORNIA	CODE IDENT NO 92739	LIST OF MATERIALS	LM-1420471 SHEET 2 of 4	REV S

ITEM NO	PART NUMBER	DESCRIPTION	REF DESIG	QTY REQD PER DASH NUMBER -01	-02	-03	-04	-05
38	589-813	INTEGRATED CIRCUIT, 74LS00	7F	1		1	1	1
39	587-523	74LS32	3K,1L,5N,7R	4	-	-	-	-
40	589-814	74LS04	1N,5M,7N,7S	4	4	4	4	4
41	589-815	74LS08	3N,6R	2	2	2	2	2
42	590-329	74LS123	4N,7T	2	2	2	2	2
43	590-332	74LS02	5G,6F	2	2	2	2	2
44	587-752	74LS54	6A,B,C,D,E	5	5	5	5	5
45	589-825	INTEGRATED CIRCUIT, 74LS157	2R,2S,2T	3	3	3	3	3
46	1464258-01	PROM ASSY I/O, REF: TBP14S10	5T	1		1	1	1
47	013-689	DIODE, SWITCHING	CR1		-	1	1	1
48	589-090	INTEGRATED CIRCUIT, 74166	3S	1		1	1	1
49	590-847	74LS245	1F,1G,3R,4R, 4S,5L	6	6	6	6	6
50	589-449	74LS244	1P,2F,2B,2D, 3F,3J,4J	7	-	-	-	-
51	590-586	74LS374	2G,7U	2	2	2	2	2
52	589-752	74LS373	5F,4K	2	-	-	-	-
53	589-838	74S04	2H,4H	2	2	2	2	2
54	589-839	74S08	3T	1		1	1	1
55	589-846	74S74	4T	1		1	1	1
56	589-938	74S175	6T	1		1	1	1
57	590-057	CRT5037 (1)	4P	1		1	1	1
58	590-868	74S244	1H,1K,1R,1S, 1J,7P	5	6	6	6	6
59	590-193	9637A	1A,B,C,D,E	5	5	5	5	5
60	001-042	DS3692	2A,C,E	3	3	3	3	3
61	590-932	CDP1854A	4A,B,C,D,E	5	5	5	5	5
62	590-443	74S02	1U	1	1	1	1	1
63	590-547	74S124	2P	1	1	1	1	1
64	590-983	TMM2016P (1)	5S,5R	2	2	2	2	2
65	001-897	INTEGRATED CIRCUIT, 74S162	6S	1	1	1	1	1
66	000-044	INTEGRATED CIRCUIT, WD1510-01 (1)	5A,B,C,D,E	-	5	5	5	5
67	589-820	INTEGRATED CIRCUIT, 74LS74	4F,4M,7A,B,C, D,E	-	7	7	7	7
68	590-328	INTEGRATED CIRCUIT, 74LS32	1L,5N,7R	-	3	3	3	3
69	066-842	RESISTOR, C.F., 5.1K OHMS, 1/4W, 5%	R1,3,4,6,7,9, 10,12,13,15	10	10	10	10	10
70	066-619	180	R2,5,8,11,14	5	5	5	5	5
71	066-663	220	R20,22-25	5	5	5	5	5
72	066-665	1K	R30,50,51	3	-	-	-	-
73	066-668	4.7K	R1,17,32,46,49, 52,55	7	-	-	-	-
74	066-677	68	R35	1	1	1	1	1
75	066-717	47K	R36,39	2	2	2	2	2
76	066-812	100	R26	1	1	1	-	-
77	066-813	150	R31,42-45	5	5	5	5	5
78	066-830	10K	R33,47,56	3	3	-	-	-
79	066-938	47	R19,21	3	2	2	2	2
80	076-004	RESISTOR, C.F., 180 OHMS, 1/4W, 5%	R27,28	2	2	2	2	2
81	590-584	INTEGRATED CIRCUIT, 74LS244	1P,2F,2B,2D,3F, 3J	-	6	6	6	6
82	001-088	INTEGRATED CIRCUIT, 74LS373	5F	-	1	1	1	1

LM-1420471

AMPEX | Ampex Corporation REDWOOD CITY, CALIFORNIA | CODE IDENT NO. 92739 | LIST OF MATERIALS | LM-1420471 SHEET 3 of 4 | REV S

ITEM NO	PART NUMBER	DESCRIPTION	REF DESIG	QTY REQD PER DASH NUMBER -01	-02	-03	-04	-05
83	057-104	RESISTOR, M.F., 2.2K OHMS, 1/4W, 1%	R38	-	-	1	1	1
84	062-836	RESISTOR, M.F., 75 OHMS, 1/8W, 1%	R29	1	1	1	1	1
85	062-976	7.15K	R34	1	1	1	-	-
86	066-012	40.2K	R40	1	1	1	1	1
87	066-016	66.5K	R48	1	1	1	1	1
88	066-025	249K	R53	1	1	1	1	1
89	066-389	RESISTOR, M.F., 90.9K OHMS, 1/8W, 1%	R41	1	1	1	1	1
90	066-665	RESISTOR, C.F., 1K OHMS, 1/4W, 5%	R30,51	-	2	2	2	2
91	066-668	RESISTOR, C.F., 4.7K OHMS, 1/4W, 5%	R16,17,32,46, 49,50,52,55	-	8	8	8	8
92	044-927	RESISTOR, VARIABLE, 500 OHMS	R18	1	1	1	1	1
93	058-611	RESISTOR, VARIABLE, 10K OHMS	R33	1	1	1	1	1
94	075-317	RESISTOR, VARIABLE, 50K OHMS	R37	1	-	-	-	-
95	014-780	TRANSISTOR, MPS6514	Q1	1	1	1	1	1
96	075-010	RESISTOR, VARIABLE, 50K OHMS, 3292X	R37	-	1	-	-	-
97	058-539	RESISTOR, VARIABLE, 1K OHMS	R37		-	1	1	1
98	135-159	HEADER ASSY, 6 POST, RIGHT ANGLE	REF:J19	1	1	1	1	1
99	135-341	34 POS, STRAIGHT	REF:J16	1	1	1	1	1
100	135-424	6 PIN, RIGHT ANGLE	REF:J15	1	1	1	1	1
101	135-441	HEADER ASSY, 40 POST, RIGHT ANGLE	REF:J7,8	2	2	2	2	2
102								
103	143-981	JACK, P.C. TIP	J2(A,B,C),J3(A, B,C),J4(A,B,C), J5(A,B,C),J6(A,B,C),J9 (A,B,C),J10(A,B,C),J11 (A,B,C),J12(A,B,C),J13 (A,B,C),J14(A,B),J17(A, B,C),J18(A,B,C)	38	38	38	38	38
104								
105	187-055	PIN, WIRE WRAP	E1,2	2	2	2	2	2
106								
107	582-139	SOCKET, I.C. MTG. HDW., 20 PIN	REF:1F,G,H,J,K,P,R,S,2B,D,F,G, L,3F,J,R,4J,K,R,S,5F,L, 7P,U	24	-	-	-	-
108	582-280	24 PIN	REF:5R,S	2	2	2	2	2
109	582-281	28 PIN	REF:5A,B,C,D,E,H,J,K,P	9	-	-	-	-
110	582-282	40 PIN	REF:4A,B,C,D,E,L,P	7	7	7	7	7
111	582-329	8 PIN	REF:1A,B,C,D,E	5	5	5	5	5
112	582-330	14 PIN	REF:1L,M,N,T,U,2H,J,K,U,3K, N,T,U,4F,G,H,M,T,U,5G,M, N,U,6A,B,C,6D,E,F,R,U, 7A,B,C,D,E,F,N,R,S	40	-	-	-	-
113	582-331	16 PIN	REF:2A,C,E,P,R,S,T,3G,H,S, 4N,5T,6P,S,T,7T	16	16	16	16	16
114	582-332	SOCKET, I.C. MTG. HDW., 18 PIN	REF:2M	1	1	1	1	1
115								
116	602-044	PLUG, SHORTING	REF:J2,3,4,5,6,9,10,11,12, 13,14,17,18	13	13	13	13	13
117								
118	280-130	SPACER, TRANSISTOR, TO-18	REF: Q1	1	1	1	1	-
119	014-715	SPACER, TRANSISTOR, TO-18	REF: Q1					1
120	302-395	STRAP, MOUSETAIL	REF: Y1	1	1	1	1	1
121								
122								

LM-1420471

AMPEX	Ampex Corporation REDWOOD CITY, CALIFORNIA	CODE IDENT NO 92739	LIST OF MATERIALS	LM-1420471 SHEET 4 of 4	S

ITEM NO.	PART NUMBER	DESCRIPTION	REF DESIG	QTY REQD PER DASH NUMBER -01	-02	-03	-04	-05
123	582-333	SOCKET, I.C., MTG. HDW., 20 PIN	REF:1F,G,H,J,K,P,R,S, 2B,D,F,G,L,3F,J,R, 4R,S,5F,L,7P,U	-	21	21	21	21
124	582-281	SOCKET, I.C., MTG. HDW., 28 PIN	REF:5A,B,C,D,E,H,P	-	7	7	7	7
125	582-330	SOCKET, I.C., MTG. HDW., 14 PIN	REF:1L,M,N,T,U,2H,J, 2U,3N,T,U,4F,G,H, M,T,U,5G,M,N,U,6A 6B,C,D,E,F,R,U,7A 9,C,D,E,F,N,R,S	-	38	38	38	38
126								
127	066-818	RESISTOR, C.F., 470 OHMS, 1/4W, 5%	R54	-		1	1	1
128	066-830	RESISTOR, C.F., 10K OHMS, 1/4W, 5%	R47,56		-	2	2	2
129	066-812	RESISTOR, C.F., 100 OHMS, 1/4W, ±5%	R26,34			-	2	2

NOTES:

1. STATIC SENSITIVE SPECIAL HANDLING REQUIRED PER AMPEX STD. HE1-1.

LM-1420471

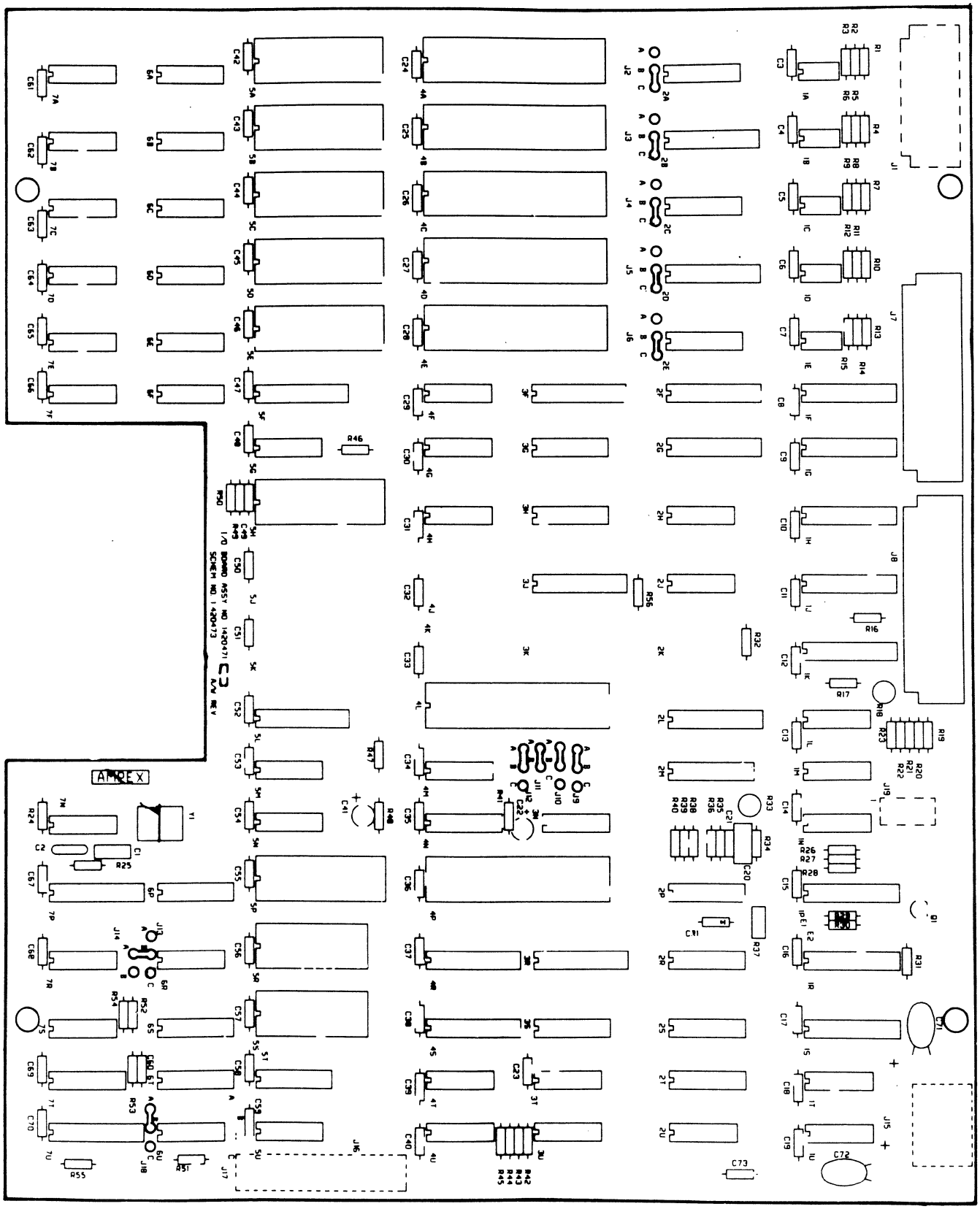

Assembly No. 1420471-05S. Input/Output PWA

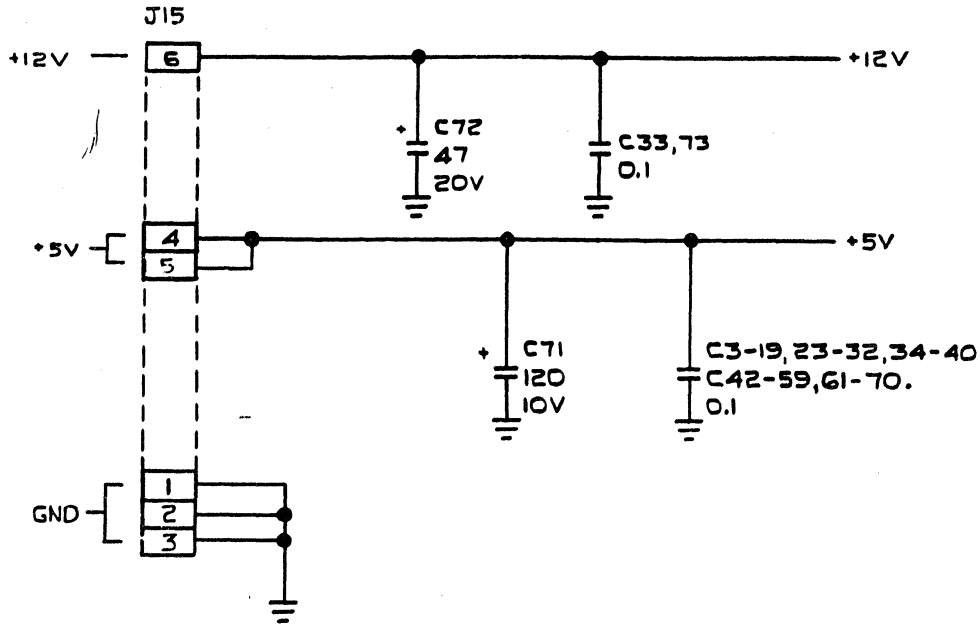

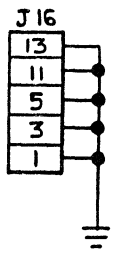

NOTES, UNLESS OTHERWISE SPECIFIED:

1. RESISTANCE VALUES ARE IN OHMS, 1/4W, 5%.
2. CAPACITANCE VALUES ARE IN MICROFARADS.

STATIC SENSITIVE: SPECIAL HANDLING REQUIRED PER AMPEX STD HE-1.

REFERENCE DESIGNATIONS LAST USED	NOT USED
R56	
C73	
Q1	
CR1	
J18	
E2	
Y1	

IC CHART

REF DESIG			5H	2M	4L	2L	5P	1M	5U,6U	2U,4G
AMPEX P/N			000-047	001-965	000-049	000-050	000-045	000-132	589-853	589-837
VENDOR P/N			AM9519-1	WD2143-03	FD1793-02	WD1691	CRT8002A	7407	7438	74S00
VOLTAGE (PIN)			+5(26)	+5(18)	+5(21),+12(40)	+5(20)	+5(12)	+5(14)	+5(14)	+5(14)
GND (PIN)			14	5	20	10	17	7	7	7
REF DESIG	1T	3U,4U	3G,3H,6P		2J	7R		1N,5M,7N,7S	3N,6R	4N,7T
AMPEX P/N	589-843	590-544	589-823		590-845	589-813		589-814	589-815	590-329
VENOR P/N	74S20	7414	74LS138		74S32	74LS00		74LS04	74LS08	74LS123
VOLTAGE (PIN)	+5(14)	+5(14)	+5(16)		+5(14)	+5(14)		+5(14)	+5(14)	+5(16)
GND (PIN)	7	7	8		7	7		7	7	8
REF DESIG	5G,6F	6A,B,C,D,E	2R,S,T	5T	3B	1E,D,3R,4E,B,3L		2B,7U		2H,4H
AMPEX P/N	590-332	587-152	589-825	1464255-01	589-090	590-847		590-586		589-838
VENDOR P/N	74LS02	74LS54	74LS157	TBP14S10	74166	74LS245		74LS374		74S04
VOLTAGE (PIN)	+5(14)	+5(14)	+5(16)	+5(16)	+5(16)	+5(20)		+5(20)		+5(14)
GND (PIN)	7	7	8	5	8	10		10		7
REF DESIG	3T	4T	6T	4P	1H,J,K,R,S,7P	1A,B,C,D,E	2A,C,E	4A,B,C,D,E	1U	2P
AMPEX P/N	589-839	589-846	589-838	590-057	590-868	590-193	001-042	590-932	590-443	590-547
VENDOR P/N	74S08	74S74	74S175	CRT5037	74S244	9637A	DS3692	CDP1854A	74S02	74S124
VOLTAGE (PIN)	+5(14)	+5(14)	+5(16)	H209,+5(14)	+5(20)	+5(1)	+5(1)	+5(1)	+5(14)	+5(16)
GND (PIN)	7	7	8	6	10	4	5	3	7	8
REF DESIG	5S,R	6S	5A,B,C,D,E	4P,M,7A,B,C,D,E	1L,5N,7R	1P,2B,D,F,3F,J	3F			
AMPEX P/N	590-983	001-897	000-044	589-820	590-328	590-584	001-088			
VENDOR P/N	TMM2016P	74S162	WD1510-01	74LS74	74LS32	74LS244	74LS373			
VOLTAGE (PIN)	+5(24)	+5(16)	+5(16)	+5(14)	+5(14)	+5(20)	+5(20)			
GND (PIN)	12	8	1	7	7	10	10			

Schematic No. 1420473H. Input/Output PWA

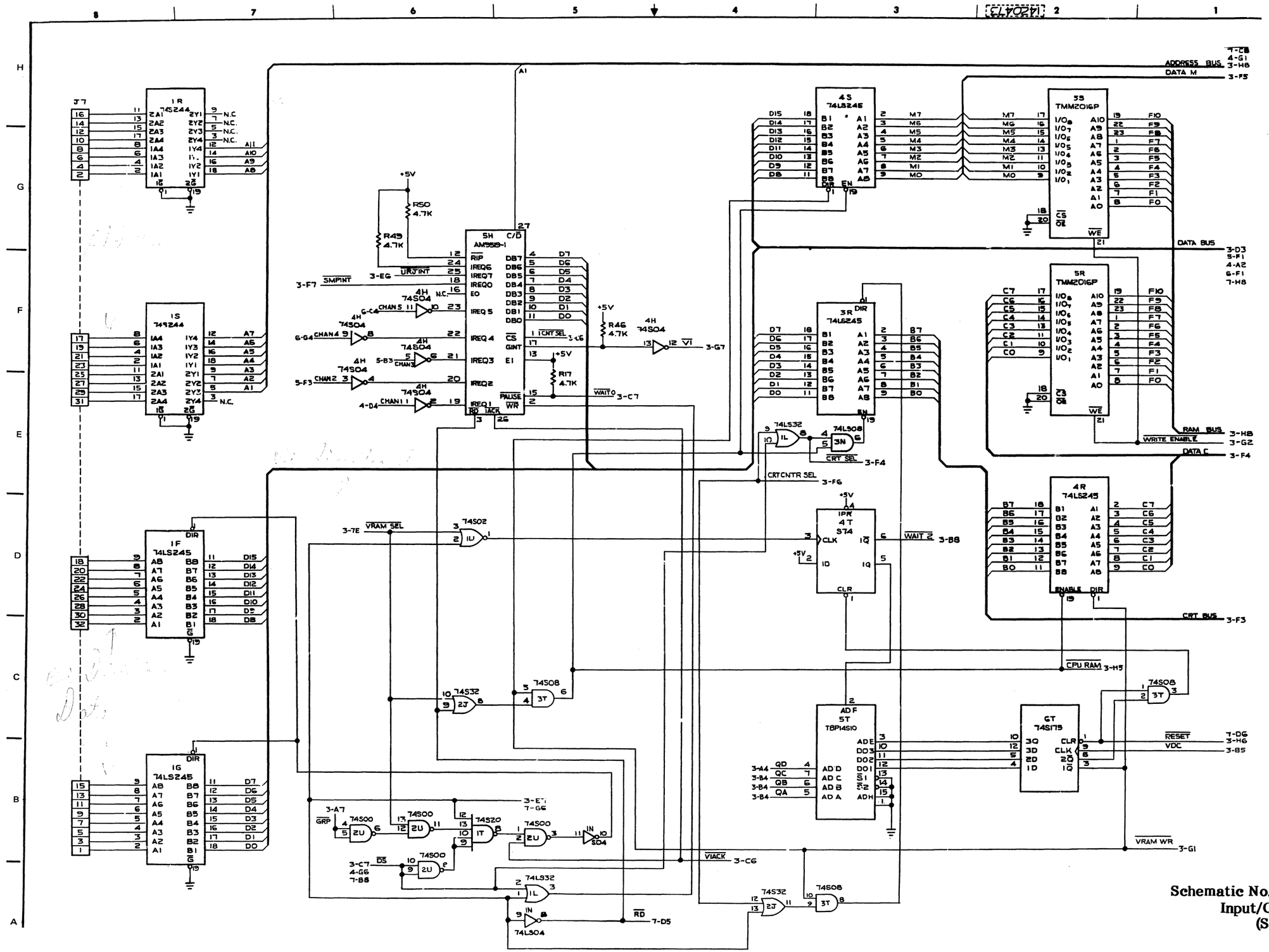

Schematic No. 1420473H.
Input/Output PWA
(Sheet 2 of 7)

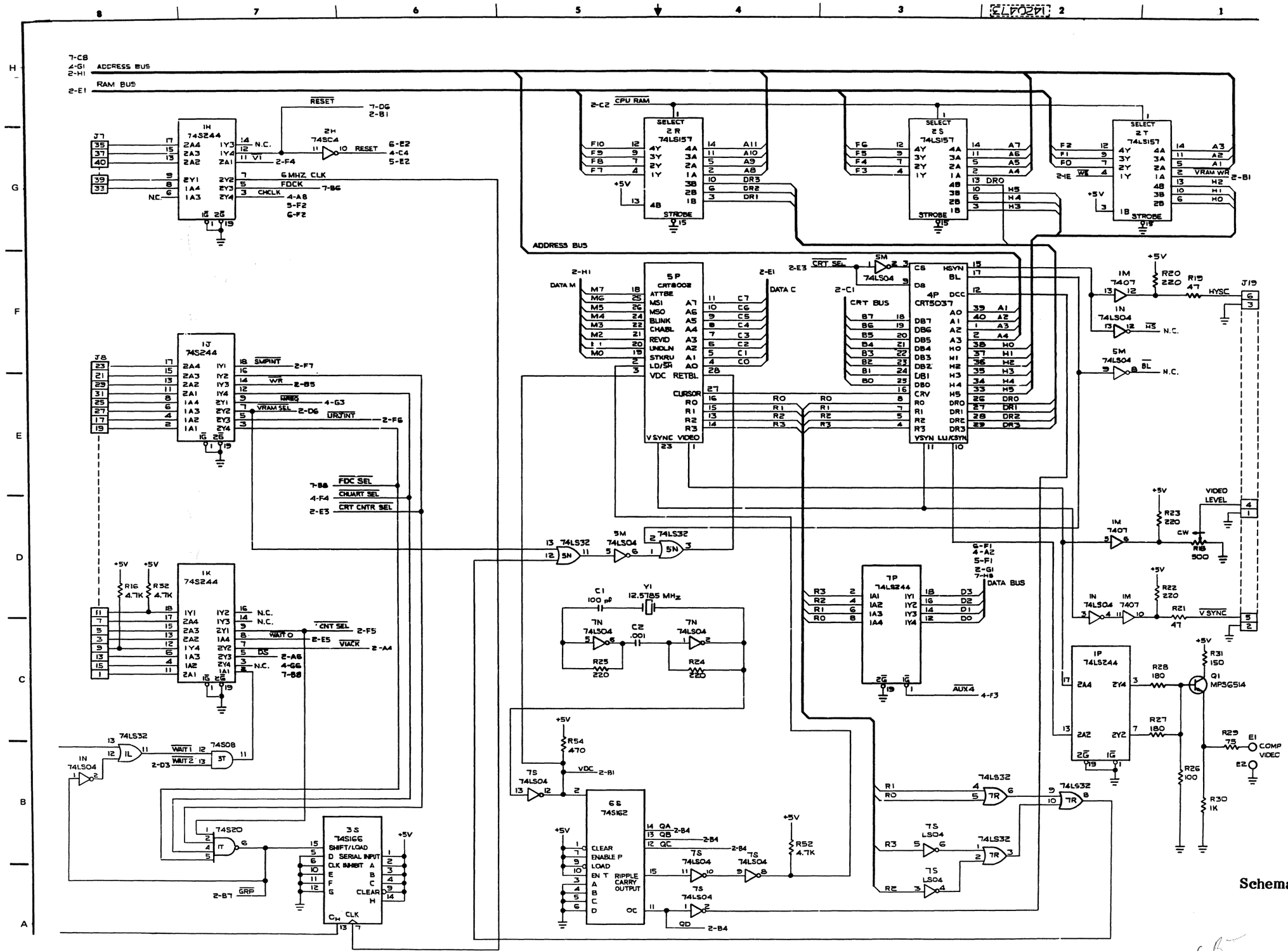

Schematic No. 1420473H.
Input/Output PWA
(Sheet 3 of 7)

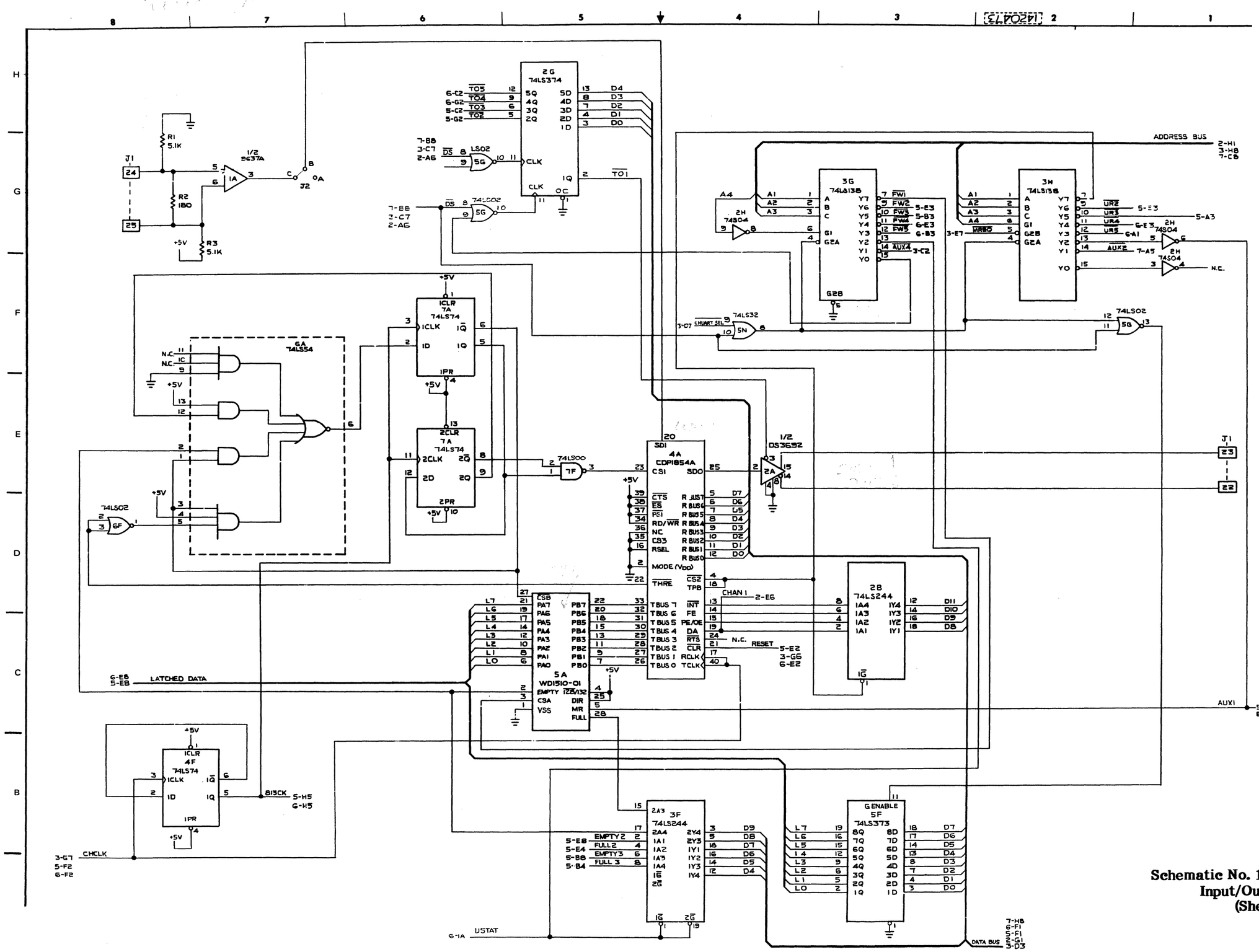

Schematic No. 1420473H.
Input/Output PWA
(Sheet 4 of 7)

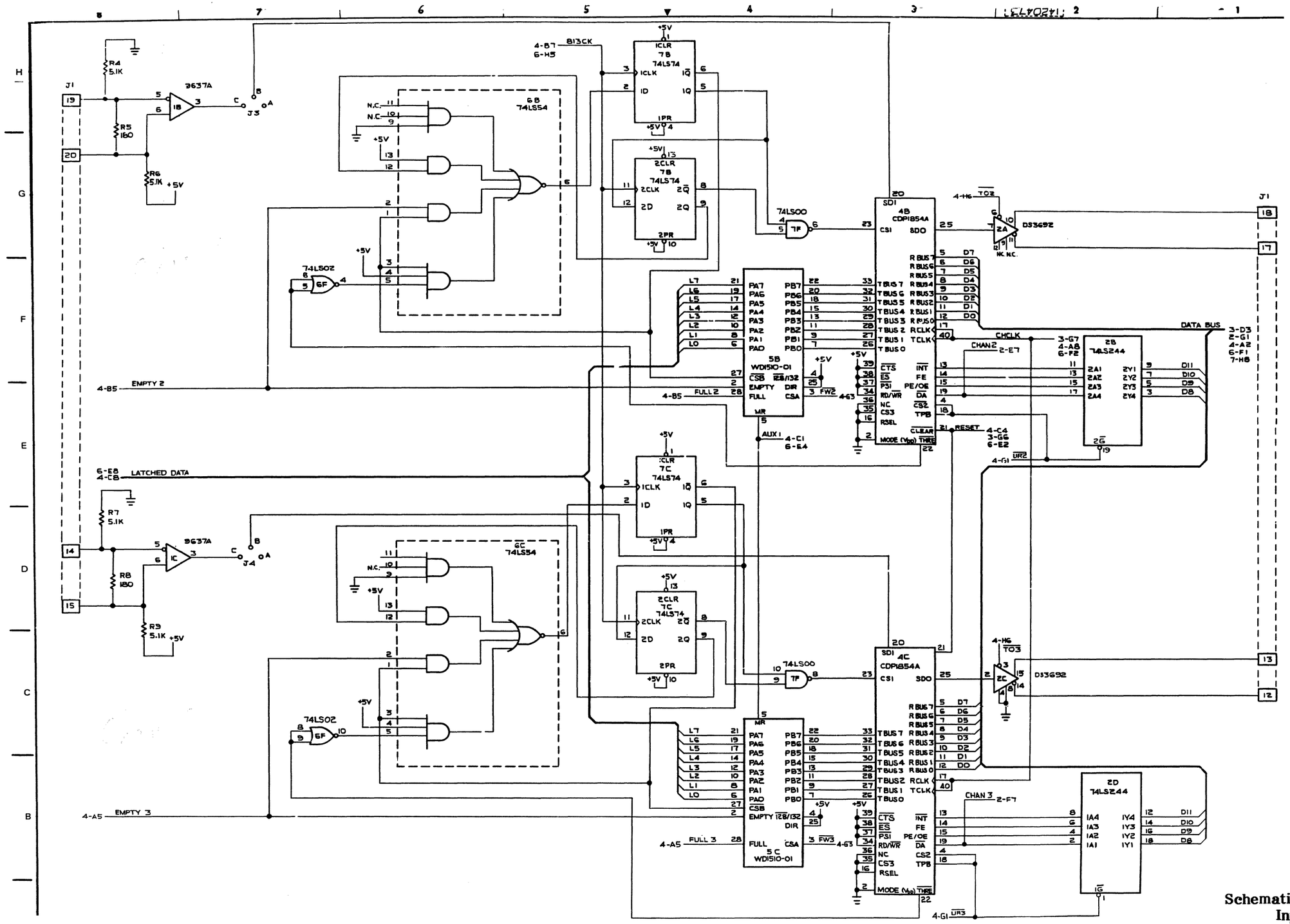

Schematic No. 1420473H.
Input/Output PWA
(Sheet 5 of 7)

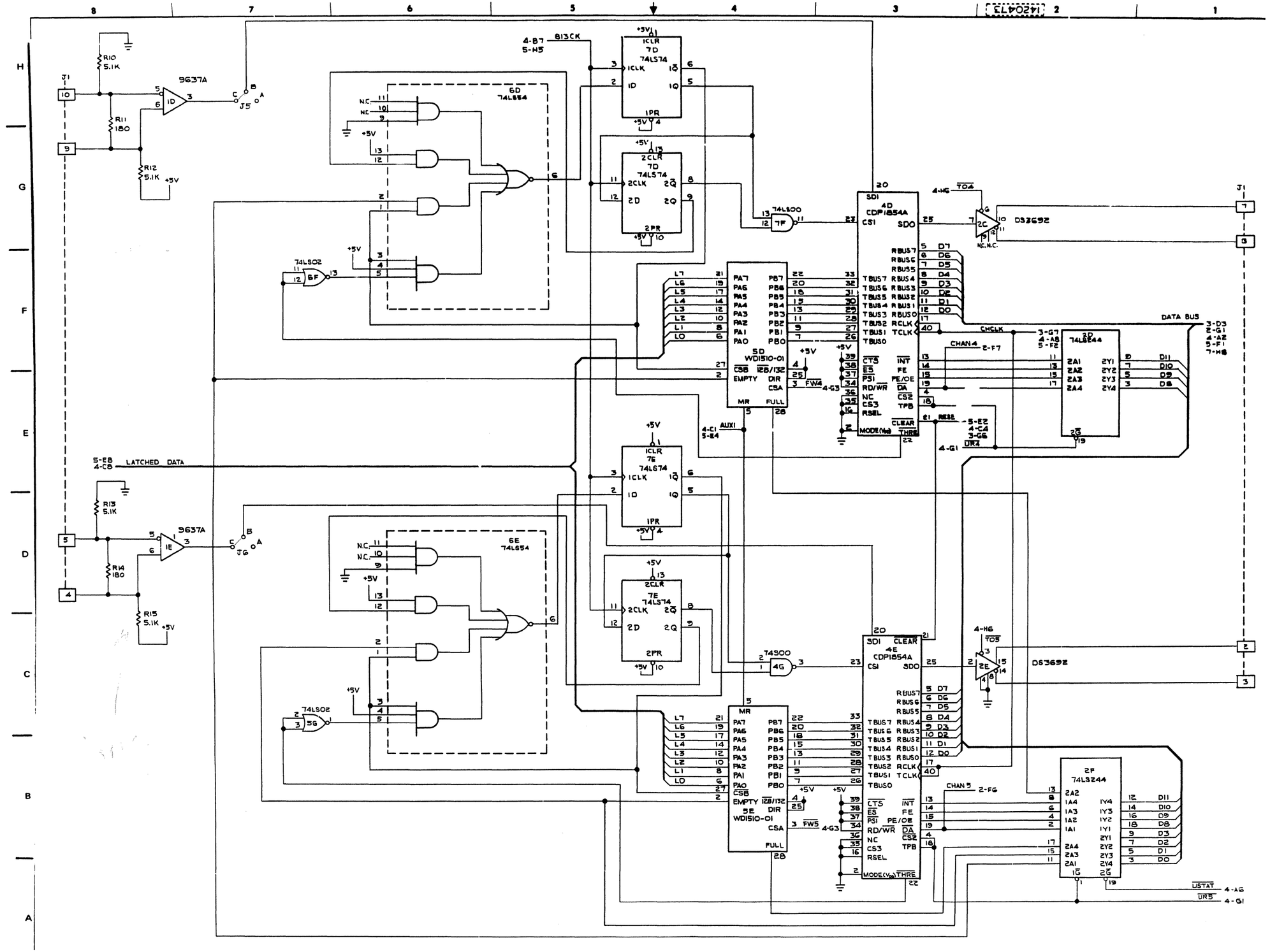

Schematic No. 1420473H.
Input/Output PWA
(Sheet 6 of 7)

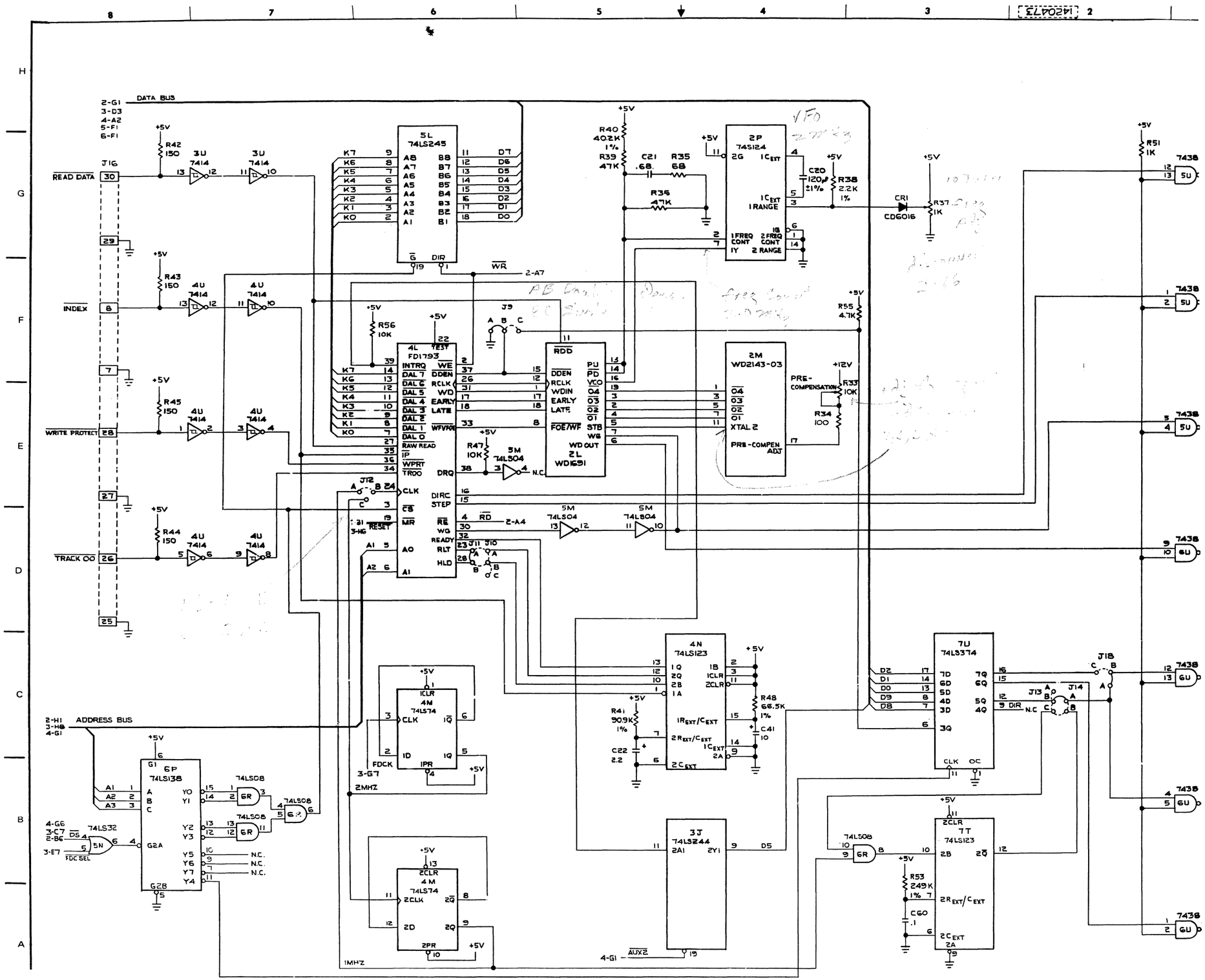

Ampex 1809623-04

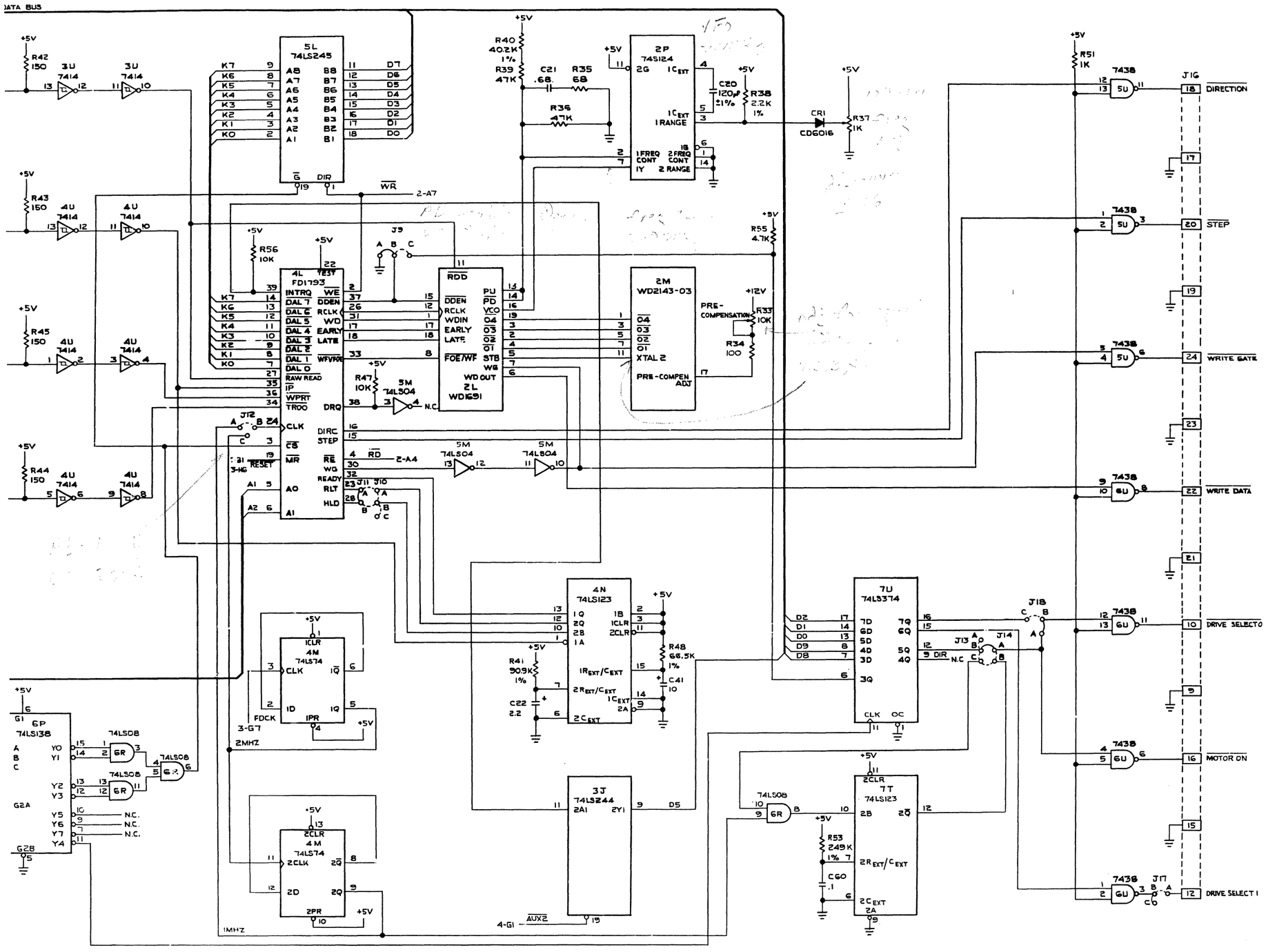

Schematic No. 1420473H.
Input/Output PWA
(Sheet 7 of 7)

ITEM NO.	PART NUMBER	DESCRIPTION	REF DESIG	QTY REQD PER DASH NUMBER -01	-02	-03	-04	-05
1				-01	-02	-03	-04	
2								
3	1420260	SCHEMATIC		A	B	C	D	F
4								
5	037-965	CAPACITOR, TANT., 120uF, 10V, 20%	C1	1	1	1	1	1
6	037-940	CAPACITOR, TANT., 47uF, 35V, 20%	C2	1	2	2	2	2
7	064-653	CAPACITOR, CER., .1uF, 50V, 20%	C3,4	2	2	2	2	2
8								
9	135-377	HEADER ASSY, 4 POSTS AMP 87633-4	J8	1	1	1	1	1
10	135-168	HEADER ASSY, 26 PIN AMP 87586-9	J4,12	2	2	2	2	2
11	140-647	CONNECTOR, RECEPT, 9 SOC AMP 208002-2	J1-3,5,6, 11,13	7	7	7	7	7
12	177-013	CONNECTOR, RECEPT, 15 SOC AMP 208066-2	J9,10	2	2	2	2	2
13	140-708	CONNECTOR, RECEPT, 25 SOC AMP 208081-4	J7	1	1	1	1	1
14								
15	076-062	RESISTOR, C.F., 2 MEG OHMS, 1/4W, ±5%	R1	1	1	1	1	1
16								
17	187-397	TERMINAL, QUICK DISCONNECT, MALE	E1	1	1	1	1	1

LM-1420258

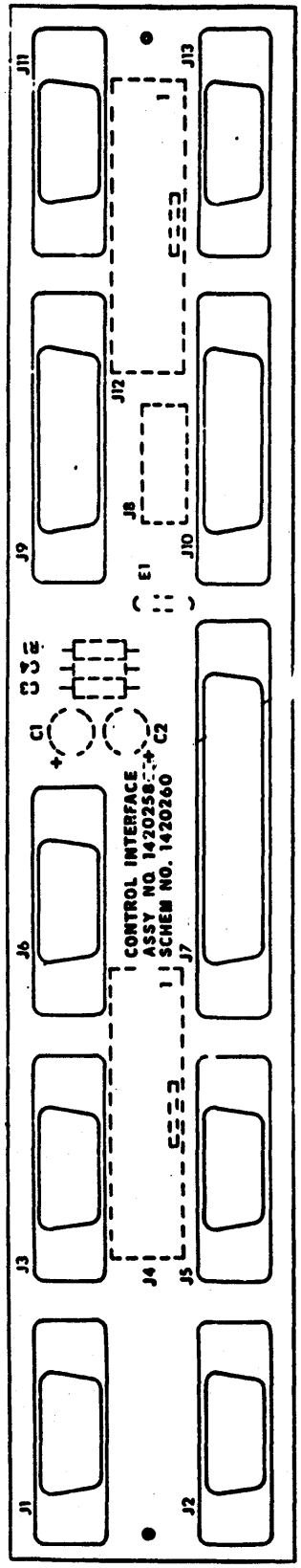

Assembly No. 1420258-05M. Control Interface PWA

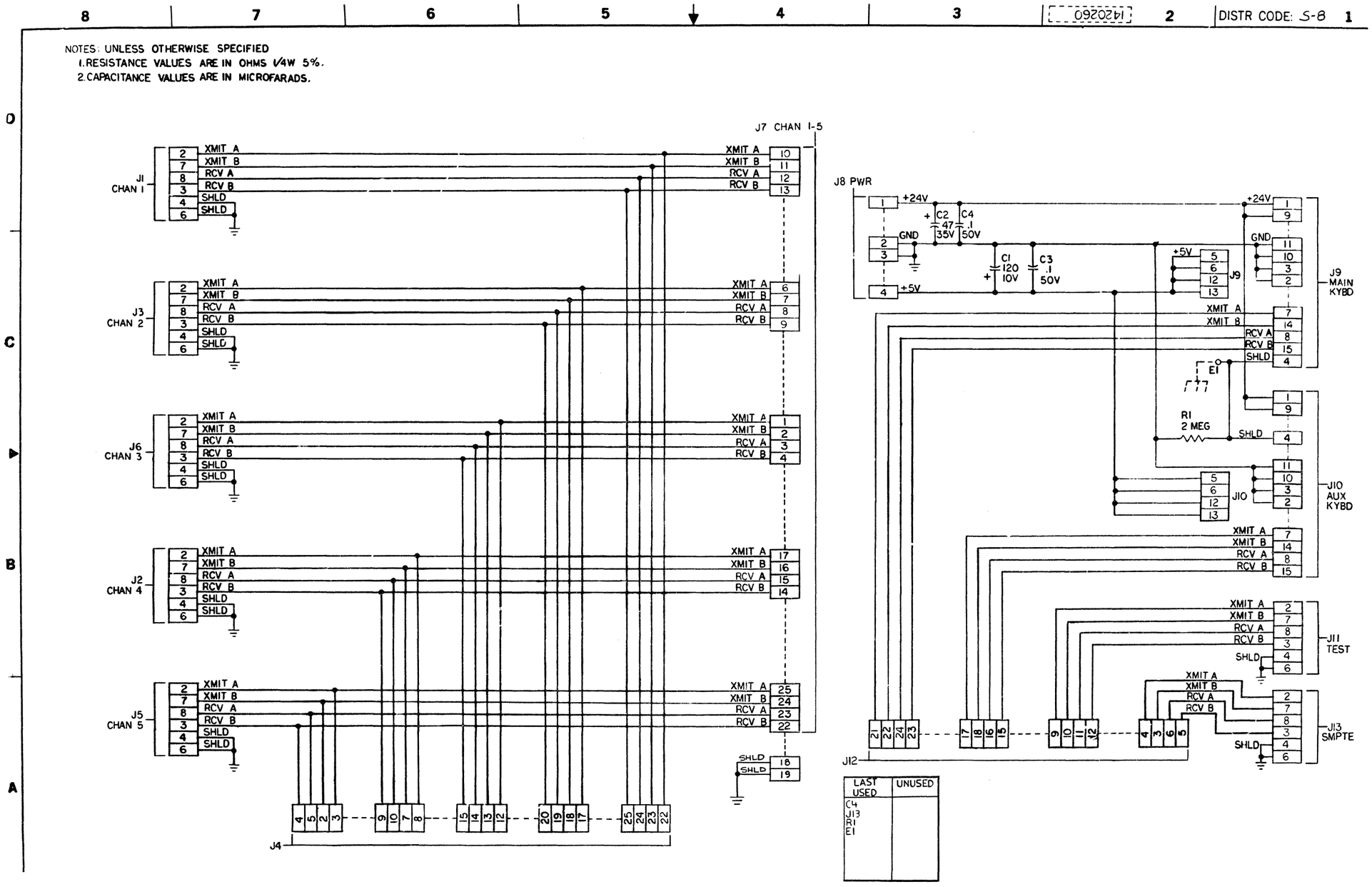

Schematic No. 1420260F.
Control Interface PWA

WIRE ROUTING LIST					
WIRE NO.	GAUGE COND	FROM		TO	
		REF DES	TERM	REF DES	TERM
1	18/9	J1	M	S1	5
2	/10		H	S1	2
3	/9		N	TB2	5
4	/9		P	TB2	2
5	/10		R	TB2	4
6	/10		S	TB2	1
7	/5	J1	GND	TB1	3
8	/5	TB2	3	TB1	3
9	/9	S1	4	TB1	2
10	/10	S1	1	TB1	1
11	18/5	J1	GND	E1	—

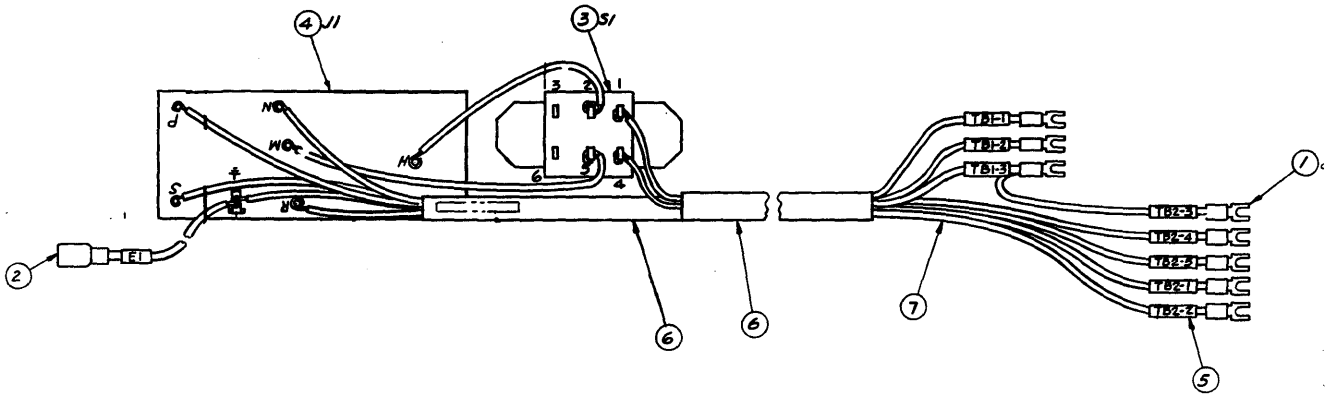

(-)	8	1420432	WIRING DIAGRAM		
AR	7		WIRE, STRANDED, INSULATED, 18 AWG		
AR	6		SLEEVING, TFE, FLEXIBLE		
AR	5		SLEEVING, SHRINKABLE		
1	4	145-703	CONNECTOR, POWER CIRCUIT, RECPT OUTLET		J1
1	3	119-825	SWITCH, ROCKER, DPDT		S1
1	2	171-238	TERMINAL, QUICK DISCONNECT, FEM, 22-18 AWG		E1
8	1	171-004	TERMINAL LUG, CRIMP, #6 STUD, 16-14 AWG		
01	ITEM NO	PART NUMBER		DESCRIPTION	
		PARTS LIST			

Assembly No. 1420433-01C. AC Chassis Cable Assembly

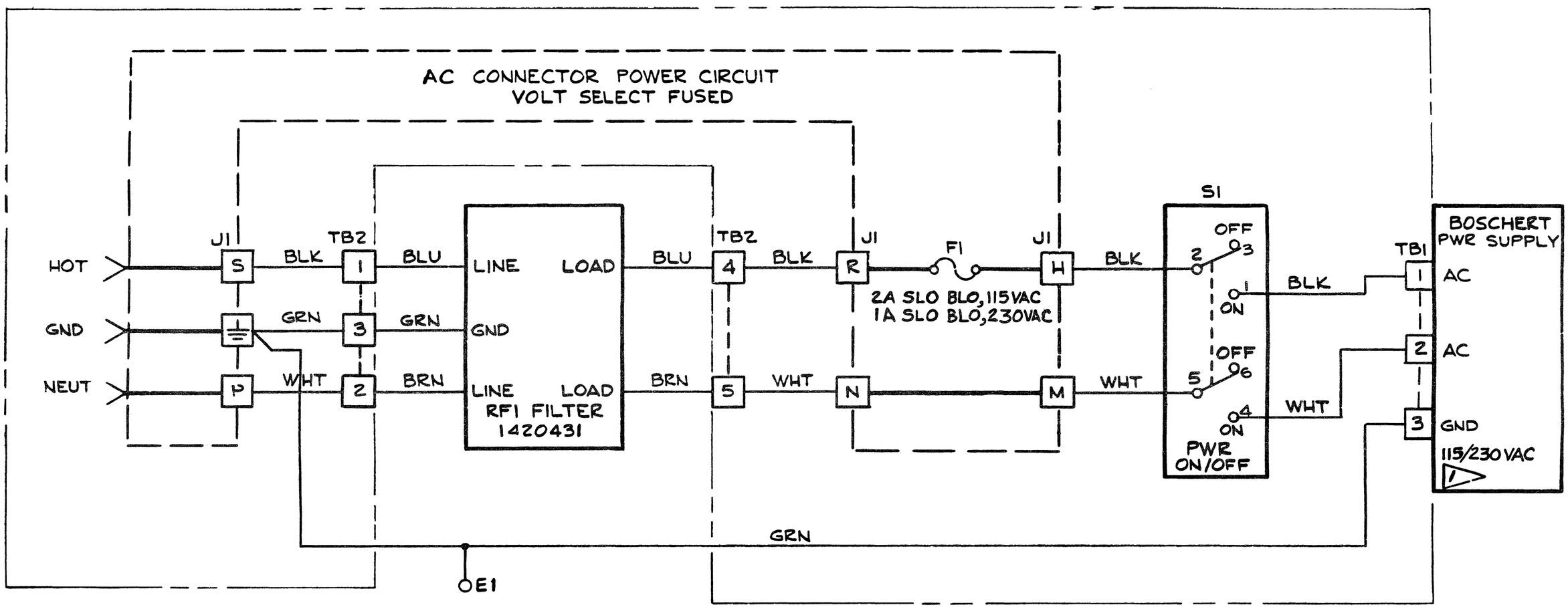

NOTES:

1. CUT JUMPER JP1 OF POWER SUPPLY FOR 230V OPERATION.

Wiring Diagram No. 1420432B.
AC Cable Assembly

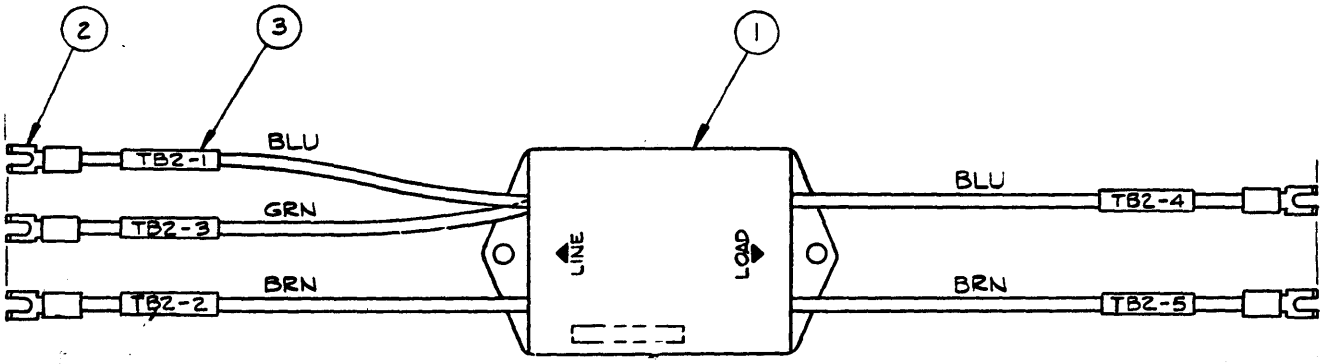

AR	3		SLEEVING, SHRINKABLE		
5	2	171-004	TERMINAL LUG, CRIMP, 6 STUD, 16-14 AWG WIRE		
1	1	052-260	FILTER, LINE, 50/60 Hz, 3A, 115 VAC		
-01	ITEM NO.	PART NUMBER		DESCRIPTION	
	PARTS LIST				

Assembly No. 1420431-01C. RFI Filter

WIRE LEAD LIST

WIRE NO.	GAUGE/ COND	FROM REF DES	FROM TERM	TO REF DES	TO TERM	REMARKS
1	18/0	P15	1	TB1	7	CRIMP WIRES TOGETHER AT TB1
2	↓	P4	2	↓	7	
3		P2	2		7	
4	18/0	P8	2		7	
5	18/6	P15	3		9	
6	18/6	P4	4		9	
7	18/3	P15	4		10	
8	18/3	P4	5		10	
9	18/3	P2	4		10	
10	18/3	P8	4		10	
11	18/2	P15	6	↓	5	
12	18/2	P2	1	TB1	5	
13	18/1	P8	1	—	—	TIE TO VR1 ANODE AT FINAL ASSY LEVEL
14	18/9	P15	2	TB1	8	CRIMP WIRES TOGETHER AT TB1
15	18/9	P4	3	↓	8	
16	18/9	P2	3		8	
17	18/9	P8	3		8	
18	18/7	P15	5		11	
19	18/7	P4	6	↓	11	
20	18/4	P4	1	TB1	6	TIE TO VR1 CATHODE AT FINAL ASSY LEVEL
21	18/4	TB1	6	—	—	

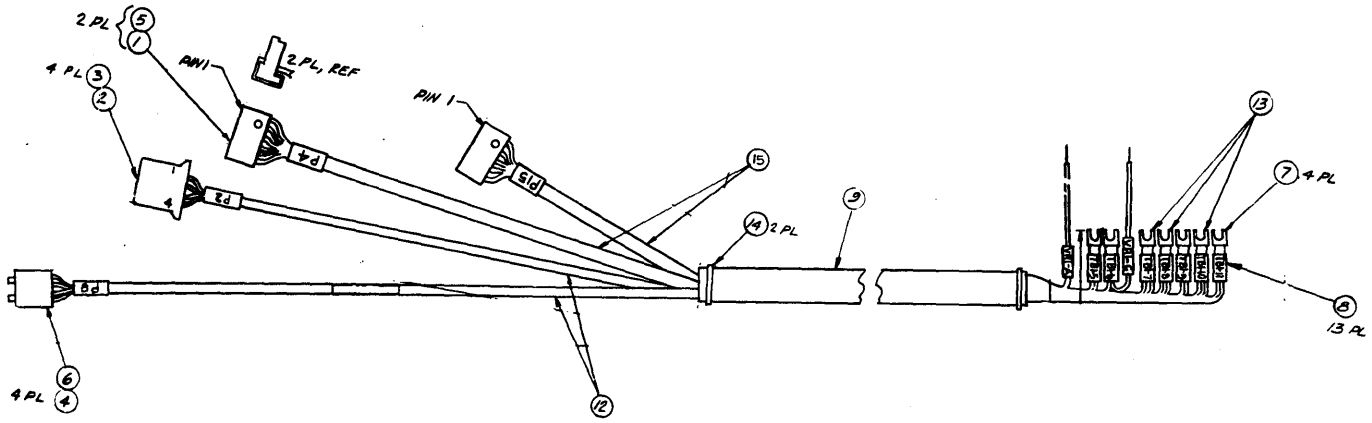

AR	15	600-043	SLEEVING, PVC, FLEXIBLE, .330 I.D., BLK.		
2	14	302-335	STRAP, CABLE		
3	13	172-394	TERMINAL, LUG, CRIMP, #6, 12-10 AWG		
AR	12	600-009	SLEEVING, PVC, FLEXIBLE .208 ID BLK		
—	11	600-007	SLEEVING, PVC, FLEXIBLE .263 ID BLK		
AR	10		WIRE, STRANDED, INSULATED, 18 AWG		
AR	9	600-056	SLEEVING, PVC, FLEXIBLE, .625 ID, BLK		
AR	8		SLEEVING, SHRINKABLE		
4	7	171-004	TERMINAL LUG, CRIMP, #6 STUD, 16-14 AWG		
1	6	177-118	CONN PART, BODY, RECPT, RECT, 4 POS		P8
2	5	167-952	CONN PART, COVER		P4, 15
4	4	167-730	CONN PART, CONTACT, SPRING, 18-22 AWG		REF: P8
4	3	166-699	CONN PART, CONTACT,		REF: P2
1	2	166-607	CONN PART, PLUG, RECT, 4 POS		P2
2	1	177-236	CONN, RECPT, W/6 CONT		P4, 15
QT	ITEM NO.	PART NUMBER		DESCRIPTION	

Assembly No. 1420434-01F. DC Power Harness

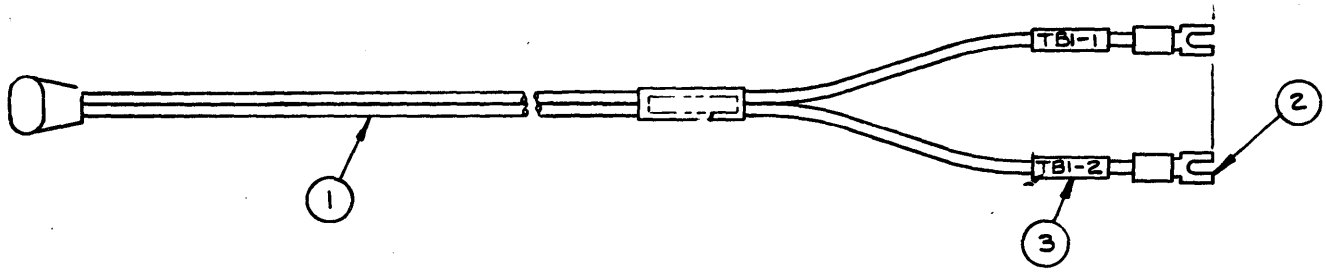

AR	3		SLEEVING, SHRINKABLE		
2	2	171-004	TERMINAL LUG, CRIMP, 6 STUD, 16-14 AWG WIRE		
1	1	591-140	FAN PART, CORD SET		
-01	ITEM NO.	PART NUMBER		DESCRIPTION	

Assembly No. 1420435-01C. AC Fan Cord

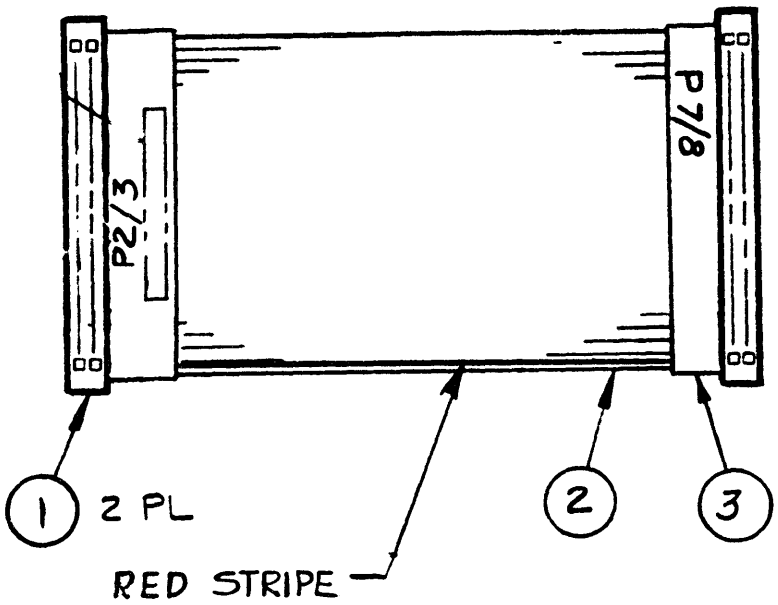

AR	3		SLEEVING, SHRINKABLE		
AR	2	636-017	CABLE, RIBBON 40 CONDUCTORS, 28 AWG		
2	1	140-563	CONNECTOR, FLAT CABLE, 40 SPRING CONT.		
-01	ITEM NO.	PART NUMBER		DESCRIPTION	
	PARTS LIST				

Assembly No. 1420437-01D. Ribbon Signal Interconnect Cable Assembly

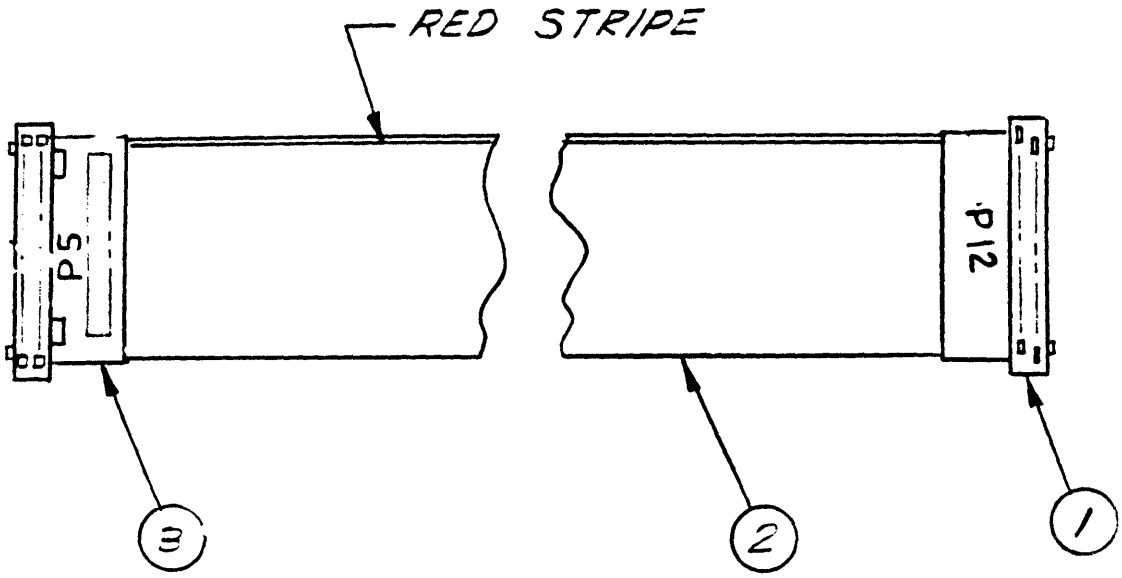

A/R	3		SLEEVING, SHRINKABLE		
A/R	2	636-016	CABLE, RIBBON, 26 COND., 28 AWG.		
2	1	140-328	CONN., SIGNAL CIRCUIT, 26 CONT. W/COVER		
01	ITEM NO.	PART NUMBER		DESCRIPTION	
		PARTS LIST			

Assembly No. 1420439-01D. Control Processor Cable

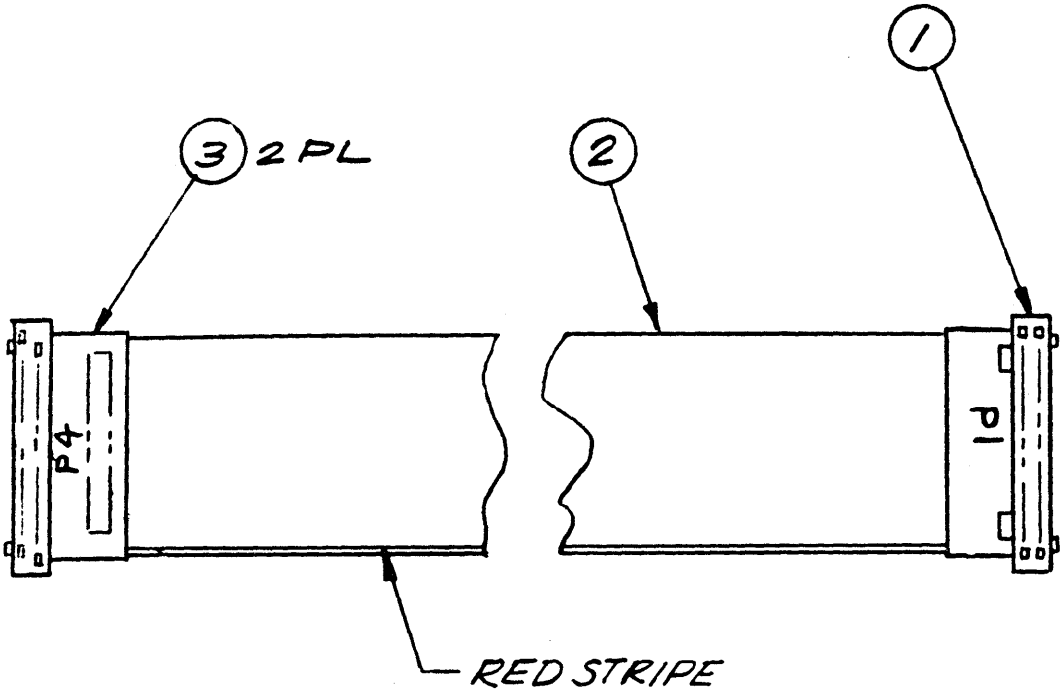

A/R	3		SLEEVING, SHRINKABLE		
A/R	2	636-016	CABLE, RIBBON, 26 COND., 28 AWG.		
2	1	140-328	CONN., SIGNAL CIRCUIT, 26 CONT., W/COVER		
01	ITEM NO.	PART NUMBER		DESCRIPTION	
		PARTS LIST			

Assembly No. 1420440-01D. Input/Output Cable Assembly

WIRE ROUTING LIST				
WIRE NO	COND	FROM REF DES	TO REF DES	REMARKS
1	CTR COND	J2	E1	
	SHLD	J2	E2	ATTACH ITEM 6 TO SHLD

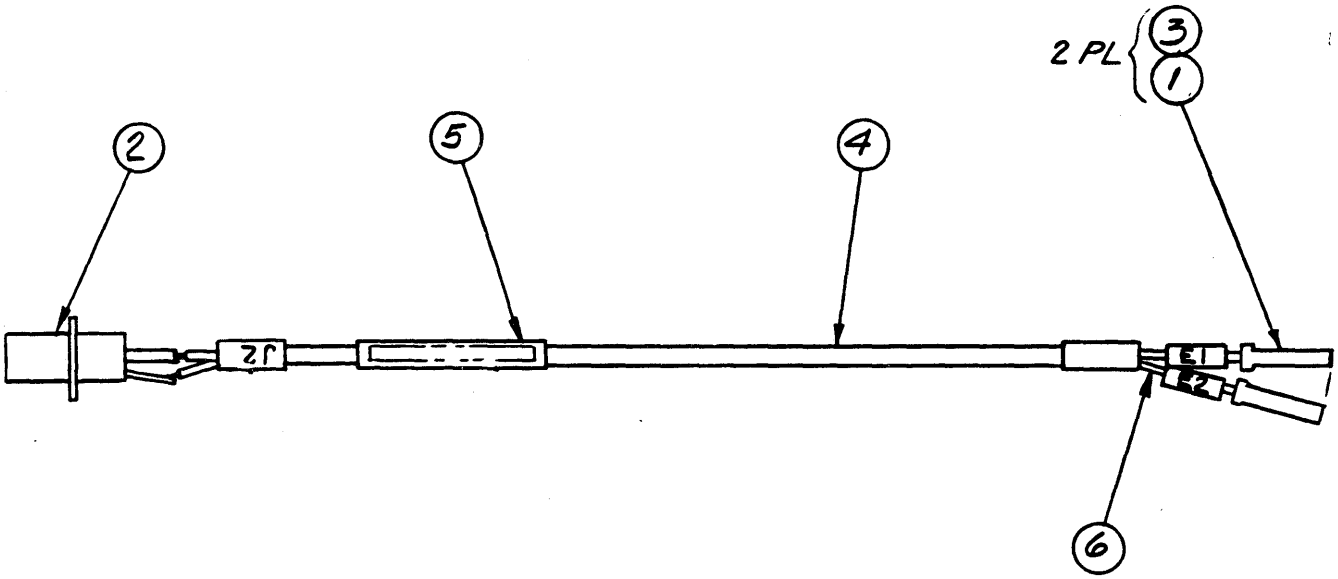

AR	6		WIRE, STRANDED, INSULATED, 24 AWG		
AR	5		SLEEVING, SHRINKABLE		
AR	4	616-569	CABLE, COAX, SINGLE CKT, 75 OHM		
2	3	167-227	CONN PART, CONTACT, SPRING, 26-22 AWG		
1	2	139-918	CONN, SIGNAL CKT, RECPT, RF, BNC		
2	1	139-747	CONN PART, BODY, PLUG, RECTANGULAR, 1 POS		
01	ITEM NO.	PART NUMBER		DESCRIPTION	
		PARTS LIST			

Assembly No. 1420207-01C. Video Out Cable Assembly

WIRE ROUTING LIST					
WIRE NO.	GAUGE	FROM		TO	
		REF DES	TERM	REF DES	TERM
1	24	J3	1	P10	1
2	24	J3	2	P10	2
3	24	J3	3	P10	3
4	24	J3	4	P10	4

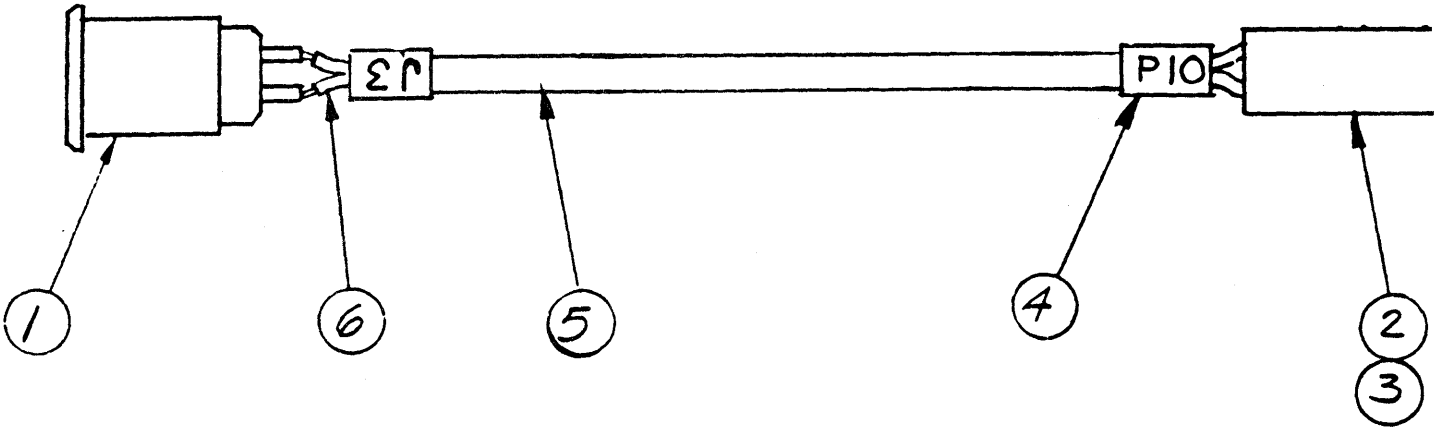

AR	6		WIRE, STRANDED, INSULATED, 24 AWG		
AR	5	600-011	SLEEVING, PVC, FLEXIBLE, BLK		
AR	4		SLEEVING, SHRINKABLE		
1	3	167-702	CONNECTOR PART, BODY, PLUG, RECT, 6 POS		
4	2	167-688	CONNECTOR PART, CONTACT, SPRING, 24-20 AWG		
1	1	140-782	CONNECTOR, SIGNAL, RECPT, CIRC, 4 CONTACTS		
01	ITEM NO.	PART NUMBER		DESCRIPTION	
		PARTS LIST			

Assembly No. 1420208-01D. Remote Cable Assembly

ITEM NO.	PART NUMBER	D DESCRIPTION	REF DESIG	QTY REQD PER DASH NUMBER -01	-02
1	1420461-01	BRACKET, CRT ELECTRONICS		1	-
2	1420461-02	BRACKET, CRT ELECTRONICS		-	1
3					
4					
5	030-886	CAPACITOR, CERAMIC, .01uF, 1000V, ±20%	C1	1	1
6					
7	041-398	RESISTOR, FIXED, CARBON, .5W, 2.2M, 5%	R1	1	1
8					
9	173-709	TERMINAL STUD, TURRET, INT THD, 4-40		1	1
10	473-324	SCREW, PAN HD., SEM, 4-40 X .25 LG		5	5
11	473-325	SCREW, PAN HD., SEM, 4-40 X .312 LG		4	4
12					
13					
14	501-008	WASHER, PLAIN #4, SMALL PATTERN		5	5
15	501-169	WASHER, PLAIN #4		4	4
16					
17					
18	545-299	CRT MONITOR, 9"		1	1
19					
20					
21		WIRE, INSULATED, STRANDED, 20 AWG		A/R	A/R
22		SLEEVING, POLYOLEFIN, SHRINKABLE		A/R	A/R

LM-1420477

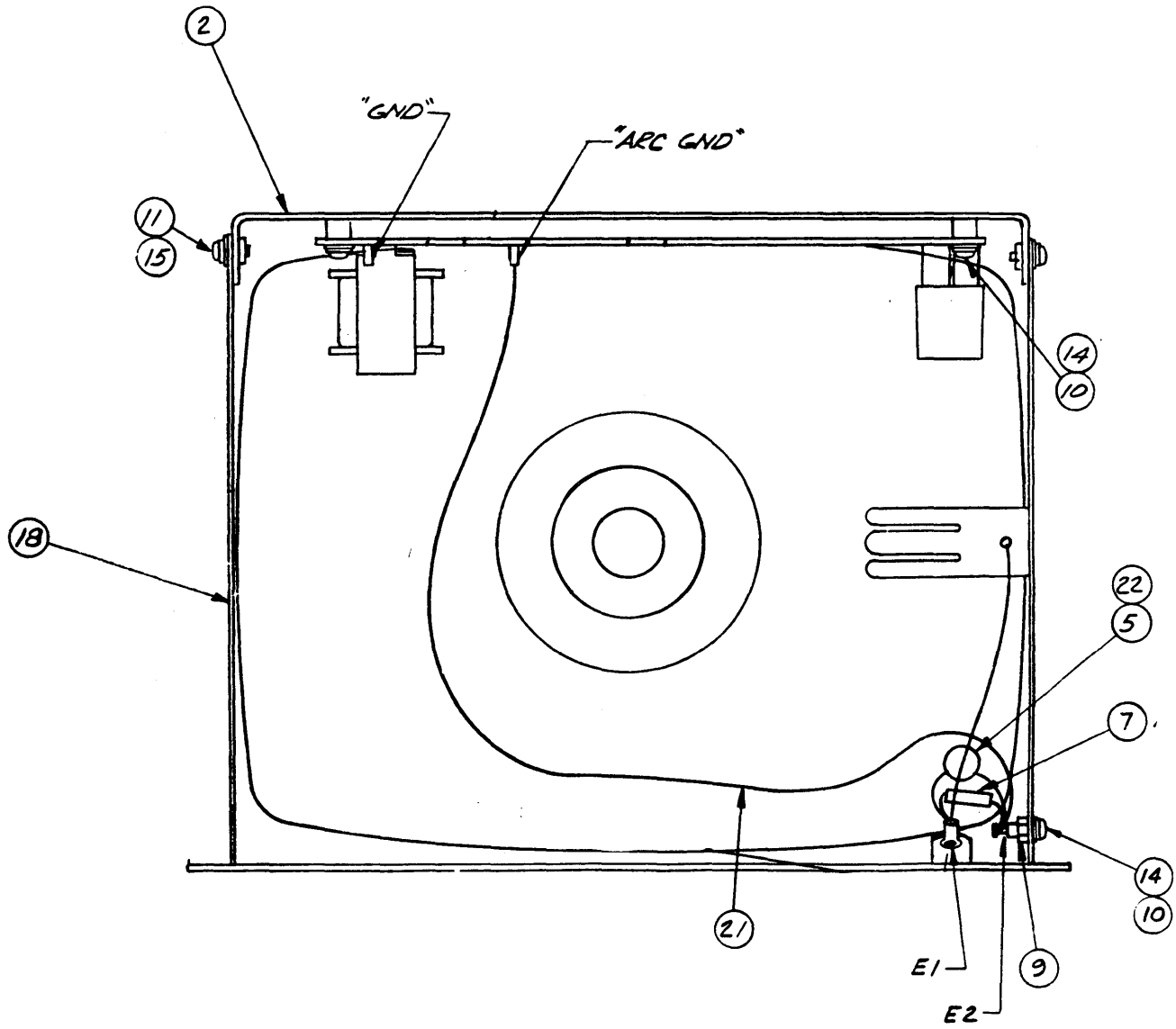

Assembly No. 1420477-02E. CRT Monitor Modification Assembly

WIRE ROUTING LIST						
WIRE NO.	GAUGE/ COND	FROM		TO		REMARKS
		REF DES	TERM	REF DES	TERM	
1	18/0	J1	1,A	TB1	7	
2	18/2		7,H	TB1	5	
3	24/3		3,C	R1	1	
4	24/4		4,D	R1	2	
5	24/1		2,B	R1	3	
6	COND		8,J	P19	4	
	SHLD		10,L	P19	1	ATTACH ITEM 11 TO SHLD
7	24/2		6,F	P19	6	TWISTED PAIR
8	24/0		10,L	P19	3	
9	24/6		9,K	P19	5	TWISTED PAIR
10	24/0	J1	10,L	P19	2	

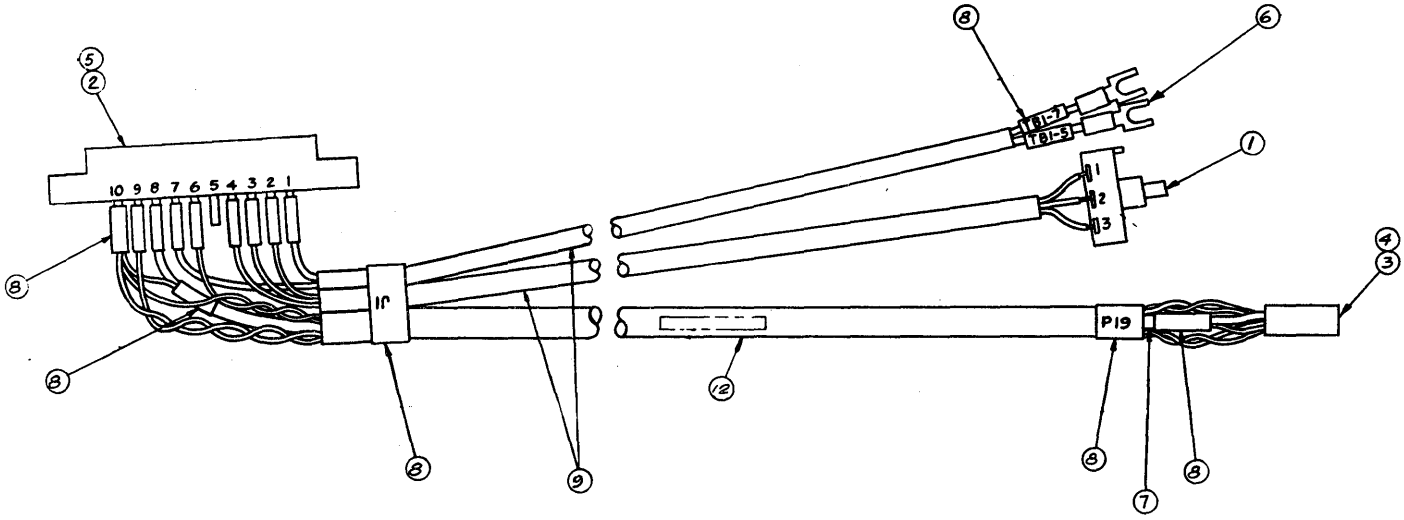

AR	12	600-007	SLEEVING, P.V.C. FLEXIBLE, .263 I.D., BLK.		
AR	11		WIRE, STRANDED, INSULATED, 24 AWG		
AR	10		WIRE, STRANDED, INSULATED, 18 AWG		
AR	9	600-009	SLEEVING, P.V.C, FLEXIBLE, .208 I.D., BLK		
AR	8		SLEEVING, SHRINKABLE		
AR	7	616-569	CABLE, COAX, SINGLE CKT, 75 OHM		
2	6	171-004	TERMINAL LUG, CRIMP SPADE, #6 STUD, 22-18 AWG		
1	5	169-318	CONNECTOR PART, KEY, POLARIZING		
1	4	167-702	CONNECTOR PART, BODY, PLUG, RECT, 6 POS		
6	3	167-688	CONNECTOR PART, CONTACT, SPRING, 24-20 AWG		
1	2	143-199	CONNECTOR, SIGNAL CKT, RECPT, PC, 10 DUAL		
1	1	075-352	RESISTOR, VARIABLE, 2 WATT, 100K OHM		
01	ITEM NO	PART NUMBER		DESCRIPTION	
		PARTS LIST			

Assembly No. 1420436-01D. CRT Cable Assembly

ITEM NO.	PART NUMBER	DESCRIPTION	REF DESIG	QTY REQD PER DASH NUMBER -01
1	1464542-04	PWA, INPUT VIDEO PROCESSOR, NTSC		1
2	1465014	INSTRUCTIONS		1
3				
4				
5	1465041-01	PROM ASSEMBLY, OUTPUT CONTROL, 002-887 27S191 5K		1
6	1465042-01	PROM ASSEMBLY, OUTPUT CONTROL, 000-038 87S181 5M (1)		1
7	1465612-01	PROM ASSEMBLY, OUTPUT CONTROL, 87S181 5K (1)		1

REFERENCE PAGE 3-149 for FOR INPUT VIDEO PROCESSOR PWA, NTSC ASSEMBLY NO. 1464542

NOTES:

(1) STATIC SENSITIVE DEVICE, SPECIAL HANDLING REQUIRED PER AMPEX STD HE1-1.

LM-1464978

ITEM NO.	PART NUMBER	DESCRIPTION	REF DESIG	QTY REQD PER DASH NUMBER -01
1	1464292-02	PWA, A/D CONVERTER, GP KEY		1
2	1464989-01	PWA, KEY INTERPOLATOR		1
3	1465015	INSTRUCTIONS		1
4	1465065-01	PIN, REGISTRATION		3
5	280-159	SPACER, THREADED, PLAIN, 4-40 X .375 LG		4
6	473-324	SCREW, PAN HD., W/ASSEM WASHER, 4-40 X .250 LG		11
7	501-169	WASHER, SM. PATT., #4		11

REFERENCE PAGE 3-1 FOR A/D CONVERTER DIGI-MATTE PWA, A1 ASSEMBLY NO. 1464292

REFERENCE PAGE 3-178 FOR KEY INTERPOLATOR PWA ASSEMBLY NO. 1464989

LM-1464980

ITEM NO.	PART NUMBER	DESCRIPTION	REF DESIG	QTY REQD PER DASH NUMBER -01
1	1464996-03	PWA, INPUT VIDEO PROCESSOR, PAL		1
2	1465014	INSTRUCTIONS		1
3				
4	1465058-01	PROM ASSY, OUTPUT CONTROL, 002-887 27S191 5K		1
5	1465059-01	PROM ASSY, OUTPUT CONTROL, 000-038 87S181 1 5M		1
6	1465614-01	PROM ASSY, OUTPUT CONTROL, 87S181 1 5K		1

REFERENCE PAGE 3-173 FOR INPUT VIDEO PROCESSOR PWA, A1, PAL ASSEMBLY NO. 1464996

NOTES:

1 STATIC SENSITIVE DEVICE, SPECIAL HANDLING REQUIRED PER AMPEX STD HE1-1.

LM-1465054

ITEM NO.	PART NUMBER	DESCRIPTION	REF DESIG	QTY REQD PER DASH NUMBER -01
1	1464292-02	PWA, A/D CONVERTER, GP KEY		1
2	1464989-01	PWA, KEY INTERPOLATOR		1
3	1465015	INSTRUCTIONS		1
4	1465065-01	PIN, REGISTRATION		3
5	280-159	SPACER, THREADED, PLAIN, 4-40 X .375 LG		4
6	473-324	SCREW, PAN HD., W/ASSEM WASHER, 4-40 X .250 LG		11
7	501-169	WASHER, SM. PATT., #4		11

REFERENCE PAGE 3-1 FOR A/D CONVERTER DIGI-MATTE PWA, A1, (OPTION) ASSEMBLY NO 1464292

REFERENCE PAGE 3-178 FOR KEY INTERPOLATOR PWA, ASSEMBLY NO. 1464989

LM-1465056

ITEM NO.	PART NUMBER	DESCRIPTION	REF DESIG	QTY REQD PER DASH NUMBER -01	-02
1	1420229-01	LENS		1	1
2	1420438-01	DISK DRIVE, CABLE ASSY		1	1
3	1420443-01	BRACKET, DISK DRIVE		1	-
4	1420462-02	INSULATOR, DISK DRIVE		1	1
5	1420482-01	FLOPPY DISK DRIVE MODIFICATION		1	1
6	1465156-02	BRACKET, DISK DRIVE			1
7					
8					
9					
10	160-346	DISK, FLOPPY, SINGLE SIDED		10	10
11					
12	473-263	SCREW, PAN HD., SEM, 6-32 X .312 LG		4	4
13	473-734	SCREW, PAN HD., SEM, 8-32 X .375 LG		3	3
14					
15					
16	501-009	WASHER, PLAIN, #6		4	4
17	501-205	WASHER, PLAIN, #8		3	3
18	503-012	WASHER, SHOULDER, #6		3	3

LM-1420203

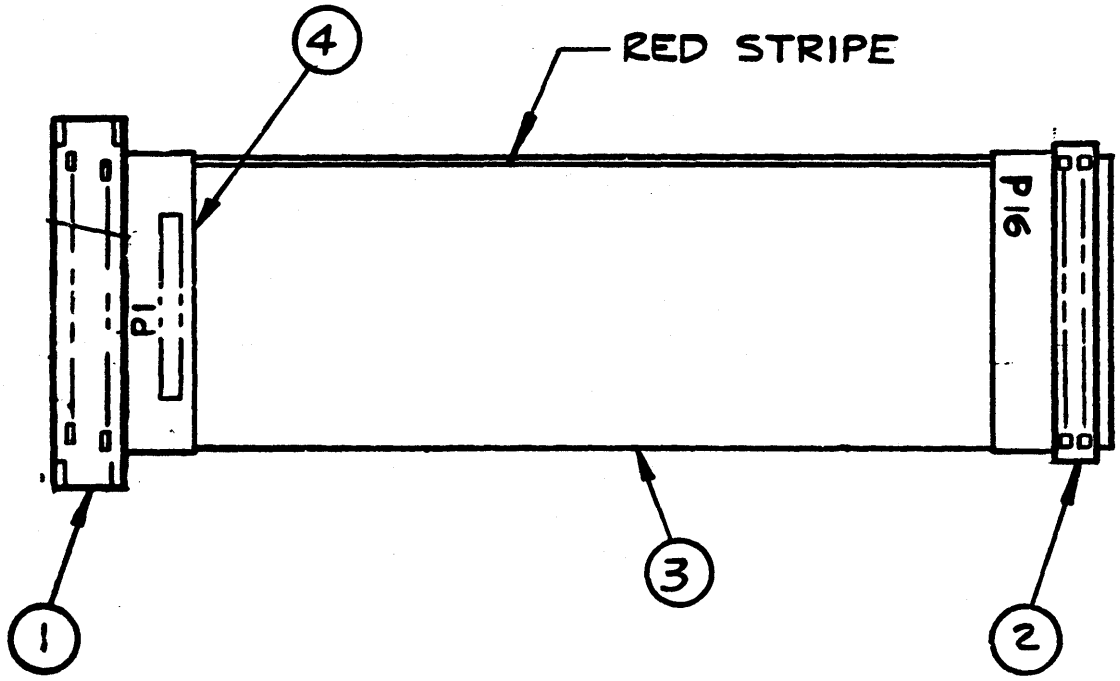

AR	4		SLEEVING, SHRINKABLE		
AR	3	636-018	CABLE, RIBBON, 34 CONDUCTORS, 28 AWG		
1	2	140-383	CONNECTOR, FLAT CABLE, 34 SPRING CONTACT		
1	1	140-233	CONNECTOR, FLAT CABLE, 34 PINS		
-01	ITEM NO.	PART NUMBER		DESCRIPTION	
		PARTS LIST			

Assembly No. 1420438-01A. Disk Drive Cable Assembly

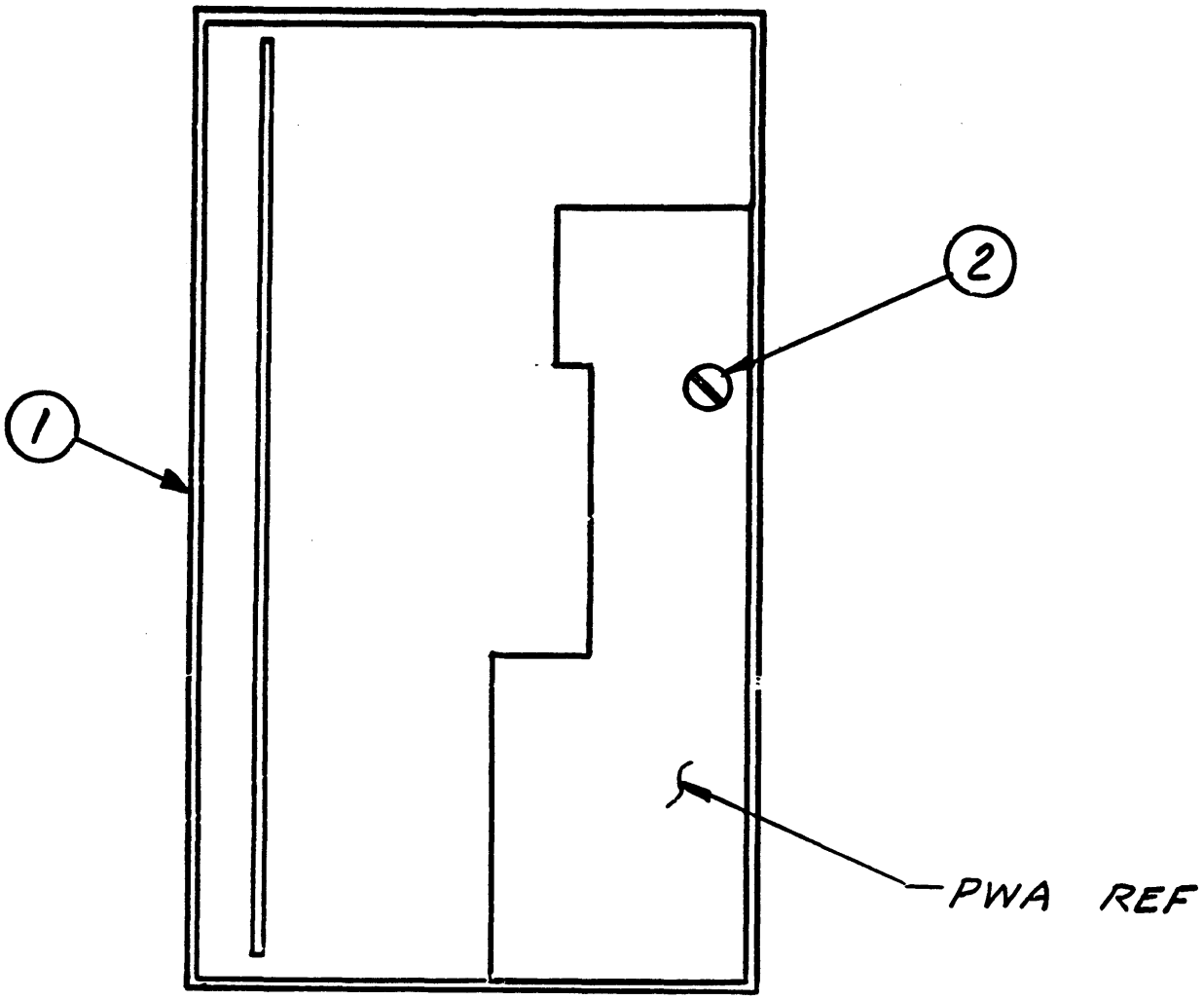

1	2	473-377	SCREW, BINDER HD, 6-32X.50 LG, NYLON		
1	1	160-334	DISK DRIVE, FLOPPY		
01	ITEM NO.	PART NUMBER		DESCRIPTION	
		PARTS LIST			

Assembly No. 1420482-01C. Floppy Disk Drive Modification

ITEM NO.	PART NUMBER	DESCRIPTION	REF DESIG	QTY REQD PER DASH NUMBER -01	-02
1	1409773-03	DIGITAL EXTENDER BOARD ASSY		1	1
2	1409899-02	ANALOG EXTENDER BOARD ASSY		1	1
3	1420244-01	CABLE, AC ASSY		1	-
4					
5	1499032	INSTRUCTION MANUALS LIST		REF	-
6					
7					
8					
9					
10					

LM-1420177

ITEM NO.	PART NUMBER	DESCRIPTION	REF DESIG	QTY REQD PER DASH NUMBER -01	-02	-03
1	1409637-01	CONNECTOR, .100 SPACING 50/50 WIRE WRAP		2	-	-
2	1409651-01	MOD. CARD GUIDE, EXTENDER BOARD		2	2	2
3	1409652-AA	ATTACHMENT; EXTENDER CARD GUIDE		1	1	1
4	1409652-AB	ATTACHMENT; EXTENDER CARD GUIDE		1	1	1
5	1409653-01	SUPPORT, EXTENDER BOARD ATTACHMENT		1	1	1
6	1409774-01	PWB, EXTENDER BOARD		1	-	-
7	1462933-01	MOD. CARD GUIDE. (FRONT)		2	2	2
8	1462964-01	BRACKET, STIFFENER		2	-	-
9	1462964-02	BRACKET, STIFFNER			2	2
10	140-730	CONNECTOR, .100 SPACING, 50 POS (DUAL)			2	2
11	496-004	NUT, KEP		12	12	12
12	1409774-02	PWB. EXTENDER BOARD			1	-
13	1409997-AB	STIFFENER, PWB			-	1
14	1409976-AB	INSULATOR, PWB			-	1
15	471-061	SCREW, MACHINE, PAN HEAD, 4-40-UNC-2A X .312 LG		6	6	9
16	471-065	SCREW, MACHINE, PAN HEAD 4-40-UNC-2A X .625 LG		6	6	6
17	475-085	SCREW, SEMI, 6-32-UNC-2A X .312 LG		2	2	2
18	476-271	SCREW, TAPPING PAN HEAD, 6-20 X .375 LG		10	10	10
19						
20	501-008	WASHER PLAIN #4		6	6	6
21	503-993	WASHER, PLAIN, NYLON, #4			-	3
22	493-005	NUT, HEX, 4-40 NYLON LOCK			-	3
23						
24						
25	187-354	TERMINAL PUSH-IN		163	163	163
26						
27					-	
28						
29						
30						
31						
32						
33						
34						
35						
36						
37						

LM-1409773

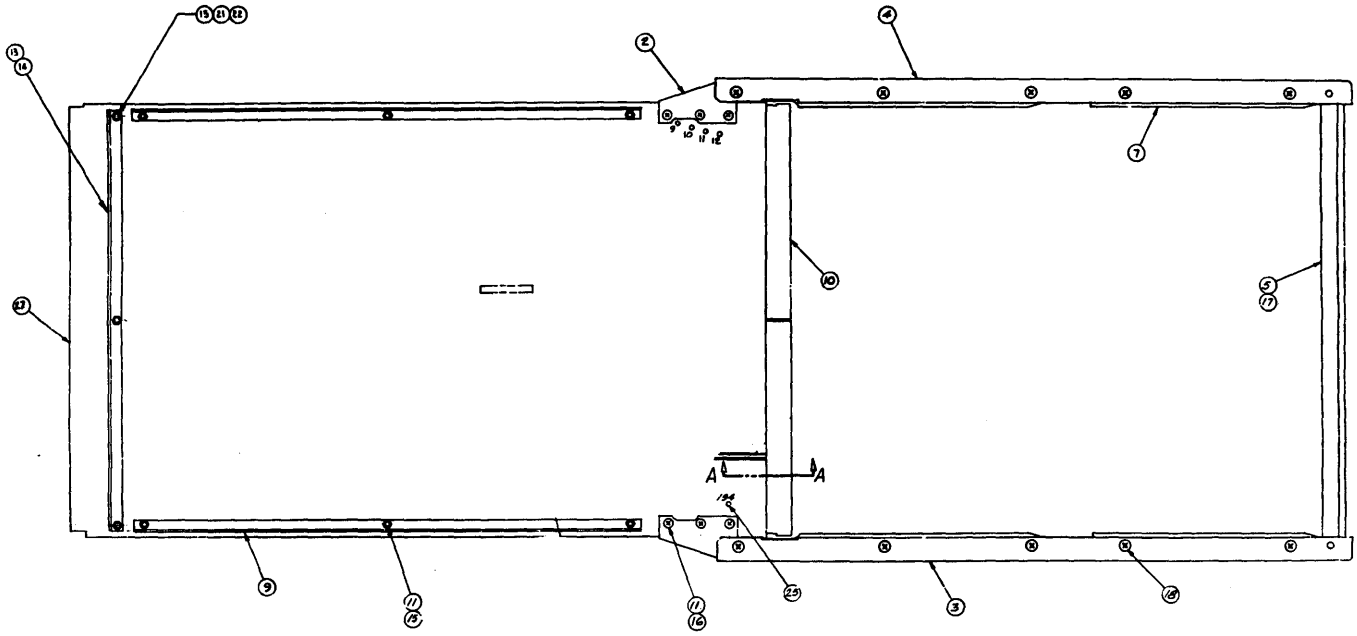

Assembly No. 1409773-03E. Digital Extender Board Assembly

ITEM NO.	PART NUMBER	DESCRIPTION	REF DESIG	QTY REQD PER DASH NUMBER -00	-02
1	1373371-03	CARD GUIDE		2	2
2	1409637-01	CONNECTOR		1	-
3					
4	1409912-01	SHIELD		1	1
5	1462964-01	BRACKET STIFFENER		2	-
6	1409900-02	PWB, EXTENDER BOARD			1
7	140-730	CONNECTOR, .100 SPACING, 50 POS (DUAL)			1
8	187-354	TERMINAL, PUSH-IN		80	80
9	471-061	SCREW, PAN HD., XREC, 4-40 X .312 LG		6	6
10	471-065	SCREW, PAN HD., XREC, 4-40 X .625 LG		6	6
11	492-002	NUT, HEX, LOCK, 4-40		6	-
12	501-169	WASHER, PLAIN, SMALL PATTERN, #4		12	12
13	502-002	WASHER, LOCK, HELICAL SPRING, #4		6	6
14	1462964-02	BRACKET, STIFFNER			2
15	496-004	NUT, HEX, CAPTIVE WASHER, 4-40			6

LM-1409899

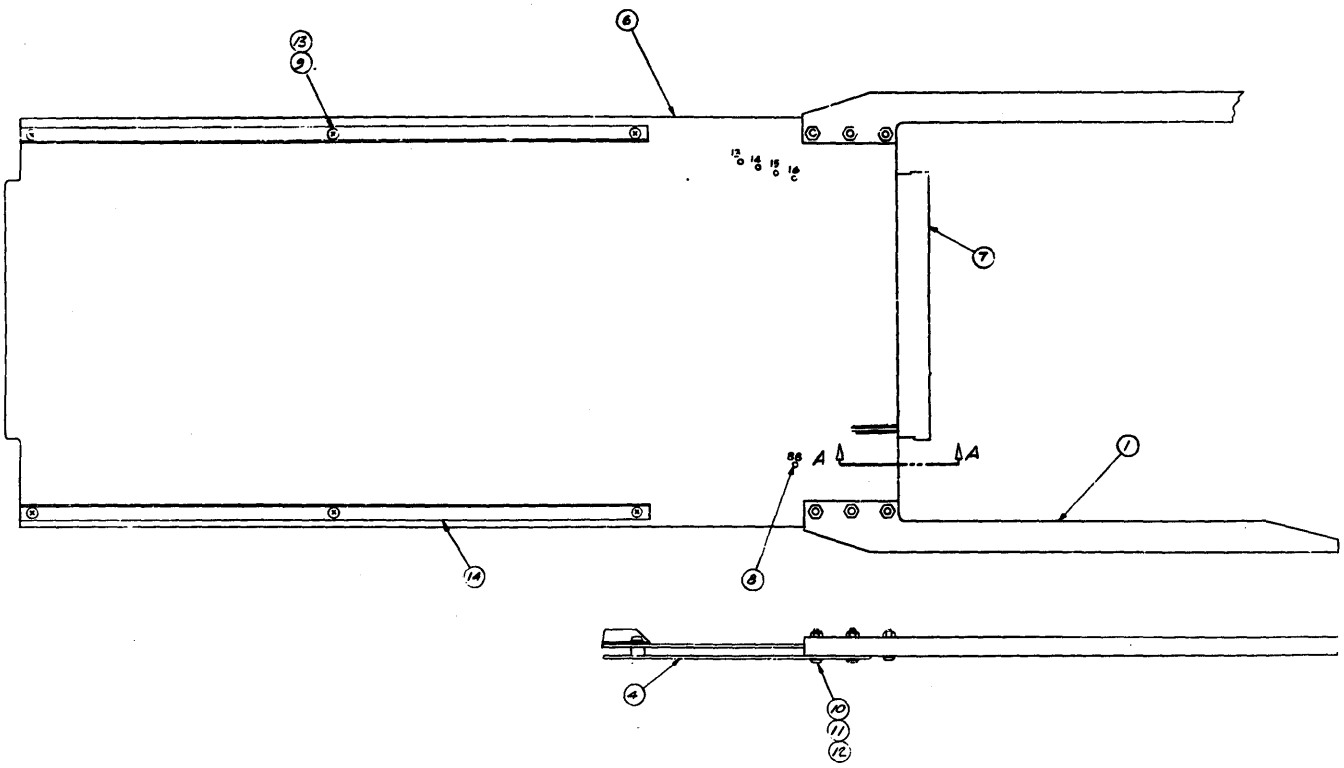

Assembly No. 1409899-02C. Analog Extender Board Assembly

ITEM NO.	PART NUMBER	DESCRIPTION	REF DESIG	QTY REQD PER DASH NUMBER 01
1	1420419-04	CABLE, SYSTEM INTERCONNECT		1
2	1420422-01	CABLE, KEYBOARD INTERCONNECT		1
3	1420480	WIRING DIAGRAM EXTERNAL REMOTE CONTROL CABLE		1
4				
5				
6	060-449	LAMP, INCANDESCENT, 28V, T-1-3/4 BULB		4
7	167-169	CONN. PART, SCREW, RETAINER, MALE, 4-40, 2 PER KIT		2
8	167-763	CONN, PART, CONTACT, PIN		12
9	167-845	CONN, PART, BODY PLUG, 9 POS		2
10				
11	177-072	CONN PART, SHIELD & CABLE CLAMP ASSY.		2
12	140-781	CONNECTOR, SIGNAL CIRCUIT, PLUG, 4 SOCKET 2	P3	1
13	084-081	CORD SET, POWER, 3 COND, 18 AWG		1

NOTES:

1. ITEMS 3, 6, 7, 8, 9, 11 AND 12 FOR CUSTOMERS USAGE.
2. REFER TO WIRING DIAGRAM 1420480

LM-1420479

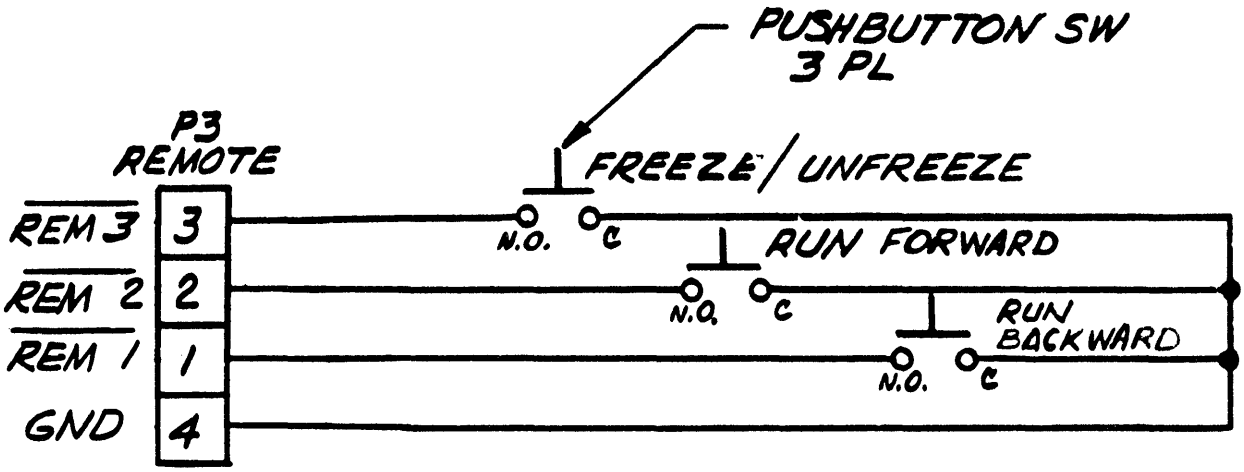

Wiring Diagram No. 1420480B. Remote Control Cable

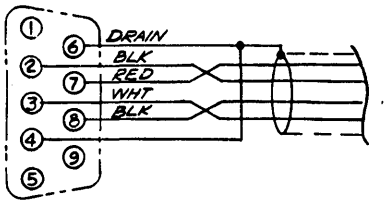

WIRING ROUTING DIAGRAM

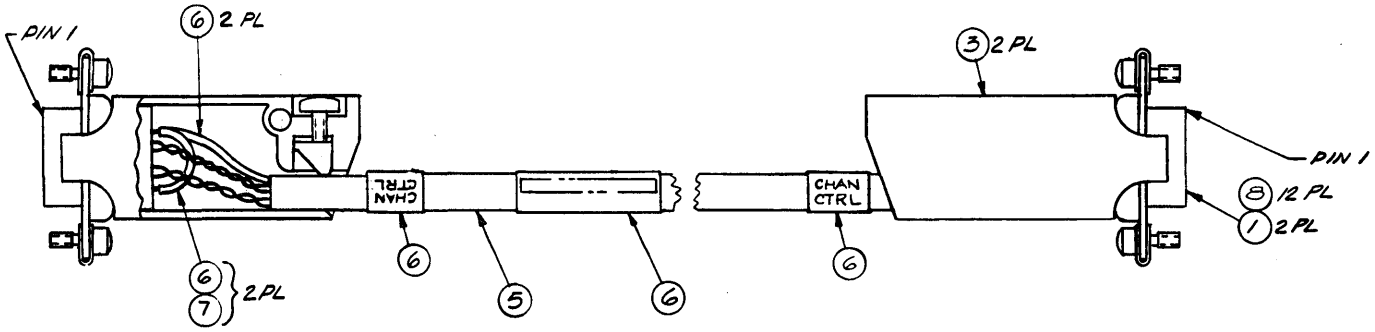

12	12				8	177-028	CONN. PART, CONTACT PIN
A/R	A/R	A/R			7	CD 569	WIRE, STRANDED, INSULATED 24 AWG
A/R	A/R	A/R			6	CD 726	SLEEVING, SHRINKABLE
A/R	A/R	A/R			5	636-171	CABLE, 4 COND + 1 DRAIN, 24 AWG
—	2	2			4	167-169	CONN PART, SCREW, RETAINER, MALE, 4-40
2	2	2			3	177-072	CONN PART, COVER
—	—	12			2	167-763	CONN PART, CONTACT, PIN
2	2	2			1	167-845	CONN PART, BODY, PLUG, 9 POS
04	03	01			ITEM NO.	PART NUMBER	DESCRIPTION

Assembly No. 1420419-04G. System Interconnect Cable

WIRE ROUTING LIST						
WIRE NO.	GAUGE/ COND	FROM		TO		REMARKS
		REF DESIG	TERM	REF DESIG	TERM	
1	24/2	P2	1	P9	1	+24V
2	24/3		2		2	GND
3	24/5		3		3	GND
4	24/DRAIN WIRE		4		4	USE ITEM 9 CHASSIS GND
5	24/6		5		5	+5V
6	24/9		6		6	+5V
7	24/90		7		7	IN LOW
8	24/92		8		8	OUT LOW
9	24/95		9		9	+24V
10	24/96		10		10	GND
11	24/92		11		11	GND
12	24/50		12		12	+5V
13	24/50		13		13	+5V
14	24/60		14		14	IN HIGH
15	24/90	P2	15	P9	15	OUT HIGH

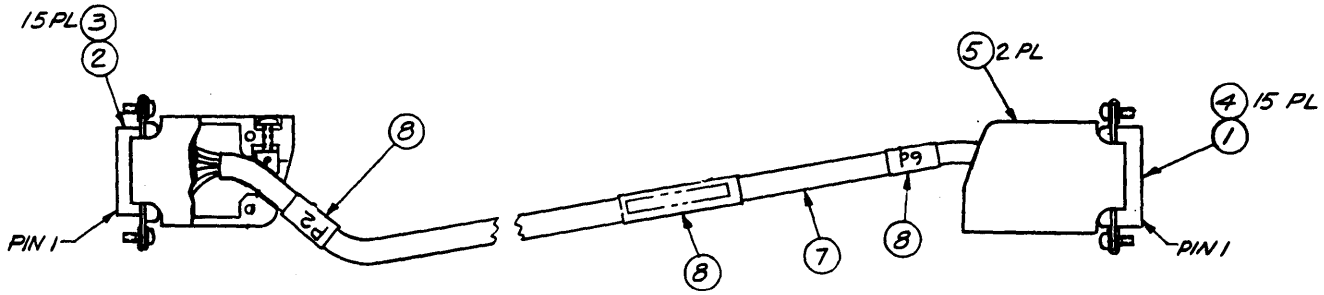

AR	9	600-036	SLEEVING, TEFLON, FLEXIBLE, NATURAL	
AR	8	CD 726	SLEEVING, SHRINKABLE	
AR	7	636-172	CABLE, 15 COND+1 DRAIN, 24 AWG	
—	6	167-169	CONN PART, SCREW, RETAINER, MALE, 4-40	
2	5	167-455	CONN PART, COVER	
15	4	177-028	CONN PART, CONTACT, PIN, 24-20 AWG	
15	3	177-027	CONN PART, CONTACT, SOCKET, 24-20 AWG	
1	2	167-640	CONN PART, BODY, RECPT, 15 POS	P2
1	1	167-639	CONN PART, BODY, PLUG, 15 POS	P9
01	ITEM NO.	PART NUMBER	DESCRIPTION	

Assembly No. 1420422-01F. Interconnect Keyboard Cable

ITEM NO.	PART NUMBER	DESCRIPTION	REF DESIG	QTY REQD PER DASH NUMBER -01	-02
1	1464601-01	PROM ASSEMBLY, CONTROL PROCESSOR	6P		—
2	1464602-01		6T		—
3	1464603-01		6W		—
4	1464604-01		7P		—
5	1464605-01		7T		—
6	1464606-01	PROM ASSEMBLY, CONTROL PROCESSOR	7W		—
7					
8	1464354-01	LABEL, SELECT VERS & OPTION			
9					
10	1465016	VERSION 5.0 CONTROL PANEL PROM INSTALLATION INSTRUCTIONS			—
11	1464626	Version 5.1 Control Panel PROM INSTALLATION INSTRUCTIONS			1
12					
13	1464548	LABEL, UPDATE INSTRUCTIONS			
14					
15	1465615-01	PROM ASSEMBLY, Control Processor	6P		1
16	1465616-01		6T		1
17	1465617-01		6W		1
18	1465618-01		7P		1
19	1465619-01		7T		1
20	1465620-01		7W		1

NOTES: 1 & 2

1. Items 1-6 (-01) version 5.0 only
2. " 15-20 (-02) " 5.1 "

LM-1464539

ITEM NO.	PART NUMBER	DESCRIPTION	REF DESIG	QTY REQD PER DASH NUMBER -01	-02
1	1409670-BP	LABEL, EXTRACTOR ARM		2	2
2	1409670-BR	LABEL, EXTRACTOR ARM		2	2
3	1420123-AD	LABEL, OPTION, DOOR		2	2
4	1420123-AE	LABEL, OPTION, DOOR		2	2
5	1420131-AP	KEY CAP SET, "ENT X7"		1	1
6	1420131-AR	KEY CAP SET, "ENT Y8"		1	1
7	1420131-AS	KEY CAP SET, "ENT Z9"		1	1
8	1420131-AT	KEY CAP SET, "TRIM X4"		1	1
9	1420131-AU	KEY CAP SET, "TRIM Y5"		1	1
10	1420131-AV	KEY CAP SET, "TRIM Z6"		1	1
11	1420374-BS	KEYBOARD PART INSERT, "CROP TOP/LEFT"		1	1
12	1420374-BT	KEYBOARD PART INSERT, "CROP BOT/RIGHT"		1	1
13	1464352-01	LABEL, SOFTWARE IDENT		1	1
14	1464353-01	LABEL, SOFTWARE & OPTION		1	1
15	1464354-03	LABEL, SELECT VERSION & OPTION		1	1
16	1464486-01	LABEL, CHAN A-D UPDATE		1	1
17	1464507-01	PWA, ROM ADAPTER		1	1
18	1464548	LABEL UPDATE INSTRUCTIONS		1	1
19	1464992-01	PROM ASSY, CONTROL PROCESSOR, 82S100	5H	1	1
20	1464993-01	PROM ASSY, CONTROL PROCESSOR, 18S030	6A,6B,6C,7A	4	4
21	1465020	VERSION 5.0 CONTROL PANEL HARDWARE FIELD UPGRADE INSTRUCTIONS	(REV A)	1	1
22	1465021-01	PROM ASSY, KEYBOARD CPU, 25L32	U5		1
23					
24	283-446	SPACER, 6-32 X 1.125 LG		4	4
25	619-364	WIRE, STRANDED, INSULATED, 24 AWG, 3 FT LG		1	1
26	615-095	WIRE, INSULATED, 30 AWG, 1 FT LG			1

LM-1464982

ITEM NO.	PART NUMBER	DESCRIPTION	REF DESIG	QTY REQD PER DASH NUMBER -01
1				
2				
3	1464509	SCHEMATIC		(-)
4				
5	064-653	CAPACITOR, 0.1uF, 50V, 20%	C1-8	8
6				
7	589-823	INTEGRATED CIRCUIT, 74LS138	5W	1
8				
9	143-981	JACK, P.C. TIP	J1-A,B,C	3
10				
11	181-065	TERMINAL STRIP, 32 POS 1	E3-66	2
12				
13	582-260	I.C. MTG HDW., SOC, 28 PIN 1	REF:6K,M,N,P,S,T,U,W, 7K,M,N,P,S,T,U,W	16
14				
15	602-044	SHORTING PLUG, RED	REF:J1	1
16				
17	155-005	SOCKET STRIP, 8 POS 1	REF:5W	2

NOTES:

1 SEE ASSY DWG FOR INSTALLATION:

LM-1464507

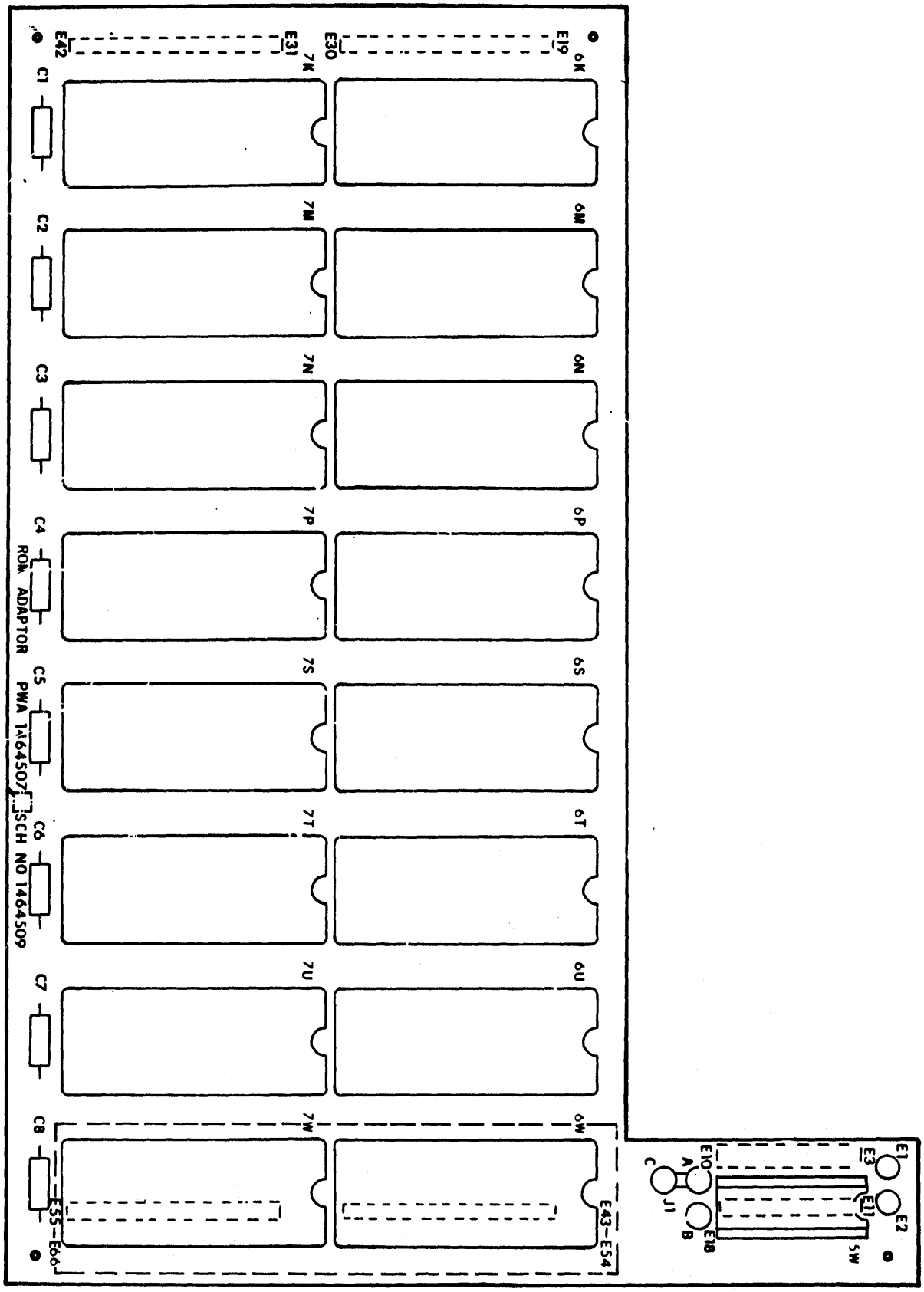

Assembly No. 1464507-01—. ROM Adaptor PWA

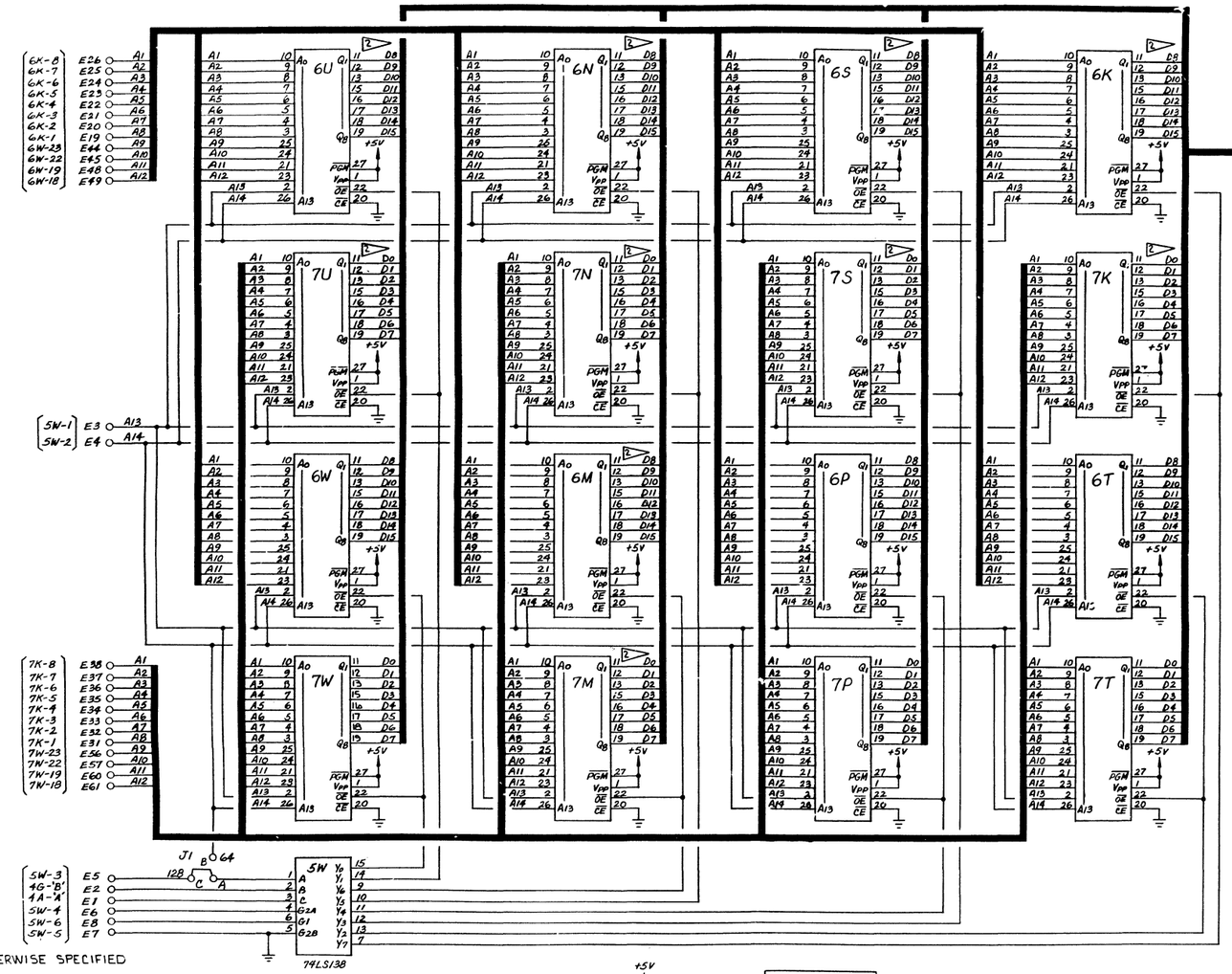

IC LIST			
REF DES	5W		
AMPEX P/N	589-823		
VENDOR P/N	74LS138		
VOLTAGE (PIN)	+5V (16)		
GND (PIN)	(8)		
REF DES	6P 3 4	6T 3 4	6W 3 4
AMPEX P/N	1464601-01	1464602-01	1464603-01
VENDOR P/N	27128	27128	27128
VOLTAGE (PIN)	+5V (28)	+5V (28)	+5V (28)
GND (PIN)	(14)	(14)	(14)
REF DES	7P 3 4	7T 3 4	7W 3 4
AMPEX P/N	1464604-01	1464605-01	1464606-01
VENDOR P/N	27128	27128	27128
VOLTAGE (PIN)	+5V (28)	+5V (28)	+5V (28)
GND (PIN)	(14)	(14)	(14)
REF DES	6P 3 5	6T 3 5	6W 3 5
AMPEX P/N	1464607-01	1464608-01	1464609-01
VENDOR P/N	27128	27128	27128
VOLTAGE (PIN)	+5V (28)	+5V (28)	+5V (28)
GND (PIN)	(14)	(14)	(14)
REF DES	7P 3 5	7T 3 5	7W 3 5
AMPEX P/N	1464610-01	1464611-01	1464612-01
VENDOR P/N	27128	27128	27128
VOLTAGE (PIN)	+5V (28)	+5V (28)	+5V (28)
GND (PIN)	(14)	(14)	(14)

NOTES: UNLESS OTHERWISE SPECIFIED

1. REF DESIGNATIONS IN BRACKETS DENOTE LOCATION ON CONTROL PROC PWA 1420474.

2 FOR FUTURE USE.

3 STATIC SENSITIVE: SPECIAL HANDLING REQ'D PER AMPEX STD HEI-1.

4 PROMS FOR SC/SCF ONLY.

5 PROMS FOR MC/MCP ONLY.

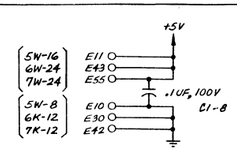

REF DES	
LAST USED	NOT USED
C8	
E66	
J1	

Schematic No. 1464509—.
ROM Adaptor PWA

ITEM NO.	PART NUMBER	DESCRIPTION	REF DESIG	QTY REQD PER DASH NUMBER -01	-02	-03
1	1464613	ADO VERSION FIVE SIGNAL SYSTEM UPGRADE INSTRUCTIONS (REV C)		1	1	1
2						
3	1464325-03	120V POWER SUPPLY CHASSIS ASSY DWG ONLY			1	1
4	1465043-01	120V CIRCUIT BREAKER PANEL ASSY		1	1	1
5	470-028	SCREW, CAP, SOC. HD., #8-32 X .437 LG		6	6	6
6	502-004	WASHER, LOCK SPRING, #8		6	6	6
7	502-400	WASHER, PLAIN, SMALL PATTERN, #8		6	6	6
8						
9	1464999-01	PROM ASSEMBLY, KEY PROC, 87S181 [1]	2E	2	2	2
10	1465001-01	PROM ASSEMBLY, KEY PROC, 27S191	2P	2	2	2
11	615-095	WIRE, KYNAR, 30 AWG, 15 FT LG		1	1	1
12						
13	1420295-02	PROM ASSEMBLY, ADRS GEN II	3G	2	2	2
14						
15	1465036-01	PROM ASSEMBLY, OUTPUT CONTROL, 87S181 [1]	5J		1	1
16	1465037-01	27S191	5K		1	1
17	1465038-01	87S181 [1]	5M		1	1
18	1465039-01	PROM ASSEMBLY, OUTPUT CONTROL, PAL16R4	5N		1	1
19	582-333	SOCKET, I.C., 20 PIN			1	1
20	582-280	SOCKET, I.C., 24 PIN		1	2	2
21	058-335	RESISTOR, VAR., 50K OHMS	R192	1	1	1
22	066-717	RESISTOR, C.F., 47K OHMS, 1/4W, ±5%	R24,191	2	2	2
23	066-665	RESISTOR, C.F., 1K OHMS, 1/4W, ±5%	R190	1	1	1
24	615-004	WIRE, SOLID, UNINS, 24 AWG, 4" LG		1	1	1
25	600-232	SLEEVING, TEFLON, .027 MAX I.D., 4" LG		1	1	1
26						
27						
28	1464328-02	PROM ASSEMBLY, OUTPUT CONTROL [1] [2]	5G	1	1	1
29	066-812	RESISTOR, C.F., 100 OHMS, 1/4W, ±5%	R22	1	1	1
30						
31	034-184	CAPACITOR, MICA., 68pF, 500V, ±5%	C76,77	2	2	2
32						
33	570-590	DELAY LINE, TZB92-10, 350 NS	DL2	1	1	1
34	062-948	RESISTOR, M.F., 2.55K OHMS, 1/4W, ±1%	R61	1	1	1
35						
36						
37						

LM-140450I

AMPEX	Ampex Corporation REDWOOD CITY, CALIFORNIA	CODE IDENT NO. 92739	LIST OF MATERIALS	LM-1464981 SHEET 2 OF 2	REV D

ITEM NO.	PART NUMBER	DESCRIPTION	REF DESIG	QTY REQD PER DASH NUMBER -02	-03
38					
39	066-720	RESISTOR, C.F., 3.3K OHMS, 1/4W, ±5%	R1	2	2
40					
41	172-394	TERMINAL LUG, SPADE, #6 STUD		1	1
42	187-396	CONNECTOR, QUICK DISCONNECT, FEMALE		4	4
43					
44	302-335	STRAP, CABLE		10	10
45	302-379	STRAP, CABLE		10	10
46	302-388	STRAP, CABLE		10	10
47					
48	616-015	CABLE, 3 COND, 10 AWG, 8 FT		1	1
49					
50	619-260	WIRE, WHITE, 10 AWG, 3 FT		1	1
51	619-261	WIRE, BLACK, 10 AWG, 1 FT		1	1
52	619-323	WIRE, GREEN, 10 AWG, 1 FT		1	1
53					
54					
55	1464866-02	HARNESS KIT, ADO, +5V DIGITAL POWER SUPPLY		1	1
56					
57					
58	1465035-01	PROM ASSEMBLY, OUTPUT CONTROL, 87S181 [1]	5G	1	1
59	1465080-01	PROM ASSEMBLY, H PROC, 28S42	6D	1	1
60	1465081-01	PROM ASSEMBLY, H PROC, 28S42	6E	1	1
61	1465082-01	PROM ASSEMBLY, H PROC, 28S42	7P	1	1
62	1465083-01	PROM ASSEMBLY, H PROC, 28S42	8D	1	1
63					
64	066-814	RESISTOR, C.F., 270 OHMS, 1/4W, ±5%	R48,49		2
65	076-004	RESISTOR, C.F., 180 OHMS, 1/4W, ±5%	R19,20		2
66	1809551-03	OPERATORS GUIDE TO ADO			1

NOTES:

[1] STATIC SENSITIVE DEVICE, SPECIAL HANDLING REQUIRED PER AMPEX STD HE1-1.

[2] PROM USED ONLY FOR VERSION 3 TO 4 UPDATE; REPLACED WHEN UPDATING TO VERSION 5.0.

LM-1464981

ITEM NO.	PART NUMBER	DESCRIPTION	REF DESIG	QTY REQD PER DASH NUMBER -01	-02	-03
1	1464613	ADO VERSION FIVE SIGNAL SYSTEM UPGRADE INSTRUCTIONS (REV C)		1	1	1
2	1464866-02	HARNESS KIT, +5V DIGITAL POWER SUPPLY		1	1	1
3	1464999-01	PROM ASSEMBLY, KEY PROC, 87S181 [1]	2E	2	2	2
4	1465001-01	PROM ASSEMBLY, KEY PROC, 27S191	2P	2	2	2
5	615-095	WIRE, KYNAR, 30 AWG, 4 FT LG		1	1	1
6						
7	1420295-02	PROM ASSEMBLY, ADRS GEN II	3G	2	2	2
8						
9	1465039-01	PROM ASSEMBLY, OUTPUT CONTROL, PAL 16R4	5H	1	1	1
10	1465047-01	87S181 [1]	5K	1	1	1
11	1465048-01	87S181 [1]	5J	1	1	1
12	1465049-01	PROM ASSEMBLY, OUTPUT CONTROL, 27S191	5K	1	1	1
13	582-333	SOCKET, I.C., 20 PIN		1	1	1
14	582-280	SOCKET, I.C., 24 PIN		1	2	2
15	034-184	CAPACITOR, MICA, 68pF, 500V, ±5%	C76,77	2	2	2
16						
17	570-590	DELAY LINE, TZB92-10, 350 NS	DL2	1	1	1
18	062-948	RESISTOR, M.F., 2.55K OHMS, 1/4W, ±1%	R61	1	1	1
19	066-720	RESISTOR, C.F., 3.3K OHMS, 1/4W, ±5%	R1	-	2	2
20						
21	1465045-01	PROM ASSEMBLY, OUTPUT CONTROL, 87S181 [1]	5G		1	1
22	1465006-01	PROM ASSEMBLY, H PROC, 28S42	7P	-	1	1
23	1465080-01	PROM ASSEMBLY, H PROC, 28S42	6D	-	1	1
24	1465081-01	PROM ASSEMBLY, H PROC, 28S42	6E	-	1	1
25	1465083-01	PROM ASSEMBLY, H PROC, 28S42	8D	-	1	1
26						
27	066-814	RESISTOR, C.F., 270 OHMS, 1/4W, ±5%	R14,15			2
28	076-004	RESISTOR, C.F., 180 OHMS, 1/4W, ±5%	R5,6			2
29	1809551-03	OPERATORS GUIDE TO ADO				1

NOTES:

[1] STATIC SENSITIVE DEVICE, SPECIAL HANDLING REQUIRED PER AMPEX STD HEI-1.

LM-1465057

ITEM NO.	PART NUMBER	DESCRIPTION	REF DESIG	QTY REQD PER DASH NUMBER -01	-02
1	1464867	INSTALLATION INSTRUCTIONS, ADD +5V HARNESS KIT (REV A)		1	1
2					
3	172-374	TERMINAL LUG, CRIMP, RING TONGUE, #5/16 STUD		2	-
4	172-396	TERMINAL LUG, CRIMP, RING TONGUE, #8 STUD		2	-
5					
6	617-637	WIRE, STRANDED, INSULATED, 6 AWG, BLACK		AR	-
7	617-854	WIRE, STRANDED, INSULATED, 6 AWG, RED		AR	-
8					
9	302-105	CLAMP, CABLE, .875		2	2
10					
11	[illegible]	SLEEVING, SHRINKABLE		AR	-
12					
13					
14	1464462-AA	WIRE ASSEMBLY, 6 AWG, RED			1
15	1464462-AB	WIRE ASSEMBLY, 6 AWG, BLK			1
16					
17	470-028	SCREW, CAP, SOC HD. #8-32 X .437 LG			6
18	502-004	WASHER, LOCK SPRING, #8			6
19	502-400	WASHER, PLAIN, SMALL PATTERN, #8			6

LM-1464866

APPENDIX A

INTEGRATED CIRCUITS

Table A1. Integrated Circuit Ampex Part Numbers

Ampex Part No.	Manufacturer's Part No.	Manufacturer	Page No.
000-003	ADC0808	National Semiconductor	A-1
000-005 See 590-983			A-65
000-007	AM25S10	Advanced Micro Devices	A-1
000-008	LM3911	National Semiconductor	A-2
000-009	MK4801	Mostek	A-2
000-011	2125	Intel	A-2
000-012	Z8470	Zilog	A-3
000-018 See 001-991			A-9
000-042	MPY16HJ	TRW	A-4
000-044	WD1510	Western Digital	A-4
000-045	CRT8002	Standard Microsystems	A-5
000-046	CRT9006	Standard Microsystems	A-6
000-048 See 001-965			A-8
000-049	FD1793-02	Western Digital	A-6
000-059	MC1690	Motorola	A-7
000-079	FD1793	Western Digital	A-7
000-085	LM733CH	National Semiconductor	A-7
000-088 See 589-752			A-55
000-127	SN74S381	TI	A-8
000-128 See 587-814			A-39
000-132 See 586-713			A-17
000-133 See 589-752			A-55
000-138 See 589-133			A-44
000-152 See 587-132			A-24
001-042 See 590-194			A-57
001-061 See 587-856			A-40
001-088 See 589-752			A-55
001-953	MC1488	Motorola	A-8
001-965	WD2143	Western Digital	A-8
001-991	Z8002	Zilog	A-9
580-953	CA3086	RCA	A-9
586-075	MC7400	Motorola	A-9
586-076	SN7410	Texas Instruments	A-10
586-077	SN7420N	Texas Instruments	A-10
586-108	SN7474	Texas Instruments	A-10
586-109 See 587-750			A-38
586-163	SN7454N	Texas Instruments	A-11
586-204	CA3018	RCA	A-11
586-268	FC741PC	Fairchild	A-11
586-276	CA3046	RCA	A-12
586-289	733HC	Intersil	A-12
586-321 See 586-449			A-13
586-327	SN74H11	Texas Instruments	A-12

APPENDIX A

INTEGRATED CIRCUITS
(Continued)

Table A1. Integrated Circuit Ampex Part Numbers

Ampex Part No.	Manufacturer's Part No.	Manufacturer	Page No.
586-335	LM306	National Semiconductor	A-13
586-449	SN72723J	Texas Instruments	A-13
586-450	SN74164	Texas Instruments	A-14
586-519	FC9322DC	Fairchild	A-14
586-533	SN74121N	Texas Instruments	A-15
586-553 See 586-533			A-15
586-623	741DM	Fairchild	A-15
586-688	SN74H04N	Texas Instruments	A-16
586-703	SN74151N	Texas Instruments	A-16
586-705	SN7486	Texas Instruments	A-16
586-713	FC7407PC	Fairchild	A-17
586-748 See 586-705			A-16
586-759	SN7408N	Texas Instruments	A-17
586-764 See 586-623			A-15
586-778	CA3054	RCA	A-17
586-784	SN7438N	Texas Instruments	A-18
586-797	SN74123	Texas Instruments	A-18
586-807	CD4024	National Semiconductor	A-19
586-830 See 586-075			A-9
586-831 See 586-688			A-16
586-901 See 586-077			A-10
586-905	SN72558P	Texas Instruments	A-20
586-910	SN7437N	Texas Instruments	A-20
586-918	SN7432	Texas Instruments	A-20
586-923	SN74163	Texas Instruments	A-21
586-925	SN74175N	Texas Instruments	A-21
586-948	SN74153N	Texas Instruments	A-22
586-954 See 586-076			A-10
586-959 See 586-703			A-16
586-978	SN74S112N	Texas Instruments	A-22
587-018	SN7410N	Texas Instruments	A-22
587-095 See 586-108			A-10
587-098	SN74S157N	Texas Instruments	A-23
587-131	MC10124L	Motorola	A-23
587-132	MC10125	Motorola	A-24
587-133	MC10116L	Motorola	A-24
587-139	MC10131L	Motorola	A-25
587-147	SN7414	Texas Instruments	A-25
587-150	SN74S86N	Texas Instruments	A-26
587-151 See 587-279			A-28
587-152	SN74S175N	Texas Instruments	A-26
587-203	MC10101	Motorola	A-27

APPENDIX A

INTEGRATED CIRCUITS
(Continued)

Table A1. Integrated Circuit Ampex Part Numbers

Ampex Part No.	Manufacturer's Part No.	Manufacturer	Page No.
587-266	SN74279	Texas Instruments	A-27
587-277 See 587-750			A-38
587-278	SN74S85N	Texas Instruments	A-28
587-279	SN74LS138N	Texas Instruments	A-28
587-280 See 587-410			A-31
587-282	SN74S260N	Texas Instruments	A-29
587-283 See 586-076			A-10
587-287	NE529K	Signetics	A-29
587-291	NE555V	Signetics	A-30
587-387 See 586-108			A-10
587-410	SN74LS139	Texas Instruments	A-31
587-431	SN74221	Texas Instruments	A-31
587-472	SN74S124	Texas Instruments	A-32
587-495 See 586-108			A-10
587-499	SN74S32N	Texas Instruments	A-33
587-510 See 586-075			A-9
587-523 See 586-918			A-20
587-533 See 586-688			A-16
587-534 See 586-759			A-17
587-535 See 586-797			A-18
587-537 See 587-431			A-31
587-549	MC10104	Motorola	A-33
587-550	MC10136	Motorola	A-34
587-551	MC10176	Motorola	A-35
587-552	12040	Motorola	A-35
587-566 See 586-910			A-20
587-626 See 587-750			A-38
587-630	MC10115P	Motorola	A-36
587-664	MC10174	Motorola	A-36
587-705	SN74LS670	Texas Instruments	A-37
587-723	CD4053AE	RCA	A-37
587-750	74LS02	Fairchild	A-38
587-751	SN74S08PC	Texas Instruments	A-38
587-752 See 586-163			A-11
587-755 See 587-278			A-28
587-757 See 587-152			A-26
587-770 See 587-152			A-26
587-772	SN74LS161	Texas Instruments	A-38
587-773 See 586-923			A-21
587-775 See 586-978			A-22
587-777 See 586-948			A-22
587-778	SN74LS30N	Texas Instruments	A-39

APPENDIX A

INTEGRATED CIRCUITS
(Continued)

Table A1. Integrated Circuit Ampex Part Numbers

Ampex Part No.	Manufacturer's Part No.	Manufacturer	Page No.
587-792 See 586-327			A-12
587-797	SN74LS253	Texas Instruments	A-36
587-814	SN74LS283N	Texas Instruments	A-39
587-856	SN75189	Texas Instruments	A-40
587-895	74LS164	Fairchild	A-41
587-896	DAC08CZ	Precision Monolithic	A-41
587-932	CA3080	RCA	A-41
587-973	74LS124	Farichild	A-42
589-007 See 586-923			A-22
589-016	SN74LS160N	Texas Instruments	A-42
589-017 See 589-133			A-44
589-022 See 589-490			A-50
589-077 See 586-923			A-21
589-088	SN74LS42N	Texas Instruments	A-43
589-091	SN74LS194	Texas Instruments	A-43
589-132 See 589-233			A-45
589-133	SN74S195N	Texas Instruments	A-44
589-224	AM74S381	Advanced Micro Devices	A-44
589-233	SN74LS192	Texas Instruments	A-45
589-263	NE529A	Signetics	A-45
589-301	F4069	Fairchild	A-46
589-331	SN74LS273N	Texas Instruments	A-46
589-334	SN74LS393N	Texas Instruments	A-46
589-376	TMS2716	Motorola	A-47
589-384 See 589-427			A-48
589-387 See 586-108			A-10
589-427	TL082CP	Texas Instruments	A-48
589-438	SM358N	National Semiconductor	A-48
589-448	SN74S182	Texas Instruments	A-48
589-449	SN74LS244	Texas Instruments	A-49
589-457	SN74245	Texas Instruments	A-49
589-482	93L422	Fairchild	A-50
589-483 See 589-752			A-55
589-490	SN74240	Texas Instruments	A-50
589-504	MC10109	Motorola	A-50
589-508	MC10135	Motorola	A-51
589-536	SN74S374J	Texas Instruments	A-51
589-537 See 589-536			A-51
589-605 See 587-814			A-39
589-619	Z8400	Zilog	A-52
589-640	8279	Intel	A-53
589-685	TDS523	TRW	A-54

APPENDIX A

INTEGRATED CIRCUITS
(Continued)

Table A1. Integrated Circuit Ampex Part Numbers

Ampex Part No.	Manufacturer's Part No.	Manufacturer	Page No.
589-688 See 586-688			A-16
589-752	SN74LS373	Texas Instruments	A-55
589-813 See 586-075			A-9
589-814 See 586-688			A-16
589-815 See 587-751			A-38
589-816 See 586-327			A-12
589-817 See 586-327			A-12
589-820 See 586-108			A-10
589-821 See 587-278			A-28
589-823 See 587-279			A-28
589-824 See 586-948			A-22
589-825 See 587-098			A-23
589-827 See 586-450			A-14
589-830 See 587-152			A-26
589-831 See 586-925			A-21
589-837 See 586-075			A-9
589-838 See 586-688			A-16
589-839 See 587-751			A-38
589-840 See 586-076			A-10
589-843 See 586-077			A-10
589-844 See 587-778			A-39
589-845 See 586-910			A-20
589-846 See 586-108			A-10
589-847 See 587-150			A-26
589-848 See 587-279			A-28
589-850 See 586-923			A-21
589-853 See 586-784			A-18
589-896 See 586-108			A-10
589-897 See 589-752			A-55
589-915 See 580-953			A-9
589-920	MC10231	Motorola	A-55
589-931 See 587-778			A-38
589-933 See 587-772			A-38
589-934 See 587-431			A-31
589-935 See 589-334			A-46
589-937 See 587-152			A-26
589-938 See 586-925			A-21
590-049	MCM10152	Motorola	A-56
590-057	CRT5-38	Standard Microsystems	A-56
590-090 See 589-449			A-49
590-108 See 001-953			A-8
590-183	MK4116N	Mostek	A-56

APPENDIX A

INTEGRATED CIRCUITS
(Continued)

Table A1. Integrated Circuit Ampex Part Numbers

Ampex Part No.	Manufacturer's Part No.	Manufacturer	Page No.
590-193	9637	Fairchild	A-57
590-194	DS3692	Fairchild	A-57
590-227	AM25S09	Advanced Micro Devices	A-57
590-251	AMZ8166	Zilog	A-58
590-252	MC10216	Motorola	A-58
590-321 See 589-490			A-50
590-322	MC75463	Motorola	A-59
590-326 See 587-139			A-25
590-327 See 587-287			A-29
590-328 See 586-918			A-20
590-329 See 586-797			A-18
590-330 See 587-630			A-36
590-331 See 587-750			A-38
590-332 See 587-750			A-38
590-333 See 586-923			A-21
590-335 See 589-331			A-46
590-401	AM2966	Advance Mirco Devices	A-60
590-443 See 587-750			A-38
590-445 See 586-978			A-22
590-450 See 587-723			A-37
590-452 See 589-091			A-43
590-461 See 586-978			A-22
590-503 See 589-438			A-48
590-531 See 589-490			A-50
590-533 See 586-268			A-11
590-535 See 586-450			A-14
590-540 See 587-797			A-36
590-543 See 587-133			A-24
590-544 See 587-147			A-25
590-547 See 587-472			A-32
590-552 See 587-266			A-27
590-564 See 587-131			A-23
590-584 See 589-449			A-49
590-586 See 589-536			A-51
590-602 See 589-427			A-48
590-606 See 587-814			A-39
590-610 See 586-533			A-15
590-612 See 586-905			A-20
590-615 See 587-410			A-31
590-616 See 587-431			A-31
590-620 See 586-705			A-16
590-622 See 587-705			A-37

APPENDIX A

INTEGRATED CIRCUITS
(Continued)

Table A1. Integrated Circuit Ampex Part Numbers

Ampex Part No.	Manufacturer's Part No.	Manufacturer	Page No.
590-668 See 589-752			A-55
590-721 See 586-276			A-12
590-725 See 587-291			A-30
590-734 See 587-896			A-41
590-735 See 589-427			A-48
590-739 See 589-088			A-43
590-811	TOC1016J	TRW	A-60
590-839 See 587-751			A-38
590-842 See 587-098			A-23
590-843 See 587-278			A-28
590-845 See 587-499			A-33
590-847 See 589-457			A-49
590-848 See 589-752			A-55
590-853 See 587-410			A-31
590-854 See 589-490			A-50
590-855 See 589-536			A-51
590-859	SN74LS182	Texas Instruments	A-60
590-861	AM25LS14	Advanced Micro Devices	A-61
590-862	AM25LS15	Advanced Micro Devices	A-61
590-863	AM25LS2517	Advanced Micro Devices	A-61
590-864	AM25LS22	Advanced Micro Devices	A-62
590-865	AM25LS23	Advanced Micro Devices	A-62
590-866	AMZ8002	Advanced Micro Devices	A-62
590-867	AM9551	Advanced Micro Devices	A-63
590-868 See 589-449			A-49
590-870 See 589-482			A-50
590-931	AM25LS2521	Advanced Micro Devices	A-63
590-932	CDP1854	RCA	A-64
590-960	MC68B50	Motorola	A-64
590-971 See 590-811			A-60
590-982	MC10186	Motorola	A-65
590-983	TMM2016	Toshiba	A-65
590-987	MPY8HJ	TRW	A-66
590-989	MK4164	Mostek	A-66
590-991	3094	RCA	A-67

NATIONAL SEMICONDUCTOR ADC0808	AMPEX 000-003	μP COMPATIBLE A/D CONVERTER w/ 8-CHANNEL MULTIPLEXER

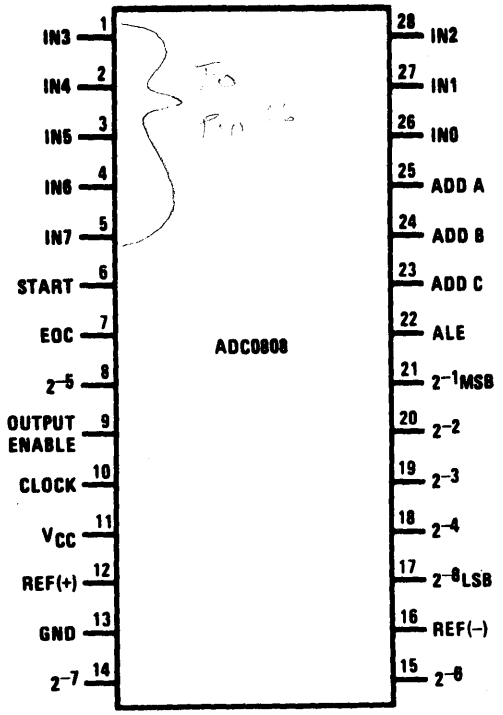

ADVANCED MICRO DEVICES AM25S10	AMPEX 000-007	FOUR-BIT SHIFTER w/THREE-STATE OUTPUT

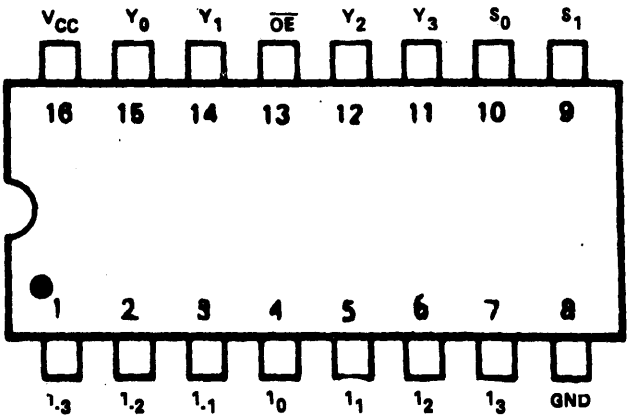

NATIONAL SEMICONDUCTOR LM3911	AMPEX 000-008	TEMPERATURE CONTROLLER

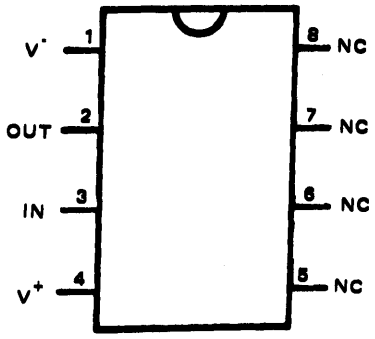

MOSTEK MK4801	AMPEX 000-009	1K x 8-BIT STATIC RAM

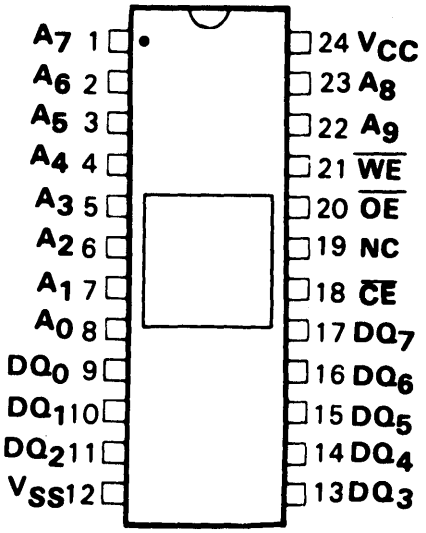

INTEL 2125	AMPEX 000-011	HIGH SPEED STATIC 1024 BIT RAM

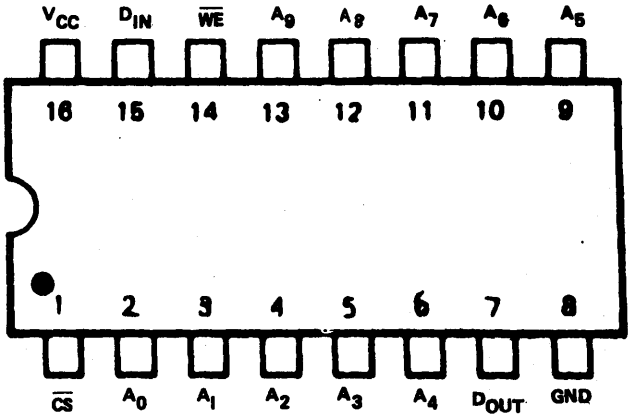

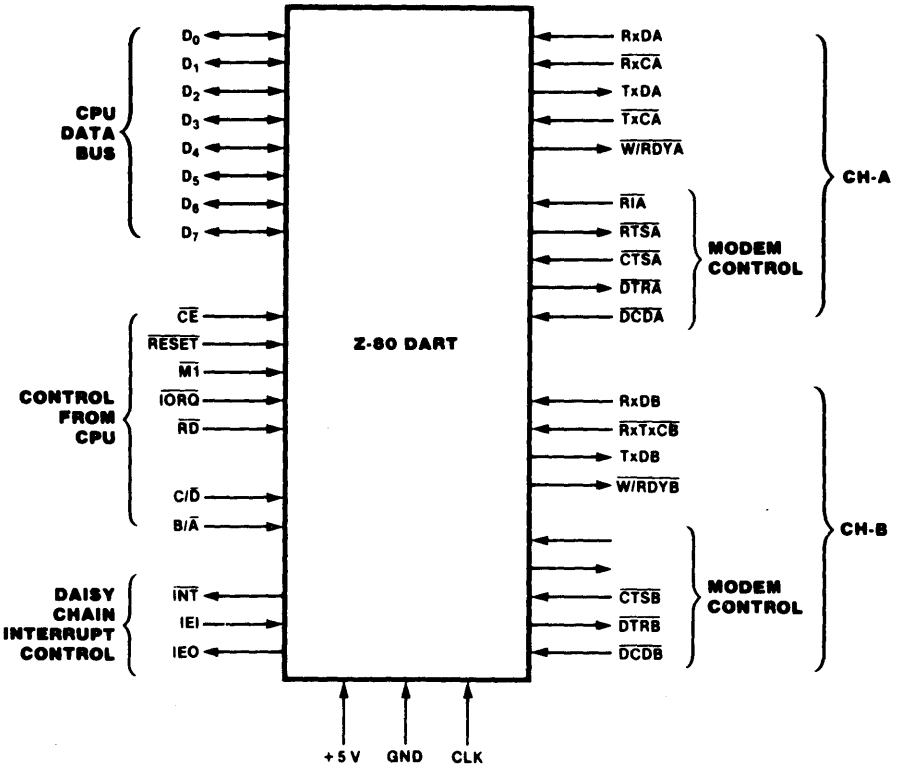
CPU DATA BUS
D0
D1
D2
D3
D4
D5
D6
D7
CONTROL FROM CPU
CE
RESET
M1
IORQ
RD
C/D
B/A
DAISY CHAIN INTERRUPT CONTROL
INT
IEI
IEO
Z-80 DART
RxDA
RxCA
TxDA
TxCA
W/RDYA
RIA
RTSA
CTSA
DTRA
DCDA
MODEM CONTROL
CH-A
RxDB
RxTxCB
TxDB
W/RDYB
CTSB
DTRB
DCDB
MODEM CONTROL
CH-B
+5 V
GND
CLK

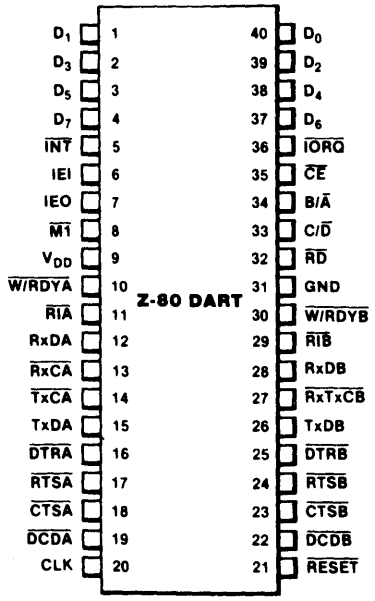
Z-80 DART
D1 1
D3 2
D5 3
D7 4
INT 5
IEI 6
IEO 7
M1 8
VDD 9
W/RDYA 10
RIA 11
RxDA 12
RxCA 13
TxCA 14
TxDA 15
DTRA 16
RTSA 17
CTSA 18
DCDA 19
CLK 20
40 D0
39 D2
38 D4
37 D6
36 IORQ
35 CE
34 B/A
33 C/D
32 RD
31 GND
30 W/RDYB
29 RIB
28 RxDB
27 RxTxCB
26 TxDB
25 DTRB
24 RTSB
23 CTSB
22 DCDB
21 RESET

TRW MPY16HJ	AMPEX 000-042	LSI MULTIPLIER

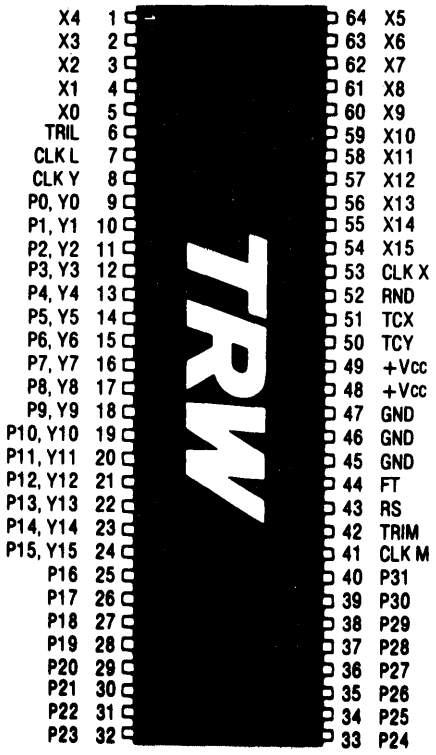

WESTERN DIGITAL WD1510	AMPEX 000-044	BUFFER REGISTER

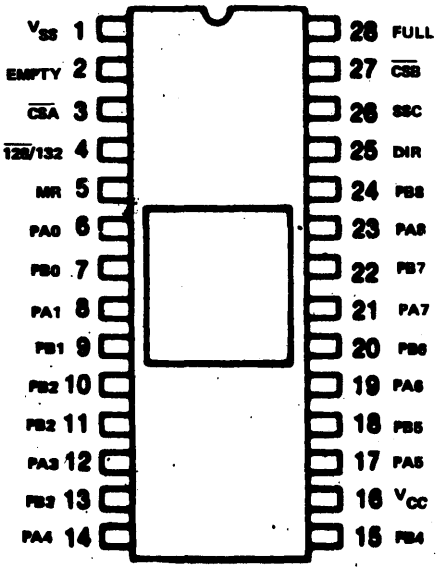

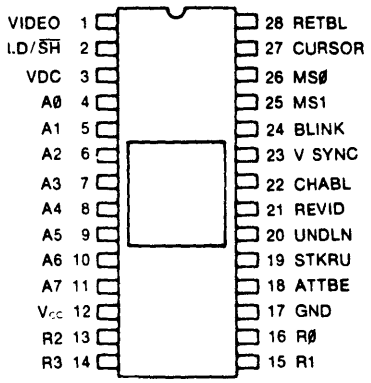
VIDEO 1
I.D/$\overline{SH}$ 2
VDC 3
AØ 4
A1 5
A2 6
A3 7
A4 8
A5 9
A6 10
A7 11
V_{CC} 12
R2 13
R3 14
28 RETBL
27 CURSOR
26 MSØ
25 MS1
24 BLINK
23 V SYNC
22 CHABL
21 REVID
20 UNDLN
19 STKRU
18 ATTBE
17 GND
16 RØ
15 R1

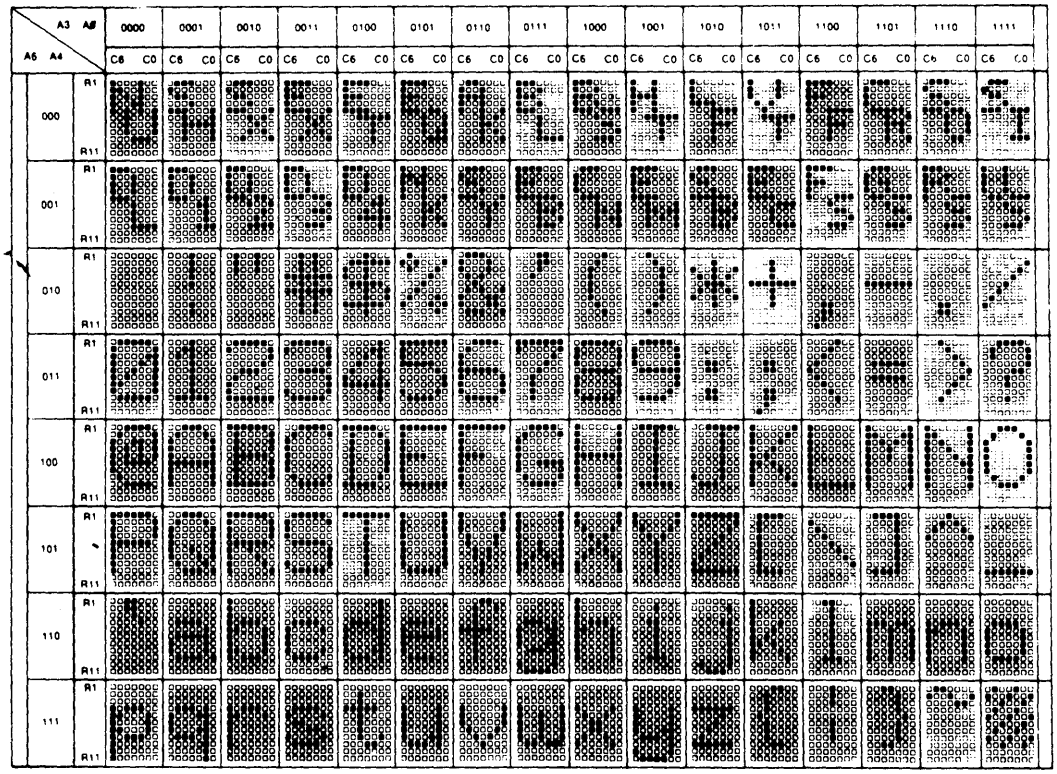
A3 AØ
A6 A4
0000
0001
0010
0011
0100
0101
0110
0111
1000
1001
1010
1011
1100
1101
1110
1111
C6 C0
000
001
010
011
100
101
110
111
R1
R11

STANDARD MICROSYSTEMS CORP.	AMPEX	SINGLE ROW BUFFER
CRT 9006	000-046	

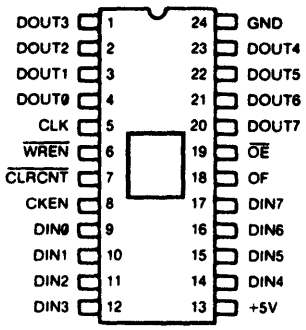

WESTERN DIGITAL	AMPEX	FLOPPY DISK CONTROLLER
FD1793-02	000-049	

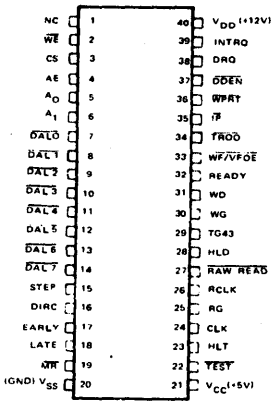

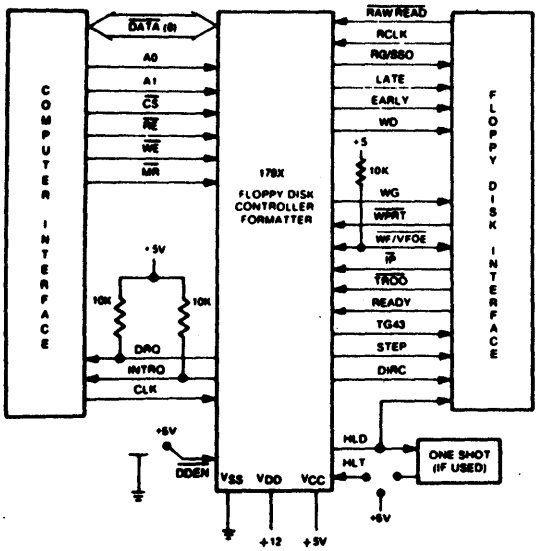

MOTOROLA MC1690	AMPEX 000-059	UHF PRESCALER TYPE D FLIP-FLOP

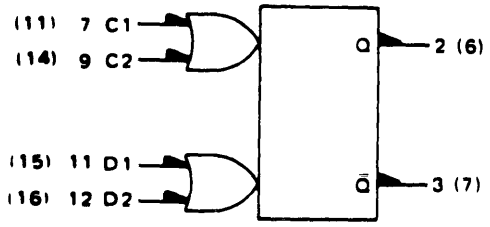

TRUTH TABLE

C	D	Q_{n+1}
L	ϕ	Q_n
H	ϕ	Q_n
⁄	L	L
⁄	H	H

C = C1 + C2 ϕ Don't Care
D = D1 + D2

WESTERN DIGITAL FD1793	AMPEX 000-079	FLOPPY DISK FORMATTER/ CONTROLLER

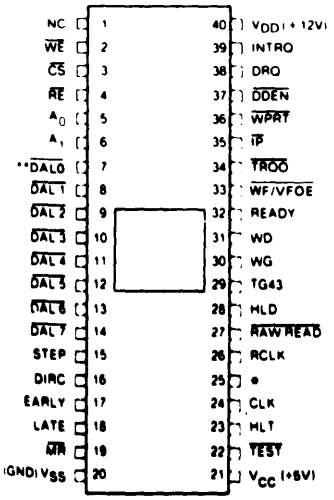

NATIONAL LM733CH	AMPEX 000-085	DIFFERENTIAL VIDEO AMP

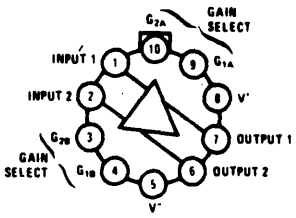

TEXAS INSTRUMENT SN74S381 — AMPEX 000-127 — ARITHMETIC LOGIC UNIT/ FUNCTION GENERATOR

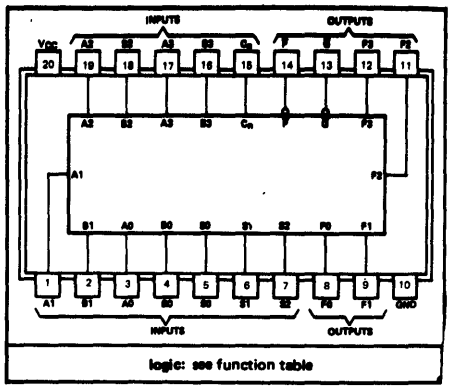

FUNCTION TABLE

SELECTION			ARITHMETIC/LOGIC
S2	S1	S0	OPERATION
L	L	L	CLEAR
L	L	H	B MINUS A
L	H	L	A MINUS B
L	H	H	A PLUS B
H	L	L	A ⊕ B
H	L	H	A + B
H	H	L	AB
H	H	H	PRESET

H = high level, L = low level

DESIGNATION	PIN NOS.	FUNCTION
A3, A2, A1, A0	17, 19, 1, 3	WORD A INPUTS
B3, B2, B1, B0	16, 18, 2, 4	WORD B INPUTS
S2, S1, S0	7, 6, 5	FUNCTION-SELECT INPUTS
C_n	15	CARRY INPUT FOR ADDITION, INVERTED CARRY INPUT FOR SUBTRACTION
F3, F2, F1, F0	12, 11, 9, 8	FUNCTION OUTPUTS
$\overline{P}$	14	INVERTED CARRY PROPAGATE OUTPUT
$\overline{G}$	13	INVERTED CARRY GENERATE OUTPUT
V_{CC}	20	SUPPLY VOLTAGE
GND	10	GROUND

MOTOROLA MC1488 — AMPEX 001-953 — QUAD LIND DRIVER

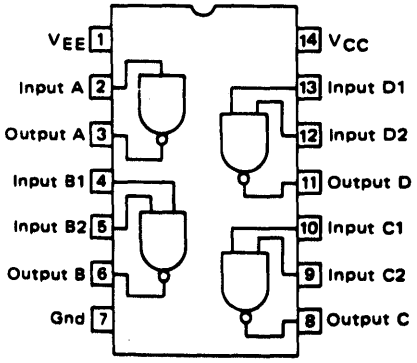

WESTERN DIGITAL WD2143 — AMPEX 001-965 — FOUR PHASE CLOCK GENERATOR

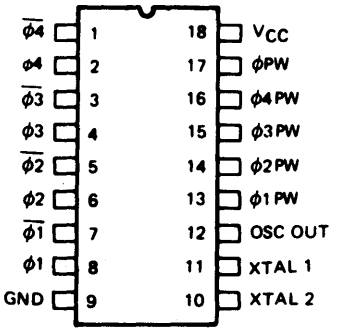

ZILOG AmZ8002	AMPEX 001-991	16-BIT MICROPROCESSPOR

LOGIC SYMBOL

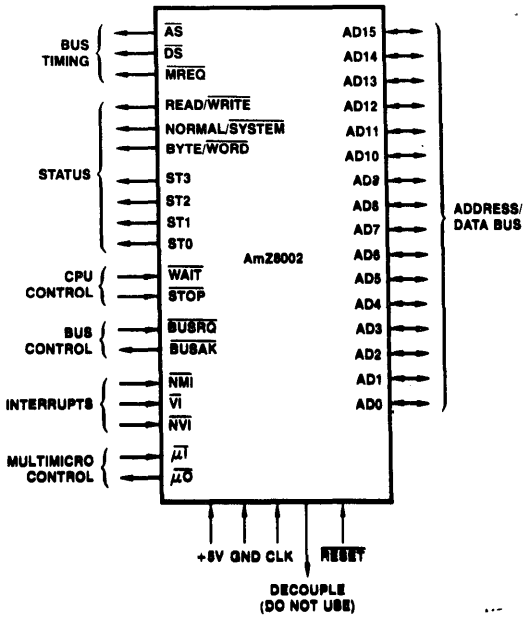

CONNECTION DIAGRAM

Top View

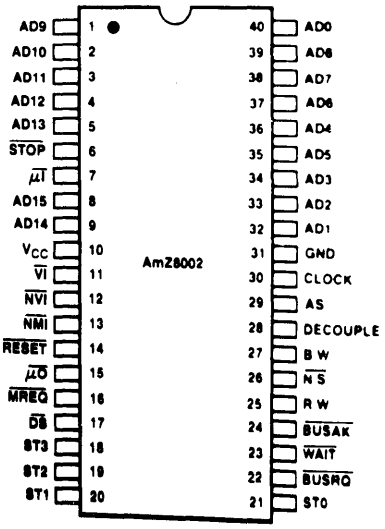

RCA CA3086	AMPEX 580-953	GENERAL-PURPOSE N-P-N TRANSISTOR ARRAY

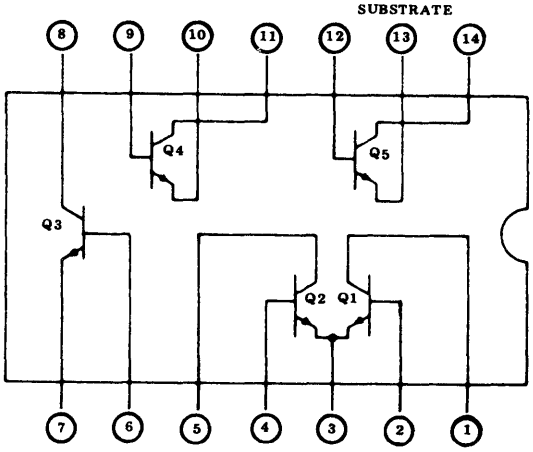

MOTOROLA MC 7400	AMPEX 586-075	QUAD 2-INPUT NAND GATE

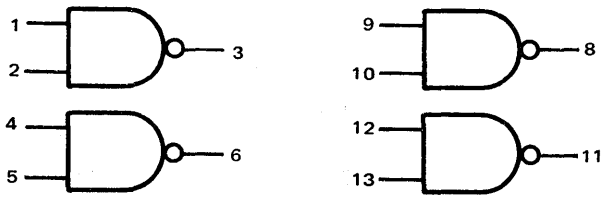

PIN 7 = GND
PIN 14 = V_{CC} (+5V)
3 = $\overline{1.2}$

TEXAS INSTRUMENTS SN 7410 N	AMPEX 586-076	3-INPUT NAND GATE

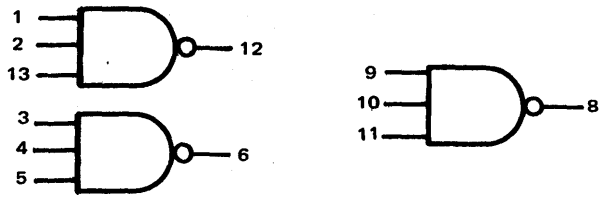

PIN 7 = GND
PIN 14 = V_{cc}
12 = $\overline{1.2.13}$

TEXAS INSTRUMENTS SN 7420 N	AMPEX 586-077	4-INPUT NAND GATE

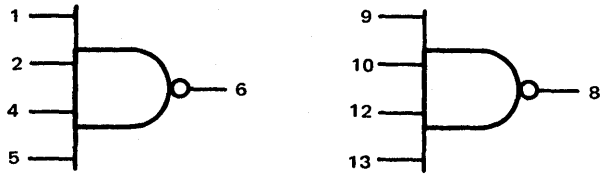

PIN 7 = GND
PIN 14 = V_{cc}
6 = $\overline{1.2.4.5}$

TEXAS INSTRUMENTS SN 7474	AMPEX 586-108	DUAL D-TYPE EDGE-TRIGGERED FLIP-FLOP

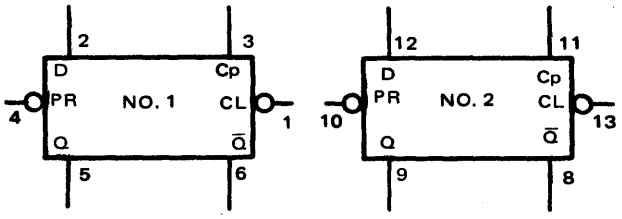

PIN 7 = GND
PIN 14 = V_{cc}

PR = PRESET
CL = CLEAR
Cp = CLOCK

$t_n + 1$ IS TIME AFTER POSITIVE TRANSITION OF CLOCK

t_n D	$t_n + 1$ Q
L	L
H	H

PR	CL	Q
L	H	H
H	L	L
L	L	ND

TEXAS INSTRUMENTS SN 7454 N	AMPEX 586-163	4-WIDE AND-OR-INVERT GATES

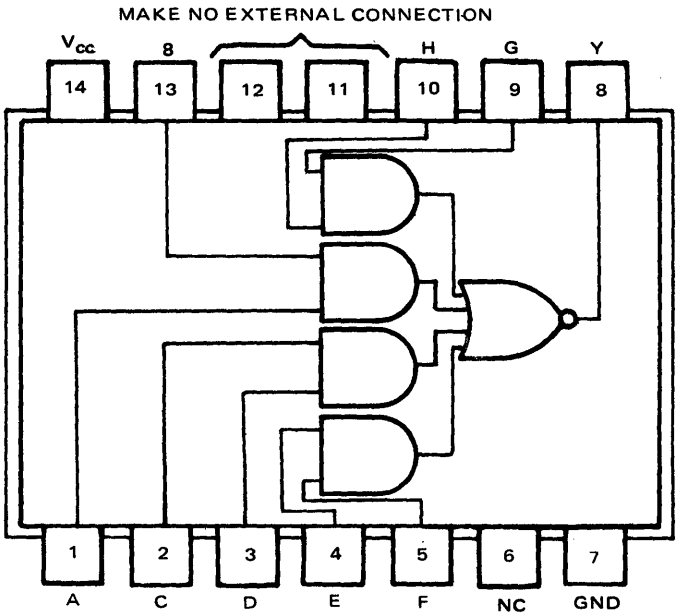

$Y = \overline{AB+CD+EF+GH}$

RCA CA 3018	AMPEX 586-204	ARRAY, TRANSISTOR

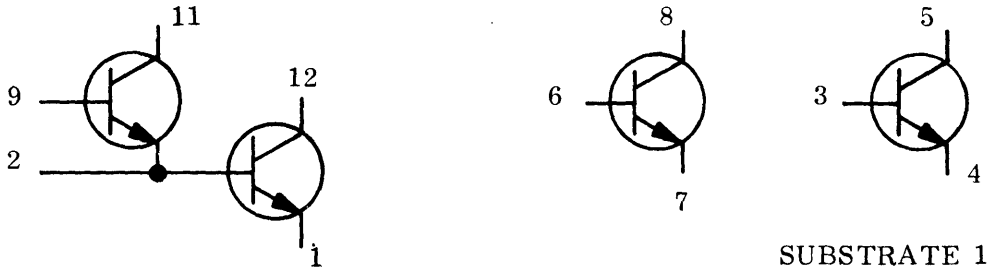

FAIRCHILD FC 741 PC	AMPEX 586-268	OPERATIONAL AMPLIFIER

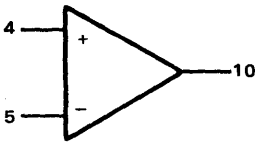

1,2,7,8
12,13,14 NO CONNECTION

PIN 6 = −SUPPLY
PIN 11 = +SUPPLY

RCA CA 3046	AMPEX 586-276	GENERAL PURPOSE TRANSISTOR ARRAY

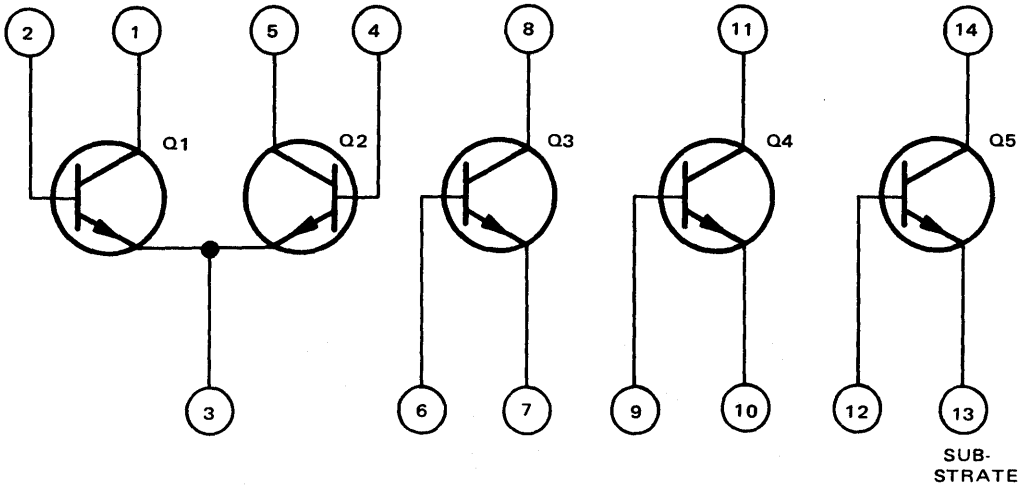

INTERSIL 733 HC	AMPEX 586-289	DIFFERENTIAL AMPLIFIER

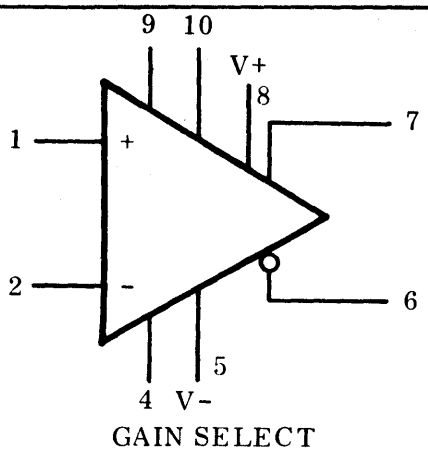

TEXAS INSTRUMENTS SN 74H11	AMPEX 586-327	TRIPLE 3-INPUT AND GATE

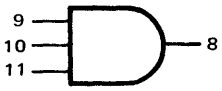

PIN 7 = GND
PIN 14 = +5V(V_{cc})

NATIONAL SEMICONDUCTOR LM 306	AMPEX 586-335	VOLTAGE COMPARATOR/ BUFFER

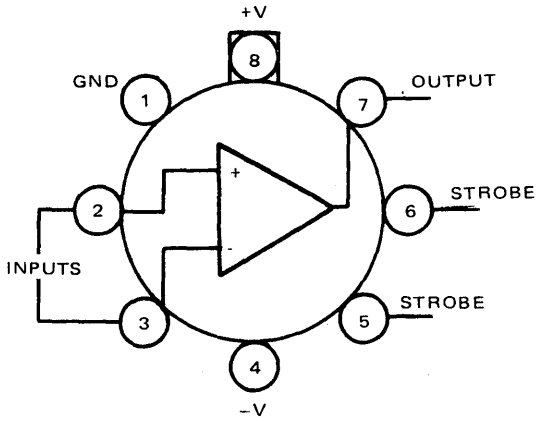

PIN 1 = GND
PIN 4 = −15V (−V), MAX
PIN 8 = +15V (+V), MAX

NOTE: PIN 4 CONNECTED TO CASE

TEXAS INST SN72723J	AMPEX 586-449	PRECISION VOLTAGE REGULATORS

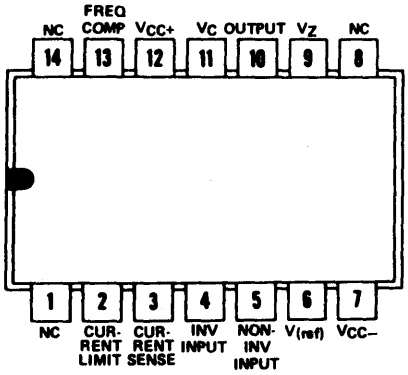

TEXAS INSTRUMENTS SN 74164	AMPEX 586-450	8-BIT PARALLEL OUT SERIAL SHIFT REGISTER

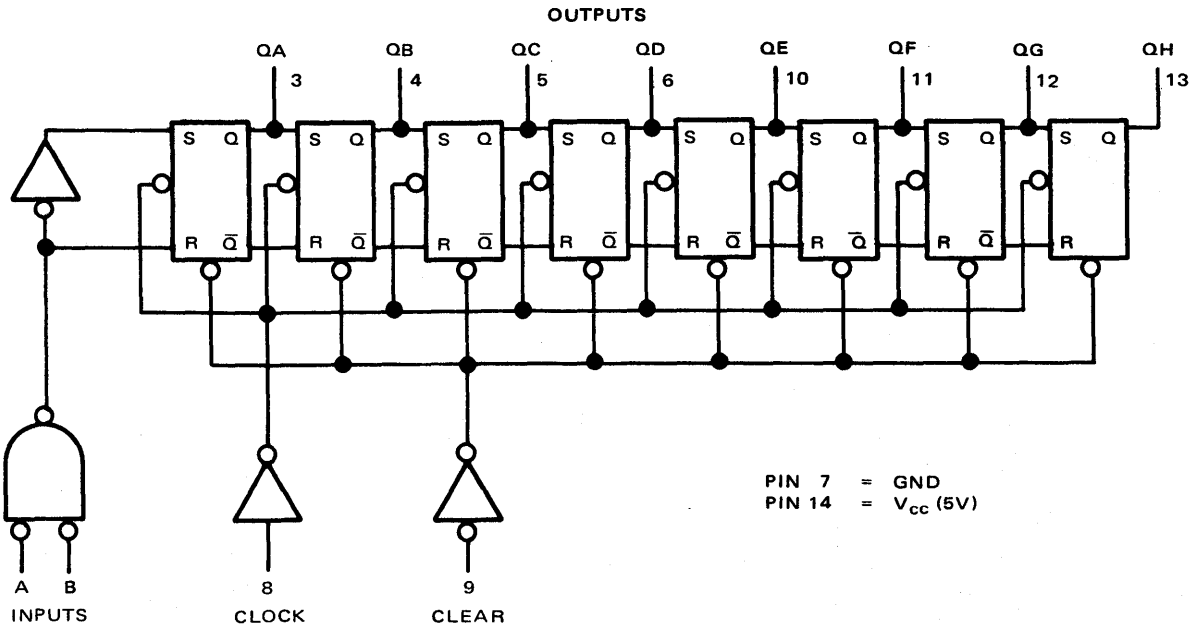

FAIRCHILD FC 9322 DC	AMPEX 586-519	QUAD 2-INPUT MULTIPLEXER

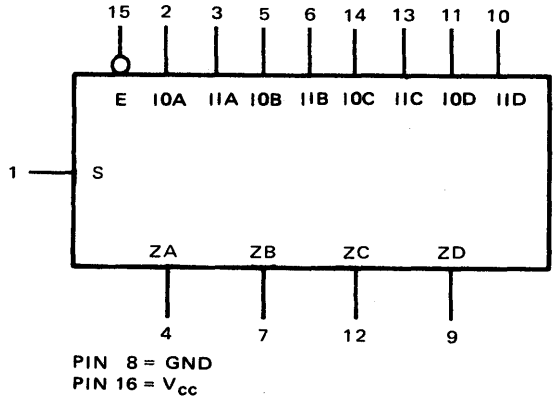

TEXAS INSTRUMENTS SN 74121 N	AMPEX 586-533	MONOSTABLE MULTIVIBRATOR

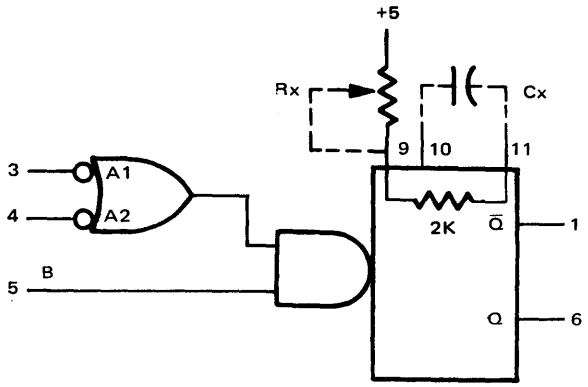

Cx = 1000 μF MAX
Rx = 40K MAX

PIN 7 = GND
PIN 14 = +5V (V_{cc})

A1 AND A2 TRIGGER THE ONE-SHOT WHEN EITHER OR BOTH GO TO "O" WITH B AT "1."

B IS A POSITIVE SCHMITT – TRIGGER INPUT AND WILL TRIGGER THE ONE-SHOT WHEN IT GOES TO "1" WITH EITHER A1 OR A2 AT "0."

EXTERNAL TIMING CAPACITOR MAY BE CONNECTED FROM PINS 10 TO 11. WITH NO EXTERNAL TIMING COMPONENTS OUTPUT PULSE WIDTH IS APPROXIMATELY 30 NS.

TO USE INTERNAL TIMING RESISTOR, CONNECT PIN 9 TO 14 (V_{cc}). TO USE EXTERNAL VARIABLE TIMING RESISTOR, CONNECT BETWEEN PINS 9 AND 14. FOR ACCURATE NON-VARIABLE PULSE WIDTHS, CONNECT EXTERNAL TIMING RESISTOR FROM PIN 11 TO 14 WITH PIN 9 OPEN – CIRCUITED.

FAIRCHILD 741 TC 747 DM	AMPEX 586-764 586-623	OFFSET NULL

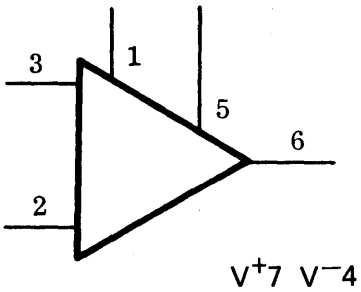

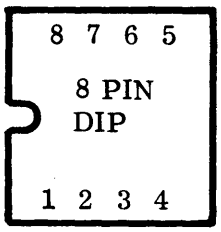

TEXAS INSTRUMENTS SN 74H04N	AMPEX 586-688	HEX INVERTER

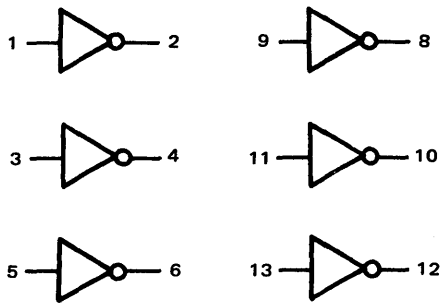

PIN 7 = GND
PIN 14 = +5V (V_{cc})

TEXAS INSTR SN 74151N SN 74LS151N	AMPEX 586-703 587-950	DATA SELECTOR (MULTIPLEXER)

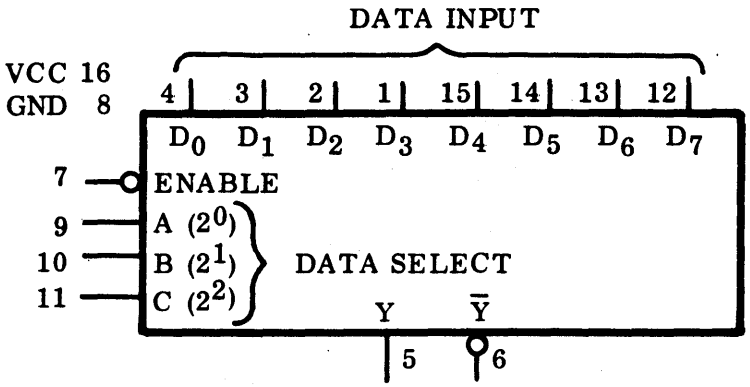

1. ENABLE (PIN 7) HIGH, Y LOW, Y HIGH.
2. ENABLE LOW, OUTPUT Y FOLLOWS DATA SELECTED (INPUT) BY BINARY NUMBER AT DATA SELECT. PIN 6 (Y) WILL BE COMPLEMENT OF SELECTED DATA INPUT.

TEXAS INSTRUMENTS SN 7486	AMPEX 586-705	QUAD EXCLUSIVE OR GATE

$A \oplus B = Y$

A	B	Y
1	2	3
4	5	6
9	10	8
12	13	11

PIN 7 = GND
PIN 14 = V_{cc}

FAIRCHILD FC 7407 PC	AMPEX 586-713	HEX BUFFER/DRIVER WITH OPEN-COLLECTOR HIGH-VOLTAGE OUTPUT

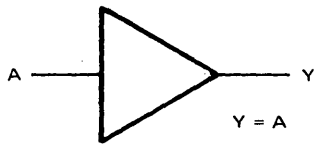

HEX BUFFER

PIN 7 = GND
PIN 14 = V_{cc}

A	Y
1	2
3	4
5	6
9	8
11	10
13	12

TEXAS INSTRUMENTS SN 7408 N	AMPEX 586-759	QUAD 2-INPUT AND GATE

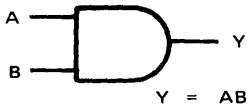

A	1	4	9	12
B	2	5	10	13
Y	3	6	8	11

PIN 7 = GND
PIN 14 = V_{cc}

RCA CA 3054	AMPEX 586-778	TRANSISTOR ARRAY

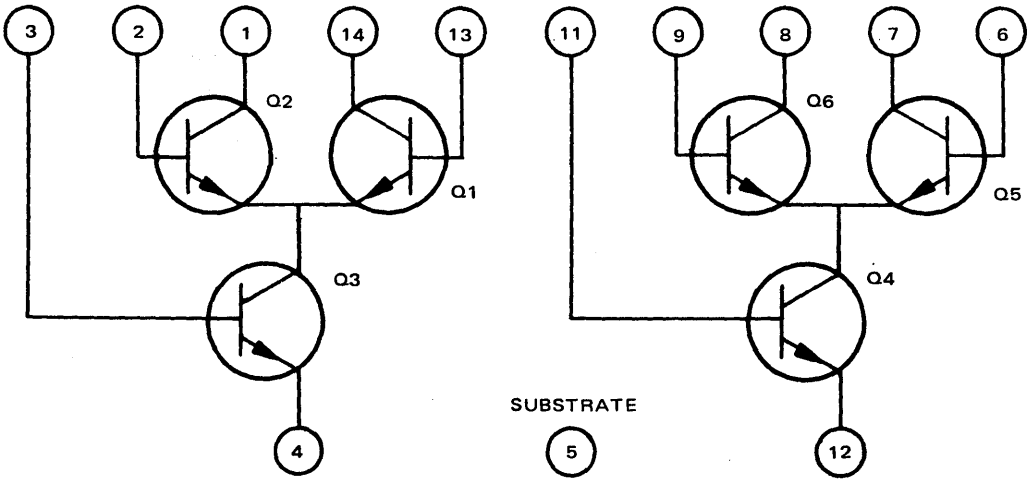

TEXAS INST SN7438N	AMPEX 586-784	QUADRUPLE 2-INPUT POSITIVE-NAND BUFFERS WITH OPEN-COLLECTOR OUTPUTS

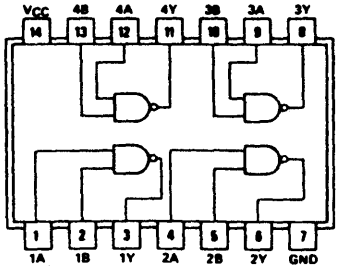

positive logic:
$Y = \overline{AB}$

TEXAS INSTRUMENTS SN 74123	AMPEX 586-797	DUAL RETRIGGERABLE MONOSTABLE MULTIVIBRATOR WITH CLEAR

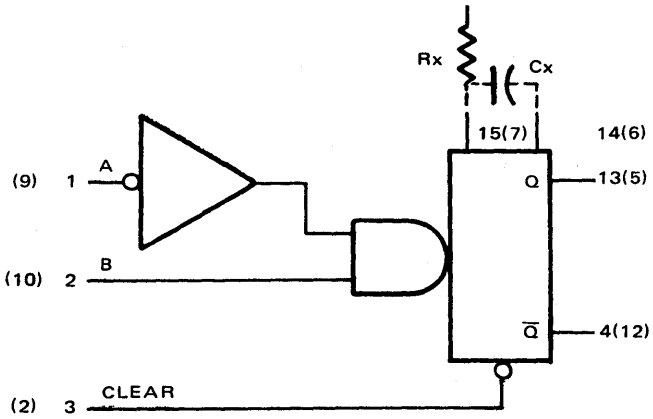

PIN 8 = GND
PIN 16 = +5V (V_{cc})

Rx = 50K MAX

Cx = NO RESTRICTION

PIN NUMBERS IN PARENTHESIS ARE FOR SECTION 2

$PW(ns) = 0.32\ Rx\ Cx\ (1 + \frac{0.7}{Rx})$ WITH Rx IN KΩ AND Cx IN pF.

NATIONAL SEMICONDUCTOR CD4024	AMPEX 586-807	7-STAGE RIPPLE CARRY BINARY COUNTER

Dual-In-Line Package

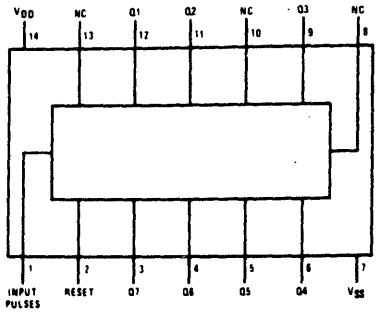

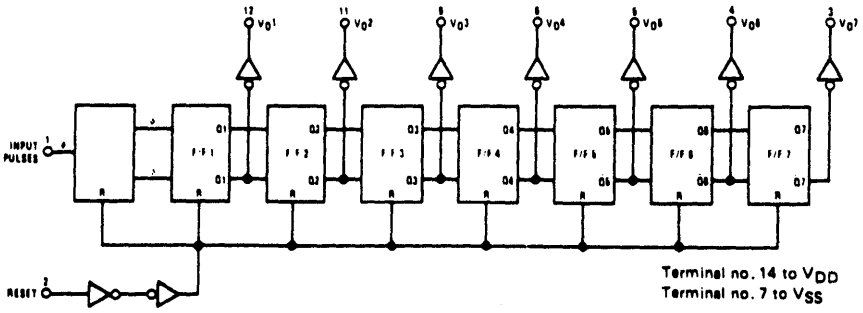

TEXAS INSTR SN 72558P	AMPEX 586-905	DUAL GENERAL PURPOSE OP. AMPL.

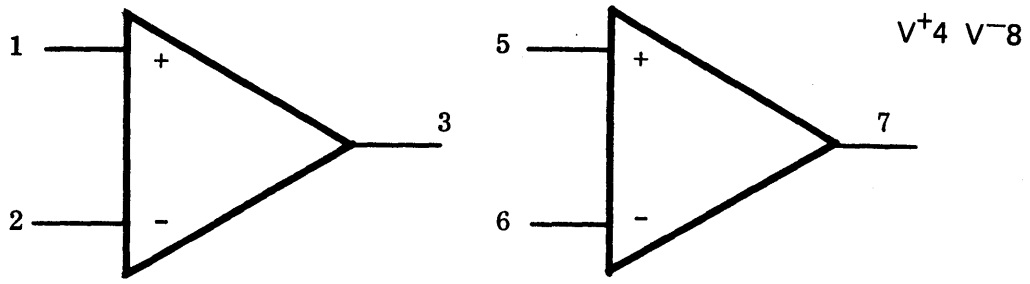

TEXAS INSTRUMENTS SN 7437 N	AMPEX 586-910	2-INPUT NAND BUFFER

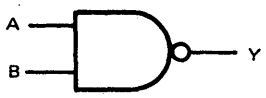

$Y = \overline{AB} = \overline{A}+\overline{B}$

A	1	4	9	12
B	2	5	10	13
Y	3	6	8	11

PIN 7 = GND

PIN 14 = V_{cc}

TEXAS INSTRUMENTS SN 7432	AMPEX 586-918	OR GATE

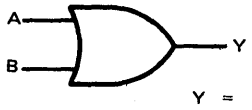

Y = A + B

PIN 7 = GND

PIN 14 = V_{cc}

TOTEM OUTPUT

A	B	Y
1	2	3
4	5	6
9	10	8
12	13	11

TEXAS INSTRUMENTS SN 74163	AMPEX 586-923	SYNCHRONOUS BINARY COUNTER

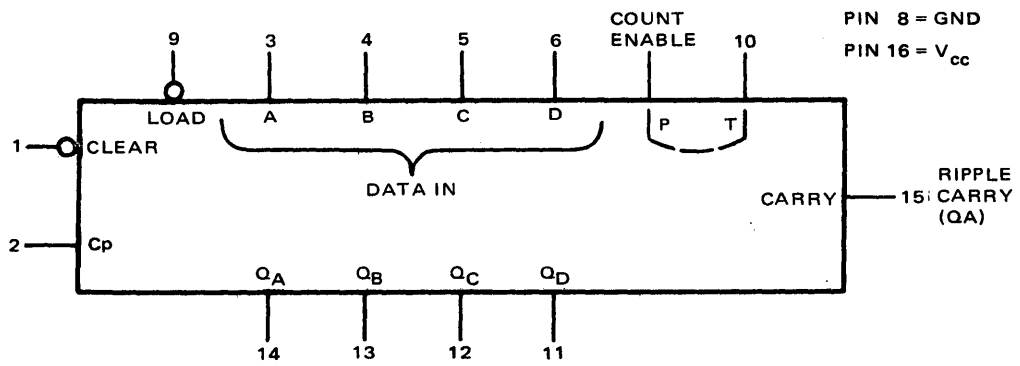

CLEAR AND LOAD SYNCHRONOUS WITH POSITIVE TRANSITION OF CLOCK PULSE.

TEXAS INSTRUMENTS SN74175N	AMPEX 586-925	HEX/QUADRUPLE D-TYPE FLIP-FLOPS WITH CLEAR

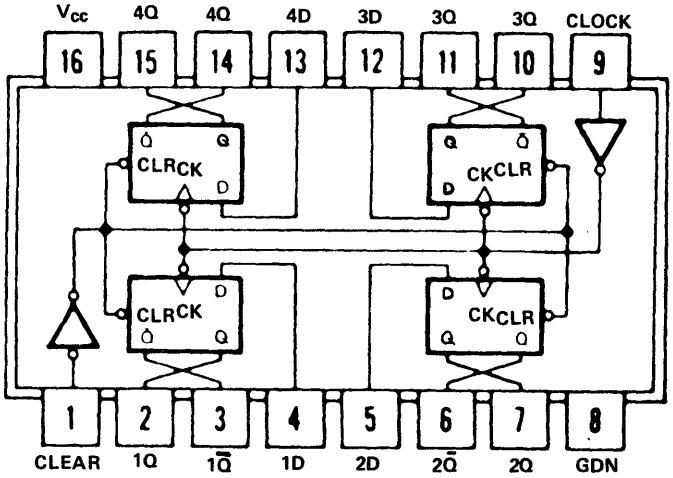

(EACH FLIP-FLOP)

INPUTS			OUTPUTS	
CLEAR	CLOCK	D	Q	$\bar{Q}$†
L	X	X	L	H
H	↑	H	H	L
H	↑	L	L	H
H	L	X	Q_0	$\bar{Q}_0$

H = high level (steady state)
L = low level (steady state)
X = irrelevant
↑ = transition from low to high level
Q_0 = the level of Q before the indicated steady state input conditions were established.
† = '175, 'LS175, and 'S175 only

TEXAS INSTR
SN 74153N

AMPEX
586-948

DUAL 4 LINE TO 1 LINE
DATA SELECTOR/MULTIPLEXER
TTL MSI

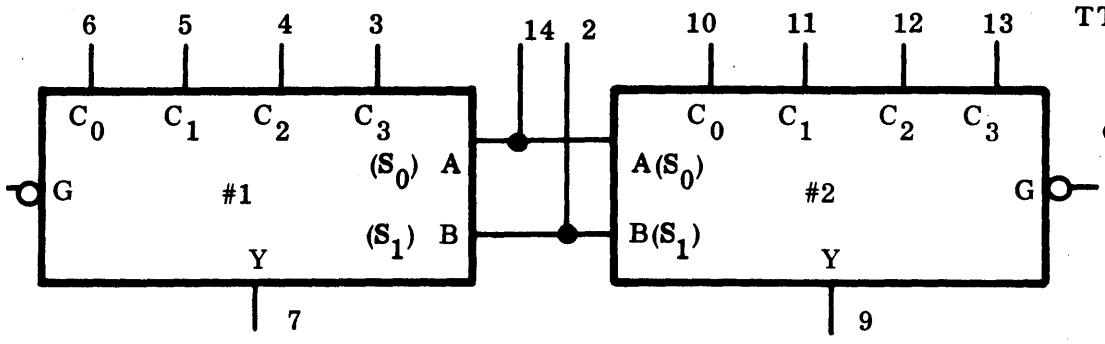

Vcc = 16
GND A

G low enables
H Y low

Y follows input selected by binary number at A(S0) and B(S1).

B	A	G	Y FOLLOWS
X	X	H	LOW
L	L	L	C0
L	H	L	C1
H	L	L	C2
H	H	L	C3

TEXAS INSTRUMENTS
SN74S112N

AMPEX
586-978

DUAL J-K NEGATIVE-EDGE-TRIGGERED
FLIP-FLOPS WITH PRESET AND CLEAR

FUNCTION TABLE

INPUTS					OUTPUTS	
PRESET	CLEAR	CLOCK	J	K	Q	$\bar{Q}$
L	H	X	X	X	H	L
H	L	X	X	X	L	H
L	L	X	X	X	H*	H*
H	H	↓	L	L	Q_0	$\bar{Q}_0$
H	H	↓	H	L	H	L
H	H	↓	L	H	L	H
H	H	↓	H	H	TOGGLE	
H	H	H	X	X	Q_0	Q_0

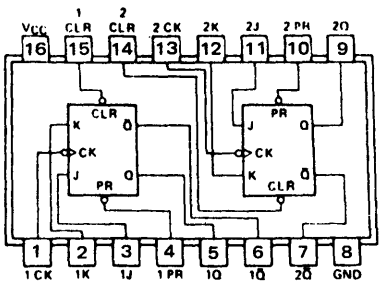

SN54LS112/SN74LS112(J, N, W)
SN54S112/SN74S112(J, N, W)

TEXAS INST
SN74S10N

AMPEX
587-018

TRIPLE 3-INPUT
POSITIVE=NAND GATE

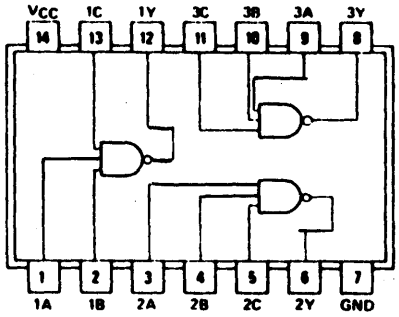

TEXAS INST SN74S157N	AMPEX 587-098	QUADRUPLE 2-LINE-TO-1-LINE DATA SELECTORS/MULTIPLEXERS

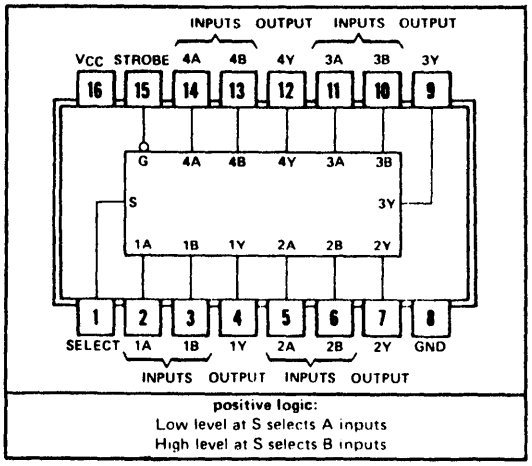

FUNCTION TABLE

INPUTS				OUTPUT Y	
STROBE	SELECT	A	B	'157, 'L157, 'LS157, 'S157	'LS158 'S158
H	X	X	X	L	H
L	L	L	X	L	H
L	L	H	X	H	L
L	H	X	L	L	H
L	H	X	H	H	L

H = high level, L = low level, X = irrelevant

MOTOROLA MC10124L	AMPEX 587-131	QUAD MTTL TO MECL TRANSLATOR

POSITIVE LOGIC

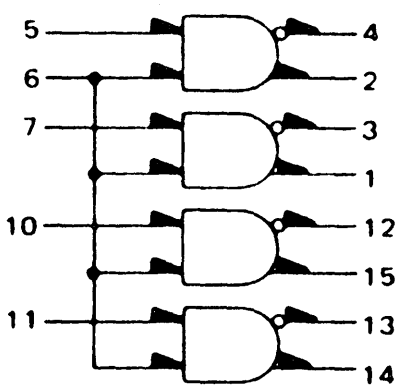

NEGATIVE LOGIC

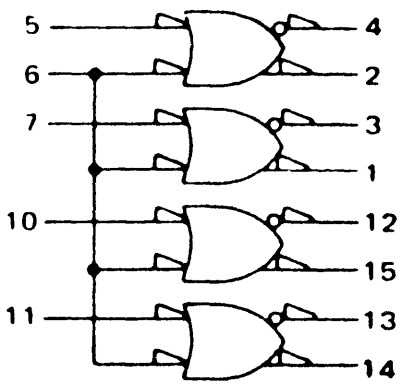

	Gnd	Pin 16
V_{CC}	(+5.0 Vdc)	Pin 9
V_{EE}	(-5.2 Vdc)	Pin 8

MOTOROLA MC10125	AMPEX 587-132	MECL TO MTTL TRANSLATOR

POSITIVE LOGIC

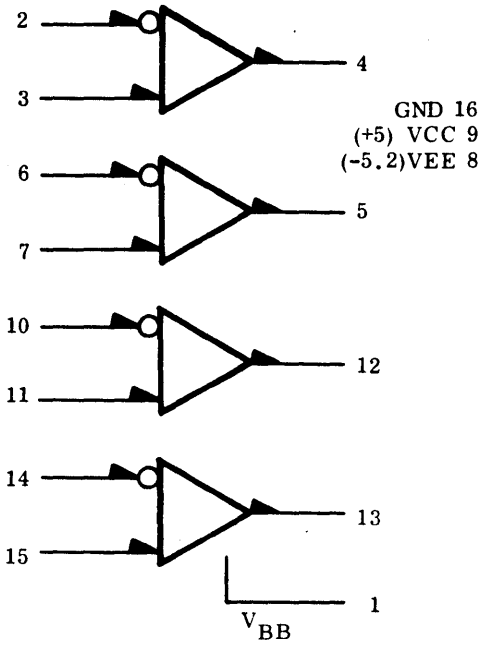

MOTOROLA	AMPEX	
MC 10116 L MC 10116 P	587-133 587-704	TRIPLE LINE RECEIVER ECL

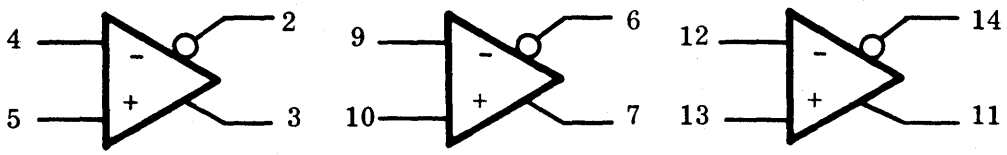

VBB 11 VEE 8
VCC_1 1 VCC_2 16

MOTOROLA
MC 10131 L

AMPEX
587-139

DUAL D FLIP FLOP
ECL

R.S. R	S	Q_{N+1}
L L		Qn
L H		H
H L		L
H H		*

Not Defined

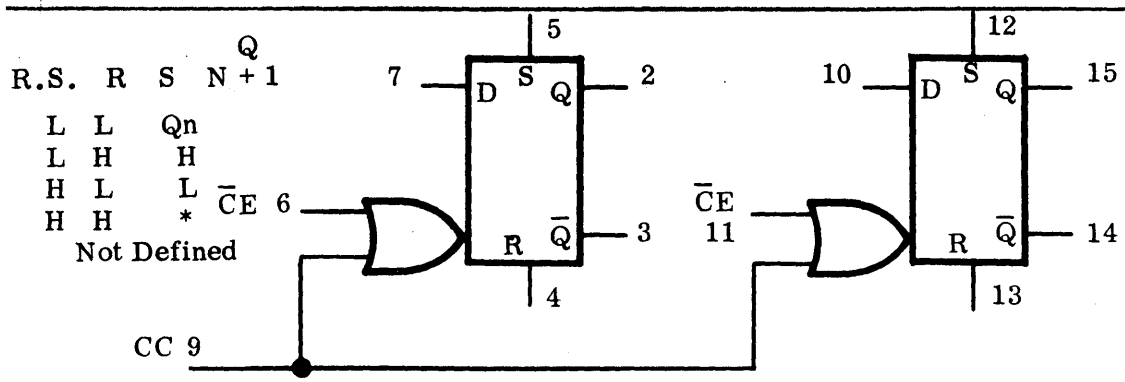

CLOCKED

C	D	Q_{N+1}
L	X	Qn
H	L	L
H	H	H

$C = \overline{C}E + CC$

Vcc1 = PIN 1
Vcc2 = PIN 16
Vee = PIN 8

TEXAS INST
SN7414

AMPEX
587-147

HEX SCHMITT-TRIGGER INVERTER

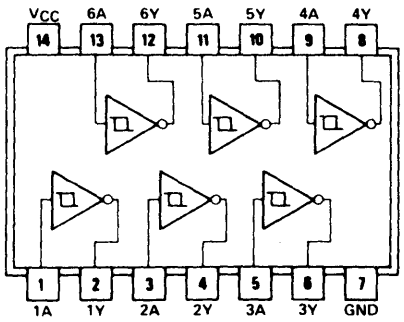

TEXAS INST SN74S86N	AMPEX 587-150	QUADRUPLE 2-INPUT EXCLUSIVE-OR GATES

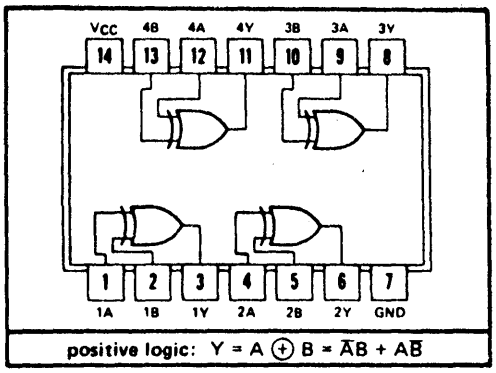

FUNCTION TABLE

INPUTS		OUTPUT
A	B	Y
L	L	L
L	H	H
H	L	H
H	H	L

H = high level, L = low level

TEXAS INST SN74S175N	AMPEX 587-152	HEX/QUADRUPLE D-TYPE FLIP-FLOPS WITH CLEAR

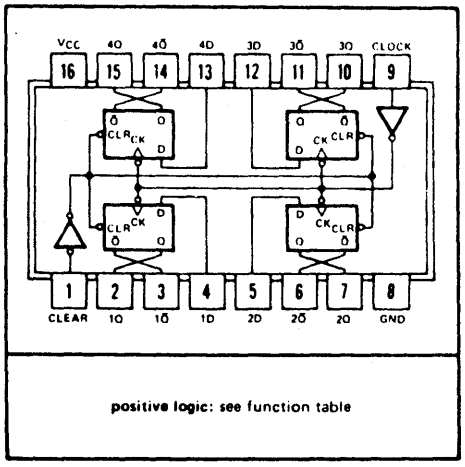

FUNCTION TABLE
(EACH FLIP-FLOP)

INPUTS			OUTPUTS	
CLEAR	CLOCK	D	Q	Q̄†
L	X	X	L	H
H	↑	H	H	L
H	↑	L	L	H
H	L	X	Q_0	$\bar{Q}_0$

H = high level (steady state)
L = low level (steady state)
X = irrelevant
↑ = transition from low to high level
Q_0 = the level of Q before the indicated steady-state input conditions were established.
† = '175, 'LS175, and 'S175 only

MOTOROLA MC10101 — AMPEX 587-203 — QUAD OR/NOR GATE

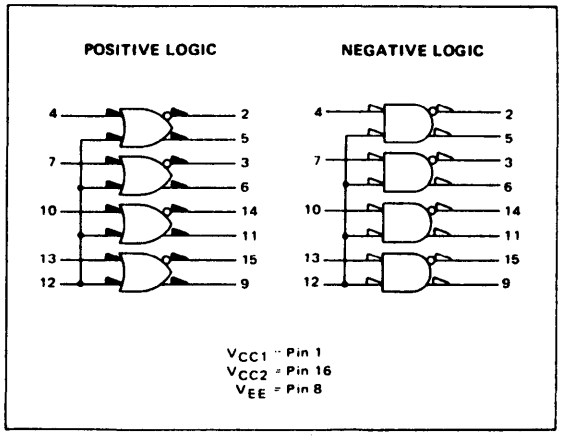

P_D = 25 mW typ/gate (No Load)
t_{pd} = 2.0 ns typ
Output Rise and Fall Time:
= 3.5 ns typ (10% - 90%)
= 2.0 ns typ (20% - 80%)

TEXAS INSTRUMENTS SN 74279 — AMPEX 587-266 — QUAD $\overline{S}$ · $\overline{R}$ LATCHES

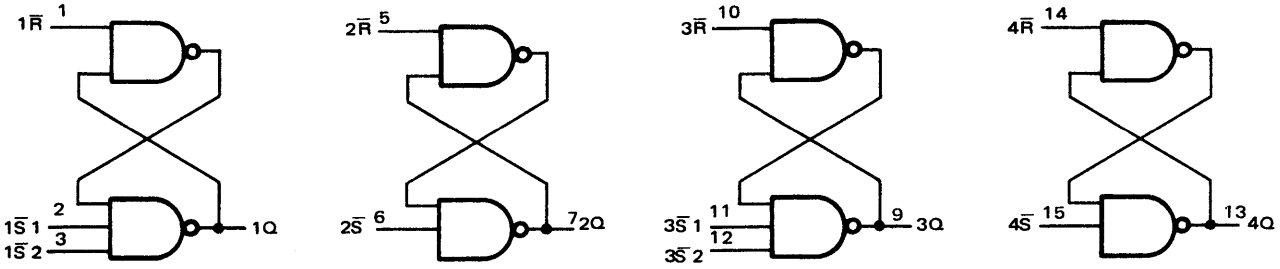

FUNCTION TABLE

INPUTS $\overline{S}$† $\overline{R}$	OUTPUT Q
H H	Q_0
L H	H
H L	L
L L	H*

PIN 16 = +5V (V_{CC})
PIN 8 = GND

H = HIGH
L = LOW LEVEL
Q_0 = THE LEVEL OF Q BEFORE THE INDICATED INPUT CONDITIONS WERE ESTABLISHED.
*THIS OUTPUT LEVEL IS PSEUDO STABLE, THAT IS, IT MAY NOT PERSIST WHEN THE $\overline{S}$ AND $\overline{R}$ INPUTS RETURN TO THEIR INACTIVE (HIGH) LEVEL.
†FOR LATCHES WITH DOUBLE $\overline{S}$ INPUTS:
H = BOTH $\overline{S}$ INPUTS HIGH
L = ONE OR BOTH $\overline{S}$ INPUTS LOW

TEXAS INST SN74S85N	AMPEX 587-278	4-BIT MAGNITUDE COMPARATOR

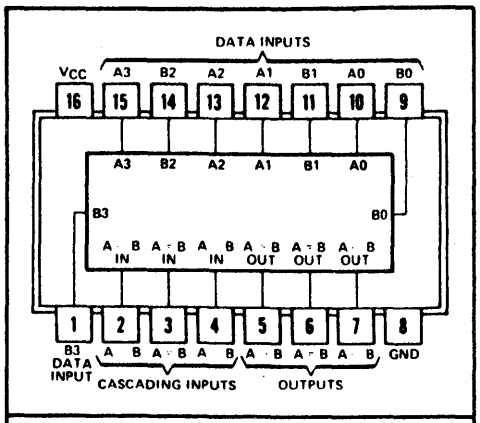

positive logic: see function tables

FUNCTION TABLES

COMPARING INPUTS				CASCADING INPUTS			OUTPUTS		
A3, B3	A2, B2	A1, B1	A0, B0	A > B	A < B	A = B	A > B	A < B	A = B
A3 > B3	X	X	X	X	X	X	H	L	L
A3 < B3	X	X	X	X	X	X	L	H	L
A3 = B3	A2 > B2	X	X	X	X	X	H	L	L
A3 = B3	A2 < B2	X	X	X	X	X	L	H	L
A3 = B2	A2 = B2	A1 > B1	X	X	X	X	H	L	L
A3 = B3	A2 = B2	A1 < B1	X	X	X	X	L	H	L
A3 = B3	A2 = B2	A1 = B1	A0 > B0	X	X	X	H	L	L
A3 = B3	A2 = B2	A1 = B1	A0 < B0	X	X	X	L	H	L
A3 = B3	A2 = B2	A1 = B1	A0 = B0	H	L	L	H	L	L
A3 = B3	A2 = B2	A1 = B1	A0 = B0	L	H	L	L	H	L
A3 = B3	A2 = B2	A1 = B1	A0 = B0	L	L	H	L	L	H

'85, 'S85

A3 = B3	A2 = B2	A1 = B1	A0 = B0	X	X	H	L	L	H
A3 = B3	A2 = B2	A1 = B1	A0 = B0	H	H	L	L	L	L
A3 = B3	A2 = B2	A1 = B1	A0 = B0	L	L	L	H	H	L

TEXAS INSTR SN 74S138N SN 74LS138N	AMPEX 587-151 587-279	3 TO 8 LINE DECODER/MULTIPLEXER

1. ALL OUTPUTS HIGH UNLESS ENABLE "1" HIGH AND ENABLES "2" AND "3" LOW.
2. WITH ENABLES SATISFIED (1)($\overline{2}$)($\overline{3}$);
   - LOW OUTPUT FOLLOWS BINARY INPUT
   - A,B,C: BINARY ZERO, Q_0 LOW
   - A HIGH, B,C, LOW (BINARY 1) Q_1 LOW

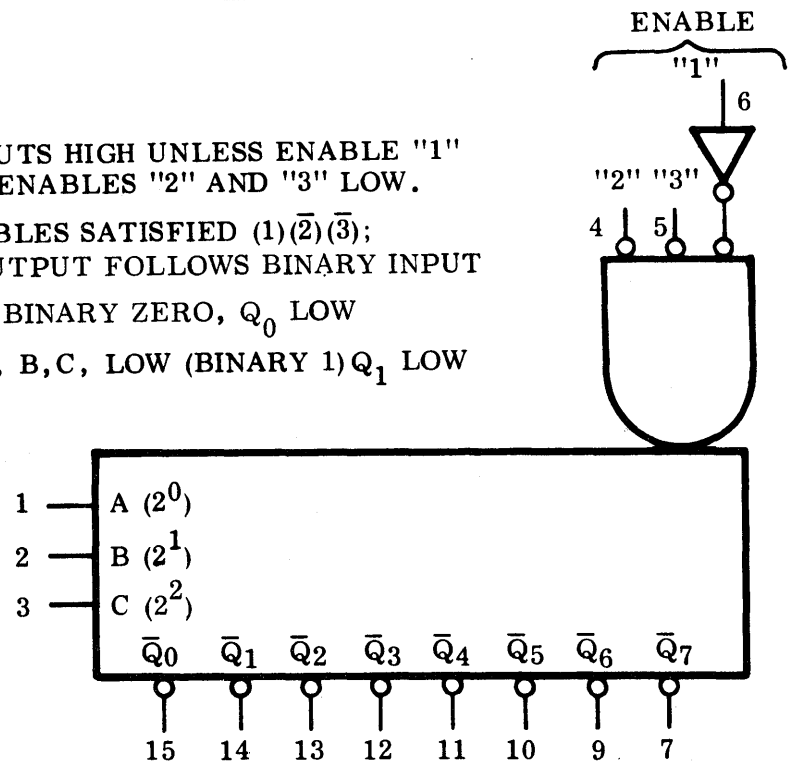

VCC 16
GND 8

TEXAS INST SN74S260N	AMPEX 587-282	QUAD 5 INPUT NOR

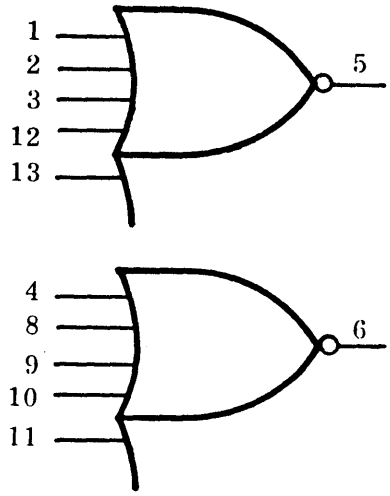

VCC 14
GND 7

$Y = \overline{A+B+C+D+E}$

SIGNETICS	AMPEX	HIGH SPEED ANALOG VOLTAGE
NE529A	589-263	COMPARATOR DIFFERENTIAL SCHOTTKY
NE529K	587-287	OUTPUT

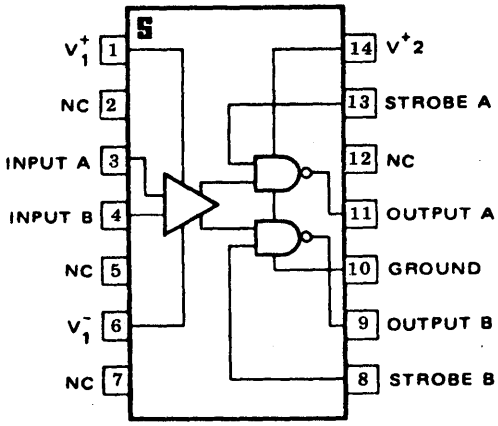

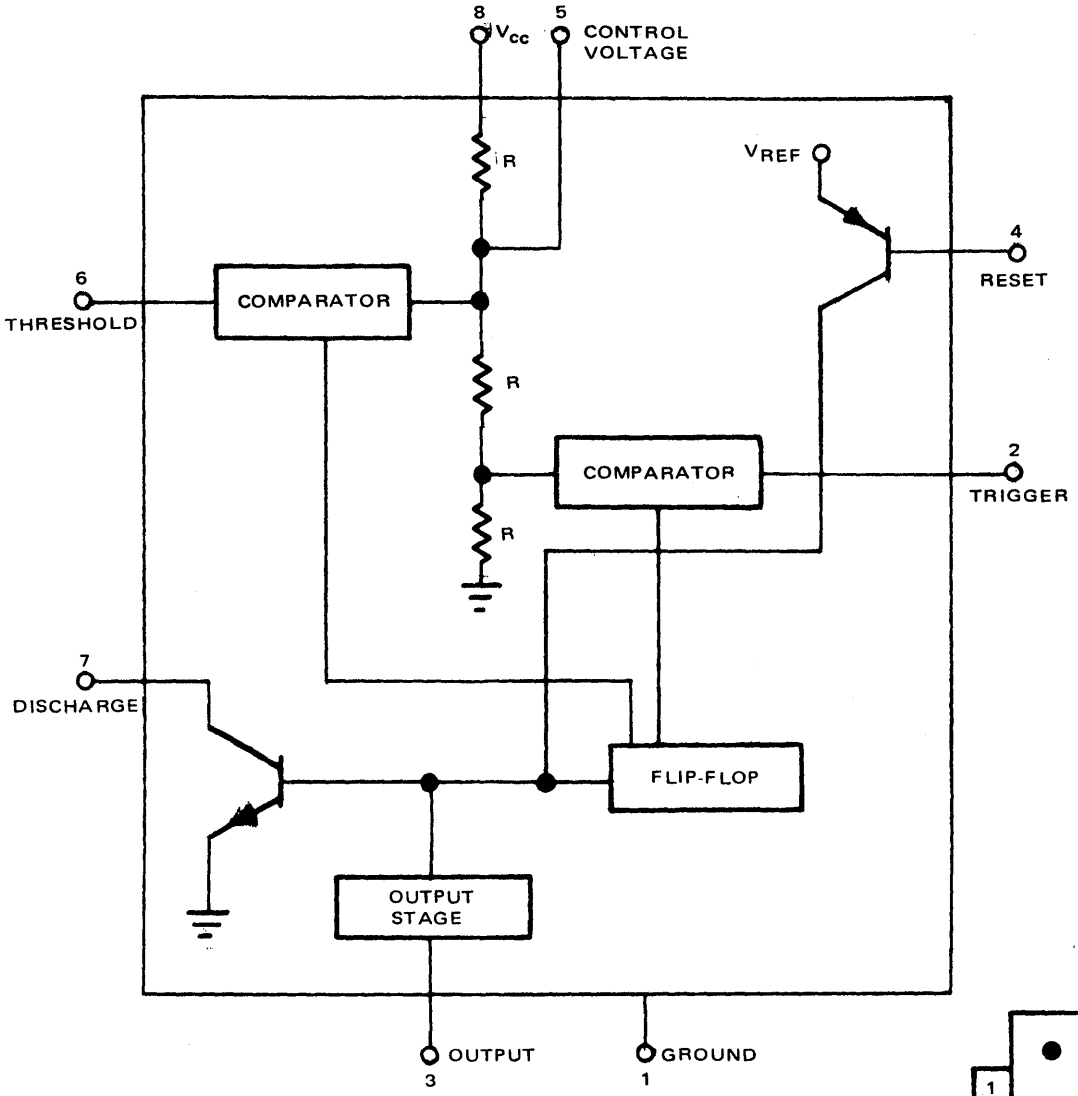

V PACKAGE
(TOP VIEW)

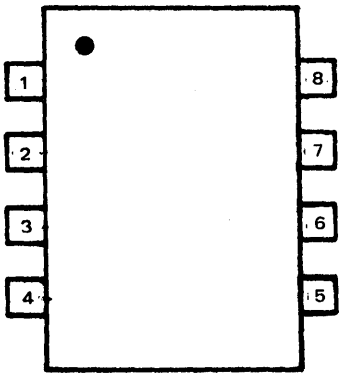

1. GROUND
2. TRIGGER
3. OUTPUT
4. RESET
5. CONTROL VOLTAGE
6. THRESHOLD
7. DISCHARGE
8. V_{cc}

TEXAS INST SN74LS139	AMPEX 587-410	DECODER/DEMULTIPLEXERS

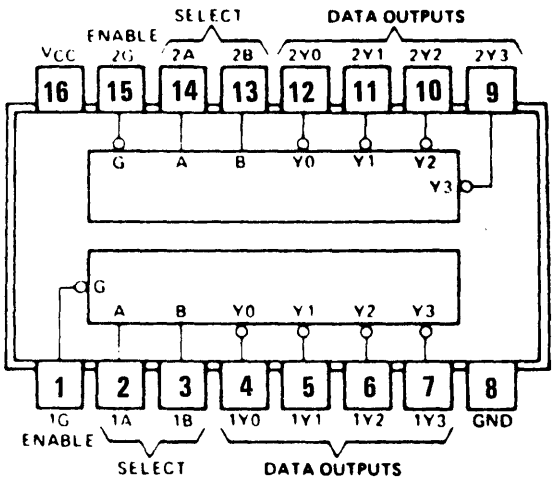

positive logic: see function table

FUNCTION TABLE

INPUTS			OUTPUTS			
ENABLE	SELECT					
G	B	A	Y0	Y1	Y2	Y3
H	X	X	H	H	H	H
L	L	L	L	H	H	H
L	L	H	H	L	H	H
L	H	L	H	H	L	H
L	H	H	H	H	H	L

H = high level, L = low level, X = irrelevant

TEXAS INST SN74221	AMPEX 587-431 587-537 589-377	NON-RETRIGGERABLE ONE SHOT SCHMITT TRIGGER INPUTS

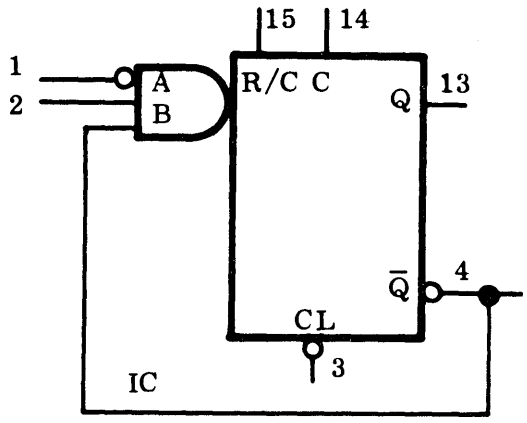

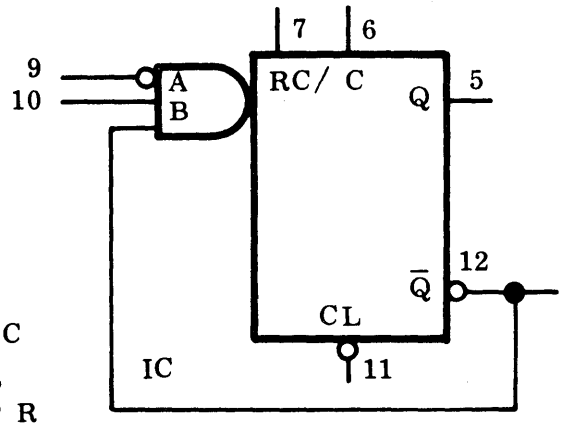

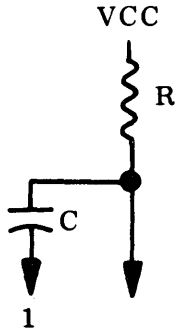

T = 0.7 RC

VCC 16
GND 8

TEXAS INSTR SN74S124	AMPEX 587-472	DUAL V.C.O.

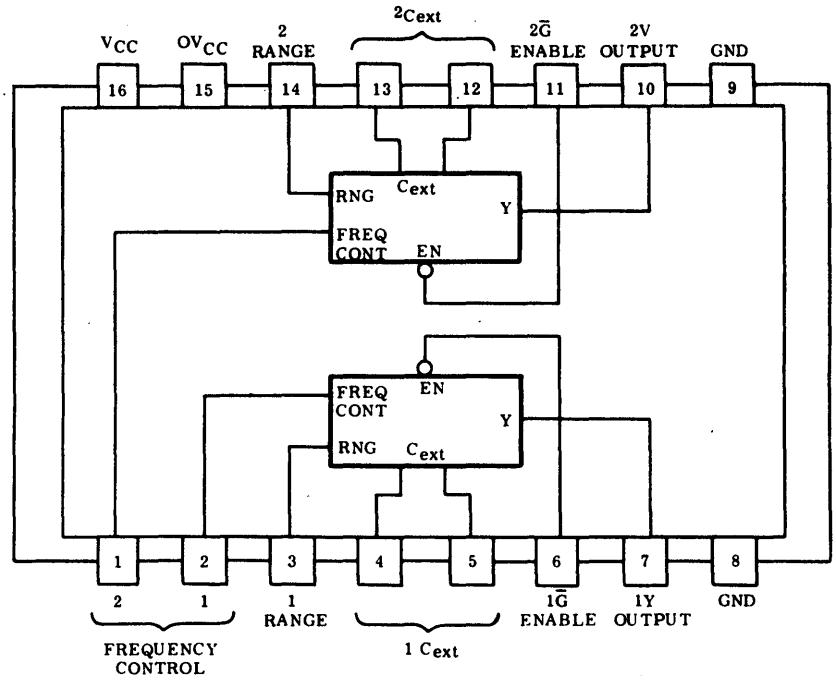

positive logic: While the enable input is low, the output is enabled. While the enable input is high, the output is high.

$f_o = \frac{500}{C_{ext}}$ where: f_o = output frequency in megahertz

C_{ext} = external capacitance in picofarads

TEXAS INSTRUMENTS SN74S32N	AMPEX 587-499	QUADRUPLE 2-INPUT POSITIVE-OR GATES

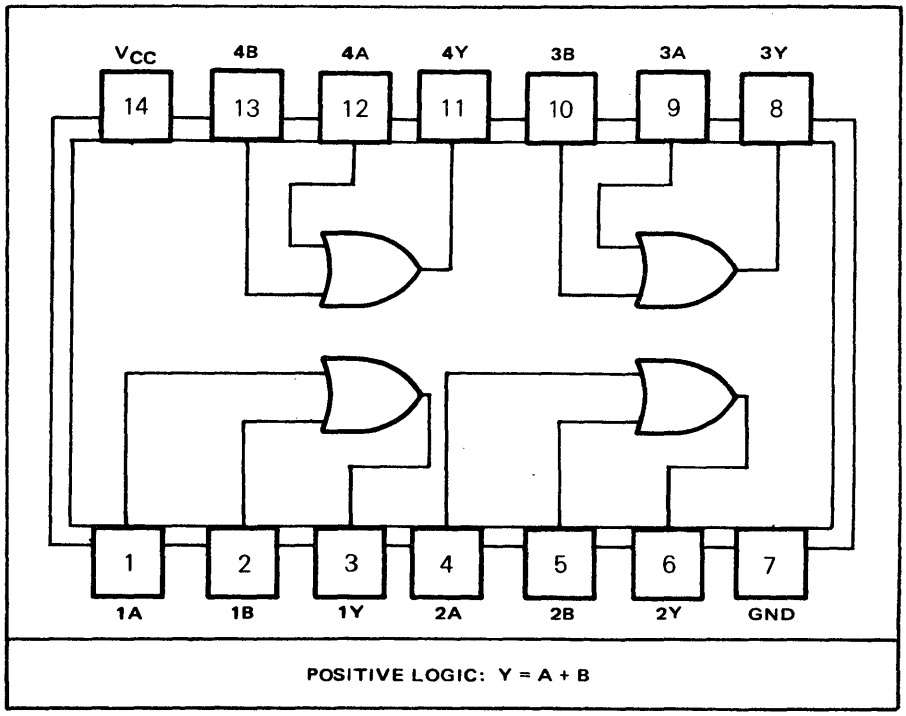

MOTOROLA MC10104	AMPEX 587-549	QUAD 2-INPUT AND GATE

P_D = 35 mW typ/gate (No load)
t_{pd} = 2.7 ns typ
Output Rise and Fall Times:
= 3.5 ns typ (10% - 90%)
= 2.0 ns typ (20% - 80%)

V_{CC1} = Pin 1
V_{CC2} = Pin 16
V_{EE} = Pin 8

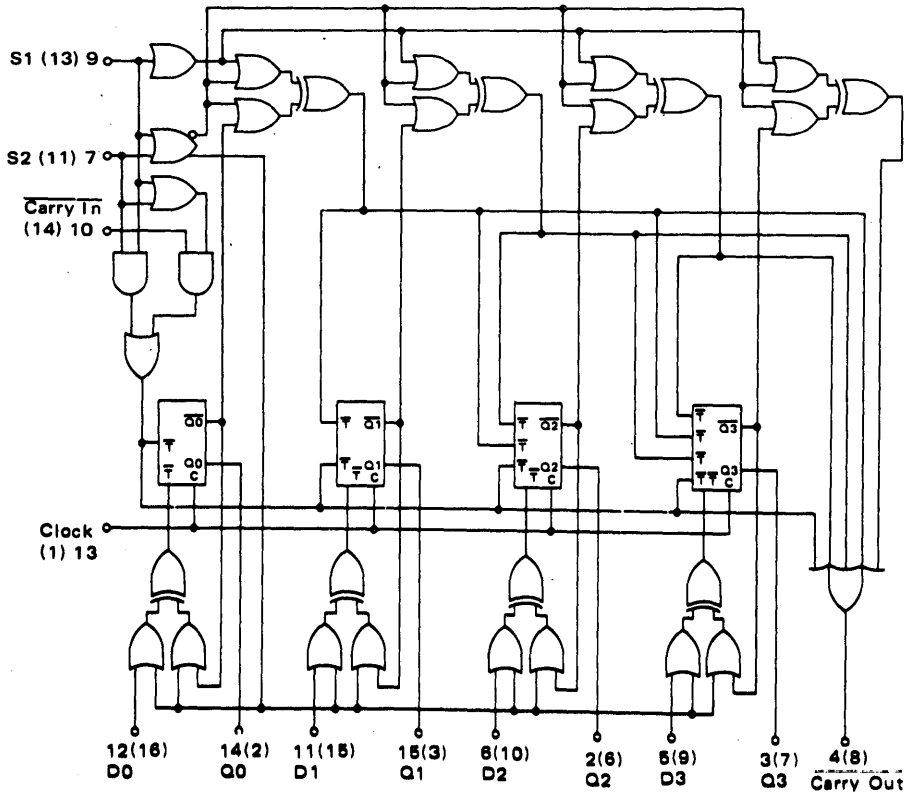

SEQUENTIAL TRUTH TABLE*

INPUTS								OUTPUTS				
S1	S2	D0	D1	D2	D3	Carry In	Clock **	Q0	Q1	Q2	Q3	Carry Out
L	L	L	L	H	H	Φ	H	L	L	H	H	L
L	H	Φ	Φ	Φ	Φ	L	H	H	L	H	H	H
L	H	Φ	Φ	Φ	Φ	L	H	L	H	H	H	H
L	H	Φ	Φ	Φ	Φ	L	H	H	H	H	H	L
L	H	Φ	Φ	Φ	Φ	H	L	H	H	H	H	H
L	H	Φ	Φ	Φ	Φ	H	H	H	H	H	H	H
H	H	Φ	Φ	Φ	Φ	Φ	H	H	H	H	H	H
L	L	H	H	L	L	Φ	H	H	H	L	L	L
H	L	Φ	Φ	Φ	Φ	L	H	L	H	L	L	H
H	L	Φ	Φ	Φ	Φ	L	H	H	L	L	L	H
H	L	Φ	Φ	Φ	Φ	L	H	L	L	L	L	L
H	L	Φ	Φ	Φ	Φ	L	H	H	H	H	H	H

Φ = Don't care.
* Truth table shows logic states assuming inputs vary in sequence shown from top to bottom.
** A clock H is defined as a clock input transition from a low to a high logic level.

V_{CC1} = Pin 1 (5)
V_{CC2} = Pin 16 (4)
V_{EE} = Pin 8 (12)

P_D = 625 mW typ/pkg (No Load)
f_{count} = 150 MHz typ
t_{pd} = 3.3 ns typ (C - Q)
= 7.0 ns typ (C - $\overline{C}_{out}$)
= 5.0 ns typ ($\overline{C}_{in}$ - $\overline{C}_{out}$)

MOTOROLA MC10176	AMPEX 587-551	HEX "D" MASTER SLAVE FLIP-FLOP

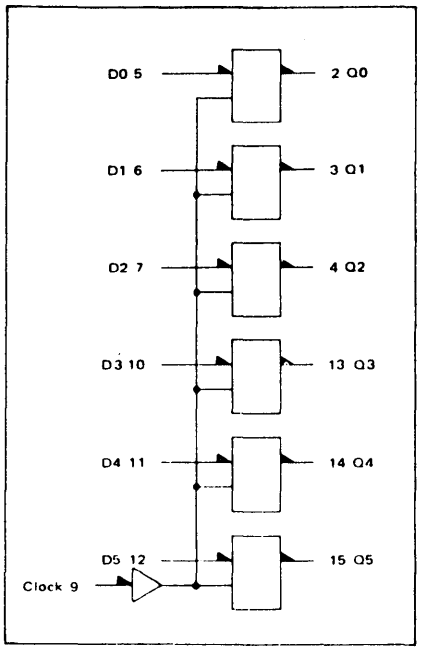

V_{CC1} = Pin 1
V_{CC2} = Pin 16
V_{EE} = Pin 8

CLOCKED TRUTH TABLE

C	D	Q_{n+1}
L	ϕ	Q_n
H*	L	L
H*	H	H

ϕ Don't Care

*A clock H is a clock transition from a low to a high state

MOTOROLA 12040	AMPEX 587-552	PHASE-FREQUENCY DETECTOR

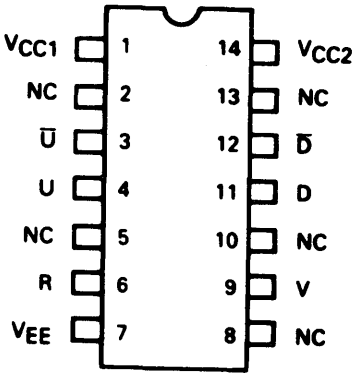

NC — No Connection

INPUT		OUTPUT			
R	V	U	D	Ū	D̄
0	0	X	X	X	X
0	1	X	X	X	X
1	1	X	X	X	X
0	1	X	X	X	X
1	1	1	0	0	1
0	1	1	0	0	1
1	1	1	0	0	1
1	0	1	0	0	1
1	1	0	0	1	1
1	0	0	0	1	1
1	1	0	1	1	0
1	0	0	1	1	0
1	1	0	1	1	0
0	1	0	1	1	0
1	1	0	0	1	0

X = Don't Care

MOTOROLA MC 10115 P	AMPEX 5 87-630	QUAD LINE RECEIVER

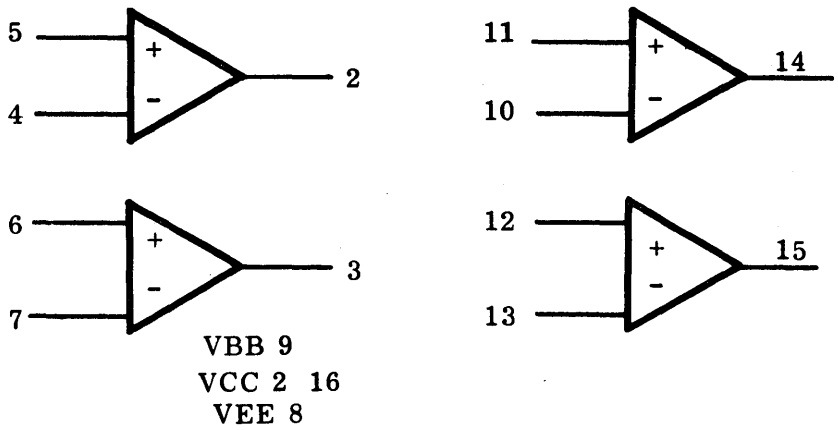

MOTOROLA MC10174	AMPEX 587-664	DUAL 4 TO 1 MULTIPLEXER

V_{CC1} = Pin 1
V_{CC2} = Pin 16
V_{EE} = Pin 8

TRUTH TABLE

ENABLE	ADDRESS INPUTS		OUTPUTS	
$\overline{E}$	B	A	Z	$\overline{W}$
H	ϕ	ϕ	L	L
L	L	L	X0	Y0
L	L	H	X1	Y1
L	H	L	X2	Y2
L	H	H	X3	Y3

ϕ = Don't Care

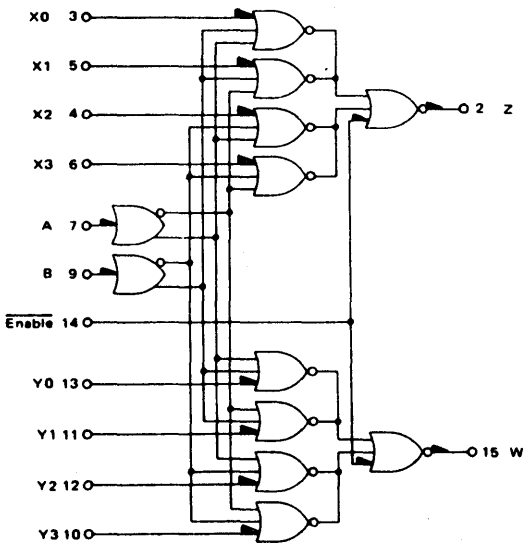

TEXAS INST
SN74LS670

AMPEX
587-705

4X4 REGISTER FILES WITH 3-STATE OUTPUTS

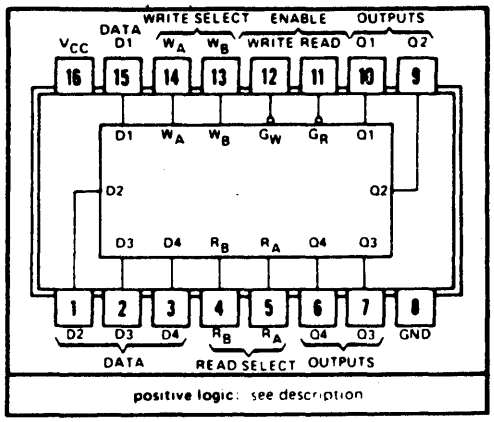

WRITE FUNCTION TABLE (SEE NOTES A, B, AND C)

WRITE INPUTS			WORD			
W_B	W_A	G_W	0	-1	2	3
L	L	L	Q = D	Q_0	Q_0	Q_0
L	H	L	Q_0	Q = D	Q_0	Q_0
H	L	L	Q_0	Q_0	Q = D	Q_0
H	H	L	Q_0	Q_0	Q_0	Q = D
X	X	H	Q_0	Q_0	Q_0	Q_0

READ FUNCTION TABLE (SEE NOTES A AND D)

READ INPUTS			OUTPUTS			
R_B	R_A	G_R	Q1	Q2	Q3	Q4
L	L	L	W0B1	W0B2	W0B3	W0B4
L	H	L	W1B1	W1B2	W1B3	W1B4
H	L	L	W2B1	W2B2	W2B3	W2B4
H	H	L	W3B1	W3B2	W3B3	W3B4
X	X	H	Z	Z	Z	Z

NOTES: A. H = high level, L = low level, X = irrelevant, Z = high impedance (off)
B. (Q = D) = The four selected internal flip flop outputs will assume the states applied to the four external data inputs
C. Q_0 the level of Q before the indicated input conditions were established
D. W0B1 The first bit of word 0, etc

RCA
CD 4053AE

AMPEX
587-723

TRIPLE 2 CHANNEL ANALOG MULTIPLEXER C-MOS

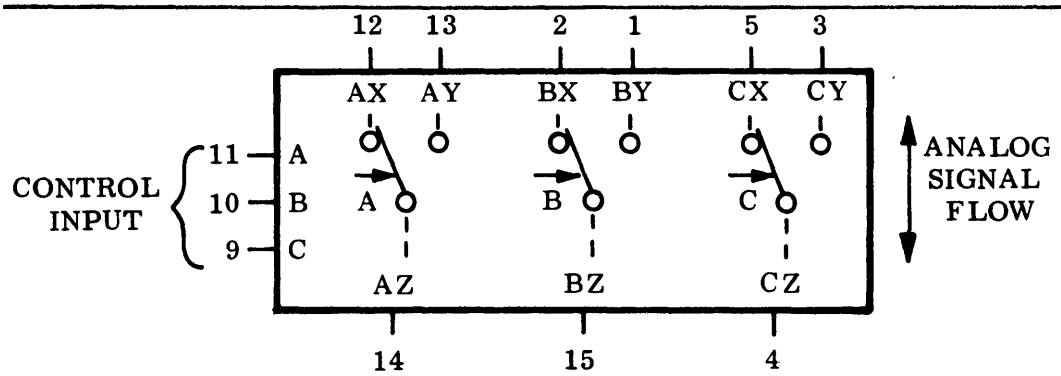

VDD 16
VEE 7

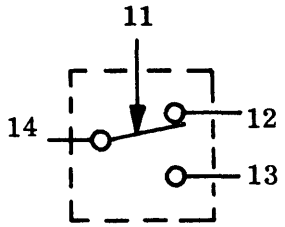

TYPICAL SCHEMATIC

HIGH ON A, B, OR C CONTROL UNIT CONNECTS A, B, OR C_Y TO A, B, OR C_Z BILATERALLY.

LOW ON CONTROL INPUTS CONNECT AX - AZ, BX - BZ, CX - CZ BILATERALLY.

FAIRCHILD 74LS02	AMPEX 587-750	QUADRUPLE 2-INPUT POSITIVE-NOR GATE

$Y = \overline{A+B}$

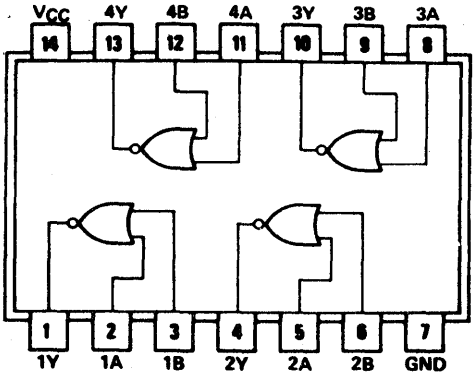

TEXAS INST SN74S08PC	AMPEX 587-751	QUADRUPLE 2-INPUT POSITIVE AND GATES

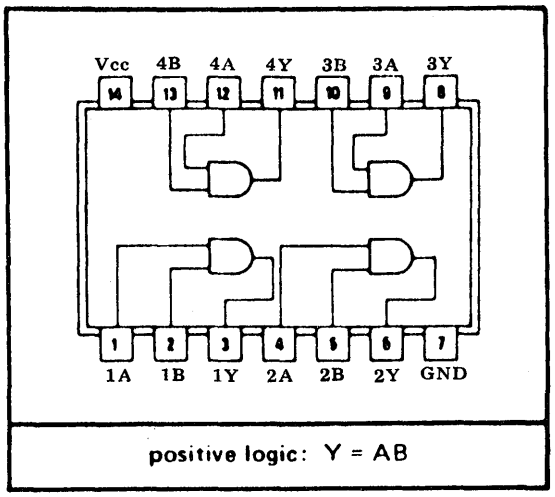

TEXAS INSTR SN74LS161	AMPEX 587-772	SYNCHRONOUS 4-BIT COUNTERS

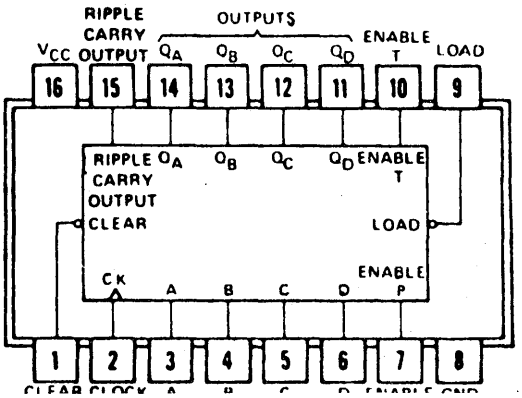

TEXAS INST SN74LS30N	AMPEX 587-778	8-INPUT POSITIVE-NAND GATES

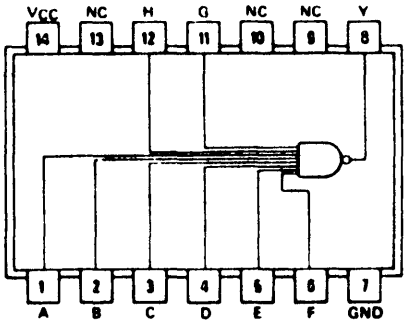

positive logic:

$Y = \overline{ABCDEFGH}$

TEXAS INSTR SN74LS253	AMPEX 587-797	DUAL 4-LINE-TO-I-LINE DATA SELECTORS/ MULTIPLEXERS WITH 3 STATE OUTPUTS

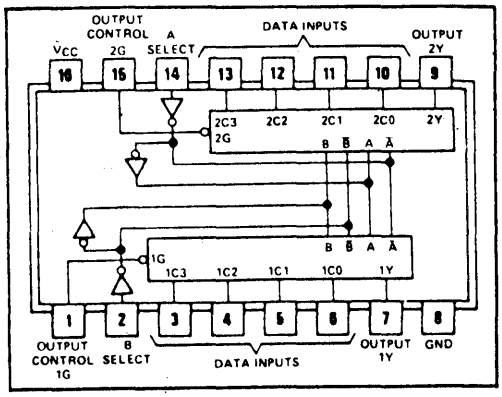

FUNCTION TABLE

SELECT INPUTS		DATA INPUTS				OUTPUT CONTROL	OUTPUT
B	A	C0	C1	C2	C3	G	Y
X	X	X	X	X	X	H	Z
L	L	L	X	X	X	L	L
L	L	H	X	X	X	L	H
L	H	X	L	X	X	L	L
L	H	X	H	X	X	L	H
H	L	X	X	L	X	L	L
H	L	X	X	H	X	L	H
H	H	X	X	X	L	L	L
H	H	X	X	X	H	L	H

Address inputs A and B are common to both sections.

H = high level, L = low level, X = irrelevant, Z = high impedance (off)

TEXAS INST SN 74LS283N	AMPEX 587-814	4 BIT BINARY ADDER WITH FAST CARRY

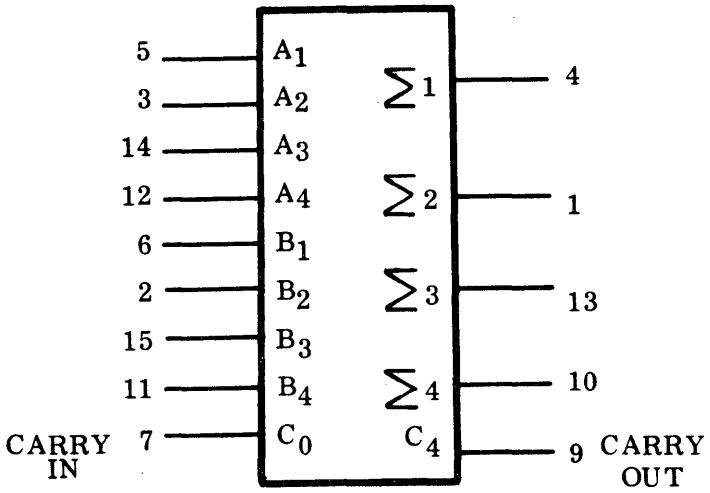

PIN 8 = GND
PIN 16 = +5V

TEXAS INSTRUMENTS SN75189	AMPEX 587-856	QUAD LINE RECEIVER

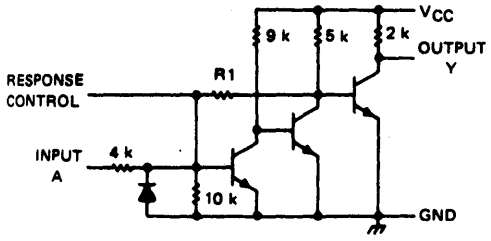

	SN75189	SN75189A
R1	10 k	2 k

Resistor values shown are nominal and in ohms.

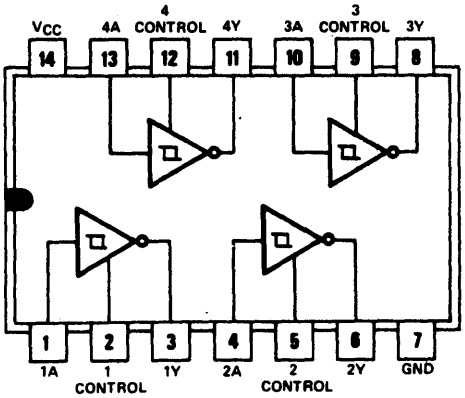

positive logic: $Y = \overline{A}$

FAIRCHILD 74LS164	AMPEX 587-895	8-BIT PARALLEL-OUT SERIAL SHIFT REGISTER

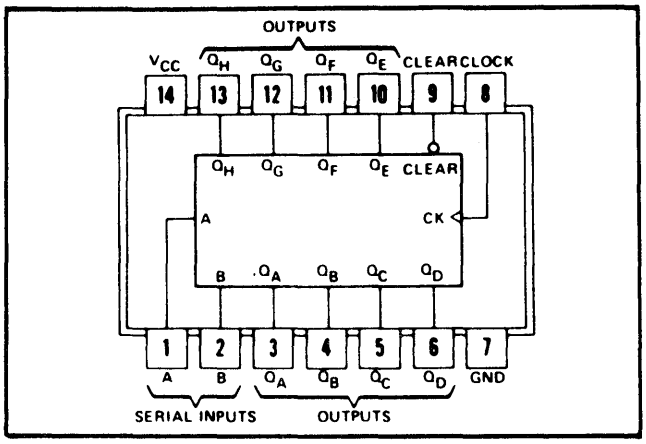

FUNCTION TABLE

INPUTS				OUTPUTS		
CLEAR	CLOCK	A	B	Q_A	Q_B ...	Q_H
L	X	X	X	L	L	L
H	L	X	X	Q_{A0}	Q_{B0}	Q_{H0}
H	↑	H	H	H	Q_{An}	Q_{Gn}
H	↑	L	X	L	Q_{An}	Q_{Gn}
H	↑	X	L	L	Q_{An}	Q_{Gn}

H = high level (steady state), L = low level (steady state)
X = irrelevant (any input, including transitions)
↑ = transition from low to high level.
Q_{A0}, Q_{B0}, Q_{H0} = the level of Q_A, Q_B, or Q_H, respectively, before the indicated steady-state input conditions were established.
Q_{An}, Q_{Gn} = the level of Q_A or Q_G before the most-recent ↑ transition of the clock; indicates a one-bit shift.

PRECISION MONOLITHIC DAC 08CZ	AMPEX 587-896	8 BIT D-A CONVERTER

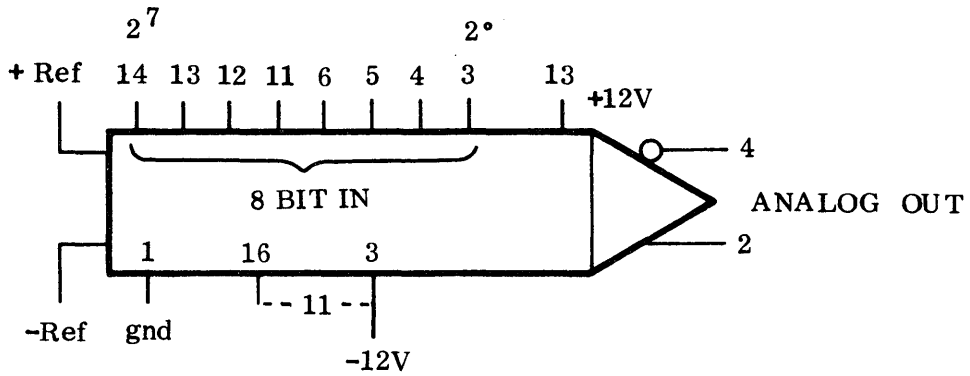

RCA CA3080	AMPEX 587-932	OPERATIONAL TRANSCONDUCTANCE AMPLIFIER

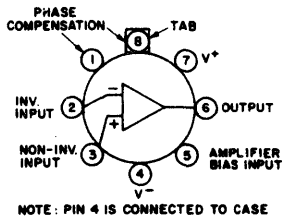

FAIRCHILD 74LS124	AMPEX 587-973	DUAL VOLTAGE-CONTROLLED OSCILLATORS

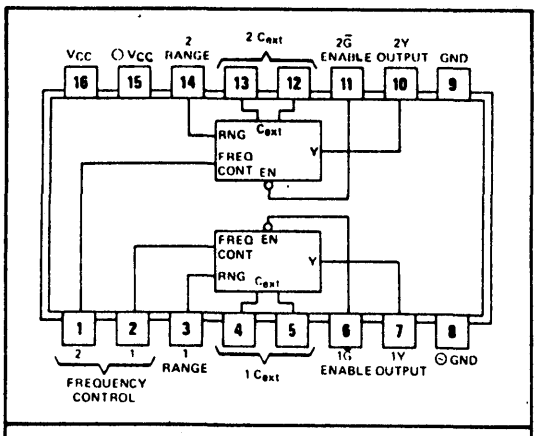

positive logic: While the enable input is low, the output is enabled. While the enable input is high, the output is high.

TEXAS INSTRUMENTS SN74LSI60N	AMPEX 589-016	SYNCHRONOUS 4-BIT COUNTERS

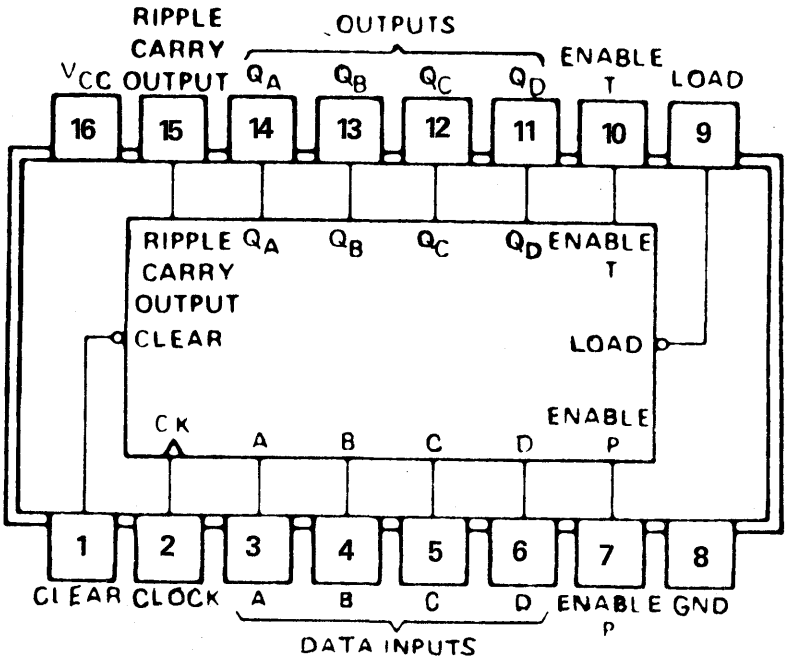

TEXAS INST SN74LS42N	AMPEX 589-088	4-LINE-TO-10-LINE DECODERS (1-OF-10)

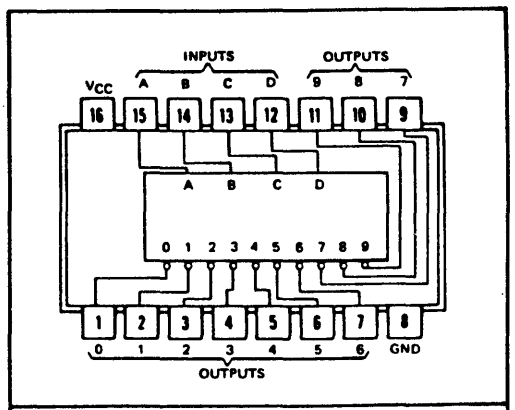

positive logic: see function table

NO.	'42A, 'L42, 'LS42 BCD INPUT				ALL TYPES DECIMAL OUTPUT									
	D	C	B	A	0	1	2	3	4	5	6	7	8	9
0	L	L	L	L	L	H	H	H	H	H	H	H	H	H
1	L	L	L	H	H	L	H	H	H	H	H	H	H	H
2	L	L	H	L	H	H	L	H	H	H	H	H	H	H
3	L	L	H	H	H	H	H	L	H	H	H	H	H	H
4	L	H	L	L	H	H	H	H	L	H	H	H	H	H
5	L	H	L	H	H	H	H	H	H	L	H	H	H	H
6	L	H	H	L	H	H	H	H	H	H	L	H	H	H
7	L	H	H	H	H	H	H	H	H	H	H	L	H	H
8	H	L	L	L	H	H	H	H	H	H	H	H	L	H
9	H	L	L	H	H	H	H	H	H	H	H	H	H	L
INVALID	H	L	H	L	H	H	H	H	H	H	H	H	H	H
	H	L	H	H	H	H	H	H	H	H	H	H	H	H
	H	H	L	L	H	H	H	H	H	H	H	H	H	H
	H	H	L	H	H	H	H	H	H	H	H	H	H	H
	H	H	H	L	H	H	H	H	H	H	H	H	H	H
	H	H	H	H	H	H	H	H	H	H	H	H	H	H

TEXAS INST SN74LS194	AMPEX 589-091	4-BIT BIDIRECTIONAL UNIVERSAL SHIFT REGISTERS

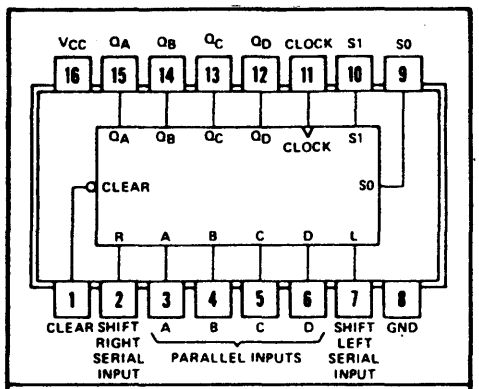

positive logic: see function table

FUNCTION TABLE

INPUTS										OUTPUTS			
CLEAR	MODE S1	MODE S0	CLOCK	SERIAL LEFT	SERIAL RIGHT	PARALLEL A	PARALLEL B	PARALLEL C	PARALLEL D	Q_A	Q_B	Q_C	Q_D
L	X	X	X	X	X	X	X	X	X	L	L	L	L
H	X	X	L	X	X	X	X	X	X	Q_{A0}	Q_{B0}	Q_{C0}	Q_{D0}
H	H	H	↑	X	X	a	b	c	d	a	b	c	d
H	L	H	↑	X	H	X	X	X	X	H	Q_{An}	Q_{Bn}	Q_{Cn}
H	L	H	↑	X	L	X	X	X	X	L	Q_{An}	Q_{Bn}	Q_{Cn}
H	H	L	↑	H	X	X	X	X	X	Q_{Bn}	Q_{Cn}	Q_{Dn}	H
H	H	L	↑	L	X	X	X	X	X	Q_{Bn}	Q_{Cn}	Q_{Dn}	L
H	L	L	X	X	X	X	X	X	X	Q_{A0}	Q_{B0}	Q_{C0}	Q_{D0}

H = high level (steady state)
L = low level (steady state)
X = irrelevant (any input, including transitions)
↑ = transition from low to high level
a, b, c, d = the level of steady-state input at inputs A, B, C, or D, respectively.
Q_{A0}, Q_{B0}, Q_{C0}, Q_{D0} = the level of Q_A, Q_B, Q_C, or Q_D, respectively, before the indicated steady-state input conditions were established.
Q_{An}, Q_{Bn}, Q_{Cn}, Q_{Dn} = the level of Q_A, Q_B, Q_C, respectively, before the most-recent ↑ transition of the clock.

TEXAS INSTRUMENTS SN74S195N	AMPEX 589-133	4-BIT PARALLEL-ACCESS SHIFT REGISTER

.J OR N DUAL-IN-LINE OR
W FLAT PACKAGE (TOP VIEW)

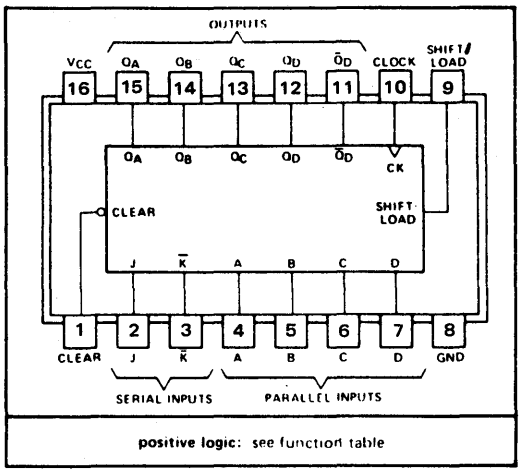

positive logic: see function table

FUNCTION TABLE

INPUTS									OUTPUTS				
CLEAR	SHIFT/ LOAD	CLOCK	SERIAL		PARALLEL				Q_A	Q_B	Q_C	Q_D	$\bar{Q}_D$
			J	$\bar{K}$	A	B	C	D					
L	X	X	X	X	X	X	X	X	L	L	L	L	H
H	L	↑	X	X	a	b	c	d	a	b	c	d	$\bar{d}$
H	H	L	X	X	X	X	X	X	Q_{A0}	Q_{B0}	Q_{C0}	Q_{D0}	$\bar{Q}_{D0}$
H	H	↑	L	H	X	X	X	X	Q_{A0}	Q_{A0}	Q_{Bn}	Q_{Cn}	$\bar{Q}_{Cn}$
H	H	↑	L	L	X	X	X	X	L	Q_{An}	Q_{Bn}	Q_{Cn}	$\bar{Q}_{Cn}$
H	H	↑	H	H	X	X	X	X	H	Q_{An}	Q_{Bn}	Q_{Cn}	$\bar{Q}_{Cn}$
H	H	↑	H	L	X	X	X	X	$\bar{Q}_{An}$	Q_{An}	Q_{Bn}	Q_{Cn}	$\bar{Q}_{Cn}$

H = high level (steady state)
L = low level (steady state)
X = irrelevant (any input, including transitions)
↑ = transition from low to high level
a, b, c, d = the level of steady state input at A, B, C, or D, respectively
Q_{A0}, Q_{B0}, Q_{C0}, Q_{D0} = the level of Q_A, Q_B, Q_C, or Q_D, respectively, before the indicated steady state input conditions were established
Q_{An}, Q_{Bn}, Q_{Cn} = the level of Q_A, Q_B, or Q_C, respectively, before the most-recent transition of the clock

ADVANCE MICRO DEVICES AM74S381	AMPEX 589-224	ARITHMETIC LOGIC UNIT/FUNCTION GENERATOR

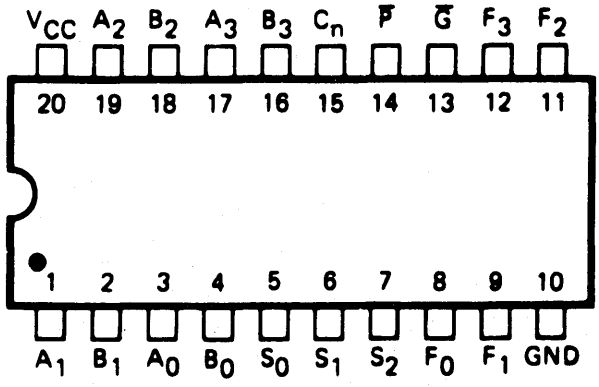

TEXAS INSTRUMENTS SN74LS192	AMPEX 589-233	SYNCHRONOUS 4-BIT UP/DOWN COUNTERS (DUAL CLOCK WITH CLEAR)

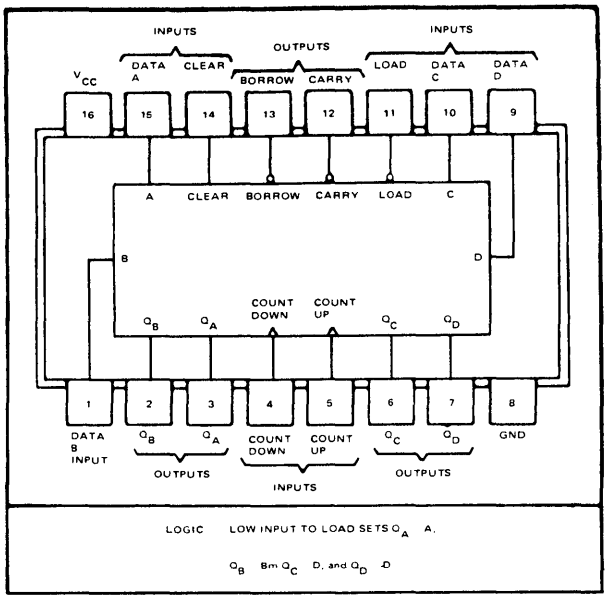

SIGNETICS NE529A NE529K	AMPEX 589-263 587-287	HIGH SPEED ANALOG VOLTAGE COMPARATOR DIFFERENTIAL SCHOTTKY OUTPUT

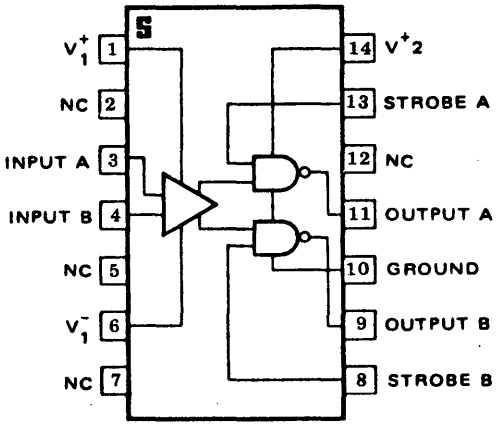

FAIRCHILD	AMPEX	HEX INVERTER
F4069	589-301	

Vss = OV Vdd = 5-15V

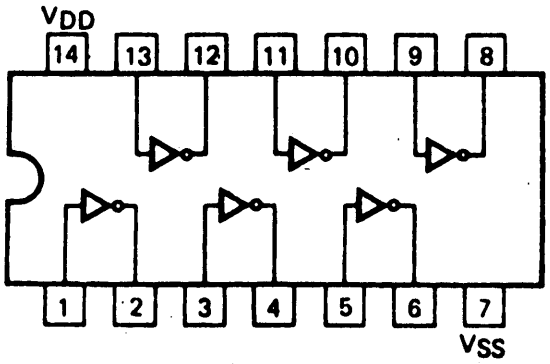

TEXAS INST	AMPEX	OCTAL D-TYPE FLIP-FLOP WITH CLEAR
SN74LS273N	589-331	

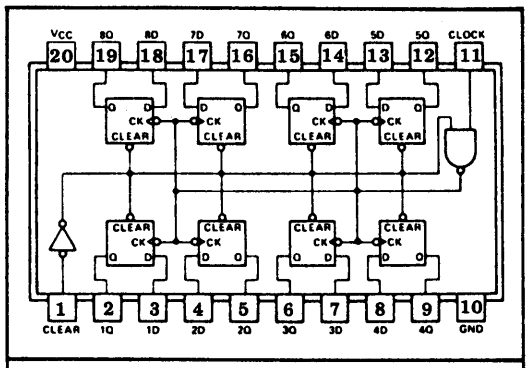

positive logic: see function table

FUNCTION TABLE
(EACH FLIP-FLOP)

INPUTS			OUTPUT
CLEAR	CLOCK	D	Q
L	X	X	L
H	↑	H	H
H	↑	L	L
H	L	X	Q_0

H = high level (steady state)
L = low level (steady state)
X = irrelevant
↑ = transition from low to high level
Q_0 = the level of Q before the indicated steady state input conditions were established.

TEXAS INST	AMPEX	DUAL 4-BIT DECADE AND BINARY COUNTERS
SN74LS393N	589-334	

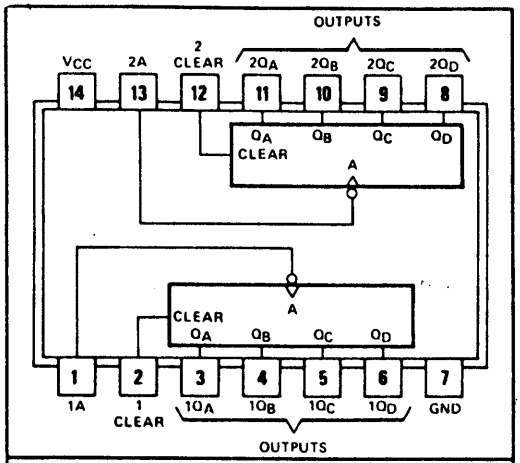

positive logic: High input to clear resets all four outputs low

COUNT	OUTPUT			
	Q_D	Q_C	Q_B	Q_A
0	L	L	L	L
1	L	L	L	H
2	L	L	H	L
3	L	L	H	H
4	L	H	L	L
5	L	H	L	H
6	L	H	H	L
7	L	H	H	H
8	H	L	L	L
9	H	L	L	H
10	H	L	H	L
11	H	L	H	H
12	H	H	L	L
13	H	H	L	H
14	H	H	H	L
15	H	H	H	H

MOTOROLA TMS2716	AMPEX 589-376	2048 X 8-BIT ERASABLE PROM

PIN ASSIGNMENT

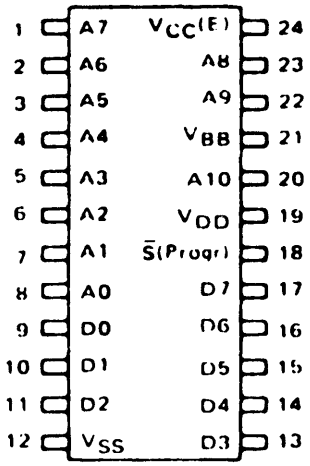

TEXAS INST	AMPEX	JFET-INPUT OPERATIONAL
TL082CP	589-427	AMPLIFIER

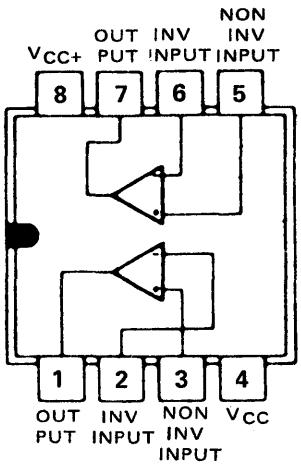

NATIONAL SEMI	AMPEX	OPERATIONAL AMPLIFIERS/BUFFERS
LM358N	589-438	

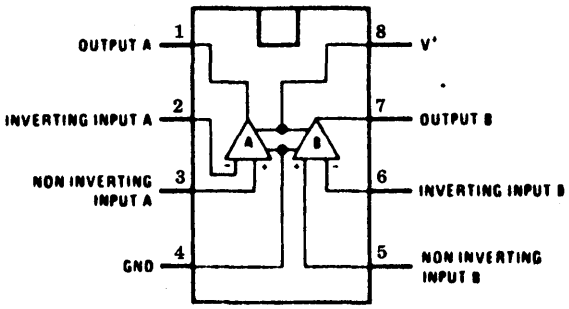

TEXAS INSTRUMENTS	AMPEX	LOOK-AHEAD CARRY
SN74S182	589-448	GENERATOR

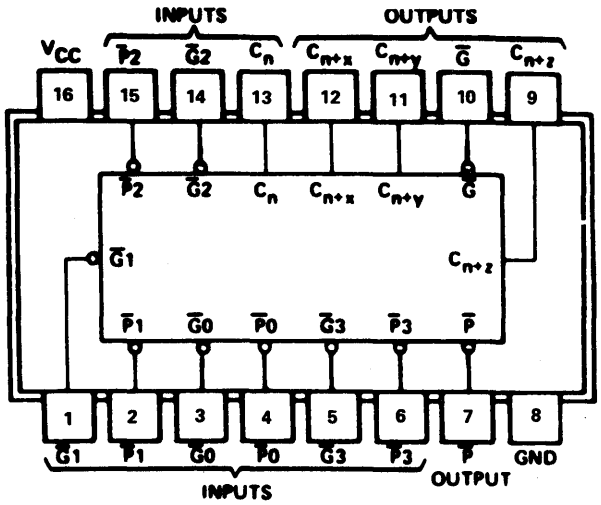

PIN DESIGNATIONS

ALTERNATIVE	DESIGNATIONS†	PIN NOS.	FUNCTION
$\bar{G}0, \bar{G}1, \bar{G}2, \bar{G}3$	G0, G1, G2, G3	3, 1, 14, 5	CARRY GENERATE INPUTS
$\bar{P}0, \bar{P}1, \bar{P}2, \bar{P}3$	P0, P1, P2, P3	4, 2, 15, 6	CARRY PROPAGATE INPUTS
C_n	$\bar{C}_n$	13	CARRY INPUT
$C_{n+x}, C_{n+y}, C_{n+z}$	$\bar{C}_{n+x}, \bar{C}_{n+y}, \bar{C}_{n+z}$	12, 11, 9	CARRY OUTPUTS
$\bar{G}$	Y	10	CARRY GENERATE OUTPUT
$\bar{P}$	X	7	CARRY PROPAGATE OUTPUT
V_{CC}		16	SUPPLY VOLTAGE
GND		8	GROUND

TEXAS INST SN74LS244	AMPEX 589-449	OCTAL BUFFERS/LINE DRIVERS/ LINE RECEIVERS NONINVERTED 3-STATE OUTPUTS

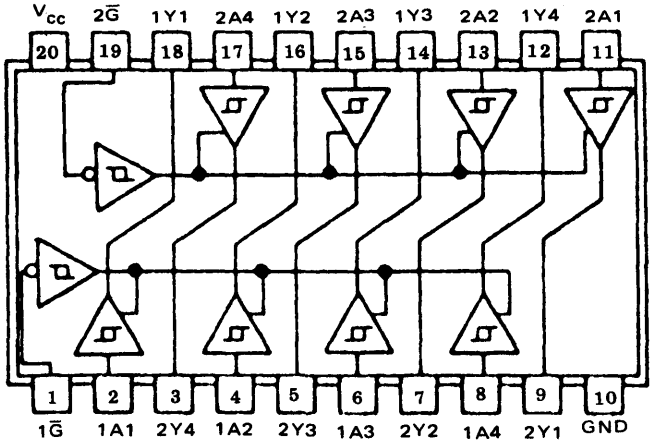

TEXAS INST SN74245	AMPEX 589-457	OCTAL BUS TRANSCEIVERS WITH 3-STATE OUTPUTS

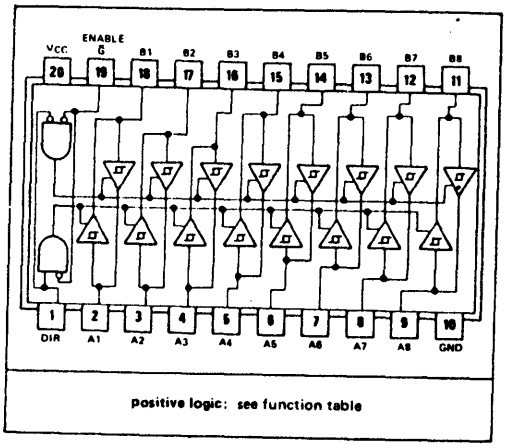

FUNCTION TABLE

ENABLE G̅	DIRECTION CONTROL DIR	OPERATION
L	L	B data to A bus
L	H	A data to B bus
H	X	Isolation

H = high level, L = low level, X = irrelevant

FAIRCHILD 93L422	AMPEX 589-482	256 X 4-BIT FULLY DECODED RANDOM ACCESS MEMORY

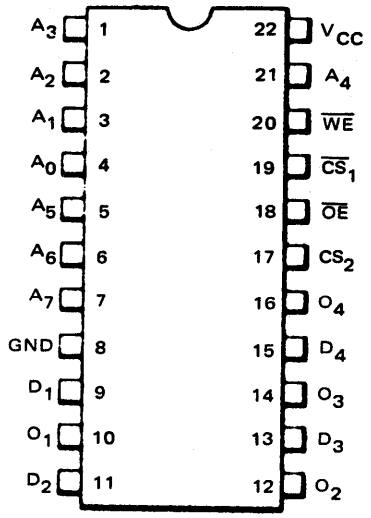

PIN NAMES

$A_0 - A_7$	Address Inputs
$D_1 - D_4$	Data Inputs
$\overline{CS}_1$, CS_2	Chip Select Inputs
$\overline{WE}$	Write Enable Input
$O_1 - O_4$	Data Outputs
$\overline{OE}$	Output Enable

TEXAS INSTRUMENTS SN74240	AMPEX 589-490	OCTAL BUFFER/LINE DRIVER/ LINE RECEIVER

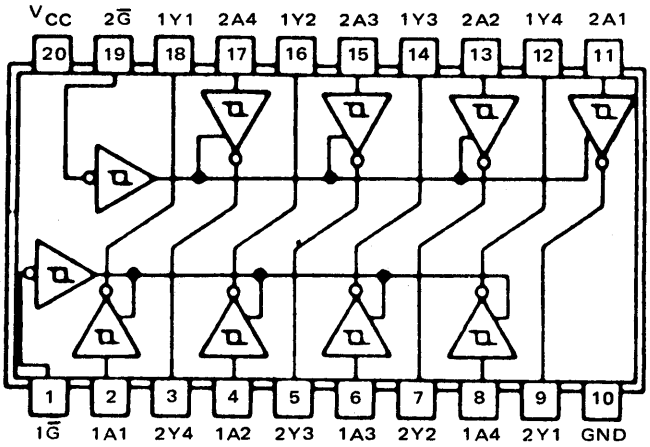

MOTOROLA **MC10109**	**AMPEX** **589-504**	**DUAL 4-5 INPUT** **OR/NOR GATE**

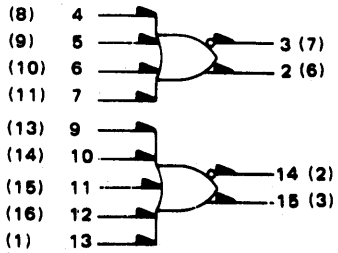

t_{pd} = 2.0 ns typ
P_D = 30 mW typ/gate (No Load)
t^+, t^- = 2.0 ns typ (20% to 80%)

V_{CC1} = Pin 1 (5)
V_{CC2} = Pin 16 (4)
V_{EE} = Pin 8 (12)

MOTOROLA MC10135 — AMPEX 589-508 — DUAL J-K MASTER-SLAVE FLIP-FLOP

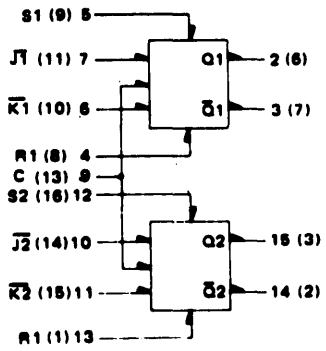

P_D = 280 mW typ/pkg (No Load)
f_{Tog} = 140 MHz typ
t_{pd} = 3.0 ns typ
t+, t− = 2.5 ns typ (20% to 80%)

CLOCK J-K TRUTH TABLE*

J	K	Q_{n+1}
L	L	$\bar{Q}_n$
H	L	L
L	H	H
H	H	Q_n

*Output states change on positive transition of clock for J K input condition present

R-S TRUTH TABLE

R	S	Q_{n+1}
L	L	Q_n
L	H	H
H	L	L
H	H	N.D.

N.D. = Not Defined

V_{CC1} = Pin 1 (5)
V_{CC2} = Pin 16 (4)
V_{EE} = Pin 8 (12)

TEXAS INSTRUMENTS SN74S374J — AMPEX 589-536 — OCTAL D-TYPE TRANSPARENT LATCH AND EDGE-TRIGGERED FLIP-FLOP

'LS374, 'S374
FUNCTION TABLE

OUTPUT CONTROL	CLOCK	D	OUTPUT
L	↑	H	H
L	↑	L	L
L	L	X	Q_0
H	X	X	Z

See explanation of function tables on page 3 8.

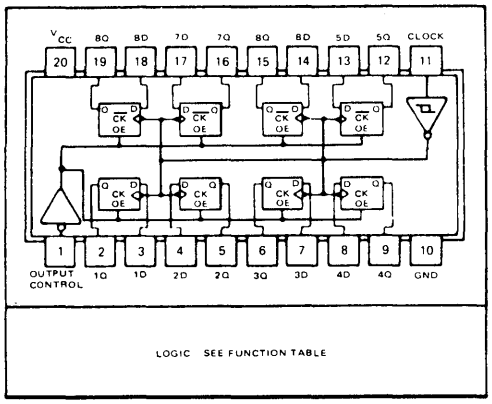

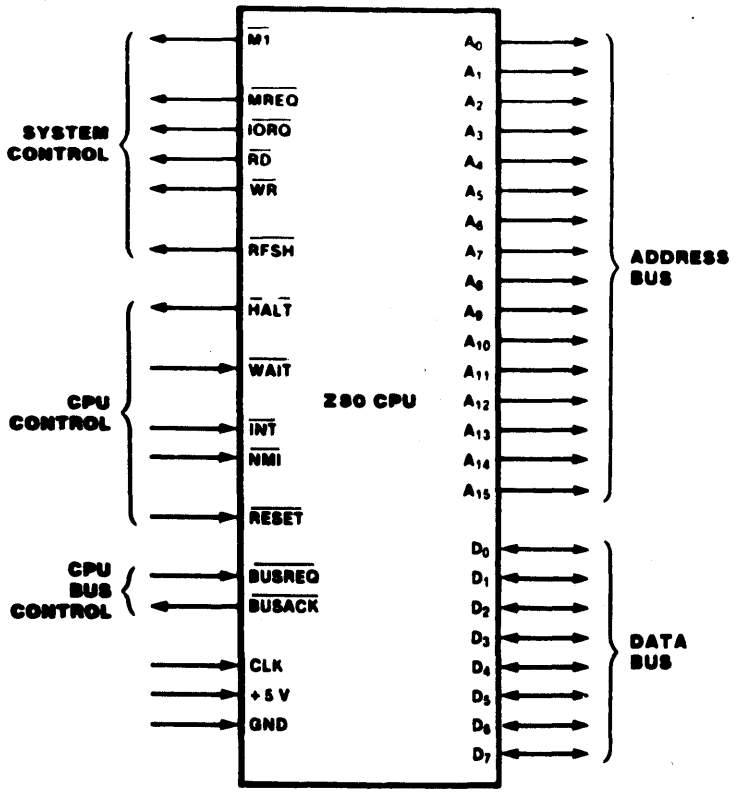
SYSTEM CONTROL
M1
MREQ
IORQ
RD
WR
RFSH
CPU CONTROL
HALT
WAIT
INT
NMI
RESET
CPU BUS CONTROL
BUSREQ
BUSACK
CLK
+5 V
GND
Z80 CPU
A0
A1
A2
A3
A4
A5
A6
A7
A8
A9
A10
A11
A12
A13
A14
A15
ADDRESS BUS
D0
D1
D2
D3
D4
D5
D6
D7
DATA BUS

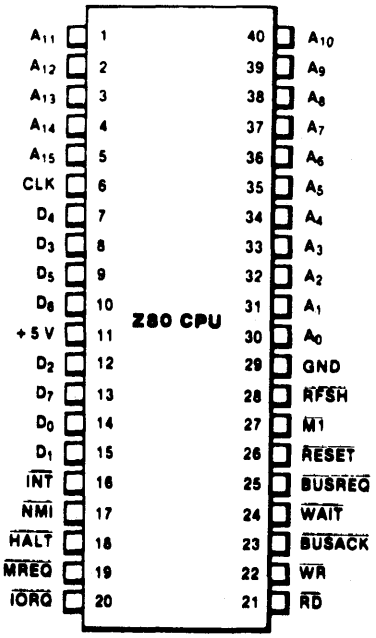
Z80 CPU
A11 1
A12 2
A13 3
A14 4
A15 5
CLK 6
D4 7
D3 8
D5 9
D6 10
+5 V 11
D2 12
D7 13
D0 14
D1 15
INT 16
NMI 17
HALT 18
MREQ 19
IORQ 20
40 A10
39 A9
38 A8
37 A7
36 A6
35 A5
34 A4
33 A3
32 A2
31 A1
30 A0
29 GND
28 RFSH
27 M1
26 RESET
25 BUSREQ
24 WAIT
23 BUSACK
22 WR
21 RD

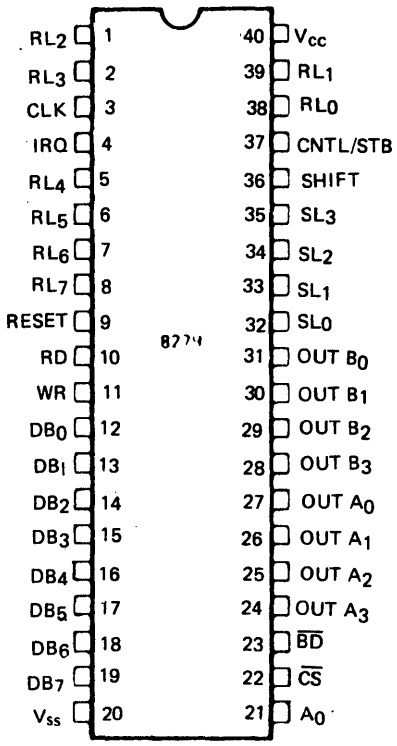

DB_0/	1.0	DATA BUS (BI DIRECTIONAL)
CLK	1	CLOCK INPUT
RESET	1	RESET INPUT
$\overline{CS}$	1	CHIP SELECT
$\overline{RO}$	1	BEAD INPUT
$\overline{WA}$	1	WRITE INPUT
A_0	1	BUFFER ADDRESS
IRO	0	INTERRUPT REQUEST OUTPUT
SL_{03}	0	SCAN LINES
RL_{07}	1	RETURN LINES
SHIFT	1	SHIFT INPUT
CNTL STB	1	CONTROL STROBE INPUT
OUT A_{01}	0	DISPLAY (A) OUTPUTS
OUT B_{03}	0	DISPLAY (B) OUTPUTS
$\overline{BD}$	0	BLANK DISPLAY OUTPUT

TRW TDS 5233	AMPEX 589-685	MONOLITHIC VIDEO A/D CONVERTER 8 BIT, 30 MSPS

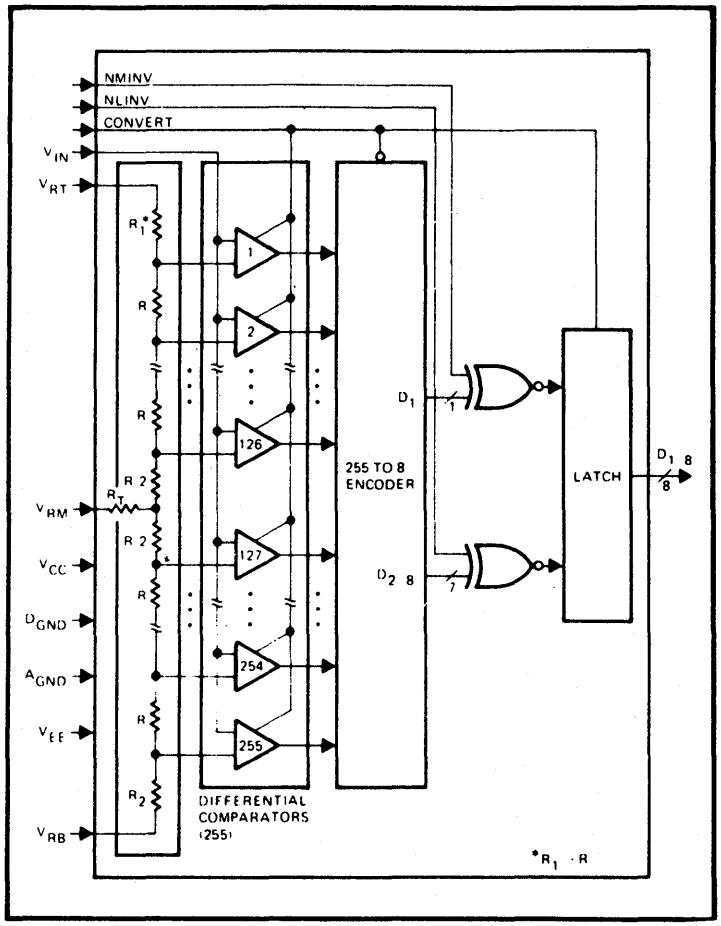

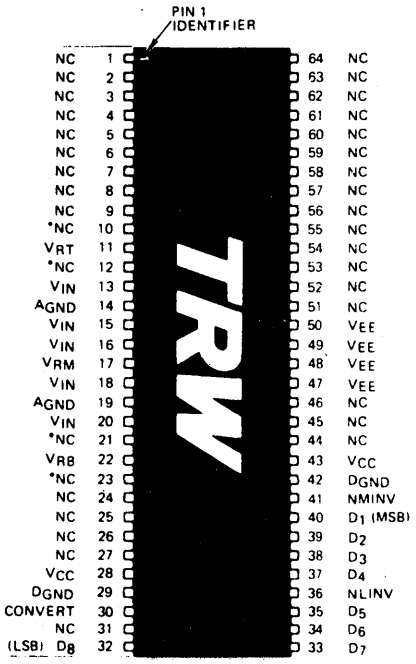

*RECOMMENDED CONNECTION TO ANALOG GROUND FOR INTERELECTRODE SHIELDING

TEXAS INSTRUMENTS SN74LS373	AMPEX 589-752	OCTAL D-TYPE TRANSPARENT LATCH AND EDGE-TRIGGERED FLIP-FLOP

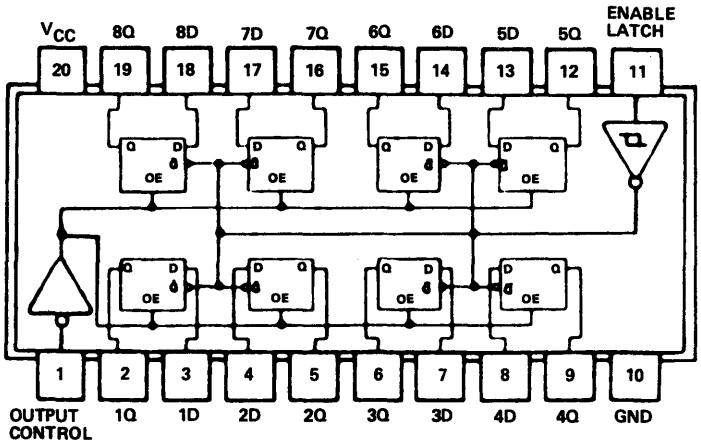

FUNCTION TABLE

OUTPUT ENABLE	ENABLE LATCH	D	OUTPUT
L	H	H	H
L	H	L	L
L	L	X	Q_0
H	X	X	Z

MOTOROLA MC10231	AMPEX 589-920	HIGH-SPEED DUAL TYPE D MASTER-SLAVE FLIP-FLOP

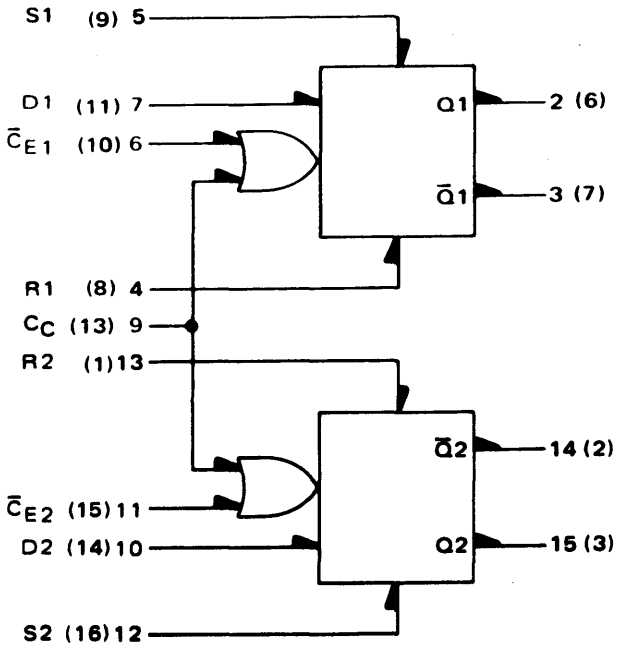

R-S TRUTH TABLE

R	S	Q_{n+1}
L	L	Q_n
L	H	H
H	L	L
H	H	N.D.

N.D. = Not Defined

MOTOROLA MCM10152	AMPEX 590-049	RANDOM ACCESS MEMORY

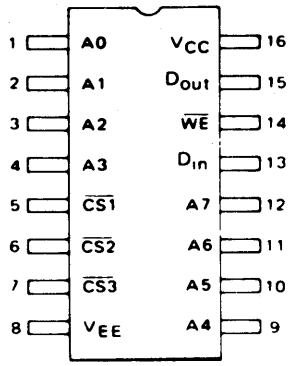

TRUTH TABLE

MODE	INPUT			OUTPUT
	$\overline{CS}$*	$\overline{WE}$	D_{in}	D_{out}
Write "0"	L	L	L	L
Write "1"	L	L	H	L
Read	L	H	ϕ	Q
Disabled	H	ϕ	ϕ	L

*$\overline{CS} = \overline{CS1} + \overline{CS2} + \overline{CS3}$ ϕ = Don't Care

STANDARD MICROSYSTEMS CORP. CRT 5037	AMPEX 590-057	VIDEO TIMER AND CONTROLLER

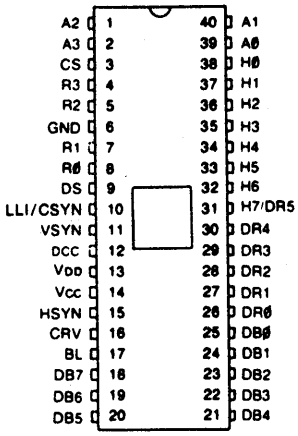

MOSTEK MK4116N	AMPEX 590-183	16K DYNAMIC RANDOM ACCESS MEMORY

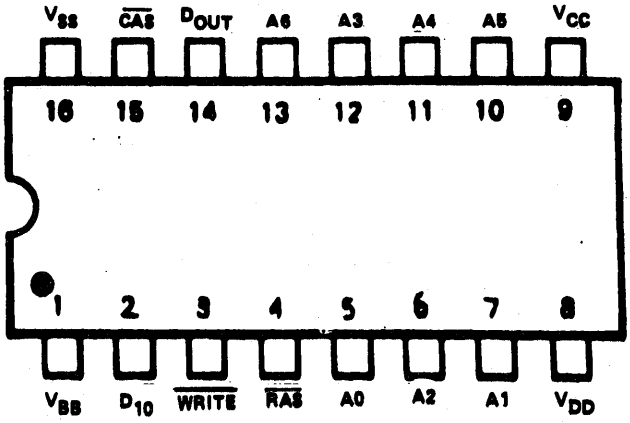

FAIRCHILD 9637	AMPEX 590-193	DUAL DIFFERENTIAL LINE RECEIVER

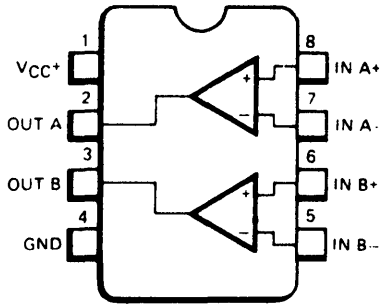

FAIRCHILD DS3692	AMPEX 590-194	DIFFERENTIAL LINE DRIVER

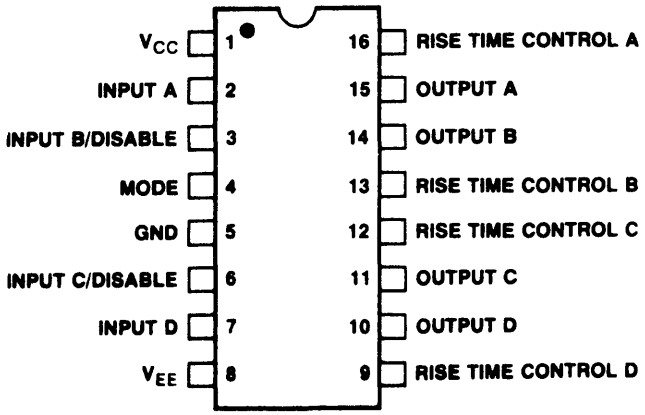

ADVANCE MIRCO DEVICES AM25S09	AMPEX 590-227	QUAD TWO-INPUT HIGH-SPEED REGISTER

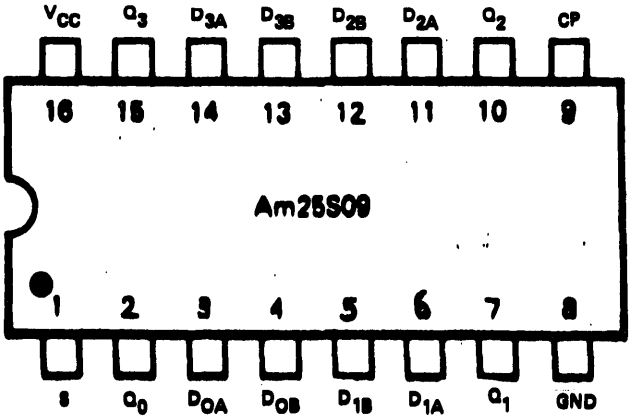

ZILOG AmZ8166	AMPEX 590-251	OCTAL DYNAMIC MEMORY DRIVER

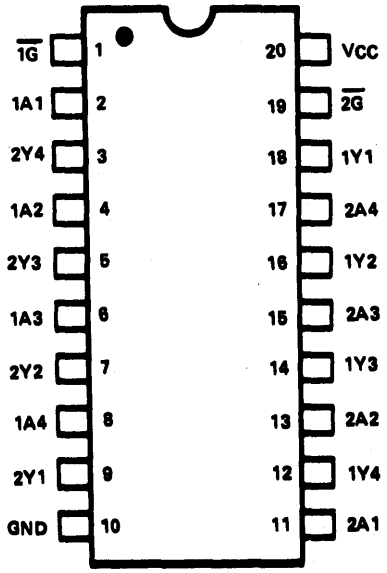

MOTOROLA MC10216	AMPEX 590-252	HIGH SPEED TRIPLE LINE RECEIVER

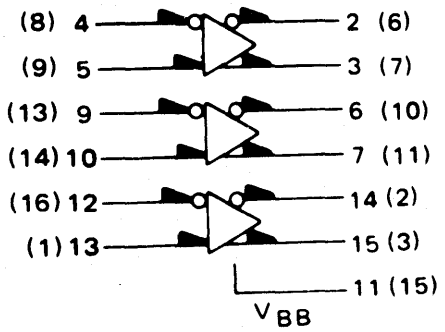

V_{CC1} = Pin 1 (5)
V_{CC2} = Pin 16 (4)
V_{EE} = Pin 8 (12)

MOTOROLA MC75463	AMPEX 590-322	DUAL HIGH-VOLTAGE PERIPHERAL DRIVERS

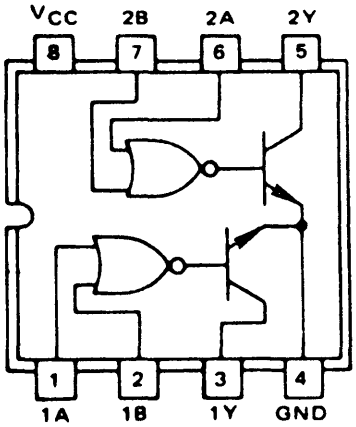

Positive Logic: Y = A + B

TRUTH TABLE

A	B	Y
L	L	L ("on" state)
L	H	H ("off" state)
H	L	H ("off" state)
H	H	H ("off" state)

H = high level, L = low level

ADVANCE MICRO DEVICES AM2966	AMPEX 590-401	OCTAL DYNAMIC MEMORY DRIVER

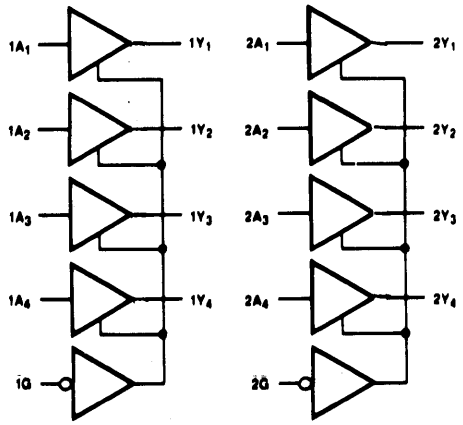

GENERAL INSTRUMENTS AY-5-1016	AMPEX 590-811	RANDOM/SEQUENTIAL ACCESS MULTIPLEXER

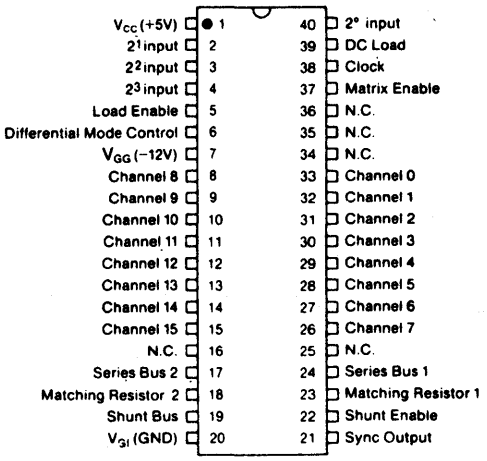

TEXAS INSTRUMENTS SN74LS182	AMPEX 590-859	CARRY LOOKAHEAD GENERATOR

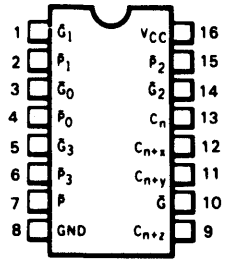

ADVANCED MICRO DEVICES AM25LS14	AMPEX 590-861	I-SPEED SERIAL/PARALLEL MULTIPLIER

V_{CC} = PIN 16

GND = PIN 8

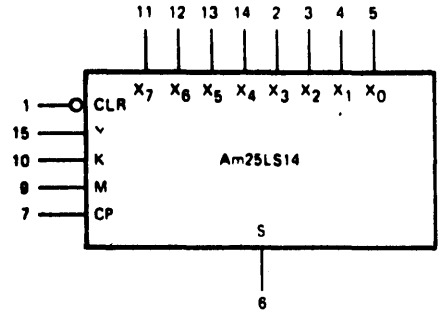

ADVANCE MICRO DEVICES AM25LS15	AMPEX 590-862	QUAD SERIAL ADDER/SUBTRACTOR

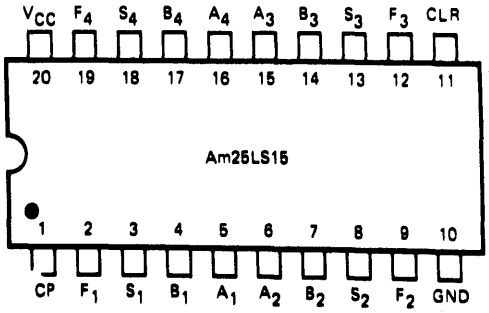

ADVANCED MICRO DEVICES AM25LS2517	AMPEX 590-863	ARITHMETIC LOGIC UNIT/FUNCTION GENERATOR

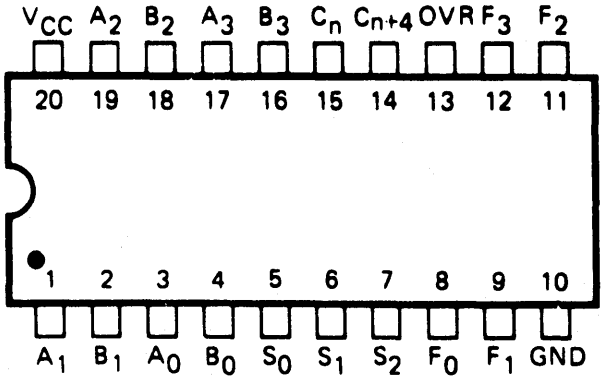

ADVANCE MICRO DEVICES AM25LS22	AMPEX 590-864	8-BIT/PARALLEL REGISTER w/SIGN EXTEND

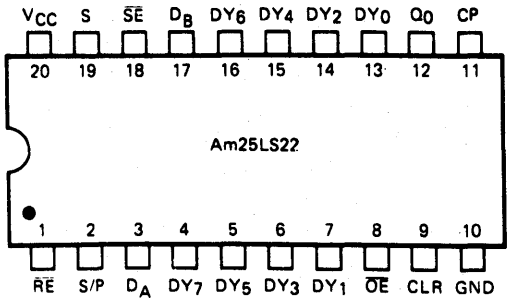

ADVANCED MICRO DEVICES AM25LS23	AMPEX 590-865	8-BIT SHIFT/REGISTER w/SYNCHRONOUS CLEAR

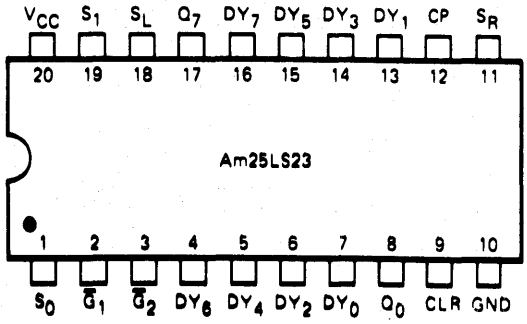

ADVANCED MICRO DEVICES AMZ8002	AMPEX 590-866	16-BIT MICROPROCESSOR

LOGIC SYMBOL

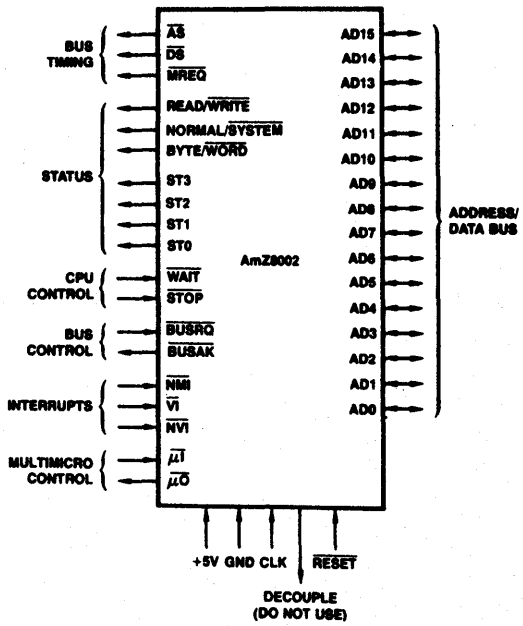

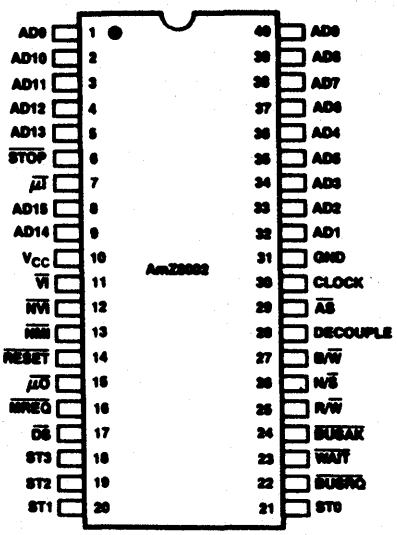

ADVANCED MICRO DEVICES AM9551 — AMPEX 590-867 — PROGRAMMABLE COMMUNICATION INTERFACE

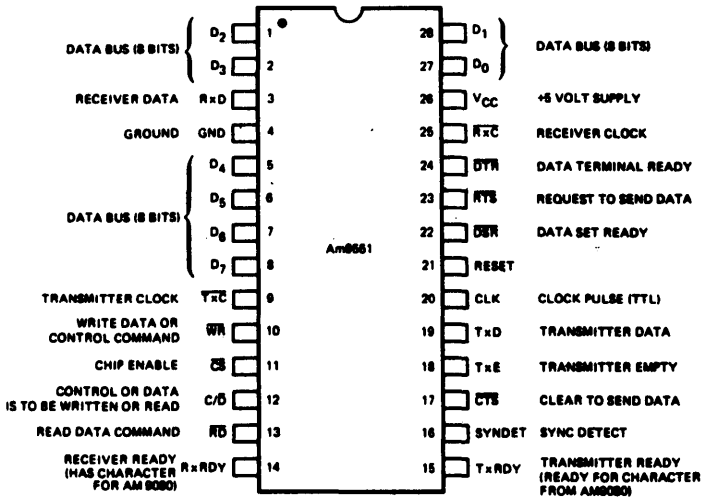

ADVANCED MICRO DEVICES AM25LS2521 — AMPEX 590-931 — EIGHT-BIT EQUAL-TO COMPARATOR

LOGIC DIAGRAM

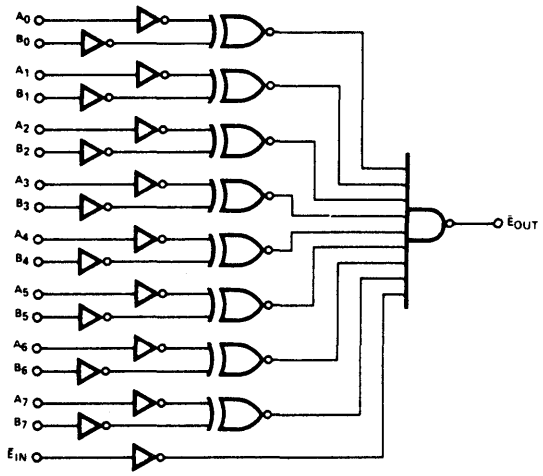

LOGIC SYMBOL

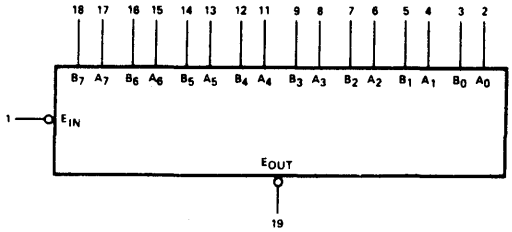

V_{CC} = Pin 20
GND = Pin 10

CONNECTION DIAGRAM

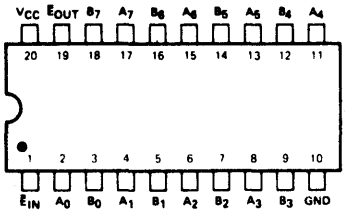

Note: Pin 1 is marked for orientation

RCA CDP1854	AMPEX 590-932	UNIVERSAL ASYNCHRONOUS RECEIVER/TRANSMITTER

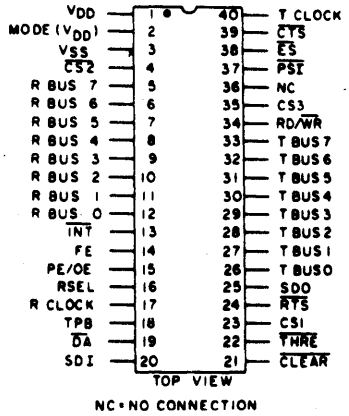

MOTOROLA MC68B50	AMPEX 590-960	ASYNCHRONOUS COMMUNICATION INTERFACE ADAPTER

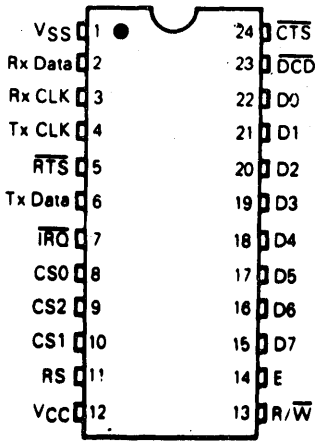

MOTOROLA MC10186	AMPEX 590-982	HEX D MASTER-SLAVE FLIP-FLOP w/RESET

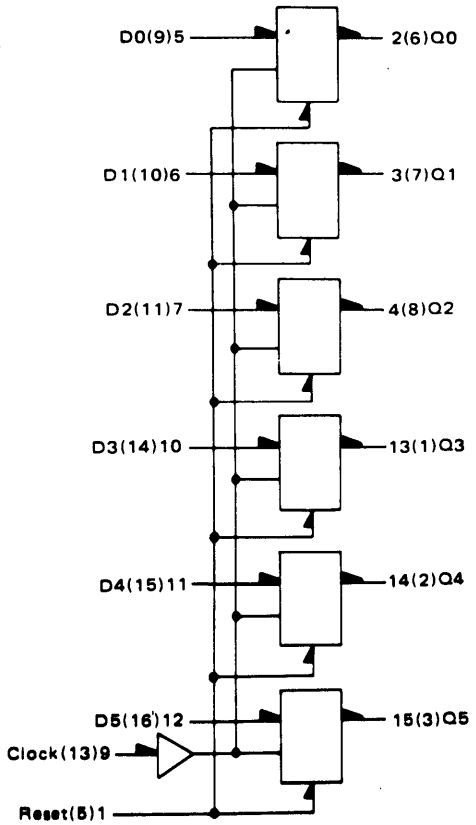

CLOCKED TRUTH TABLE

R	C	Q	Qn+1
L	L	ϕ	Qn
L	H *	L	L
L	H *	H	H
H	L	ϕ	L

ϕ Don't Care

*A clock H is a clock transition from a low to a high state.

V_{CC} = Pin 16 (4)
V_{EE} = Pin 8 (12)
P_D = 460 mW typ/pkg (No Load)
t_{pd} = 3.5 ns typ
f_{Tog} = 150 MHz typ

TOSHIBA TMM2016	AMPEX 590-983	2048 WORD x 8-BIT STATIC RAM

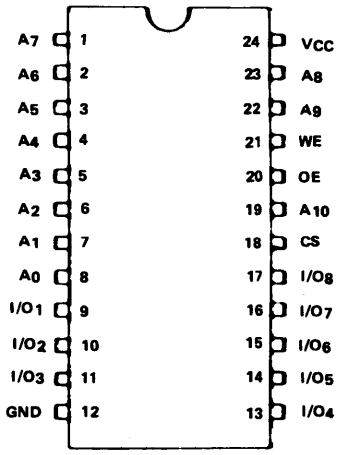

TRW MPY8HJ	AMPEX 590-987	LSI MULTIPLIER

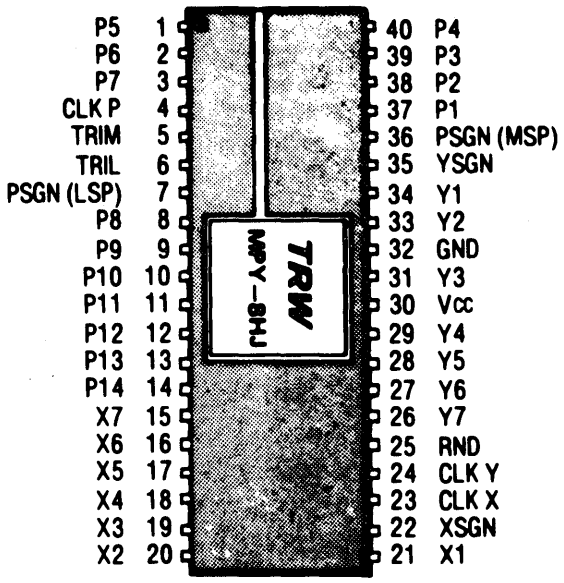

MOSTEK MK4164	AMPEX 590-989	64K DYNAMIC RAM

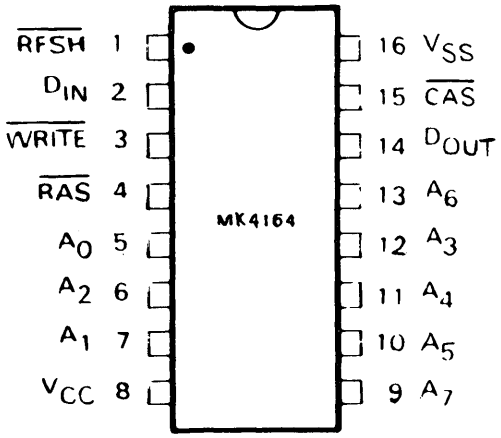

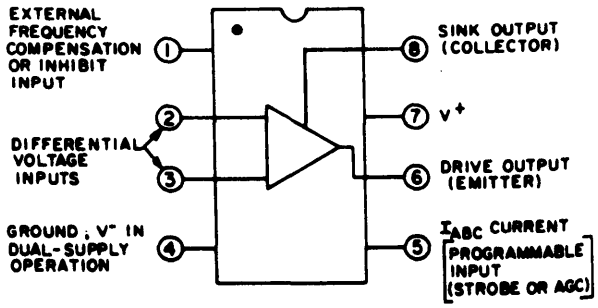
EXTERNAL FREQUENCY COMPENSATION OR INHIBIT INPUT
1
DIFFERENTIAL VOLTAGE INPUTS
2
3
GROUND ; V⁻ IN DUAL-SUPPLY OPERATION
4
8
SINK OUTPUT (COLLECTOR)
7
V+
6
DRIVE OUTPUT (EMITTER)
5
IABC CURRENT
PROGRAMMABLE INPUT (STROBE OR AGC)

APPENDIX B

BOSCHERT POWER SUPPLY

PARTS LISTS AND SCHEMATIC

TABLE OF CONTENTS

TITLE/MODEL NO.	DRAWING NO.	REV.	PAGE NO.
Power Supply OL130-3022R/4022R	45-10451-0/02 Ampex No. 570-582 Ref. LM 1465093	T	B-1
Schematic	90-10542	H	B-11

ITEM	PART NO.	QTY -1	QTY -2	DESCRIPTION	QTY ISSUED	REF DES
1	51-9183	1	1	BOARD, P.C.		
2						
3	50-9186	1	1	BRACKET, HEATSINK		
4	50-9173	1	1	BRACKET, "L"		
5						
6	43-80003-02	1	1	ASSY, NEG PES CONT		
7	43-10546	1	1	TRANSFORMER		T1
8	80-8139	1	1	TRANSFORMER,		T2
9	80-8120	1	1	TRANSFORMER		T3
10	80-8001	1	1	INDUCTOR, 100 µh Ø AMP		L1
11	80-8140	1	1	, 7 MH		L2
12	80-8034	3	3	, LOW CURR		L3, 6, 4
13						
14	80 10795	1	1	INDUCTOR, 1.6µH		L5
15						
16						
17	22-2000	2	2	CAP, CERM, .0047µf, 1000V		C10, 12
18	22-2002	4	4	, , .005µf, 1400V		C1-4
19	23-10181-01	2	2	, .01µf, 50V		C13, 36
20	22-2059	4	4	, .01µf, 100V		C46, 47, 50, 51
21	22-2005	1	1	, .01µf, 1000V		C28
22	22-2008	10	10	, CERM, .1µf, 100V		C7, 11, 20-22, 29, 32-34, 38
23						
24						
25						
26						
27	23-10186-07	2	2	CAP, M.F., .1µf, ±10%, 400V		C15, 35

TITLE: POWER SUPPLY, MODEL: OL130-3022R/4022R

DRAWING NO. 45-10451-0/02 T

Size A Sheet 1

ITEM	PART NO.	QTY -1	QTY -2	DESCRIPTION	QTY ISSUED	REF DES
28	22-2006	1	1	CAP, CERM, 150pf, 1000V		C14
29	22-2060	2	2	, CERM, 470pf, 1000V		C9,8
30	22-2032	2	2	CERM, .001µf, 1000V		C48,49
31	21-2069	2	2	, TANT, 2.2µf, 35V		C16, 18,
32	20-11659-02	1	1	AL, ELECT, 3.3µf, 250V		C37
33	20-2089	4	4	AL, , 100 µf, 200V		C5, 6, 43, 44
34						
35	20-2046	3	3	AL, , 1000µf, 35V		C23, 30, 25
36	20-2047	1	1	AL, ELECT, 2200µf, 10V		C27
37	20-2064	1	1	AL, ELECT, 2200µf 35V		C42
38	23-2115	2	2	CAP, MET FILM 1µf, 250V		C17, 19
39						
40	10-1043	2	2	RECT, SILICON, , MR504		CR 1, 3
41	10-1046	1	1	DIODE, RECT, PWR MR824		CR6
42	10-1049	2	2	DIODE, RECT, MR850, 50V, 3A		CR 26, 27
43	10-1022	2	2	DIODE, RECT, FAST RECV MR820		CR20, 21
44	10-1038	3	3	RECT., GEN PURP, IN4004 1A 400V		CR ,10, 12, 19
45	10-1013	7	7	DIODE, SILICON IN4148		CR5, 7, 9, 14-17
46	10-10383-01	1	1	RECT, , STD, MR504 (VERT PREP)		CR 4
47	10-10383-02	1	1	RECT, STD MR504 (VERT PREP)		CR 2
48	10-1078	2	2	DIODE, SCHOTTKY, 25 AMPS 30V		CR 24, 25
49	10-1088	2	2	DIODE, RECT, MR851 100V 3A		CR 22, 23
50	10-1014	1	1	DIODE, ZENER, IN5994B		CR18
51	11-1008	1	1	DIODE, ZENER, 15V		CR8
52						
53	16-1029	1	1	RECT. SILICON CONTROLLED 8A 50V		SCR 1
54						

TITLE
POWER SUPPLY
MODEL: OL130-3022R/4022R

DRAWING NO. 45-10451-01/02 REV T

SIZE A SCALE NONE SHEET 2

BISHOP GRAPHICS/ACCUPRESS

ITEM	PART NO.	QTY -1	QTY -2	DESCRIPTION	QTY ISSUED	REF DES
55	14-1000	1	1	I.C., REG, 723		A1
56	89-12960	1	1	OPTO PLUS RES MATCHED B-F		A3 + R34 [5]
57	14-1071	1	1	I.C., SHUNT REG, TL430		A2
58						
59						
60	13-1118	1	1	TRANS, NPN, SILICON PWR TRANS MJE13007 80W		Q1
61	13-1005	1	1	, NPN, POWER TIP-50		Q2
62	13-10211	2	2	, NPN, PWR, MJE13006, MATCHED		Q10, 11 [4]
63	12-1016	1	1	, PNP, AMPLIFIER, 2N4126		Q6
64	12-1154	1	1	, PNP, 400V, ST1076		Q3
65	13-1023	2	2	, NPN, GEN PURP, 2N3439		Q5, 7
66						
67	13-1017	3	3	TRANS, NPN, SILICON, MPS-5172		Q4, 8, 9
68	83-10180-01	1	1	FUSE, GLASS-TUBE, 5 AMP, 250V		F1
69	83-7015	2	2	FUSE CLIPS		XF1
70	30-3074	1	1	RES, C.F. 1.2K, ±5%, 1/4W		R26
71	30-3024	2	2	RES, C.F., 10, ±5%, 1/4 W		R6, 42
72	30-3040	1	1	, , 47, ,		R41
73	30-3019	1	1	, , 6.2, ,		R24
74	30-3080	1	1	, , 2.2K, ,		R49
75	30-3053	1	1	, , 160, ,		R22
76	-			, , , ,		
77	30-3064	1	1	, , 470, ,		R35
78						
79	30-3072	5	5	, , 1K, ,		R9, 20, 21,
80						32, 33
81	30-3088	1	1	RES, C.F., 4.7K, ±5% 1/4 W		R19

TITLE
POWER SUPPLY
MODEL: OL130-3022R/4022R

DRAWING NO 45-10451-01/02 REV T

SIZE A SCALE NONE SHEET 3

BISHOP GRAPHICS ACCUPRESS

ITEM	PART NO.	QTY -1	QTY -2	DESCRIPTION	QTY ISSUED	REF DES
82	30-3096	2	2	RES, C.F., 10K, ±5%, 1/4 W		R23,50
83	30-3099	1	1	, , 13K, ,		R18
84	30-3104	2	2	, , 22K, ,		R11,37
85	30-3120	1	1	100K		R39
86	30-3110	1	1	, , 39K, ,		R16
87	30-3082	1	1	, , 2.7K, ,		R47
88	30-3124	2	2	, , 150K, ,		R14,15
89	30-3134	1	1	, , 390K, ,		R17
90	30-3136	1	1	, , 470K, ,		R27
91						
92	30-3132	1	1	, 330K, , 1/4W		R28
93						
94	30-3232	1	1	, , 22, , 1/2 W		R31
95	30-3308	2	2	, , 33K, ,		R29,30
96						
97	30-3312	2	2	, , 47K, ,		R12,10
98	30-3320	2	2	, , 100K, ,		R3,4
99	30-3336	1	1	, C.F., 470K, ±5%, 1/2 W		R13
100						
101	39-3811	3	3	, WW, 10, ±10%, BW20F, 1W		R5,7,48
102	32-3440	1	1	, M.F., 47, , 1W,		R45
103	39-3812	1	1	, WW, 82, , BW20F, 1W		R8
104	39-3813	1	1	, WW, .1, , BW20F, 1W		R25
105	32-3472	1	1	, M.F., 1K, ±10%, 1W		R43
106						
107	39-3832-13	1	1	, WW, .24, ±5%, BWH, 2W		R36
108	39-3815	1	1	RES, WW, 1K, ±5%, BWH, 2W		R44

TITLE
POWER SUPPLY
MODEL: OL130-3022R/4022R

DRAWING NO. 45-10451-01/02 REV T

SIZE A SCALE NONE SHEET 4

BISHOP GRAPHICS/ACCUPRESS
REORDER NO. A 8447

ITEM	PART NO.	QTY -1	QTY -2	DESCRIPTION	QTY ISSUED	REF DES
109	39-3920	1	1	THERMISTOR DISC, 10Ω EPOXY DIPPED		RT1
110						
111	38-3902	1	1	POT HORZ ADJ 5K 200V		R38
112	53-7740	1	1	LABEL, DANGER HIGH VOLTAGE		
113	53-7881	1	1	LABEL, MODEL & SERIAL NO.		
114	53-10449	1	1	LABEL, 120 V/240V SELECTABLE		
115	53-10483	1	1	LABEL, WARNING TAG		
116	53-12459	1	1	LABEL, FUSE WARNING		
117	41-11151	4	4	STD, MTG HDW PRI, TO-220, CNDCT PEM STUD		Q1,2,10,11 (REF)
118	41-14463	1	1	STD, MTG HDW SEC, TO-220, CNDCT PEM STUD		SCR-1 (REF)
119	41-10925	2	2	STD, MTG HDW, DO-4 DIODE W/SLDR LUG		CR24,25 (REF)
120	52-10614	1	1	STIFFENER 130W		C5,6,43,44 (REF)
121	70-12065-01	3	3	SCREW, CROSS REC., 6-32 × 3/8		
122	41-10918	1	1	STD, MTG HDW P.C. BD SUPPORT GNDING		
123	41-10915	4	4	STD, MTG HDW P.C. BD SUPPORT NYLON		
124	74-7202	.001/LB	.001/LB	RTV		
125	73 11662	3	3	MOUNTING PAD		Q3,5,7
126	70-7608	1 EA	1 EA	SCREW, CROSS REC. HD. 6-32 x 1/4"		
127						
128	73-11428-01	4	4	SPACER, NYLON		L2
129						
130	74-7765	.01	LBS.	THERMAL, COMPOUND		
131						
132	71-14465-01	1	1	P.C.B. PEM NUT SS 6-32 THREAD		
133	70-12891-03	5	5	PEM STUD 4-40 THREAD		
134						
135						

TITLE
POWER SUPPLY
MODEL: OL130-3022R/4022R

DRAWING NO 45-10451-01/02 REV T

SIZE A SCALE NONE SHEET 5

BISHOP GRAPHICS/ACCUPRESS REORDER NO A-8452

ITEM	PART NO.	QTY -1	QTY -2	DESCRIPTION	REF DES
136					
137					
138					
139					
140					
141					
142					
143					
144	84-6009	1	1	TERM PIN MALE LARGE	E1
145					
146	73-7982	1	1	JUMPER, FEMALE, 6.00 LG, YEL	JP2
147					
148	76-7500	2	2	TIE WRAP, SMALL	
149					
150					
151	87-7973	3	3	WIRE 22 AWG, BARE, .20 LG	JP4,5,6
152	87-7959	2	1	WIRE, 22 AWG, BARE, .50 LG	JP1,3
153	87-7413	1	1	WIRE 22 AWG GRN, 6.50 LG, 1/4 X 1/4	
154	87-7930	2	2	WIRE, 22 AWG RED 1.50 LG, UL1007	1/4 × 1/4
155					
156	84-7036	1	1	TERMINAL BLOCK 11 POSITION	TB1
157					
158	87-10517-29	3	3	TUBING, SHRINK, .750 ID X 1.00 LG	C1,2,3 (REF)
159					
160					
161	87-10443-06	2	2	TUBING, TEFLON, .05 ID X .75 LG	CR2,4 (REF)
162					

TITLE
POWER SUPPLY
MODEL: DL130-3022R/4022R

DRAWING NO 45-10451-01/02 REV T

SIZE A SCALE N/A SHEET 6

BISHOP GRAPHICS/ACCUPRESS
REORDER NO A 8452

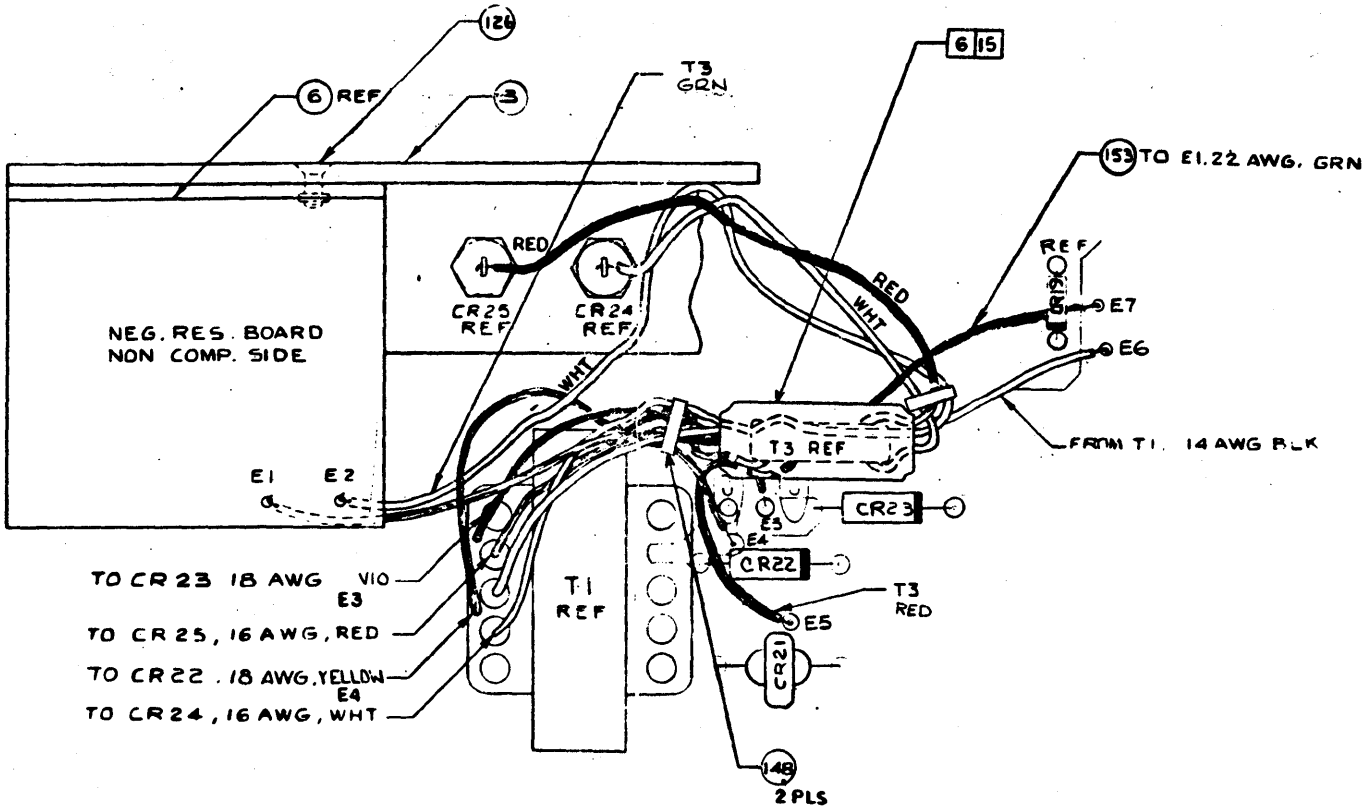

DETAIL "D"
NEGATIVE RESISTANCE & TRANSFORMER T3

WIRE CHART	
FROM	TO
T3 (GRN)	E2
T3 (RED)	E5
T1 (VIO)	E3
T1 (RED)	CR25
T1 (BLK)	E6
T1 (YEL)	E4
T1 (WHT)	CR24
E7 (GRN)	E1

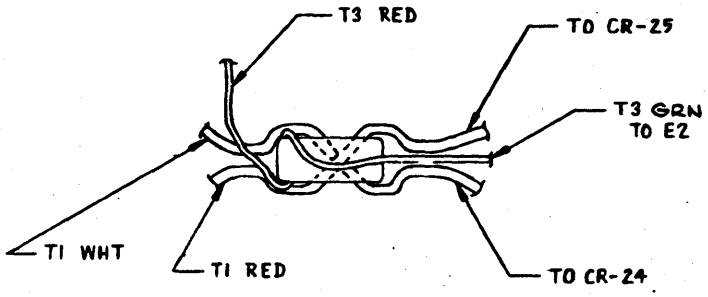

DETAIL "H"

Power Supply Assembly

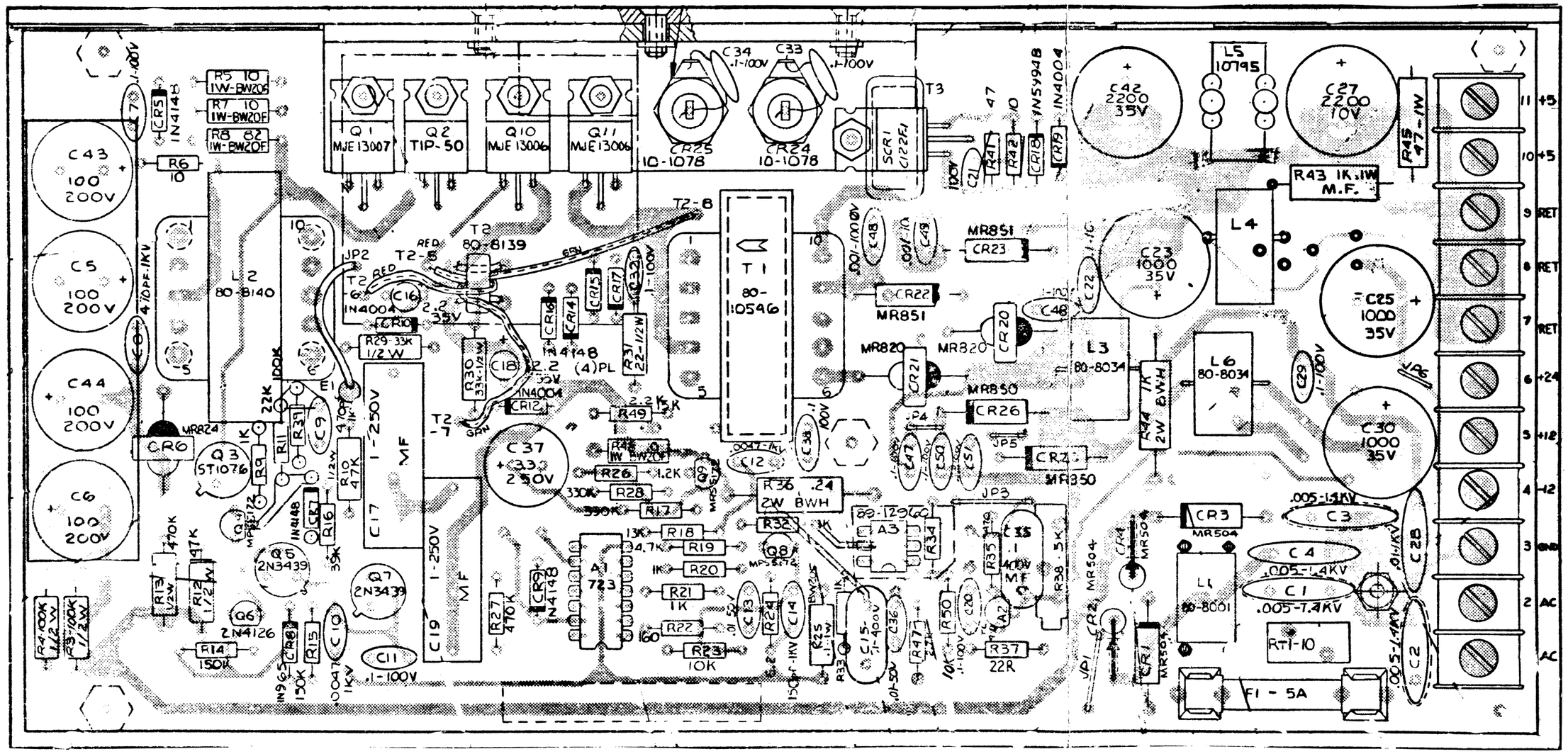

Assembly No. 570-582.

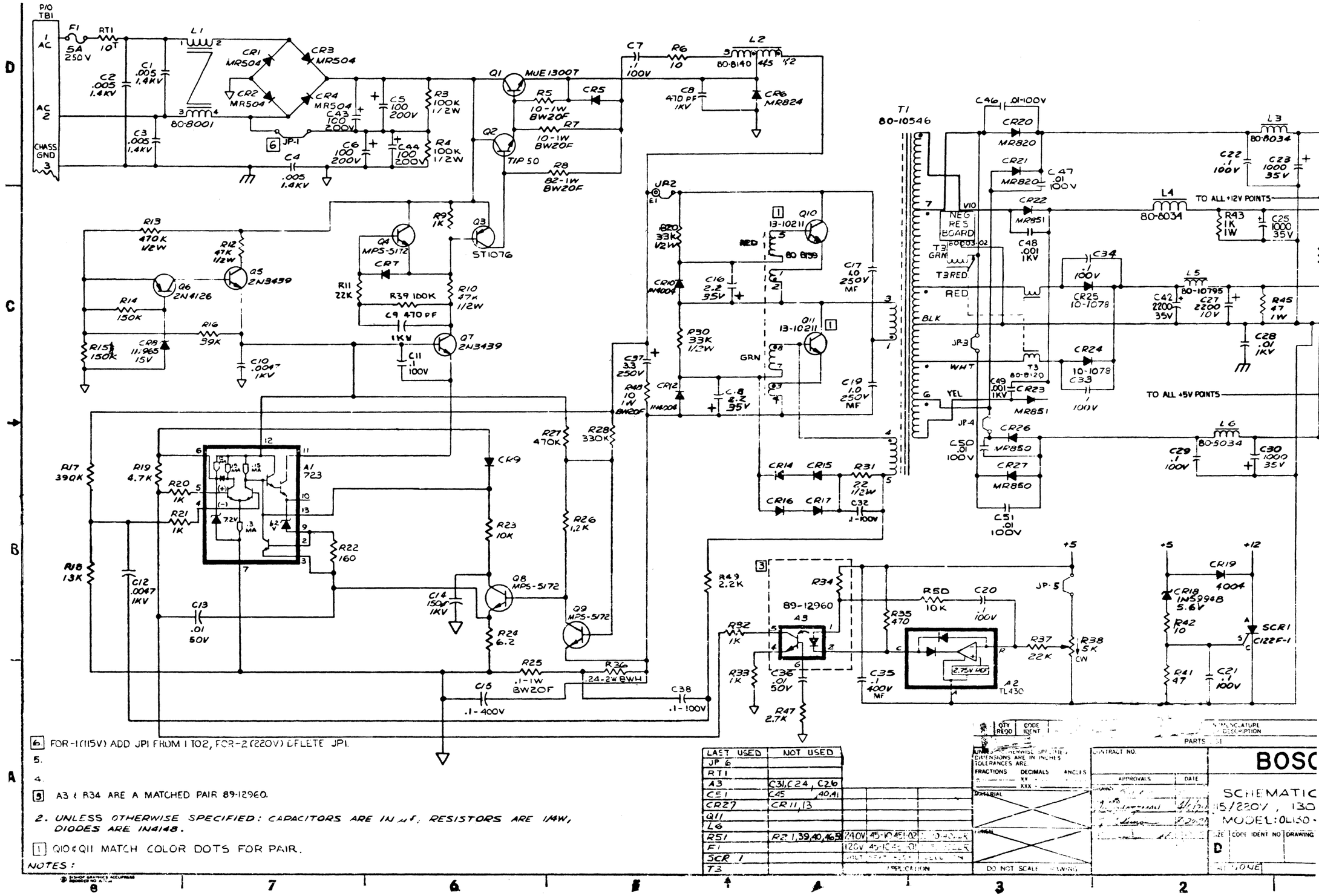

6. FOR-1(115V) ADD JP1 FROM 1 TO 2, FOR-2(220V) DELETE JP1.

5.

4.

3. A3 & R34 ARE A MATCHED PAIR 89-12960.

2. UNLESS OTHERWISE SPECIFIED: CAPACITORS ARE IN µf, RESISTORS ARE 1/4W, DIODES ARE 1N4148.

1. Q10 & Q11 MATCH COLOR DOTS FOR PAIR.

NOTES:

LAST USED	NOT USED
JP 6	
RT1	
A3	C31, C24, C26
C51	C45, 40, 41
CR27	CR11, 13
Q11	
L6	
R51	R21, 39, 40, 46, 5
F1	
SCR 1	
T3	

QTY REQD	CODE IDENT	NOMENCLATURE DESCRIPTION
		PARTS LIST

UNLESS OTHERWISE SPECIFIED DIMENSIONS ARE IN INCHES TOLERANCES ARE FRACTIONS DECIMALS ANGLES .XX .XXX

MATERIAL

FINISH

DO NOT SCALE DRAWING

CONTRACT NO.

APPROVALS DATE

DRAWN

BOSC

SCHEMATIC

115/220V, 130

MODEL: OL130-

SIZE D CODE IDENT NO DRAWING

NEXT ASSY

USED ON

APPLICATION

Ampex 1809623-04

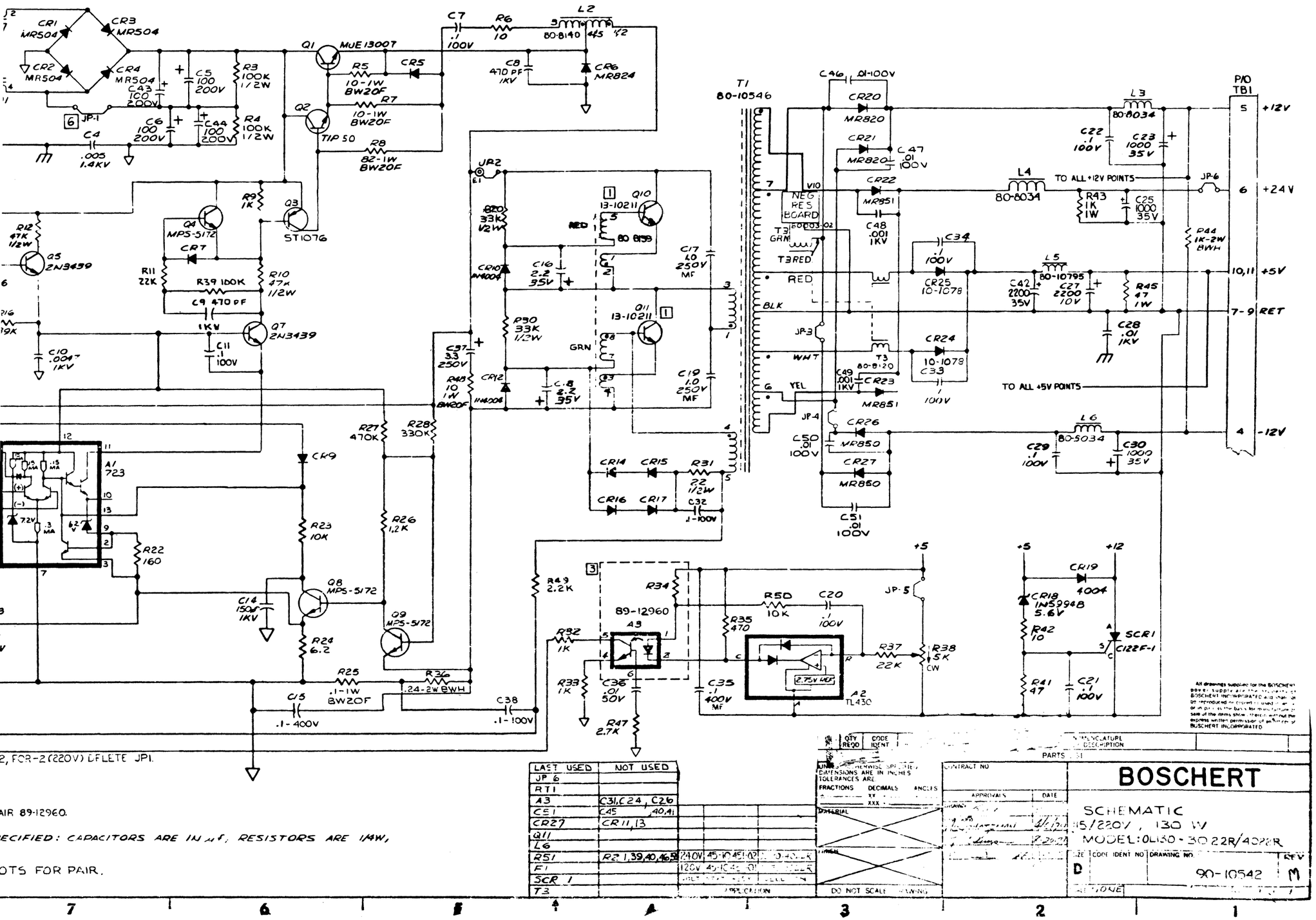

Schematic No. 570-582

APPENDIX C

C.ITOH, INC. CRT DISPLAY MONITOR

PARTS LISTS AND SCHEMATIC

TABLE OF CONTENTS

TITLE/MODEL NO.	DRAWING NO.	REV.	PAGE NO.
CRT Display Monitor C1Q-9 and C1Q-12	CIQ-09UQ10D012C31 Ampex No. 545-299 Ref. LM 1420477	1	C-1
Schematic	15VDCC1Q9/12		C-11
Schematic	12VDCC1Q9/12		C-13

SPECIFICATIONS

MODEL CIQ-9
MODEL CIQ-12

9" and 12" CRT DISPLAY MONITOR

C. ITOH ELECTRONICS, INC.
5301 Beethoven Street Los Angeles, Calif. 90066
Telephone: (213) 390-7778 Telex: (WU) 65-2451

666 Third Avenue New York, NY 10017
Telephone (212) 682-0420 Telex (WU) 12-5059

SPEC. NO. GK:4-82
Rev. 1

SPECIFICATIONS

GENERAL

The Model CIQ-12 and CIQ-9 are a 12-inch and 9 inch CRT Display Unit which is to be used as an alpha-numeric display device. The CRT will be scanned in conventional TV fashion.

All input signal connections to the monitor will be via a single 10 pin card edge connector, and comprise:

Video
Horizontal Drive
Vertical Sync

RATING

1.	Video Input	4.0Vp-p ± 1.5V positive going pulse
2.	Video Input Impedance	More than 1 KΩ
3.	Horizontal Drive	4.0Vp-p ± 1.5V positive going pulse Pulse width: 4 to 40 μsec Frequency: 15.75 KHz ± 500 Hz
4.	Horizontal Drive Input Impedance	More than 470Ω
5.	Vertical Sync	4.0Vp-p ± 1.5V negative going pulse Pulse width: 300 μsec. to 1.4 msec. Frequency: 55 Hz ± 8 Hz
6.	Vertical Sync Input Impedance	More than 1 KΩ
7.	Signal Level	Low: 0 ± 0.4V High: 4 ± 1.5V
8.	Power Supply	DC +12V ± 0.2V (Less than 1.5A) or DC +15V ± 0.2V (Less than 1.2A)* or AC 115/230V ± 10%, 50/60 Hz (Option) Input connector for AC power supply (customer supplied) Housing: AMP1-480705-0 or equivalent Contact pin: AMP 350690-1 or equivalent

*Jumper selection and parts replacement are needed.

9. Ambient Temperature	0° C to 55° C (Operating) -30° C to 65° C (Storage)
10. Humidity	10 to 90% (Non-condensing)
11. C.R.T.	12 and 9-inch, 90° deflection 20
12. X-ray Radiation	Less than 0.5mR/H
13. Weight	CIQ-12 Approx. 9.9 lbs (4.5 Kg) without AC power unit AC power unit Approx. 3.3 lbs. (1.5 Kg) CIQ-9 Approx. 6.2 lbs. (2.8 Kg)
14. Dimensions	Based on the drawing of External View.
15. Inside Controls	Sub-brightness, Focusing, Vertical Frequency, Vertical Size, Horizontal Centering, Horizontal Size, Horizontal Linearity, Vertical Linearity
16. Phosphor	P4 - Standard P31 - Option P39 - Option
17. Optimum Display Size	CIQ-12 198mm x 135mm (7.8 in. x 5.3 in.) CIQ-9 150mm x 110mm (5.9 in. x 4.3 in.)

CHARACTERISTICS

1. Video Band Width	16MHz ± 3dB
2. Rise Time and Fall Time	35 nsec or less (linear mode)
3. Storage Time	15 nsec or less (linear mode)
4. Horizontal Retrace Time	Approx. 8.5 μsec
5. Vertical Retrace Time	0.9 msec. or less
6. Resolution	CIQ-12 Center: 850 TV lines (mean) Corner: 700 TV lines (mean) CIQ-9 Center: 800 TV lines (mean) Corner: 650 TV lines (mean)

7. Distortion and Linearity Offset
Within limit equivalent to 2% measured with EAI's ball chart
(with PC board mounted according to manufacturer's specification)

8. SN Ratio	40dB or more (80% area of CRT screen)
9. MTBF	More than 20,000 H (without CRT)
10. Performance range	0°C to 40°C

1. Connection of Connector

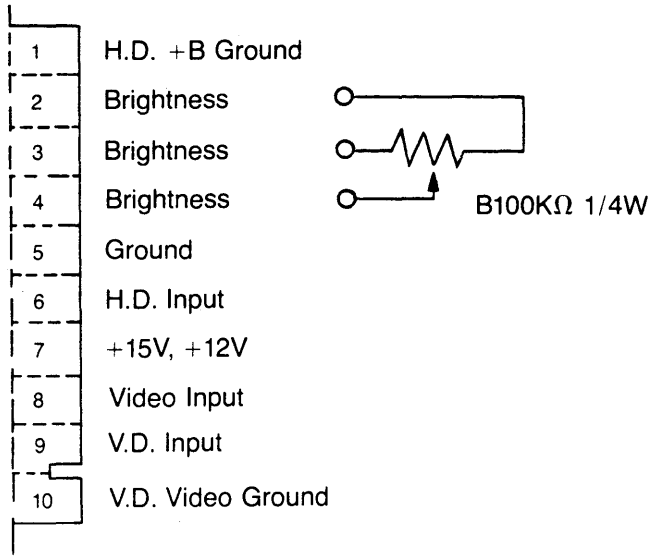

2. Input Connector

Card edge connector

- Viking # 2VK10S/1-2
- Amphenol # 225-21031-101
- Cinch # 1-039-0119
- Hirose # CR7E-20DA-3.96E
- Or Equivalent

Polarizing key shall be inserted between 9 pin and 10 pin.

3. C.P.U. Output Circuit

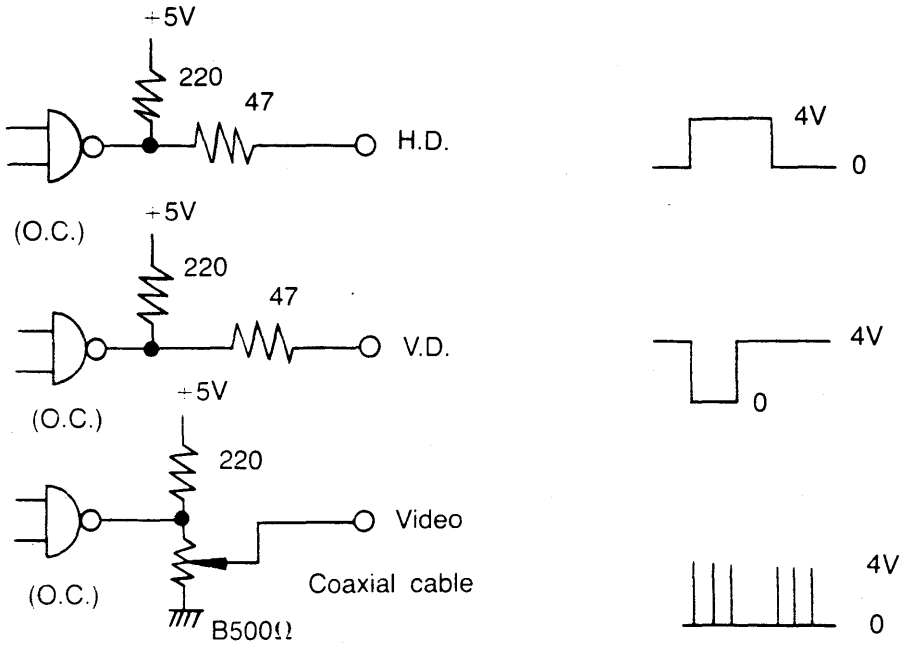

TIMING CHART (Standard Type)

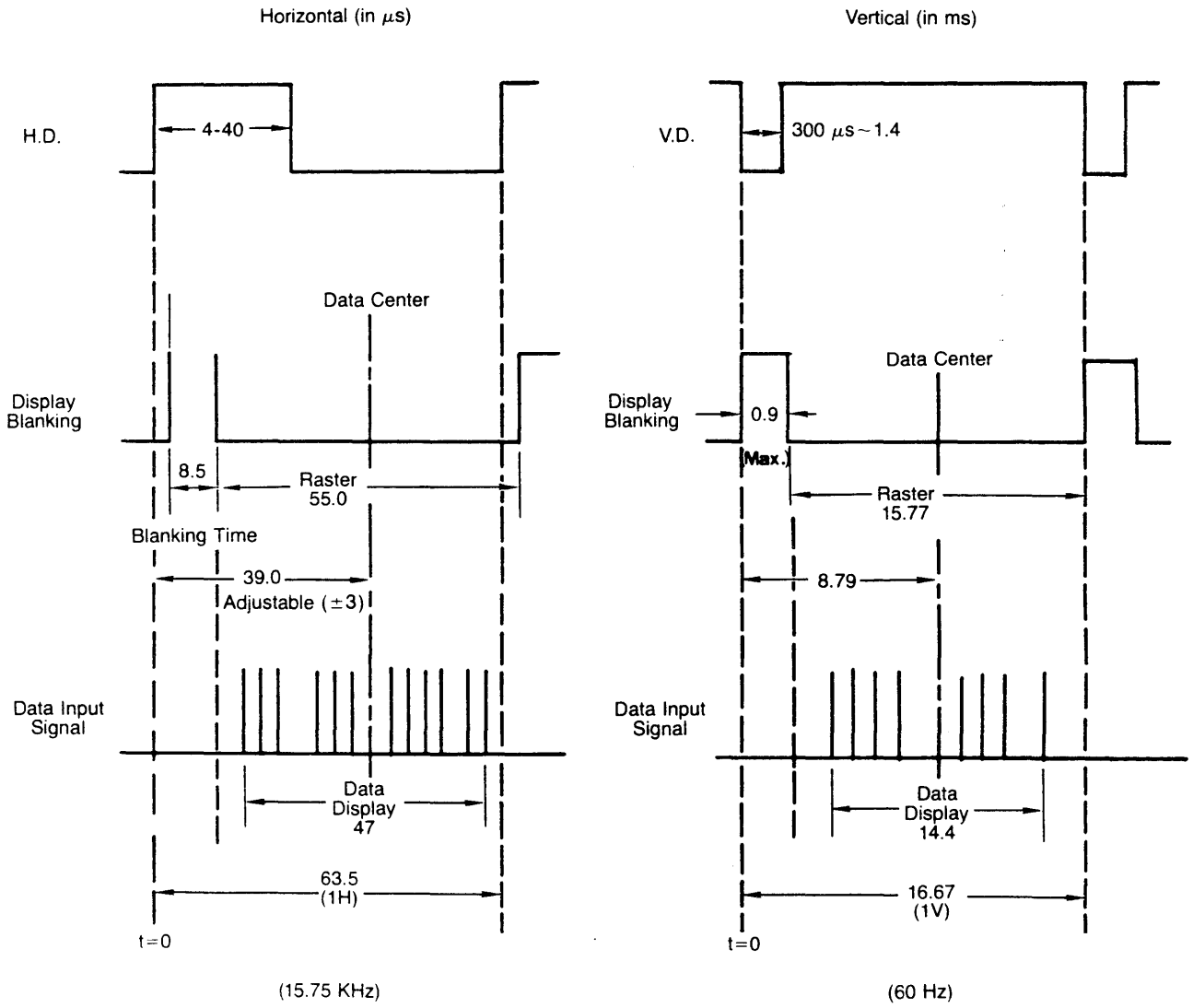

MODEL CIQ-9 (12V)

SYM	COMPONENT	RATING			Q'TY /SET
Q101	Transistor	2SC1514			1
Q102	"	2SC1815 (Y)			1
Q103	"	2SA1015 (Y)			1
Q104	"	2SD763			1
Q105	"	2SC2335			1
Q106	"	2SC1815 (Y)			1
Q107	"	2SA1015 (Y)			1
Q108	"	"			1
Q109	"	"			1
Q110	"	2SD401A			1
D101	Diode	1S2076			1
D102	"	U06E or ERD29-04J			1
D103	"	HF-1C or RH-1C			1
D104	"	HF-1 or RH-1			1
D105	"	HF-1 or RH-1			1
D106	"	HZ-11A-1			1
D107	"	ERD29-o4J			1
R101	Carbon Film Resistor	22Ω	1/4W		1
R102	"	56Ω	1/4W		1
R103	Metal Film Resistor	680Ω	3W		1
R104	Carbon Film Resistor	100KΩ	1/4W		1
R105	"	3.3KΩ	1/4W		1
R106	"	1KΩ	1/4W		1
R107	"	1.7KΩ	1/4W		1
R108	"	15KΩ	1/4W		1
R109	"	22Ω	1/4W		1
R110	"	560Ω	1/4W		1
R111	"	170Ω	1/4W		1
R112	"	100Ω	1/4W		1
R113	"	100Ω	1/4W		1
R114	Delete				
R115	Metal Film Resistor	22Ω	1W		1
R116	Carbon Film Resistor	560Ω	1/2W		1
R117	Metal Film Resistor	0.51Ω	1W	±5%	1
R118	Carbon Film Resistor	3.3KΩ	1/4W		1
R119	"	3.3KΩ	1/4W		1
R120	"	100KΩ	1/4W		1
R121	"	1KΩ	1/4W		1
R122	"	2.2KΩ	1/4W		1
R123	"	220Ω	1/4W		1
R124	"	2.2KΩ	1/4W		1

MODEL CIQ-9 (12V)

SYM	COMPONENT	RATING			Q'TY /SET
R125	"	10KΩ	1/4W		1
R126	"	1.8KΩ	1/4W		1
R127	"	1KΩ	1/4W		1
R128	"	39KΩ	1/4W		1
R129	"	33KΩ	1/4W		1
R130	"	4.7Ω	1/4W		1
R131	"	1KΩ	1/4W		1
R132	"	22KΩ	1/4W		1
R133	"	180KΩ	1/4W		1
R134	"	220KΩ	1/4W		1
R135	"	220KΩ	1/4W		1
R136	"	270KΩ	1/4W		1
R137	"	47KΩ	1/2W		1
R138	"	680KΩ	1/2W		1
R139	"	1MΩ	1/2W		1
R140	"	1MΩ	1/2W		1
R141	"	100Ω	1/2W		1
R142	"	2.2Ω	1/2W		1
R143	"	22Ω	1/2W		1
R144	"	100Ω	1/2W		1
R145	Delete				
R146	Carbon Film Resistor	1KΩ	1/2W		1
R147	"	4.7KΩ	1/2W		1
R148	Carbon Film Resistor	4.7KΩ	1/2W		1
R149	"	1KΩ	1/4W		1
C101	Ceramic Capacitor	330PF50V			1
C102	" "				
C103	Mylar Capacitor	0.0022μF	100V		1
C104	PP Capacitor	0.033μF	100V		1
C105	Mylar Capacitor	0.022μF	100V		1
C106	Ceramic Capacitor	560PF	50V		1
C107	Electrolytic Capacitor	47μF	16V		1
C108	Mylar Capacitor	0.01μF	100V		1
C109	Electrolytic Capacitor	100μF	25V		1
C110	" "	100μF	25V		1
C111	" "	100μF	25V		1
C112	BP Capacitor	18μF	50V	±10%	1
C113	PL Capacitor	0.022μF	400V	±10%	1
C114	Oil Capacitor	0.0μF	400V	±20%	1
C115	Mylar Capacitor	0.047μF	100V		1
C116	" "	0.1μF	100V		1
C117	Tantalum Capacitor	4.7μF	25V		1
C118	" "	1μF	35V		1
C119	Electrolytic Capacitor	10μF	25V		1

MODEL CIQ-9 (12V)

SYM	COMPONENT	RATING		Q'TY /SET
C120	Electrolytic Capacitor	470μF	16V	1
C121	" "	470μF	16V	1
C122	Ceramic Capacitor	470PF	50V	1
C123	Electrolytic Capacitor	47μF	25V	1
C124	Ceramic Capacitor	0.01μF	50V	1
C125	Electrolytic Capacitor	47μF	50V	1
C126	" "	22μF	160V	1
C127	Ceramic Capacitor	0.01μF	1.4KV	1
C128	" "	0.01μF	1.4KV	1
C129	Mylar Capacitor	0.01μF	100V	1
C130	Oil Capacitor	0.0047μF	400V	1
C131	Electrolytic Capacitor	220μF	35V	1
T101	Horiz. Drive Transformer	DT-268		1
T102	Flyback Transformer	DH-1183		1
L101	Horiz. Centering Coil	CAN3794Z		1
L102	Horiz. Width Coil	DL-327		1
L103	Horiz. Linearity Coil	DL-284		1
L104	Vertical Choke Coil	DL215D		1
SG101	Spark Gap	SP-10N		1
SG102	Spark Gap	SP-10N		1
P101	Pin Connector	A4-705B-00		1
VR101	Variable Resistor	B1M		1
VR102	Variable Resistor	B20K		1
VR103	Variable Resistor	B20K		1
VR104	Variable Resistor	B100K		1
VR105	Variable Resistor	B1M		1
	Heat Sink	IC-2430-ST		2
	CRT Socket	S7-502B-84 S7-502B-59 with lead wires		1

MODEL CIQ-9 (12V)

SYM	COMPONENT	RATING	Q'TY /SET
	Jumping wire for PC Board	ERD-14TO	6
	Wrapping Terminal	1 x 8 mm	2
	Wrapping Terminal Tip		2
	Cathode Ray Tube	E2728 B4	1
		B31	1
		B39	1
		B4 HT	1
		B31 HT	1
		B39 HT	1
	Deflection Yoke	DY-1140G	1
	PC Board	PB-811B	1
	Metal Chassis		1

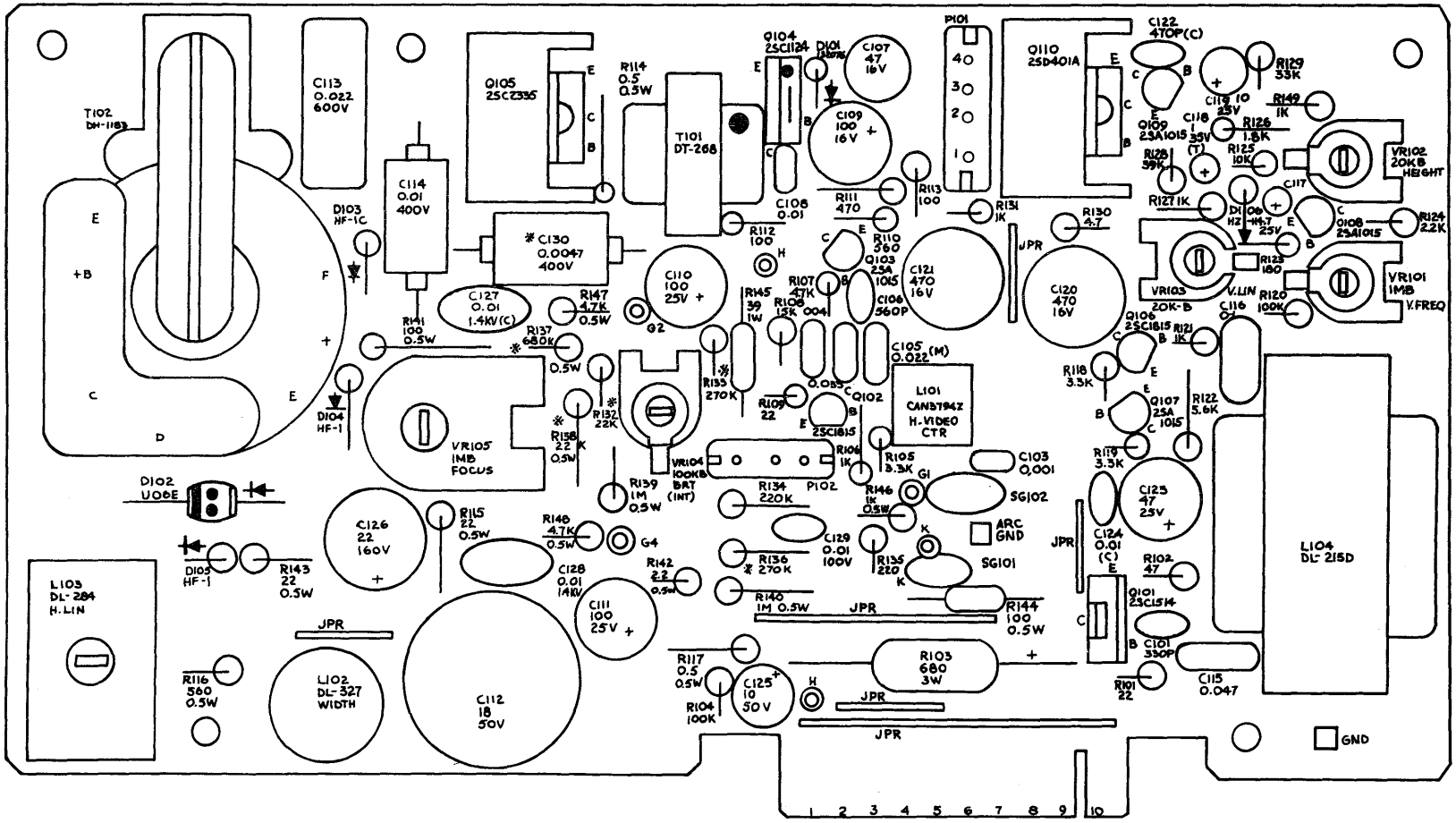

PB-811
CIQ-12 AND 9
15VDC VERSION
COMPONENTS LOCATION
(COMPONENTS SIDE)

Assembly No. 545-299

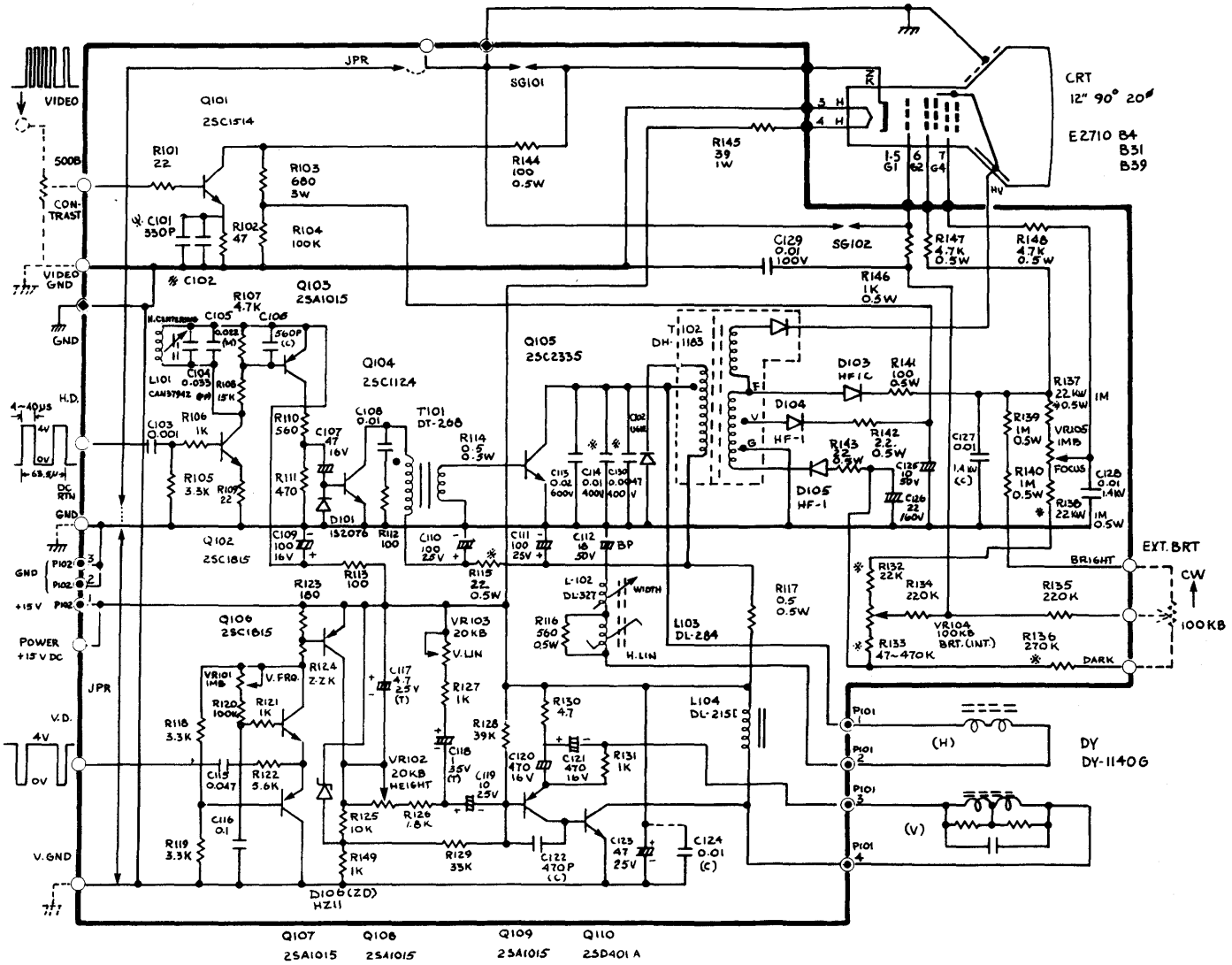

NOTES:
- ○ INTERFACE CONNECTOR
- ◉ PIN CONNECTOR
- ◈ 1 PIN
- ● DIRECT
- ✱ ADJUSTED

CIQ-12 AND 9 15VDC VERSION CIRCUIT DIAGRAM	

Schematic No. 545-299

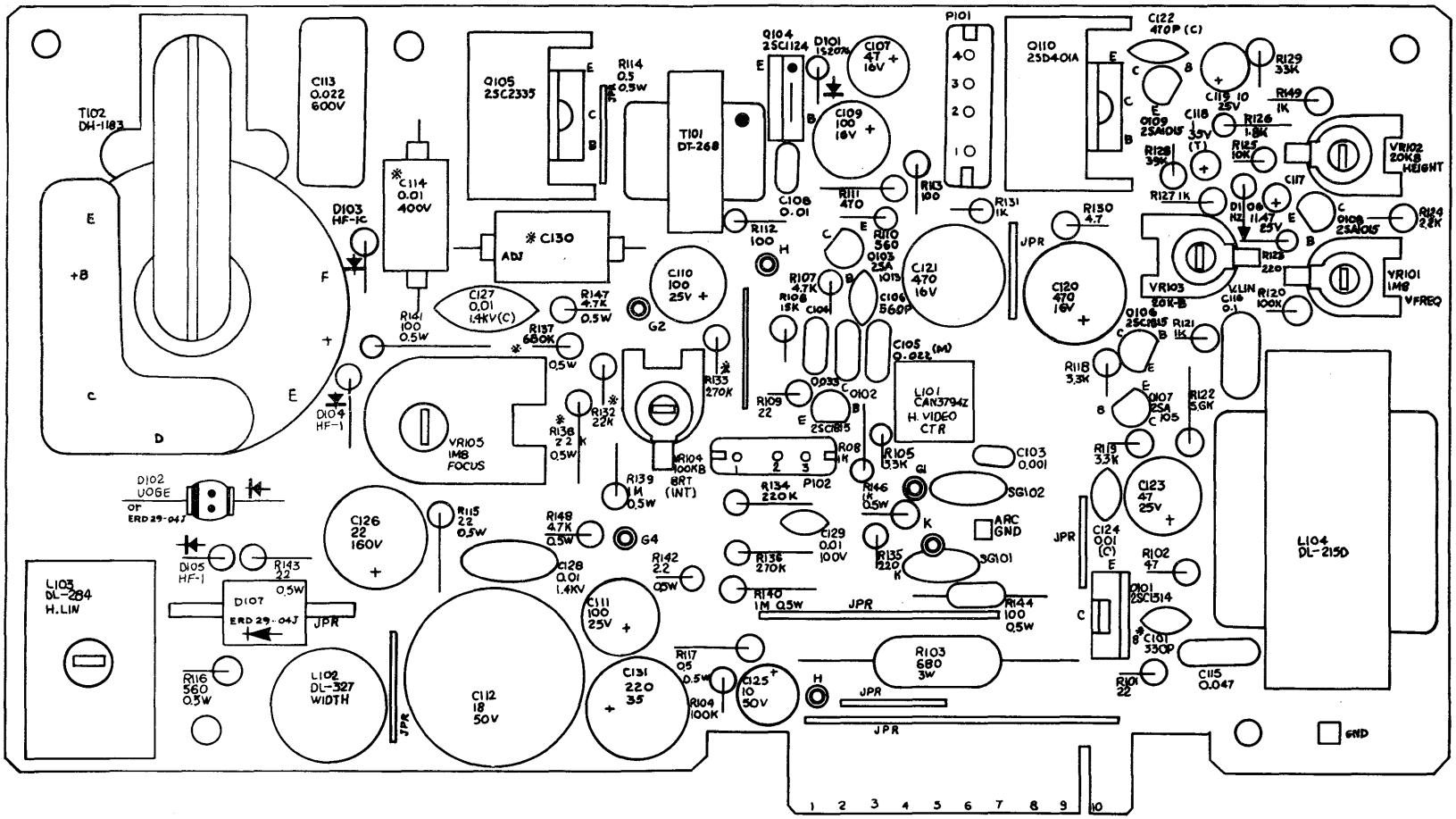

PB-811 CIQ-12 AND 9 12VDC VERSION COMPONENTS LOCATION (COMPONENTS SIDE)	

Assembly No. 542-299

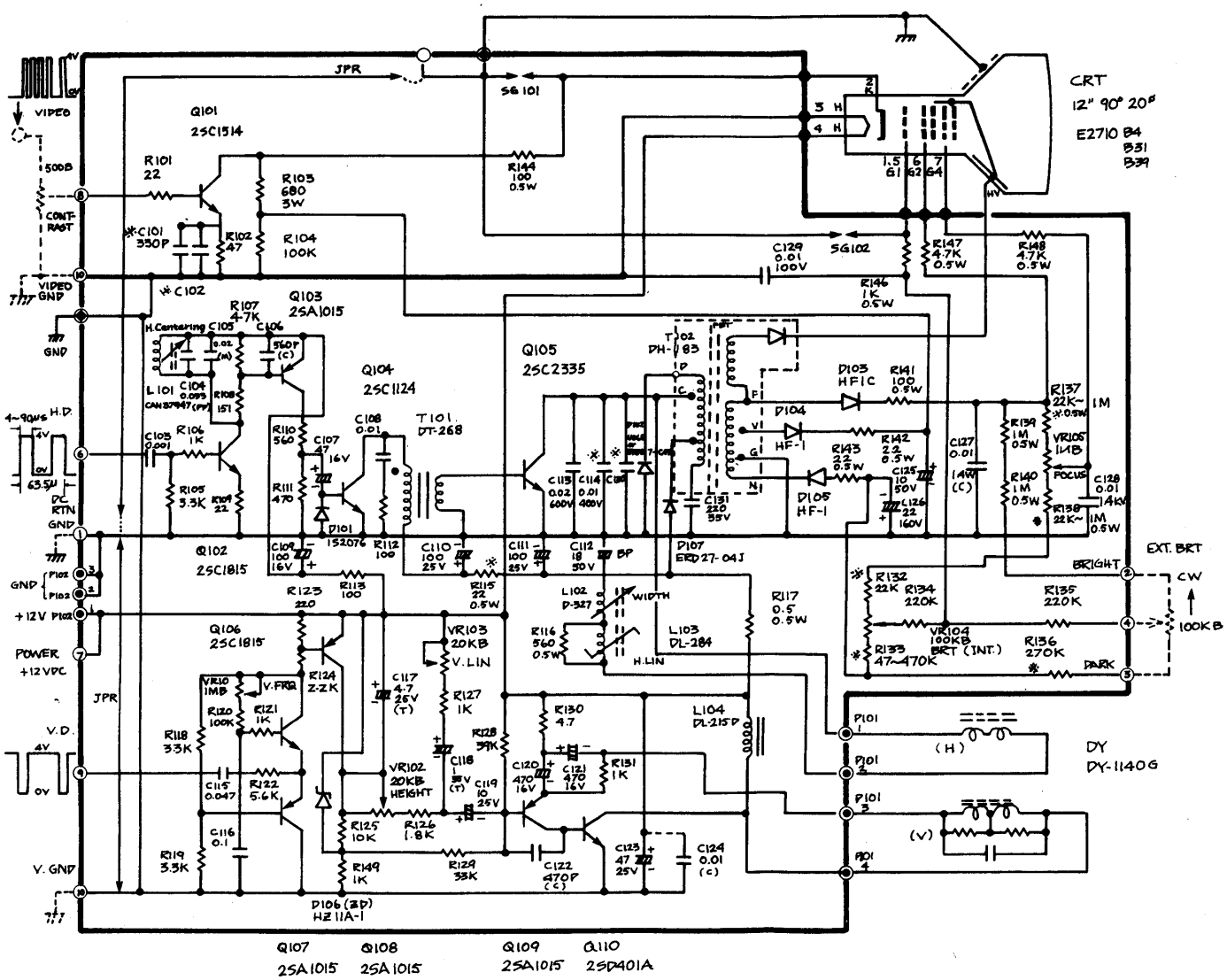

NOTES
- ○ INTERFACE CONNECTOR
- ◉ PIN CONNECTOR
- ◈ 1 PIN
- ● DIRECT
- ✱ ADJUSTED

CIQ-12 AND 9
12VDC VERSION
CIRCUIT DIAGRAM

Schematic No. 542-299

APPENDIX D

POWER/MATE CORP. POWER SUPPLIES

PARTS LISTS AND SCHEMATIC

TABLE OF CONTENTS

TITLE/MODEL NO.	DRAWING NO.	REV.	PAGE NO.
Power Supplies ES-F Series	ES-5F/ES-12F Ampex No. 570-570 and 570-554 Ref. LM 1464325		D-1
Schematic	ES-F Ampex No. 1386294		D-5

POWER/MATE CORP.
514 S. River Street, Hackensack, NJ 07601
Phone: (201) 440-3100 TWX: (701) 990-5023

POWER SUPPLY APPLICATION AND MAINTENANCE DATA
ES-F Series

SPECIFICATIONS

AC Input: 85-to-132 or 170-to-264VAC, at 47-440Hz.

DC Output: See voltage and current rating chart.

DC Output Adjustment: ± 10 percent.

Regulation: Line, ±0.1 percent, +1mV within the specified AC limits. Load, ±0.1 percent, +1mV from no-load to full-load conditions.

Noise and Ripple: 50mV peak-to-peak maximum, 20Hz to 20MHz.

Efficiency: 70-to-80 percent.

Transient Response: Recovery to 1.0 percent in 300 microseconds for a 50-to-100 percent load change.

Remote or Local Sensing: A provision is included for improved overall regulation.

Overload and Short-Circuit Protection: Solid-state short-circuit protection is a standard feature. An automatic current-limiting circuit limits the output current which provides protection for the load and supply. Units cannot be damaged by prolonged short circuits.

Overshoot: No voltage spikes on turn-on, turn-off, or during power failure.

Logic Inhibit Function: A 4.5 to 5.5. VDC command signal, referenced to the negative terminal, (I+, I−) will inhibit the DC output. It may be used for control, squencing, or maintenance.

Over-Voltage Protection: Built-in, fixed.

Energy-Storage Time: The output voltage will remain within the regulation range for a minimum of 16 ms after the loss of AC power (from nominal line voltage).

Polarity: Positive, negative, or floating up to 300VDC.

Soft Start: Provides input current limiting at turn on.

Parallel Operation: Units may be paralleled for increased output current. Consult the factory for the proper procedures.

Long-Term Stability: 0.1 percent for 8 hours after a 20 minute warm up.

Ambient Operating Temperature: Continuous duty from 0 to +71°C, full rating from 0 to +50°C. Derate linearly to 60 percent of full rating at +71°C.

Storage Temperature: −55°C to +85°C.

Quality Control: In accordance with MIL-I-45208.

OPERATING INSTRUCTIONS

AC INPUT

Normally, the unit is shipped for operation at an input of 115VAC. If a 230VAC input is desired, the selection is made on the PC board with a plug-in jumper. The jumper between the three input voltage-selection terminals A, B, and C (on the interior of the board behind the AC terminals) may be removed from between terminals A and B (115VAC) and placed across terminals A and C (230VAC) as shown in Fig. 1.

SENSING TERMINALS

For local sensing the supply can be used as delivered. For remote sensing, connect the load to the DC output terminals. Then wire the (+) and (−) sensing terminals respectively across the load. This permits sensing directly at the load. See Fig.2.

VOLTAGE AND CURRENT ADJUSTMENTS

The voltage adjustment (VR2) is a precision multi-turn potentiometer which is accessible from the terminal end of the unit. The current adjustment potentiometer is factory set and no further adjustment is required.

COVERS

Covers for the ES units are included.

Power/Mate power supplies are designed for convection cooling, therefore, it's important not to impede the air flow across or through the power supply's case. Impeding the flow of air through your power supply may shorten its life. If there is doubt about the convection air flow through your Power/Mate supply's heat generating components, it's recommended that you use a small fan to insure satisfactory air flow.

CAUTION: High-voltage circuits present an electrical shock hazard Do no handle the unit while it is operating.

ES-F Series

MODEL	VOLTAGE	CURRENT
ES-5F	5 VOLTS	20 AMPS
ES-12F	12 VOLTS	10 AMPS
ES-15F	15 VOLTS	8 AMPS
ES-24F	24 VOLTS	5 AMPS
ES-28F	28 VOLTS	4 AMPS
ES-36F	36 VOLTS	3 AMPS

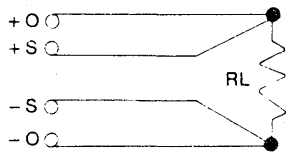

FIG. 2

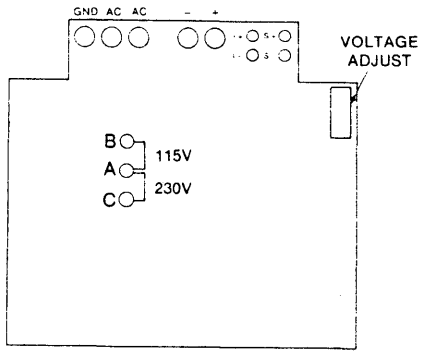

FIG. 1

ELECTRICAL PARTS LIST
ES-F-Series

SCH. REF.	PARTS #	5	12	15	24	28	36	DESCRIPTION
C1,9	CD147100	2	2	2	2	2	2	CAP. 470 PFD, 1KV
C2	CD182100	1	1	1	1	1	1	CAP. 820 PFD, 500V
C3	CT247500	1	1	1	1	1	1	CAP. 4.7 MFD, 35V
C4,13	CE211200	2	2	2	2	2	2	CAP. 210 MFD, 200V
C5,8	CD310200	2	2	2	2	2	2	CAP. 0.001 MFD, 500V
C6	CP447300	1	1	1	1	1	1	CAP. 0.047 MFD, 250V
C7	CP410300	1	1	1	1	1	1	CAP. 0.01 MFD, 250V
C10	CT915600	1	1	1	1	1	1	CAP. 15 MFD, 20V
C11,27	CP410400	2	2	2	2	2	2	CAP. 0.1 MFD, 200V
C12,14-16,18,19	CD310400	6	6	6	6	6	6	CAP. 0.01 MFD, 1KV
C17	CD133200	1	1	1	1	1	1	CAP. 0.0033 MFD, 1.6KV
C20,21	CE133263	2						CAP. 3300 MFD, 16V
C20,21	CE222025		2	2				CAP. 2200 MFD, 25V
C20,21	CE102063				2	2	2	CAP. 1000 MFD, 50V
C25	CD322500	1	1	1	1	1	1	CAP. 2.2 MFD, 25V
C26	CP247400	1	1	1	1	1	1	CAP. 0.47 MFD, 250V
C28	CE102063	1	1	1	1	1	1	CAP. 1000 MFD, 50V
CR1-6,17	DR065000	7	7	7	7	7	7	DIODE 1N4936
CR7	DR075000	1	1	1	1	1	1	BRIDGE 400
CR8,9	DR074000	2						DIODE 30A, 45V
CR8,9	DR076000		2	2	2	2	2	DIODE 1N3891
CR10-14	DR003000	5	5	5	5	5	5	DIODE 1 AMP, 200V
CR15	WI221000	1	1	1		1		22 GA BUSSBAR
CR15	DZ209000				1			DIODE 1N4744A
CR15	DZ210000						1	DIODE 1N4751A
CR16	DS064000	1	1	1	1	1	1	SCR 3A
CR19	DR042000	1	1	1	1	1	1	DIODE 1N4148
CR20	DZ203500	1						DIODE 500 MW, 5.6V
CR20	DZ238000		1					DIODE 1N4743
CR20	DZ214000			1				DIODE 1N4746A
CR20	DZ208000				1		1	DIODE 1N4743A
CR20	DZ210000					1		DIODE 1N4751A
CR21	WI221000	1	1	1	1	1	1	22 GA BUSSBAR
F1	WI341000	1	1	1	1	1	1	34 GA BUSS WIRE
L1	TA2890600	1	1	1	1	1	1	IND
L2	TA2884801	1						IND
L2	TA2884802		1					IND
L2	TA2884803			1				IND
L2	TA2884804				1			IND
L2	TA2884805					1		IND
L2	TA2884806						1	IND
Q1,2	QS048000	2	2	2	2	2	2	XTOR 2N2905A
Q3,4	QP001800	2	2	2	2	2	2	XTOR 66709
R1,2,13,28,29	RC210100	5	5	5	5	5	5	RES 100 OHMS, ½W, 10%
R3,4	RC206800	2	2	2	2	2	2	RES 6.8 OHMS, ½W, 5%
R5,6	RC222000	2	2	2	2	2	2	RES 22 OHMS, ½W, 10%
R7	RE210200	1	1	1	1	1	1	RES 1K OHMS, 10%
R8	RC324902	1	1	1	1	1	1	RES 24.9K OHMS, ½W, 1%
R9	RC346402	1	1	1	1	1	1	RES 46.4K OHMS, ½W, 1%
R10	RC310003	1	1	1	1	1	1	RES 100K OHMS, ½W, 1%
R11,14	RC210400	2	2	2	2	2	2	RES 100K OHMS, ½W, 10%
R12	RC315100	1						RES 150 OHMS, ½W, 1%
R12	RC247000		1					RES 47 OHMS, ½W, 10%

ELECTRICAL PARTS LIST
ES-F-Series

SCH. REF.	PARTS #	5	12	15	24	28	36	DESCRIPTION
R12	RC215000			1	1	1		RES 15 OHMS, ½W, 10%
R12	RC206800						1	RES 6.8 OHMS, ½W, 5%
R15	RC334800	1						RES 3.48K OHMS, ½W,
R15,27	RC315002		2					RES 15K OHMS, ½W, 1%
R15	RC321502			1				RES 21.5K OHMS, ½W,
R15	RC335700				1			RES 35.7K OHMS, ½W,
R15	RC343202					1		RES 43.2K OHMS, ½W,
R15	RC359000						1	RES 59K OHMS, ½W, 1%
R16	RC351101	1	1	1	1	1	1	RES 5.11K OHMS, ½W,
R17	RC227400	1		1	1	1	1	RES 270K OHMS, ½W, 1
R17	RC247400		1					RES 470K OHMS, ½W, 1
R18,19	RC310200	2	2	2	2	2	2	RES 1K OHMS, ½W, 1%
R20	RE222000	1						RES 22 OHMS, 5%
R20	RE212100		1					RES 120 OHMS, 10%
R20	RC247000			1				RES 47 OHMS, ½W, 10%
R20	RF239100				1			RES 390 OHMS, 3W, 5%
R20	RE247100					1		RES 470 OHMS, 2W, 5%
R20	RE210200						1	RES 1K OHMS, 10%
R21,22	RC212400	2	2	2	2	2	2	RES 120K OHMS, ½W, 1
R23	RF247000	1	1	1	1	1	1	RES 47 OHMS, 3W, 5%
R24,25	RE203000	2						RES 3 OHMS, 5%
R24,25	RE210000		2	2				RES 10 OHMS, 10%
R24,25	RE215000				2	2		RES 15 OHMS, 5%
R24,25	RF222000						2	RES 22 OHMS, 5%
R27	RC610300	1						RES 10K OHMS, ½W, 1%
R27	RC335700			1				RES 35.7K OHMS, ½W,
R27	RC327402				1		1	RES 27.4K OHMS, ½W,
R27	RC321502					1		RES 21.5K OHMS, ½W,
R30	RC247000	1						RES 47 OHMS, ½W, 10%
R30	RC220100		1	1	1	1	1	RES 200 OHMS, ½W, 5%
R31	RC215100	1	1	1	1	1	1	RES 150 OHMS, ½W, 10
R32	RC222100	1	1	1	1	1	1	RES 220 OHMS, ½W, 10
R34	RC210400	1						RES 100K OHMS, ½W, 1
R34	RC222400		1					RES 220K OHMS, ½W, 1
R34	RC227400			1				RES 270K OHMS, ½W, 1
R34	RC247400				1			RES 470K OHMS, ½W, 1
R34	RC256400					1		RES 560K OHMS, ½W, 1
R34	RC268400						1	RES 680K OHMS, ½W, 1
R35,36	RC220100	2	2	2	2	2	2	RES 200 OHMS, ½W, 5%
R38	PF705020	1						POT. 5K OHMS
R38	PF701030		1	1				POT. 10K OHMS
R38	PF702030				1	1	1	POT. 20K OHMS
R39	PF850100	1	1	1	1	1	1	POT. 500 OHMS
T1,2	TA3031000	2	2	2	2	2	2	TRANSFORMER
T3	TA2884901	1						TRANSFORMER
T3	TA2884902		1					TRANSFORMER
T3	TA2884903			1				TRANSFORMER
T3	TA2884904				1			TRANSFORMER
T3	TA2884905					1		TRANSFORMER
T3	TA2884906						1	TRANSFORMER
T4	TA2884600	1	1	1	1	1	1	TRANSFORMER
TH1	MI351700	1	1	1	1	1	1	THERMISTOR
U1	QI026600	1	1	1	1	1	1	IC UPC1042C
U2	QI026400	1	1	1	1	1	1	

8 | 7 | 6 | 5 | 4 | 3 | 2 | DISTR CODE: 5-

NOTES : UNLESS OTHERWISE SPECIFIED

1. RESISTANCE VALUES ARE IN OHMS, 1/2W, 10%.
2. CAPACITANCE ARE IN MICROFARADS.
3. INDUCTANCE VALUES ARE IN MICROHENRIES.
4. NPN TRANSISTORS ARE MPS6514.
5. PNP TRANSISTORS ARE MPS6518.
6. FOR VALUES SEE COMPONENT CHART.

REFERENCE DESIGNATIONS	
LAST USED	NOT USED
C28	C22,23,24
CR21	CR18,21
F1	
L2	
Q4	
R38	R26,33,37
RT1	
T4	
U2	

COMPONENT CHART		
	5V	12V
C20,21	3300	2200
CR8,9	30 A 45V	IN3891
CR15	——	IN758
CR20	500MW 5.6V	IN749
L2		
R12	150	47
R15	3.48K	15K
R17	270K	470K
R20	22	120
R24 R25	3	10
R27	10K	15K
R30	47	200
R34	100K	220K
R38	5K	10X
T3		

IC LIST												
REFERENC DESIGNATION	VENDOR P/N	AMPEX P/N	GND PIN			POWER PINS						
			A	D	E	+5VA	+5VD	-5V	+12VA	+12VD	-12VA	-12VD
U1												
U2												

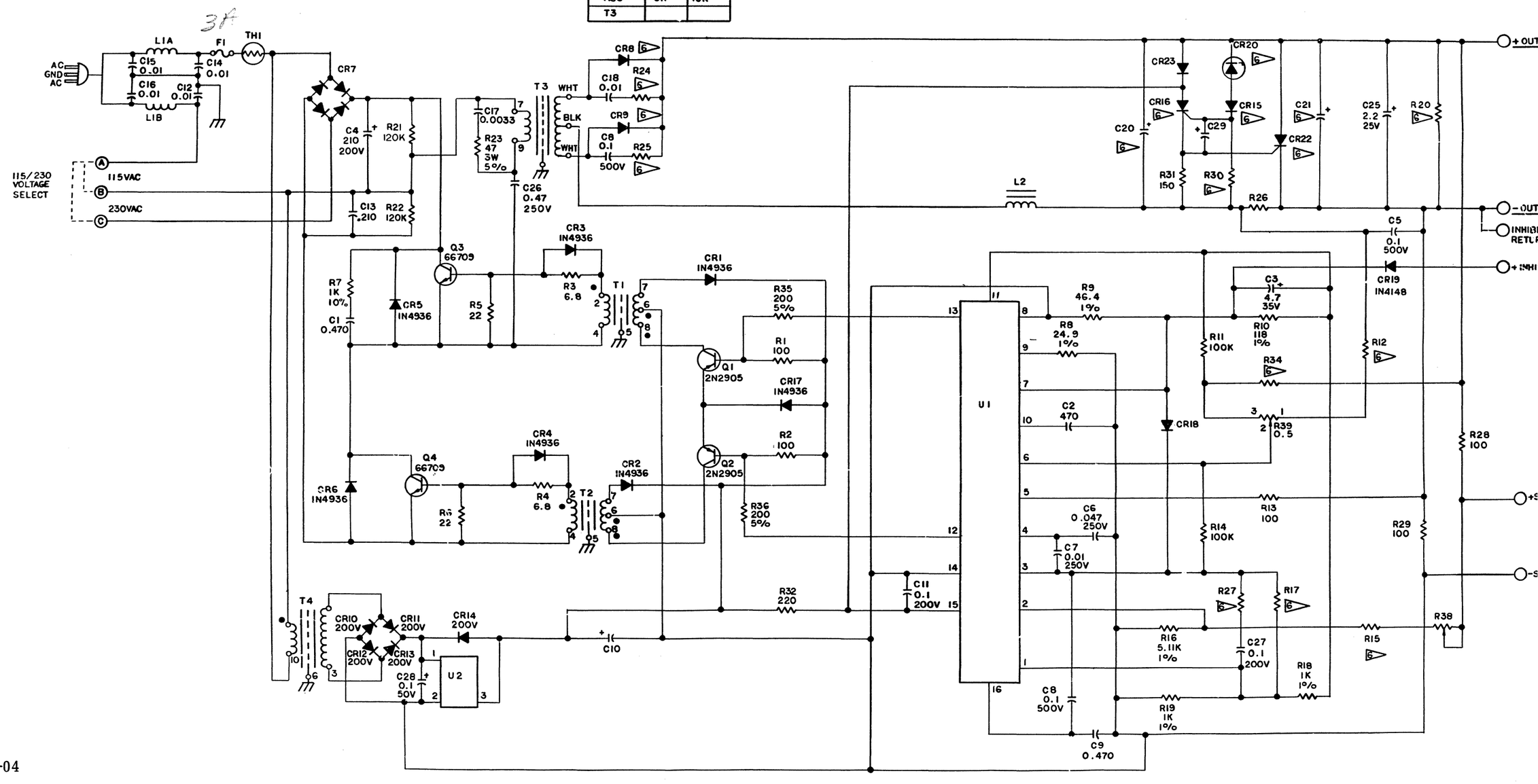

Ampex 1809623-04

6 5 4 3 2 1

DISTR CODE: 5-9

1386294

REFERENCE DESIGNATIONS	
LAST USED	NOT USED
C28	C22,23,24
CR21	CR18,21
F1	
L2	
Q4	
R38	R26,33,37
RT1	
T4	
U2	

COMPONENT CHART		
	5V	12V
C20,21	3300	2200
CR8,9	30 A 45V	IN3891
CR15	——	IN758
CR20	500MW 5.6V	IN749
L2		
R12	150	47
R15	3.48K	15K
R17	270K	470K
R20	22	120
R24 R25	3	10
R27	10K	15K
R30	47	200
R34	100K	220K
R38	5K	10K
T3		

IC LIST												
REFERENC DESIGNATION	VENDOR P/N	AMPEX P/N	GND PIN			POWER PINS						
			A	D	E	+5VA	+5VD	-5V	+12VA	+12VD	-12VA	-12VD
U1												
U2												

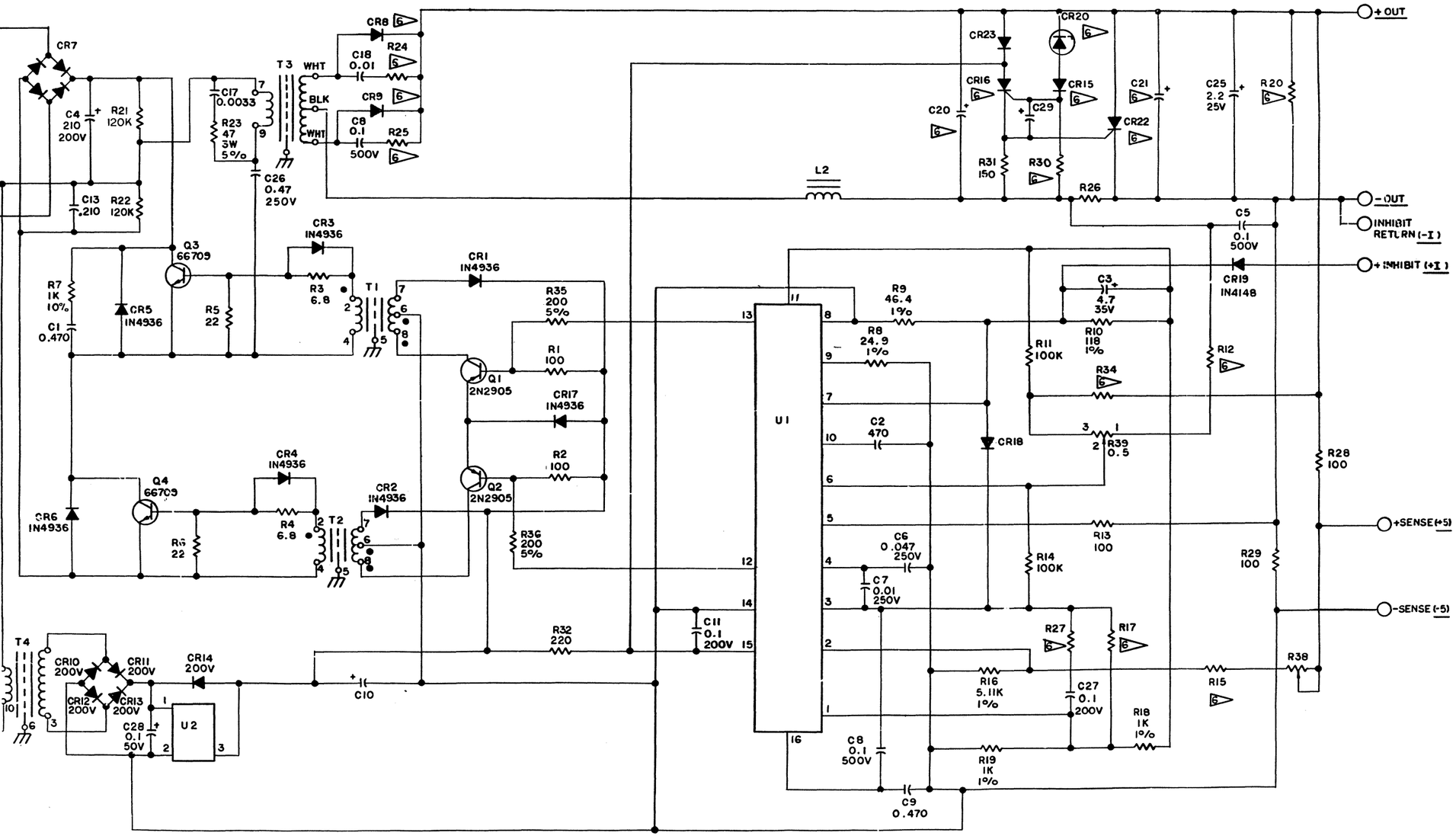

Schematic No. 1386294—.
5V/12V Power Supply
REF. 570-570/570-554

APPENDIX E

POWERTEC, INC. POWER SUPPLY

PARTS LISTS AND SCHEMATIC

TABLE OF CONTENTS

TITLE/MODEL NO.	DRAWING NO.	REV.	PAGE NO.
Power Supply 9K5-200-17	070-23610-001	H	E-1
	070-23614-001	H	E-3
	075-23610-001		E-5
	075-23614-001	F	E-6
	080-23601-001	C	E-8
	085-23605-002		E-9
	085-23609-001	G	E-10
	085-23611-001	E	E-11
	085-23614-001	H	E-13
	085-23616-001		E-14
	085-23627-001	E	E-15
	094-23999-001	G	E-16
	Ampex No. 570-584 Ref. LM 1420361		
Schematic	007-23630-002	E	E-17

ASSEMBLY NO. 070-23610-001 REV. H

CODE-IDENT

P A R T S L I S T

PROJECT 001
POWERTEC, INC.

ITEM NO	I D	D PLS	PART NUMBER AND INDENTURE	REV LTR	QUANTITY PER ASSY	UM	EFFECT FROM	THRU	DOC CDE	CODE IDENT	LD TM	DESCRIPTION	DRAWING OR SPEC NUMBER	REMARKS	FIND NO
010	0	PL	070-23610-001	H	1.	EA				MA		PCB W/COMP		A1	
020	1	PL	040-23845-001	B	1.	EA				MA		BIAS XFMR		T1	2
021	1	PL	075-23610-001	D	1.	EA				MA		PCB HDW AUTO		A1	1
*030	1	PL	085-23611-001	E	1.	EA				MA		EMI FILTER ASSY		FL1	3
050	1		063-23206-001		1.	EA				BY		FUSE 2 A 115V		F3	
070	1		032-13006-034		2.	EA				BY		CAP 1000MF/50V		C3,4	
080	1		031-23638-001		1.	EA				BY		CAP 1MF/400V		C5	
090	1		032-13006-015		2.	EA				BY		CAP 47MF/10V		C6,7	
110	1		030-19626-006		1.	EA				BY		CAP .0033MF/1KV		C9	
120	1		024-13014-029		1.	EA				BY		RS 22 BWH 2W		R1	
130	1		020-13024-119		2.	EA				BY		RS 82K 1W 5%		R2,3	
150	1		023-19665-001		1.	EA				BY		POT-VARI 2K .75W 10%		R7	
160	1		060-23230-012		2.	EA				BY		CONNECTOR, EDGE MT		J2,3	24
170	1		060-19149-001		1.	EA				BY		CONNECTOR, FM6 PIN		J1	
180	1		051-13196-003		4.	EA				BI		SCREW, 6X1/4 PAN, PH		FN27	
200	1		052-13298-020		.REF							WIRE, BUSS #20		W1	
210	1		052-13298-014		.REF							WIRE, BUSS #14		W3,W5	
220	1		052-15157-009		.REF							WIRE, HK-UP #20 GRY			
230	1		052-15157-007		.REF							WIRE, HK-UP #20 BLU			
240	1		052-15157-006		.REF							WIRE, HK-UP #20 GRN			
250	1		052-15157-008		.REF							WIRE, HK-UP #20 VIO			
260	1		052-15157-004		.REF							WIRE, HK-UP #20 ORN			
270	1		052-15157-002		.REF							WIRE, HK-UP #20 BRN			

*** CONTINUED-ON-NEXT-PAGE ***

ASSEMBLY NO. 070-23610-001 REV. H P A R T S L I S T PROJECT 001 PAGE NO. 2
CODE-IDENT POWERTEC, INC. DATE 08/29/83

ITEM NO	I D	D PLS	PART NUMBER AND INDENTURE	REV LTR	QUANTITY PER ASSY	UM	EFFECT FROM	THRU	DOC CODE	CODE IDENT	LD TM	DESCRIPTION	DRAWING OR SPEC NUMBER	REMARKS	FIND NO
280	1		052-19628-014		.REF							TUBING, TEFLON #14			
290	1		051-13175-001		.REF							TIE, WRAP			
310	1		051-13195-003		2.	EA			BI			SCREW 4-40 X 1/4 PH		FN26	
330	1		052-15149-001		.REF							THERMAL COMPOUND		FN35	
340	1	PL	040-23840-001	B	1.	EA			MA			CHOKE COM.MODE		L1	12
350	1		051-13195-011		1.	EA			BI			SCREW #4X3/4"		FN36	
360	1		051-13214-005		1.	EA			BI			NUT #4			
370	1		051-24167-001		2.	EA			BI			WASHER FIBRE		FN38	
380	1		051-13199-001		2.	EA			BI			WASHER #4 FLAT		FN39	
400	1		030-19626-005		1.	EA			BY			CAP .0022/1KV		C8	
410	1		030-19626-010		1.	EA			BY			CAP .0047/1KV		C10	
420	1		022-19159-005		1.	EA			BY			RS 30 25W		RX	5
999	1		EN- 023029REV H		.REF										

ASSEMBLY NO. 070-23614-001 REV. H

CODE-IDENT

P A R T S L I S T

PROJECT 001
POWERTEC, INC.

ITEM NO	I D	D PLS	PART NUMBER AND INDENTURE	REV LTR	QUANTITY PER ASSY	UM	EFFECT FROM	THRU	DOC CODE CDE	IDENT	LD TM	DESCRIPTION	DRAWING OR SPEC NUMBER	REMARKS	FIND NO
*010	0	PL	070-23614-001	H	1.	EA			MA			PCB W/COMP CONT CD		EN023435	
*020	1	PL	075-23614-001	F	1.	EA			MA			PCB HDW AUTO		A2	
*023	1	FL	040-23617-001	B	1.	EA			MA			DRIVE XFMR		T1	
*030	1		013-16047-002		1.	EA			BY			SCR		SCR1	
*040	1		014-23641-001		1.	EA			BY			I.C. TL494C PWM		U1	
*050	1		014-23108-008		1.	EA			BY			I.C. MC3423 P1 OVP		U2	
*060	1		010-19572-001		2.	EA			BY			TS MJE 182		Q5,6	
*070	1		010-13020-002		1.	EA			BY			TS 2N2907A		Q8	
*080	1		010-13019-002		1.	EA			BY			TS 2N2222A		Q9	
*090	1		030-19575-001		1.	EA			BY			CAP .1/500V		C1	
*100	1		030-19635-004		5.	EA			BY			CAP 1.0 MF 50V		C2-5,10	
*110	1		030-19626-003		1.	EA			BY			CAP 470 PF 500V		C6	
*120	1		030-19635-009		6.	EA			BY			CAP .1MF		C7,11,23-26	
*130	1		032-13006-008		1.	EA			BY			CAP 100MF 10V		C8	
*140	1		030-19626-004		2.	EA			BY			CAP .001MF 1KV		C9,12	
*150	1		030-13152-008		1.	EA			BY			CAP 220 PF, 200V		C17	
*160	1		030-13152-004		2.	EA			BY			CAP .001MF CK05		C14,16	
*170	1		032-13006-011		1.	EA			BY			CAP 10MF 35V		C13	
*180	1		032-13006-010		1.	EA			BY			CAP 4.7MF 15V		C15	
*190	1		030-13152-002		2.	EA			BY			CAP .01MF CK06		C20,22	
*200	1		030-13152-007		1.	EA			BY			CAP .047MF CK05		C19	
*210	1		030-13152-006		1.	EA			BY			CAP .022MF CK06		C18	
*220	1		030-13152-003		1.	EA			BY			CAP .1MF CK06		C21	

*** CONTINUED-ON-NEXT-PAGE ***

ASSEMBLY NO. 070-23614-001 REV. H P A R T S L I S T PROJECT 001 PAGE NO. 2
CODE-IDENT POWERTEC, INC. DATE 10/14/83

ITEM NO	I D	D PLS	PART NUMBER AND INDENTURE	REV LTR	QUANTITY PER ASSY	UM	EFFECT FROM	THRU	DOC CODE CDE	CODE IDENT	LD TM	DESCRIPTION	DRAWING OR SPEC NUMBER	REMARKS	FIND NO
*290	1		024-13014-001		1.	EA			BY			RS 0.1 BWH 2W		R13	
*330	1		030-19635-003		2.	EA			BY			CAP .22MF		C27,28	
*340	1		024-13014-044		1.	EA			BY			RS 390 BWH 2W		R20	
*370	1		024-13014-045		2.	EA			BY			RS 470 OHMS BWH 2W		R16,17	
*410	1		023-22794-006		1.	EA			BY			POT 5K VARIABLE		R24	
*550	1		023-22794-004		1.	EA			BY			POT 1K TRIMMER		R44	
*620	1		010-13018-002		1.	EA			BY			TS 2N2219A		Q10	
*650	1		051-16773-008		1.	EA			BY			IC SOCKET, 8 PIN DIP			
*660	1		051-16773-016		1.	EA			BY			IC SOCKET,16 PIN DIP			
*670	1		060-22445-018		2.	EA			BY			EDGE MT CONNECTOR		J2,3	
*690	1		051-13223-001		1.	EA			BI			TS PAD		Q10	
*720	1	PL	040-23834-001	B	1.	EA			MA			CURRENT XFMR		T2	
*730	1		052-15138-020		2.	FT			BI			WIRE HOOK-UP #22 WHT			
*740	1		051-13192-011		8.	EA			BI			SCREW FH #6-32X3/4"			
*750	1		011-16059-001		1.	EA			BI			DD 1N4448		CR29	
*760	1		020-23786-001		2.	EA			BI			RS 1.0 .5W 5%		R1,4	
*770	1		020-13004-073		2.	EA			BI			RS 1K .5W 5%		R46,47	

SSEMBLY NO. 075-23610-001 REV. P A R T S L I S T PROJECT 001 PAGE NO.
ODE-IDENT POWERTEC, INC. DATE 11/29/8

TEM NO	I D	D PLS	PART NUMBER AND INDENTURE	REV LTR	QUANTITY PER ASSY	UM	EFFECT FROM	THRU	DOC CODE CDE	CODE IDENT	LD TM	DESCRIPTION	DRAWING OR SPEC NUMBER	REMARKS	FIND NO
010	0	PL	075-23610-001		1.	EA			MA			PCB HDWR AUTO		A1	
020	1		075-23610-101		1.	EA			BY			PCB		A1	1
030	1		051-15142-003		8.	EA			BI			STANDOFF 6-32 X .188			3
040	1		051-15142-002		4.	EA			BI			STANDOFF 6-32 X .125			2
050	1		051-15148-001		3.	EA			BI			STANDOFF 6-32 X .188			4
060	1		050-23684-001		4.	EA			BY			STANDOFF .375			5
070	1		051-15143-007		1.	EA			BI			STANDOFF 4-40X.093			6
080	1		011-13009-001		8.	EA			BI			DIODE 1N4002		CR1-6,8,9	
090	1		020-13022-025		4.	EA			DI			RS 10 .25W 5%		R5,6,10,11	
999	1		EN- 022164REV D		.REF										

ASSEMBLY NO. 075-23614-001 REV. F P A R T S L I S T PROJECT 001 PAGE NO.
CODE-IDENT POWERTEC, INC. DATE 08/29/8

ITEM NO	I D	D PLS	PART NUMBER AND INDENTURE	REV LTR	QUANTITY PER ASSY	UM	EFFECT FROM	THRU	DOC CODE CDE	IDENT	LD TM	DESCRIPTION	DRAWING OR SPEC NUMBER	REMARKS	FIND NO
*010	0	PL	075-23614-001	F	1.	EA			MA			PCB HDW AUTO A2		EN023232	
*020	1		075-23614-101		1.	EA			BY			PCB		A2	1
*030	1		051-15146-001		8.	EA			BI			EYELET			5
*040	1		051-15142-002		8.	EA			BI			STANDOFF 6-32 X .125			4
*050	1		051-15142-003		2.	EA			BI			STANDOFF 6-32 X .188			3
*230	1		011-16058-001		10.	EA			BI			DIODE 1N4936A		CR1,5,6,10	
*231	1		011-16058-001		.REF							DIODE 1N4936A		CR16,17,21	
*232	1		011-16058-001		.REF							DIODE 1N4936A		CR11,12,22	
*240	1		011-13009-001		17.	EA			BI			DIODE 1N4002		CR2-4,7-9	
*241	1		011-13009-001		.REF							DIODE 1N4002		CR18-20,30	
*242	1		011-13009-001		.REF							DIODE 1N4002		CR13-15,31	
*243	1		011-13009-001		.REF							DIODE 1N4002		CR23-25	
*250	1		011-16059-001		6.	EA			BI			DIODE 1N4448		CR26-28	
*251	1		011-16059-001		.REF							DIODE 1N4448		CR32-34	
*260	1		020-23786-001		2.	EA			BI			RS 1.0 .5W 5% C/C		R8,11	
*270	1		020-13022-089		4.	EA			BI			RS 4.7K .25W 5%		R2,5,9,12	
*271	1		020-13022-089		.REF							RS 4.7K .25W 5%		CRT	
*280	1		020-13022-049		4.	EA			BI			RS 100,.25W 5% C/C		R3,6,7,10	
*300	1		020-13004-059		2.	EA			BI			RS 270 .5W 5%		R14,23	
*310	1		020-13004-057		2.	EA			BI			RS 220 .5W 5%		R15,18	
*350	1		020-13004-013		1.	EA			BI			RS 3.3 .5W 5%		R22	
*360	1		012-13013-022		1.	EA			BI			DIODE ZENER 1N4749A		VR1-CRT	
*380	1		020-13004-091		2.	EA			BI			RS 5.6K .5W 5%		R19,33	

*** CONTINUED-ON-NEXT-PAGE ***

ASSEMBLY NO. 075-23614-001 REV. F

CODE-IDENT

P A R T S L I S T

PROJECT 001
POWERTEC, INC.

PAGE NO.
DATE 08/29/8

ITEM NO	I D	D PLS	PART NUMBER AND INDENTURE	REV LTR	QUANTITY PER ASSY	UM	EFFECT FROM	THRU	DOC CODE CDE	IDENT	LD TM	DESCRIPTION	DRAWING OR SPEC NUMBER	REMARKS	FIND NO
*390	1		020-13004-012		1.	EA			BI			RS 3 OHMS .5W5%		R21-CRT	
*400	1		020-13004-049		1.	EA			BI			RS 100 OHMS .5W 5%		R26-CRT	
*420	1		020-13004-077		1.	EA			BI			RS 1.5K .5W 5%		R39-CRT	
*430	1		021-22660-334		1.	EA			BI			RS 29.4K .5W 1%		R27-CRT	
*440	1		020-13004-129		1.	EA			BI			RS 220K .5W 5%		R28-CRT	
*450	1		021-22660-210		1.	EA			BI			RS 1.5K MF .5W 1%		R43-CRT	
*460	1		020-13004-127		1.	EA			BI			RS 180K .5W 5%		R30-CRT	
*470	1		020-13004-097		4.	EA			BI			RS 10K .5W 5%		R31,40,45	
*471	1		020-13004-097		.REF							RS 10K .5W 5%		R32	
*500	1		021-22660-235		3.	EA			BI			RS 2.74K MF .5W 1%		R35,37,38	
*510	1		020-13004-107		1.	EA			BI			RS 27K .5W 5%		R36-CRT	
*520	1		020-13004-056		1.	EA			BI			RS 200 OHMS .5W 5%		R42-CRT	
*530	1		020-13004-130		1.	EA			BI			RS 240K .5W 5%		R41-CRT	
*560	1		020-13004-073		1.	EA			BI			RS 1K .5W 5%		R50	
*570	1		020-13004-082		3.	EA			BI			RS 2.4K .5W 5%		R25,48,51	
*580	1		020-13004-042		1.	EA			BI			RS 51 OHMS .5W 5%		R49-CRT	
*600	1		020-13022-056		1.	EA			BI			RS 200 OHMS .25W 5%		R52-CRT	
*610	1		020-13004-119		1.	EA			BI			RS 82K 0.5W 5%		R34-CRT	
*700	1		020-13022-063		1.	EA			BI			RS 390 OHMS 1/4W 5%		R53-CRT	
*750	1		020-13022-080		1.	EA			BI			RS 2K .5W 5%		R54-CRT	

ASSEMBLY NO. 080-23601-001 REV. C P A R T S L I S T PROJECT 001 PAGE NO. 1
CODE-IDENT POWERTEC, INC. DATE 07/28/83

ITEM NO	I D	D PLS	PART NUMBER AND INDENTURE	REV LTR	QUANTITY PER ASSY	UM	EFFECT FROM	THRU	COD CDE	CODE IDENT	LT TM	DESCRIPTION	DRAWING OR SPEC NUMBER	REMARKS	FIND NO
010	0	PL	080-23601-001	C	1.	EA			MA			9K5-200-17			
020	1	PL	085-23609-001	G	1.	EA			MA			PCB MOTHERBOARD ASSY		A1	
025	1		002-23815-001		.REF							HOOK-UP INSTRUCTIONS			
030	1		050-23604-001		1.	EA			BY			REAR PANEL			
040	1		050-23602-001		1.	EA			BY			TOP COVER			
050	1		050-23607-001		1.	EA			MCH			INSULATOR, SIDE			
060	1		050-23695-002		1.	EA			MCH			COVER, SAFETY INS			
070	1		051-19590-003		2.	EA			BI			SCREW, #6-32 X 1/4"			
080	1		051-13192-003		14.	EA			BI			SCREW, 6-32 X 1/4"			
090	1		050-23696-001		1.	EA			MCH			BUS BAR INS			
110	1		050-23814-001		1.	EA			MCH			CONNECTOR STRAP			
120	1		051-15158-003		1.	EA			BI			JUMPER STRAP			
130	1		007-23630-002		.REF							SCHEMATIC			
140	1		005-19009-201		.REF							TEST DATA			
999	1		EN- 022359REV C		.REF										

ASSEMBLY NO. 085-23605-002 REV. P A R T S L I S T PROJECT 001 PAGE NO.
CODE-IDENT POWERTEC, INC. DATE 07/06/

ITEM NO	I D / PLS	PART NUMBER AND INDENTURE	REV LTR	QUANTITY PER ASSY	UM	EFFECT FROM	THRU	DOC CODE	CODE IDENT	LD TM	DESCRIPTION	DRAWING OR SPEC NUMBER	REMARKS	FIN NO
010	0 PL	085-23605-002		1.	EA				MA		FRONT PANEL ASSY.			
021	1	061-19144-003		1.	EA				BY		GUARD, FAN			
022	1	050-23605-002		1.	EA				BY		FRONT PANEL			
030	1	060-19574-002		2.	EA				BY		BARRIER STRIP 3 CKT			
040	1	051-13269-003		4.	EA				BI		SCREW,ST #8-32			
050	1	051-15158-004		4.	EA				BI		CLIP, RETAINING			
060	1	051-19153-003		1.	EA				BI		GROMMET RUBBER			
070	1	051-13215-002		4.	EA				BI		NUT-KEPS #6-32			
080	1	051-13215-005		1.	EA				BI		NUT-KEPS #6-32 SP			
*090	1	061-16782-008		1.	EA				BY		FAN			
100	1	051-13191-003		1.	EA				BI		SCREW #6 1/4 PAN PH			
110	1	051-13192-003		1.	EA				BI		SCREW #6 1/4 FLAT PH			
120	1	051-13229-002		1.	EA				BI		LUG SOLDER			
130	1	051-13229-005		1.	EA				BI		LUG SOLDER			
140	1	052-15157-002		.REF							WIRE #20 BRN			
150	1	052-13298-020		.REF							WIRE BUS #20			
160	1	031-24121-001		3.	EA				BY		CAP .0047UF/250V			
170	1	052-19618-022		.REF							SLEEVING TEFLON #2			
*999	1	EN- 021689REV D		.REF										

ASSEMBLY NO. 085-23609-001 REV. G

CODE-IDENT

P A R T S L I S T

PROJECT 001
POWERTEC, INC.

PAGE NO.
DATE 07/28/8

ITEM NO	I D	D PLS	PART NUMBER AND INDENTURE	REV LTR	QUANTITY PER ASSY	UM	EFFECT FROM	THRU	COD CDE	CODE IDENT	LT TM	DESCRIPTION	DRAWING OR SPEC NUMBER	REMARKS	FIND NO
010	0	PL	085-23609-001	G	1.	EA			MA			PCB MOTHERBOARD ASSY			
020	1	PL	070-23610-001	H	1.	EA			MA			PCB W/COMP		A1	
030	1	PL	085-23616-001	F	1.	EA			MA			DIODE H/S ASSY			
040	1	PL	085-23605-002	D	1.	EA			MA			FRONT PANEL ASSY		FP	
050	1	PL	085-23614-001	E	1.	EA			MA			HEATSINK SUB ASSY		A2	
060	1		050-23603-001		1.	EA			BY			COVER, BOTTOM			
070	1		050-23606-001		1.	EA			MCH			INS, BOTTOM			
080	1		050-23685-001		1.	EA			MCH			INS, A-1 AIR FLOW			
090	1		050-23608-001		1.	EA			MCH			INS, FRONT PANEL			
110	1		051-13222-008		4.	EA			BI			WASHER, SHOULDER			
120	1		051-13226-003		2.	EA			BI			WASHER FLAT 5/16			
130	1		051-13200-006		2.	EA			BI			WASHER SPLIT LOCK			
140	1		051-22851-002		4.	EA			BI			NUT HEX 5/16" #18			
160	1		051-13269-005		3.	EA			BI			SCREW THRD FORM #6			
170	1		051-13192-003		14.	EA			BI			SCREW #6 1/4 FLAT PH			
180	1		051-13175-005		1.	EA			BI			TIEWRAP			
190	1		051-13175-001		.REF							TIEWRAP			
210	1		041-15121-011		.REF							TAPE MYLAR			
230	1		041-23454-002		2.	EA			BY			CORE TOROID			
240	1		032-13035-055		2.	EA			BY			CAP 3400MF/200V		C1,2	
250	1		051-13198-007		4.	EA			BI			SCREW 10-32X1/2PH			
260	1		050-23727-001		2.	EA			BY			FOAM PIECE INPUT CAP			
999	1		EN- 022447REV G		.REF										

ASSEMBLY NO. 085-23611-001 REV. E

CODE-IDENT

P A R T S L I S T

PROJECT 001
POWERTEC, INC.

ITEM NO	I D	D PLS	PART NUMBER AND INDENTURE	REV LTR	QUANTITY PER ASSY	UM	EFFECT FROM	THRU	DOC CDE	CODE IDENT	LD TM	DESCRIPTION	DRAWING OR SPEC NUMBER	REMARKS	FIND NO
*010	0	PL	085-23611-001	E	1.	EA			MA			EMI FILTER ASSY		EN023231	
*020	1	PL	050-23611-001	B	1.	EA			MD			INPUT BRACKET			
*030	1		013-23637-001		1.	EA			BY			TRIAC			
*040	1		011-16044-012		1.	EA			BY			DIODE BRIDGE			
*050	1		051-19153-003		1.	EA			BI			GROMMET			
*060	1		022-13164-002		1.	EA			BY			RS 12 12W 5%			
*070	1		030-19634-002		1.	EA			BY			CAP .01 MF 3KV			
*080	1		031-13005-004		1.	EA			BY			CAP .022MF 100V			
*090	1		063-19148-014		1.	EA			BY			FUSE 10A 250V			
*100	1		063-19148-017		1.	EA			BY			FUSE 20A 250V			
*110	1		063-19148-019		1.	EA			BY			FUSE 25A 125V			
*120	1		063-13047-005		3.	EA			BY			FUSE HOLDER			
*130	1		051-13196-003		3.	EA			BI			SCREW 6-32X1/4 PAN			
*150	1		051-13196-023		1.	EA			BI			SCREW, #6X2" PAN, PH			
*170	1		051-13215-005		2.	EA			BI			NUT KEPS #6-32 SM			
*180	1		051-13215-002		1.	EA			BI			NUT-KEPS 6-32			
*190	1		051-22845-001		2.	EA			BI			BUSHING SHOULDER #6			
*200	1		051-13199-002		1.	EA			BI			WASHER, FLAT #6			
*210	1		052-15157-004		.REF							WIRE: 20GA ORN			
*220	1		052-15157-002		.REF							WIRE: 20GA BRN			
*230	1		052-15157-006		.REF							WIRE: 20GA GRN			
*240	1		052-15157-007		.REF							WIRE: 20GA BLUE			
*250	1		052-15157-030		.REF							WIRE: 16GA BLK			

*** CONTINUED-ON-NEXT-PAGE ***

ASSEMBLY NO. 085-23611-001 REV. E P A R T S L I S T PROJECT 001 PAGE NO. 2
CODE-IDENT POWERTEC, INC. DATE 08/29/83

ITEM NO	I D	D PLS	PART NUMBER AND INDENTURE	REV LTR	QUANTITY PER ASSY	UM	EFFECT FROM	THRU	DOC CDE	CODE IDENT	LD TM	DESCRIPTION	DRAWING OR SPEC NUMBER	REMARKS	FIND NO
*260	1		052-15157-032		.REF							WIRE: 16GA RED			
*270	1		052-15157-031		.REF							WIRE: 16GA BRN			
*280	1		052-15157-038		.REF							WIRE: 16GA GRAY			
*300	1		052-15157-042		.REF							WIRE: 14GA RED			
*320	1		052-15157-049		.REF							WIRE: 14GA WHT			
*330	1		052-13298-016		.REF							WIRE: BUSS 16GA			
*340	1		052-19618-016		.REF							TUBING, TEFLON #16			
*350	1		052-15149-001		.REF							THERMAL COMPOUND			
*360	1		069-19643-004		.REF							RTV 102			
*370	1		052-19618-022		.REF							TUBING TEFLON #22			
*380	1		052-19652-002		.REF							SLEEVING			

ASSEMBLY NO. 085-23614-001 REV. P A R T S L I S T PROJECT 001 PAGE NO.
CODE-IDENT POWERTEC, INC. DATE 05/14/

ITEM NO	I D	D PLS	PART NUMBER AND INDENTURE	REV LTR	QUANTITY PER ASSY	UM	EFFECT FROM	THRU	DOC CODE	CODE IDENT	LD TM	DESCRIPTION	DRAWING OR SPEC NUMBER	REMARKS	FIN NO
010	0	PL	085-23614-001		1.	EA				MA		HEATSINK SUB-ASSY A2			
020	1	PL	070-23614-001		1.	EA				MA		PCB W/COMP		A2	
030	1		050-23615-001		1.	EA				BY		HEATSINK TS			
040	1		010-19658-003		4.	EA				BY		TS POWER			
050	1		063-15155-007		1.	EA				BY		THERMOSTAT 100 C			
070	1		010-23613-001		1.	EA				BY		TIP 31B TS			
080	1	PI	050-23846-001		1.	EA				MD		HEATSINK TO-220			
110	1		051-13195-004		1.	EA				BI		SCREW 4-40 X 5/16			
120	1		051-13215-005		8.	EA				BI		KEPNUT 6-32 SM. PAT.			
140	1		050-23640-001		1.	EA				BY		INS TS H/S			
150	1		051-13249-009		4.	EA				BI		INS TO-3 TS			
170	1		051-13278-001		4.	EA				BI		INS-SPACER TO-3 TS			
190	1		051-13199-001		1.	EA				BI		WASHER 4-40			
210	1		052-15149-001		.REF							THERMAL COMPOUND			
220	1		051-23849-001		4.	EA				BI		STANDOFF #6 NYLON			
*230	1		051-19605-001		4.	EA				BY		SCREW NYLON #6X1/4"			
270	1		051-13269-006		2.	EA				BI		SCREW #4 SELF-TAP			
999	1		EN- 021196REV E		.REF										

ASSEMBLY NO. 085-23616-001 REV. P A R T S L I S T PROJECT 001 PAGE NO.
CODE-IDENT POWERTEC, INC. DATE 06/01/

ITEM NO	I D	D PLS	PART NUMBER AND INDENTURE	REV LTR	QUANTITY PER ASSY	UM	EFFECT FROM	THRU	DOC CDE	CODE IDENT	LD TM	DESCRIPTION	DRAWING OR SPEC NUMBER	REMARKS	FIN NO
010	0	PL	085-23616-001		1.	EA			MA			DIODE H/S ASSY			
020	1	PL	085-23627-001		1.	EA			MA			BUS BAR SUB-ASSY			
030	1	PL	040-23618-001		1.	EA			MA			XFMR, OUTPUT		T1	
040	1	PL	040-23620-001		1.	EA			MA			CHOKE, OUTPUT		L1	
050	1		011-16056-003		4.	EA			BY			SHOTTKY DD 45V 75A		CR1,2,3,4	
060	1		063-15155-007		1.	EA			BY			THERMOSTAT		TS-1	
*070	1		020-13004-017		2.	EA			BI			RS 4.7 .5W 5% C/C		R2,3	
080	1		031-13005-004		2.	EA			BY			CAP .022MF/100V		C2,3	
090	1		050-23616-001		1.	EA			BY			DIODE H/S			
100	1		050-23623-001		1.	EA			MCH			XFMR BRACKET			
110	1		051-13269-003		4.	EA			BI			SCREW #8 SELF-TAP			
120	1		051-13269-001		3.	EA			BI			SCREW, #6 SELF-TAP			
150	1		051-13269-006		2.	EA			BI			SCREW #4 SELF TAP			
160	1		051-13198-004		2.	EA			BI			SCREW #10 X 5/16			
170	1		051-13194-005		2.	EA			BI			SCREW #10 X 3/8			
180	1		051-19580-006		2.	EA			BI			WASHER #10 INT.			
190	1		052-15157-004		.REF							WIRE HK-UP #20 ORN			
210	1		050-23676-001		1.	EA			MCH			BUS BAR, XFMR			
220	1		052-15149-001		.REF							THERM. COMPOUND			
230	1		051-13215-004		1.	EA			BI			NUT KEPS #10			
240	1		051-13225-002		4.	EA			BI			NUT HEX #1/4-28			
250	1		051-13199-008		4.	EA			BI			WASHER FLAT #1/4			
*999	1		EN- 021616REV F		.REF										

ASSEMBLY NO. 085-23627-001 REV. E P A R T S L I S T PROJECT 001 PAGE NO.
CODE-IDENT POWERTEC, INC. DATE 08/29/8

ITEM NO	I D	D PLS	PART NUMBER AND INDENTURE	REV LTR	QUANTITY PER ASSY	UM	EFFECT FROM	EFFECT THRU	DOC CDE	CODE IDENT	LD TM	DESCRIPTION	DRAWING OR SPEC NUMBER	REMARKS	FIND NO
*010	0	PL	085-23627-001	E	1.	EA				MA		BUS BAR SUB-ASSY		EN023260	
*022	1	PL	050-23678-001	A	1.	EA				MD		BUS BAR EXT NEG			
*023	1	PL	050-23679-001	A	1.	EA				MD		BUS BAR EXT POS			
*024	1		050-23677-001		1.	EA				MCH		BUS BAR INS			
*040	1		032-23683-001		3.	EA				BY		CAP CGO 15000MF/7.5V		C1-3	
*050	1		051-13194-006		4.	EA				BI		SCREW 10-32 X 7/16			
*070	1		051-13198-005		2.	EA				BI		SCREW 10-32 X 3/8			
*080	1		051-13193-004		2.	EA				BI		SCREW 8-32 X 5/16			
*090	1		051-19580-006		2.	EA				BI		WASHER #10			
*100	1		051-13215-005		4.	EA				BI		KEPNUT #6 SML PTRN			
*110	1		051-13229-002		3.	EA				BI		LUG #6			
*120	1		030-19635-004		3.	EA				BY		CAP, 1 MF, 50V		C4-6	
*130	1		052-19618-018		.REF							TUBING TEFLON #18			
*150	1		051-13229-005		1.	EA				BI		LUG #6			
*160	1		051-13194-004		1.	EA				BI		SCREW 10-32 X 5/16			
*170	1		052-15157-003		.REF							WIRE HOOK-UP #20 RED			
*180	1		052-15157-001		.REF							WIRE HOOK-UP #20 BLK			
*190	1		050-23625-001		1.	EA				BY		BUS BAR NEG			
*200	1		050-23626-001		1.	EA				BY		BUS BAR POS			
*210	1		041-23833-001		2.	EA				BY		BUS BAR CHOKE		FN6	
*220	1		041-15121-009		.REF							TAPE MYLAR			
*230	1		052-19618-022		.REF							TUBING TEFLON #22			
*240	1		069-19643-001		.REF							GLUE EPOXY BOND			
*250	1		030-19575-001		3.	EA				BY		CAP .1UF/500V			

ASSEMBLY NO. 094-23999-001 REV. C P A R T S L I S T PROJECT 001 PAGE NO. 1
CODE-IDENT POWERTEC, INC. DATE 07/28/83

ITEM NO	I D	D PLS	PART NUMBER AND INDENTURE	REV LTR	QUANTITY PER ASSY	UM	EFFECT FROM	THRU	COD CDE	CODE IDENT	LT TM	DESCRIPTION	DRAWING OR SPEC NUMBER	REMARKS	FIND NO
010	0	PL	094-23999-001	C	1.	EA			MA			CONNECTOR ASSY			
020	1		051-13251-045		2.	EA			BI			LUG SOLDERLESS			1
030	1		060-19150-005		2.	EA			BY			MALE TERM CONN NYL			2
040	1		052-15157-003		.290	FT			BI			HK-UP WIRE RED #20GA			3
050	1		052-15157-001		.210	FT			BI			HK-UP WIRE BLK #20GA			4
060	1		060-19149-002		1.	EA			BY			CONNECTOR NYLON			5
999	1		EN- 022190REV C		.REF										

The information and designs contained herein are the exclusive property of POWERTEC INC., and use thereof without the express and written consent of POWERTEC INC. is prohibited.

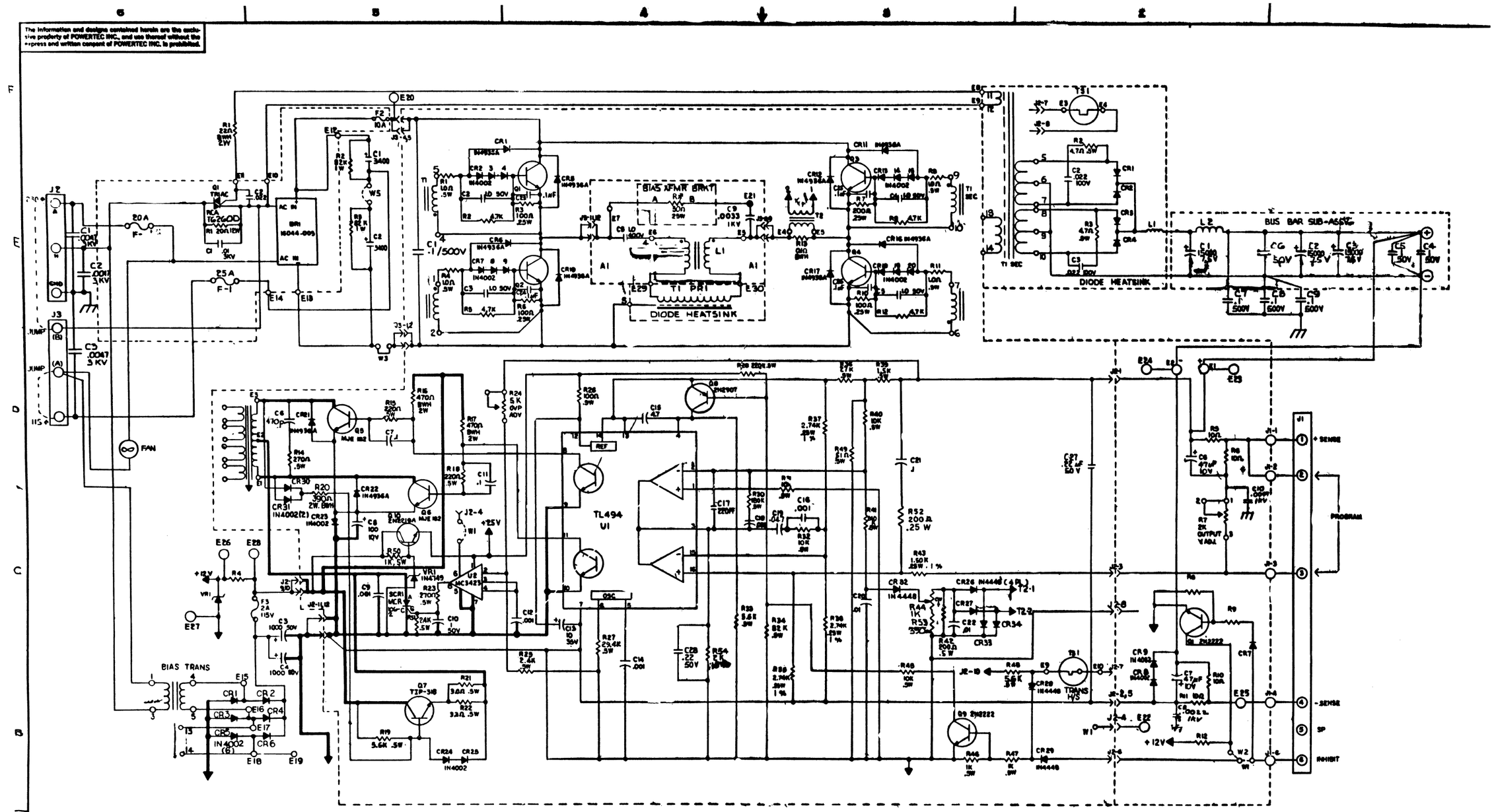

LAST USED COMPONENTS
A1- C10, CR9, R12
A2- C38, CR38, R54, Q10, T2

4 Q1, Q2, Q3 AND Q4 ARE 2N6675, POWERTEC #010-19658-003.
3 CR1, CR2, CR3 AND CR4 ARE UNITRODE #USD545 OR EQUIV, POWERTEC # 011-16056-003
2 ALL CAPACITORS ARE IN MICROFARADS.
1 ALL RESISTORS ARE IN OHMS, 5%, ¼ W.
NOTE: UNLESS OTHERWISE SPECIFIED

APPD	A. [illegible]	1-31-81	POWERTEC INC.
CHECK	[illegible]	1-31-81	20550 NORDHOFF ST., CHATSWORTH, CALIF., 91311
DRAWN	[illegible]	JAN. 29 81	TITLE SCHEMATIC (115V/230V) 9K
MATERIAL			
FINISH			SIZE D · CODE IDENT NO 24429 · DRAWING NUMBER 007-23630-002 · REV E

Schematic No. 570-584

AMPEX

READER COMMENTS

Your comments concerning this publication are important to us. Please take the time to complete this questionnaire and return it to Ampex.

Title of Publication: _____

Catalog Number: _____

Describe your likes/dislikes concerning this document:

Technical Information: _____

Supporting Diagrams/Pictures: _____

Ease of Use: _____

Your Name: _____

Company and Address: _____

Your Position/Department: _____

NO POSTAGE
NECESSARY
IF MAILED
IN THE
UNITED STATES

BUSINESS REPLY MAIL

FIRST CLASS PERMIT NO. 168 REDWOOD CITY, CA

Ampex Corporation
AVSD Technical Publications
401 Broadway, M.S. 2-04
Redwood City, CA 94063

AMPEX

]6852

PRINTED IN USA